TM 11-2760

WAR DEPARTMENT TECHNICAL MANUAL

INSTALLATION OF RADIO AND INTERPHONE EQUIPMENT

IN CARRIAGE, MOTOR 155-MM GUN M40 (T83) AND CARRIAGE, MOTOR 8-INCH HOWITZER M43 (T89)

WAR DEPARTMENT • MAY 1947

WAR DEPARTMENT TECHNICAL MANUAL

TM 11-2760

INSTALLATION OF RADIO AND INTERPHONE EQUIPMENT

IN CARRIAGE, MOTOR 155-MM GUN M40 (T83) AND CARRIAGE, MOTOR 8-INCH HOWITZER M43 (T89)

WAR DEPARTMENT *MAY 1947*

United States Government Printing Office
Washington : 1947

WAR DEPARTMENT
WASHINGTON 25, D. C., 13 May 1947

TM 11-2760, Installation of Radio and Interphone Equipment in Carriage, Motor, 155-mm Gun M40 (T83), and Carriage, Motor, 8-inch Howitzer M43 (T89), is published for the information and guidance of all concerned.

[AG 300.7 (7 Feb 47)]

BY ORDER OF THE SECRETARY OF WAR:

DWIGHT D. EISENHOWER
Chief of Staff

OFFICIAL:
EDWARD F. WITSELL
Major General
The Adjutant General

DISTRIBUTION:
AAF (10); AGF (5); T (5); Dept (2); Base Comd (2); AAF Maj Comd (15); Arm & Sv Bd (1); AGF Bd (ea Sv Test Sec) (1); Tech Sv (2); FC (2); Class III Instls (3); PE (10); Dep 11(5) except Holabird (21), Sacramento (17); Tng Ctr (2); 4th & 5th Ech Maint Shops 11(2); A (ZI) (20), Overseas (5); CHQ (2); Two (2) copies to each of the following T/O & E's: 2-1; 2-2; 2-28; 3-267; 5-412; 5-416; 6-167; 6-437; 6-457; 6-465; 6-467; 6-497; 7-14; 7-19; 9-500; 11-7; 11-15; 11-95; 11-107; 11-127; 11-500; 11-587; 11-597; 17-2; 18-27; 19-500; 20-12S; 55-37.

For explanation of distribution formula, see TM 38-405.

CONTENTS

SECTION I
GENERAL

1. Purpose

This manual provides methods and procedures, based upon actual field experience, for the installation of radio and interphone equipment in Carriage, Motor, 155-mm Gun M40 (T83) and in Carriage, Motor, 8-inch Howitzer M43 (T89). Items required to make a complete operating installation are listed for each set.

2. Symbols and References

a. NOMENCLATURE SYMBOLS. Whenever nomenclature symbols are used in this manual, an explanation of the symbols is given in the first paragraph of the section covering the items of equipment. (For a complete listing of nomenclature symbols, see TB SIG 103.)

b. WAR DEPARTMENT PUBLICATIONS. A list of pertinent War Department publications is given in the first paragraph of the section covering an item of equipment.

3. Holes and Brackets

Brackets required for installation of the radio sets are drilled and installed prior to delivery of Carriage, Motor, 155-mm Gun M40 (T83) and Carriage, Motor, 8-inch Howitzer M43 (T89). If other holes and brackets are required, drilling instructions will be given in this manual. Do not relocate any holes or brackets unless absolutely necessary.

4. Preliminary Check

Study the illustrations, the installation methods outlined, and any changes that may be published to this manual.

Caution: Carriage, Motor, 155-mm Gun M40 (T83) and Carriage, Motor, 8-inch Howitzer M43 (T89) have 24-volt electrical systems. Before installation, make sure that the radio sets are designed for 24-volt operation, otherwise tubes may burn out or dynamotors may be damaged.

5. Operating Check

Carefully study the pertinent technical manuals before trying to operate the radio sets. Make a thorough operating check to determine that the equipment is properly installed and in working order.

SECTION II

IGNITION NOISE SUPPRESSION IN CARRIAGE, MOTOR, 155-MM GUN M40 (T83) AND CARRIAGE, MOTOR, 8-INCH HOWITZER M43 (T89)

6. General

Excessive ignition or other electrical noises will interfere with the operation of radio equipment in Carriage, Motor, 155-mm Gun M40 (T83) and Carriage, Motor, 8-inch Howitzer M43 (T89). Refer to TM 9-747 for information on the noise suppression system in the vehicle. For additional information on the suppression of noise in vehicles, refer to TM 11-483. Also study the operating instructions for the radio sets.

7. Procedure

a. TESTING FOR SOURCE OF NOISE. To determine the source of electrical noises in the vehicle, proceed as follows:

(1) As a source of test signals, use a radio set of the same type as that in the vehicle.

(2) Operate the test set at a distance from the vehicle, so that signals received at the vehicle are as weak as possible without loss of distinctness.

(3) Use headphones for reception. Set the gain control of the vehicle radio receiver to maximum.

(4) Start the vehicle motor and run it at about 1,500 to 1,800 revolutions per minute (rpm).

Caution: Do not race the motor. Excessive racing will damage the motor.

(5) At each of the frequencies used for communication, check the reception of weak signals from the test radio set.

(6) With the vehicle receiver tuned to the frequency at which the noise level is highest, turn off the ignition switch. Noise caused by the ignition system will disappear when the switch is turned off; noise caused by the voltage regulator or the battery-charging generator will continue until the motor stops.

(7) Repeat step (6) above at each of the frequencies used for communication.

(8) Auxiliary equipment, such as gages (oil, fuel, and temperature), fans, and motors should be turned on and off (or disconnected) individually to locate noise caused by them. The table below will be helpful in distinguishing noises from static, etc.

Interference	Usual source
Popping: regular clicks corresponding to ignition firing; stops when motor is turned off; accelerates when motor speed is increased.	Ignition system.
Intermittent clicks: continuing several seconds after the ignition system is turned off	Generator regulator.
Whine: varies with speed of motor; ceases when motor comes to a complete stop	Generator.

(9) A probe antenna (fig. 1) will aid in locating sources of noise interference. Connect the probe antenna to the antenna and ground terminals of the vehicle radio receiver. Place the test radio set so that signals are received on the installed radio set. The signal from the test set is needed to actuate the limiter in the radio set installed in the vehicle. Slowly move the probe antenna close to, *but not in contact with,* the various parts of the vehicle electrical

system. Noise from interference-producing parts will be heard in the receiver headphones.

b. NOISE ELIMINATION. Usually, the interference can be eliminated by cleaning, tightening, or replacing the noise-producing parts.

(1) Examine and tighten all suppressor and shielding components.

(2) Clean and tighten all connections and grounding bonds. Thoroughly clean the contact surfaces between wires and terminals and between metal casings and the frame of the vehicle. Ungrounded metal parts reradiate noise frequencies picked up from other components.

(3) If noise interference persists, check the noise suppressor components by substituting new components.

SECTION III

RADIO SET SCR-610-(*)

8. Nomenclature and References

a. NOMENCLATURE. Official nomenclature followed by (*) is used to indicate all models of the item of equipment included in this section. Thus Radio Set SCR-610-(*) represents Radio Sets SCR-610-A and -B; Case CS-79-(*) represents Cases CS-79-A through -D, -G, through -J, and -M; Handset TS-13-(*) represents Handsets TS-13 and Handsets TS-13-A through -F, -K, and -L; Mounting FT-250-(*) represents Mountings FT-250-A, -B, -C, -H, and -J through -L; Power Supply Unit PE-120-(*) represents Power Supply Units PE-120-A and -B; Radio Receiver and Transmitter BC-659-(*) represents Radio Receivers and Transmitters BC-659-A, -B, -H, and -J through -L; Headset HS-(*) represents Headsets HS-30-A through -H, -J through -L, -R, and -U; and Vibrator VB-11-(*) represents Vibrators VB-11 and VB-11-A.

b. REFERENCES.

TM 9-747	155-MM Gun Motor Carriage T83 and 8-Inch Howitzer Motor Carriage T89.
TM 11-483	Suppression of Radio Noises.
TM 11-615	Radio Sets SCR-609-A and -B and SCR-610-A and -B.

9. Required Parts

Items necessary for installation of Radio Set SCR-610-(*) in Carriage, Motor, 155-MM Gun M40 (T83) and Carriage, Motor, 8-inch Howitzer M43 (T89) are listed below.

Basic unit stock No. 2S610/24

Quantity	Stock No.	Item
1 *	6Q349	Alignment Tool TL-207.
1 *	2A229C	Antenna AN-29-C.
1 *	3B879	Case CS-79-(*).
1	2Z1890-137	Case CS-137.
1	6Z3147	Connector No. 61007 and bondnut BL-50.
2 *	2A2352/1	Fitting, porcelain.
1 *	2B613	Handset TS-13-(*).
2 *	3G1250-64.15	Insulator, porcelain
2 *	3G586	Insulator IN-86.
1 **	2A2081-15	Mast Base AB-15/GR.
1	2Z6721-250	Mounting FT-250-(*).
2 **	2A2416	Mast Section MS-116, including spare.
2 **	2A2417	Mast Section MS-117, including spare.
2 **	2A2418	Mast Section MS-118, including spare.
1	3H4496-120	Power Supply Unit PE-120-(*).
1	2C5379	Radio Receiver and Transmitter BC-659-(*), including crystal units, batteries, and tubes.
1	2Z8056	Roll BG-56-A.
15 ft	6Z7926	Rope RP-5.
2	6Z9019	Strap ST-19.
2	----------	TM 11-615.
1	3H6711	Vibrator VB-11-(*).
27 ft	1B29	Wire W-29, auxiliary antenna.
6 ft	1B128	Wire W-128.

Installation unit stock No. 2S610-V90/50

Quantity	Stock No.	Item
1 ***	4B417-4	Chest Set TD-4.
1	2Z3400-153	Cover BG-153.
1 ***	2B800-16	Headset H-16/U.
1	6L50-610V90	Hardware bag.
2 ****	3G621	Insulator IN-121.
1	2B1645	Microphone T-45.

* These items are not installed, but are stowed in vehicle at discretion of using organization.
** If Mast Base AB-15/GR and Mast Sections MS-116, MS-117, MS-118 are not available, use Mast Base MP-48 or MP-48-A and Mast Sections MS-51, MS-52, and MS-53.
*** If Chest Set TD-4 is not available, use Cords CD-318-B and CD-307-A. If Headset H-16/U is not available, use Headset HS-30-(*) and Cord CD/604.
**** Use only with Mast Base MP-48 or MP-48-A.

10. Assembly and Installation

Locate and install components of Radio Set SCR-610-(*) in Carriage, Motor, 155-mm Gun M40 (T83) and Carriage, Motor, 8-inch Howitzer M43 (T89) as shown in figure 2 and as directed below:

a. MOUNTING FT-250-(*) (fig. 2). Use the hardware provided and secure Mounting FT-250-(*) (item 3) to the bracket installed on the floor of the right sponson in the driving compartment.

b. CASE CS-137. Place the 118 crystal units (issued with Radio Receiver and Transmitter BC-659-(*)) in Case CS-137. Put Case CS-137 in Power Supply Unit PE-210-(*).

c. POWER SUPPLY UNIT PE-120-(*) (fig. 2).
(1) Open Power Supply Unit PE-120-(*) (item 2) and remove the chassis cover.

(2) Place Vibrator VB-11-(*) in its socket.

(3) Make certain that the connector link is in the BC-659 position, that the change-over plug is set for 24 volts, and that all tubes are firmly in their sockets.

(4) Replace the chassis cover and close the lid of the power supply unit.

(5) Secure Power Supply Unit PE-120-(*) to Mounting FT-250-(*) with the hook fasteners provided (fig. 2).

(6) Route the power cord (part of item 2) to the vehicle terminal box.

(7) Install connector No. 61007 and bondnut BL-50 (items 10 and 11) in the knock-out hole. Secure the power cord in the terminal box. Connect the cord terminals to the terminal block in the vehicle terminal box. Observe proper polarity.

(8) With the clamps and hardware supplied (fig. 3) secure the cord to the sponson floor.

d. RADIO RECEIVER AND TRANSMITTER BC-659-(*) (fig. 2). If Battery BA-41 is not installed in Radio Receiver and Transmitter BC-659-(*) (item 1), proceed as follows:

(1) Remove the receiver-transmitter from its case.

(2) Remove the cover of the battery compartment located on the chassis near the front panel.

(3) Place Battery BA-41 in the battery compartment. Be careful to engage the plug into the socket of Battery BA-41.

(4) Replace the cover.

(5) Before putting the chassis in its case, make sure that all the tubes are firmly in their sockets, that the crystals for the desired operating frequencies are in their proper sockets, that the crystal retaining clips are in position, and that the two toggle switches, near the left side of the chassis, are in the ON position.

(6) Place Radio Receiver and Transmitter BC-659-(*) on Power Supply Unit PE-120-(*) (fig. 2) and secure it with the fasteners on the transmitter case.

e. MAST BASE AB-15/GR (figs. 2 and 4). Install Mast Base AB-15/GR (fig. 2, item 5) on the aerial base support (item 19) on the front plate of the right sponson. Proceed as follows:

(1) Disassemble the mast base (fig. 4, view A). Hold the lower insulator (item 7) firmly in one hand and turn the body of Mast Base AB-15/GR counter-clockwise with the other hand.

(2) Place the upper insulator (item 5) over the hole in the aerial base support.

(3) Place the small neoprene washer (item 4) over the upper insulator and put the plain washer (item 3) over the neoprene washer.

(4) Insert the body of Mast Base AB-15/GR through the holes in the plain and neoprene washers, the upper insulator, and the large neoprene washer (item 6).

(5) Insert the bolt of the lower insulator (item 7) into the body of the mast base. The bolt must be inserted from below. Turn the base clockwise until it is securely tightened.

(6) Cut a 36-inch length of Wire W-128. Strip ½ inch of insulation from each end and solder-tin the tips. Solder a terminal lug (fig. 5) to one end of the wire and connect the terminal lug to the antenna binding post on the rear of the receiver-transmitter. Connect the other end of the wire to the binding post on Mast Base AB-15/GR.

Note. When Radio Receiver and Transmitter BC-659-(*) is equipped with Terminal Box TM-218, remove the box cover, set the link for the wire lead-in, and replace the cover. The terminal lug (fig. 5) is not required.

f. MAST SECTIONS MS-116, MS-117, and MS-118 (fig. 2). Screw Mast Sections MS-116, MS-117, and MS-118 (items 8, 7, and 6) together and install the assembled antenna in Mast Base AB-15/GR. When the mast sections are removed, disassemble and stow them in Roll BG-56-A.

g. CASE CS-79-(*). Install Batteries BA-39 and BA-40 in Case CS-79-(*). Stow the case in a convenient place in the vehicle.

h. FITTING AND INSULATOR. Use these items with Rope RP-5 for tying down the antenna. The fitting is designed for use with Mast Section MS-52 and must be reshaped for use with Mast Section MS-117.

i. MAST BASE MP-48 OR MP-48-A WITH MAST SECTIONS MS-51, MS-52, AND MS-53. If standard antenna components are not available, use Mast Base MP-48 or MP-48-A with Mast Sections MS-51, MS-52, and MS-53. Remove the internal lead-in from Mast Base MP-48 or MP-48-A, and install an external lead-in of Wire W-128, as shown in figure 4, view B. The mast base is assembled as shown in figure 4, view B.

SECTION IV
RADIO SET SCR-619

11. Nomenclature and References

a. NOMENCLATURE. Official nomenclature followed by (*) is used to indicate all models of the item of equipment included in this section. Thus Headset HS-30-(*) represents Headsets HS-30-A through -H, -J through -L, -R, and -U.

b. REFERENCES.

TM 9-747	155-MM Gun Motor Carriage T83 and 8-Inch Howitzer Motor Carriage T89.
TM 11-483	Suppression of Radio Noises.
TM 11-619	Radio Set SCR-619.
TM 11-982	Battery Charger PE-219.
TM 11-879	Receiver-Transmitter BC-1335.

12. Required Parts

Items necessary for the installation of Radio Set SCR-619 in Carriage, Motor, 155-mm Gun M40 (T83) and Carriage, Motor, 8-inch Howitzer M43 (T89) are listed below.

Basic unit stock No. 2S619/6-12-24

Quantity	Stock No.	Item
2	2Z299-359	Adapter M-359.
1 *	----------	Adapter, for plywood packboard.
1 *	2A310-199	Bag BG-188, for spare mast sections.
1 *	2Z551-189	Bag BG-189, for headsets, microphones, etc.
1 *	2Z551-190	Bag BG-190, for crystals.
1	3H230-219	Battery Charger PE-219.
9	3B54	Battery BB-54-A.
3	3B380-291	Box CH-291, for batteries.
1 *	2Z1890-137	Case CS-137, for crystals.
1	6Z3147	Connector No. 61007 and bondnut BL-50.
1	1F430-67.108	Cord CG-67/MRQ-2.
3	3E1999-294	Cord CD-1294.
1	2Z3400-192	Cover BG-192.
1	2A2081-15	Mast Base AB-15/GR.
1	2A2088-74	Mast Base MP-74.
6 *	2A2450-21	Mast Section AB-21/GR, including three spares.
2 *	2A2450-22	Mast Section AB-22/GR, including spare.
4 *	2A2450-23	Mast Section AB-23/GR, including two spares.
2 *	2A2450-24	Mast Section AB-24/GR, including spare.
2	2A2416	Mast Section MS-116, including spare.
2	2A2417	Mast Section MS-117, including spare.
2	2A2418	Mast Section MS-118, including spare.
1	2Z6721-506	Mounting FT-506.
1 *	2Z6904	Packboard plywood.
1 *	----------	Power cable kit.
1	2C5395-1335	Radio Receiver and Transmitter BC-1335, including crystal set and vibrators.
1 *	2Z8056	Roll BG-56-A, for mast sections.
2	----------	TM 11-619.
1	2Z9323-72	Terminal Box J-72/GR.
27 ft *	1B29	Wire W-29, auxiliary antenna.

Installation unit stock No. 2S619-V96/50

Quantity	Stock No.	Item
3 **	4B417-4	Chest Set TD-4.
3	3E1999-383-13	Cord CD-1383.
1	6L50-619V96	Hardware bag.
3 ***	2B800-16	Headset H-16/U.
1	2B1617	Microphone T-17.
1	2B1645	Microphone T-45.
2	2B250	Microphone Cover CW-110/U.

* These items are not installed but are stowed in the vehicle at the discretion of the using organization.
** If Chest Set TD-4 is not available, use Cords CD-318-B and CD-307-A.
*** If Headset H-16/U is not available, use Headset HS-30-(*).

13. Assembly and Installation

Locate and install the components of Radio Set SCR-619 in Carriage, Motor, 155-mm Gun M40 (T83) and Carriage, Motor, 8-inch Howitzer M43 (T89) as shown in figure 6 and as directed in the subparagraphs below.

a. MOUNTING FT-506 AND BONDING JUMPER (fig. 6). Secure Mounting FT-506 (item 5) on the bracket in the right sponson (view A). Use the hardware in the hardware bag when securing the mounting on the bracket. Secure one end of the bonding jumper (item 15) with the left rear mounting screw (detail C).

b. BATTERY CHARGER PE-219 (fig. 6). (1) Open the case of Battery Charger PE-219 (item 2) and set the voltage change-over plug to the 24-volt position. Close the case of the battery charger.

(2) Place the battery charger on Mounting FT-506 and secure it with the hook fasteners (view A).

(3) Route the power cord from the battery charger to the vehicle terminal box and secure the cord through the knock-out hole with connector No. 61007 and bondnut BL-50.

(4) Fasten the cord to the sponson floor with clamps. Connect the cord terminals to the terminal block in the vehicle terminal box. Observe proper polarity.

c. RADIO RECEIVER AND TRANSMITTER BC-1335 (fig. 6). Set the voltage selector control on the front panel of Radio Receiver and Transmitter BC-1335 for 6-volt operation. Place the radio receiver and transmitter (item 1) on Battery Charger PE-219 in the position shown in view A. Secure the receiver-transmitter with hook fasteners and connect the bonding jumper to the GND binding post on the rear of Radio Receiver and Transmitter BC-1335.

d. BOX CH-291 AND BATTERY BB-54-A (fig. 6). Open Boxes CH-291 (item 3) and place three Batteries BB-54-A (item 4) in each box. Using the jumpers provided, connect the three batteries in series. Connect the leads from the socket on Box CH-291 to the battery terminals as marked. Install two Boxes CH-291 on Mounting FT-506 (view A). Stow the third box in the vehicle.

e. CORDS CD-1383 (fig. 6). Use Cord CD-1383 (item 11) to interconnect Radio Receiver and Transmitter BC-1335, Battery Charger PE-219, and Boxes CH-291. Loosen the four screws in each connector and *carefully* turn each connector plug to the proper position for connection to the socket. After Cords CD-1383 have been connected, tighten the screws in each connector.

f. MAST BASE AB-15/GR AND TERMINAL BOX J-72/GR (fig. 6). Install Mast Base AB-15/GR (item 7) through the hole in the aerial base support on the front plate of the right sponson (view A). Proceed as follows:

(1) Disassemble the mast base (fig. 4, view A). Hold the lower insulator (fig. 4, item 7) firmly in one hand and turn the body of Mast Base AB-15/GR counterclockwise with the other hand. Remove the ground ring and IT (internal teeth) lockwasher.

Note. If Terminal Box J-72/GR is not equipped with a large IT lockwasher, cut the bond strip and clamp from the IT lockwasher removed in disassembling the mast base. Use the modified lockwasher on Terminal Box J-72/GR.

(2) Place the upper insulator (fig. 4, item 5) over the hole in the aerial base support.

(3) Place the small neoprene washer (fig.

4, item 4) over the upper insulator and put the plain washer (item 3) over the neoprene washer.

(4) Insert the body of Mast Base AB-15/GR through the holes in the plain and neoprene washers, the upper insulator, and the large neoprene washer (item 6). Insert the flange of the lower insulator through the hole in the bracket of Terminal Box J-72/GR (fig. 6, item 8) and in the large IT lockwasher.

(5) Insert the bolt (fig. 4, item 8) into the body of Mast Base AB-15/GR. The bolt must be inserted from below the aerial base support. Turn the base clockwise until it is tightened securely. Tighten the mast base by hand. A *slight* pressure may be applied by a wrench, if necessary.

(6) Connect the short wire lead on Terminal Box J-72/GR to the binding post on the bottom of Mast Base AB-15/GR.

g. ADAPTER M-359 AND CORD CG-67/MRQ-2 (fig. 6). Install Adapter M-359 (item 9) on the socket at the rear of Radio Receiver and Transmitter BC-1335. Connect Cord CG-67/MRQ-2 (item 10) to the adapter and to the socket on Terminal Box J-72/GR. Coil excess cordage and secure it to the spacer on the sponson wall (view A).

h. MAST SECTIONS MS-116, MS-117, AND MS-118 (fig. 6). Screw Mast Sections MS-116, MS-117, and MS-118 (items 14, 13, and 12) together and install the assembled antenna into Mast Base AB-15/GR. When the mast sections are not in use, disassemble and stow them in Roll BG-56-A.

i. COVER BG-192. Place Cover BG-192 over Radio Receiver and Transmitter BC-1335, Boxes CH-291, and Battery Charger PE-219 (view A).

SECTION V
INTERPHONE EQUIPMENT RC-99

14. Nomenclature and References

a. NOMENCLATURE. Official nomenclature followed by (*) is used to indicate all models of the item of equipment included in this section. Thus Headset HS-30-(*) represents Headsets HS-30-A through -H, -J, through -L, -R, and -U; Interphone Control Box BC-606-(*) represents Interphone Control Boxes BC-606-A through -G; Radio Set SCR-610-(*) represents Radio Sets SCR-610-A and -B; and Radio Receiver and Transmitter BC-659-(*) represents Radio Receivers and Transmitters BC-659-A, -B, -H, and -J through -L.

b. REFERENCES.

TM 9-747	155-MM Gun Motor Carriage T83 and 8-Inch Howitzer Motor Carriage T89.
TM 11-702	Interphone Equipment RC-99.

15. Required Parts

Items necessary for installation of Interphone Equipment RC-99 in Carriage, Motor, 155-mm Gun M40 (T83) and Carriage, Motor, 8-inch Howitzer M43 (T89) are listed below.

Basic unit stock No. 2S99/24

Quantity	Stock No.	Item
4	6Z3147	Connector No. 61007 and bondnut BL-50.
2	2C675-739A	Control Box BC-739-A, including Mounting FT-507, connectors, and hardware.
1	2C1738H	Interphone Control Box BC-606-H, including Mounting FT-507, connectors, and hardware.
1	2C1637	Interphone Amplifier BC-667.
2	----------	TM 11-702.

Installation unit stock No. 2S99-V96/50

Quantity	Stock No.	Item
4 *	4B417-4	Chest Set TD-4.
24 ft	3E2213	Cordage CO-213.
1	6L50-99V96	Hardware bag.
4 **	2B800-16	Headset H-16/U.
4	2B1645	Microphone T-45.

* If Chest Set TD-4 is not available, use Cords CD-307-A and CD-318-B.
** If Headset H-16/U is not available, use Headset HS-30-(*) and Cord CD-604.

16. Assembly and Installation

Locate and install the components of Interphone Equipment RC-99 in Carriage, Motor, 155-mm Gun M40 (T83) and Carriage, Motor, 8-inch Howitzer M43 (T89) as shown in figure 7 and as directed below.

a. CORDAGE CO-213 (fig. 7). The approximate lengths of cordage required for connecting interphone equipments are given in view A.

(1) Make a trial installation to determine the exact lengths needed.

(*a*) Wire as much of the equipment as possible before installing it in the vehicle.

(*b*) When Cordage CO-213 (items 7, 8, 9, 10, and 11) has been cut to the proper length, prepare the ends of each length used to con-

nect Interphone Control Box BC-606-H (item 2) and Control Boxes BC-739-A (item 3) in the following manner:

1. Strip back and remove 3½ inches of the outer rubber covering (step 1, fig. 8).

2. Cut both inner and outer shielding back to 1 inch in length. Unweave the shielding braid with a pointed instrument (step 2).

3. Divide inner and outer unwoven shields. Bring the separate shields around from the opposite sides of the cordage and twist them in the form of a pigtail (step 3).

4. Bare 1 inch of the black lead at the point exposed by the separation of the shielding (step 4).

5. Twist the bare portion of the black lead around the pigtail. Solder them together, using a minimum of solder (step 5).

6. Dress leads for connections to terminals. Use the black lead for ground connections (step 6).

(2) Prepare the end of each length of cordage used for connection to Interphone Amplifier BC-667 and the vehicle terminal boxes as instructed in (1) above, but strip 8½ inches of the outer rubber covering and 7½ inches of the inner and outer shielding. Parallel the blue and red leads and the black and brown leads on each end of the cordage lengths connecting to the amplifier. Solder the proper lugs from the terminal box to the leads (fig. 9).

b. INTERPHONE CONTROL BOX BC-606-H AND CONTROL BOXES BC-739-A (fig. 7). The proper hole in each control box for cordage entrances is indicated in figure 7. Remove the plates sweated over these holes and proceed as follows:

(1) Disassemble the connectors and place a rubber washer over the stem of each connector and in the holes.

(2) Insert a prepared length of Cordage CO-213 through the hole and connect the cordage leads to the terminal strip (fig. 9).

(3) Remove the patching cords from the commander's Control Box BC-739-A (fig. 7, item 3) and place the ends of a short length of patching cord in the connectors. Tighten connectors so that the control box will be waterproof.

(4) Secure Mountings FT-507 (item 4, supplied with boxes) to the interphone brackets provided in the vehicle. The locations are shown in figure 7.

(5) Place Interphone Control Box BC-606-H (item 2) for the right gunner in Mounting FT-507, located on brackets provided at the rear of the vehicle on the right wall. Refer to figure 7, view D for 155-mm Gun M40 (T83), and to view F for 6-inch Howitzer M43 (T89). Secure Interphone Control Box BC-606-H with the studs and hexagonal nuts provided with the box.

(6) Place Control Box BC-739-A (item 3) (for commander and left gunner) in Mounting FT-507 and the left-wall bracket of the vehicle.

(7) Place Control Box BC-739-A (for driver and co-driver) in Mounting FT-507 on the ceiling bracket of the driving compartment (view A). Secure the control box in Mounting FT-507 with the studs and hexagonal nuts supplied. Route the patch cords and secure with cordage clamps as shown in figure 2. Insert Plugs PL-55 and PL-68 into the jacks on the front panel of Radio Receiver and Transmitter BC-659-(*) or BC-1335.

(8) When Control Box BC-739 and Interphone Control Box BC-606-(*) are used Mounting FT-507 is not supplied. Secure the boxes directly to the interphone brackets. The box wiring is shown in figure 9.

c. INTERPHONE AMPLIFIER BC-667 (fig. 7).

(1) Remove the chassis of Interphone Amplifier BC-667 (item 1) from its cabinet.

(2) Remove the knock-out (22 in view B), place a rubber washer over the stem of connector No. 61007, and install the connector in the knock-out hole.

(3) Insert a prepared length of Cordage CO-213 (item 11) through the connectors. Connect the leads of Cordage CO-213 to the terminal strip in the cabinet (fig. 9).

(4) Secure the cabinet on the bracket in the right sponson of the vehicle.

(5) Route Cordage CO-213 to the terminal box. Remove the knock-out. Secure the cord with connector No. 61007 and bondnut BL-50 and the reducing washer (view B).

(6) Refer to figure 9 for wiring of interphone equipment.

(7) Place Tubes JAN-6V6 in the sockets on the amplifier chassis and in the spare socket of the cabinet.

(8) Place the chassis of Amplifier BC-667 in the cabinet and secure it by replacing and tightening the original screws in the panel.

d. HOOKS AND CLIPS. Secure hooks (fig. 10 and item 12, fig. 7) and clips (fig. 7, item 13) to the spacers provided in the vehicle. The proper locations are shown in figure 7, views A, C, D, E, and F. Use the hardware supplied.

17. Operation Check

In this installation, the commander and the co-driver, through their Control Boxes BC-739-A, may control Radio Set SCR-610-(*) or Radio Set SCR-619 used in conjunction with this interphone system. Check the operation of the interphone equipment as follows:

a. Place OFF-ON switch of Interphone Amplifier BC-667 to ON. Wait 30 seconds for the tube filaments to warm up.

b. Connect the commander's and co-driver's Chest Sets TD-4 by inserting Plugs PL-55 and PL-68 into the jacks marked COMMAND on Control Boxes BC-739-A.

c. Connect the driver's and left gunner's chest sets by inserting the plugs into the other jacks on the control boxes.

d. Connect the right gunner's chest set by inserting the plugs into the jacks on Interphone Control Box BC-606-H. Since, in this vehicle, no tone signal is used, it is not necessary to operate the RADIO-INT switch on Interphone Control Box BC-606-H or BC-606-(*).

e. Turn the volume controls of all the boxes to maximum, then reset them approximately one-quarter turn from maximum.

f. Turn on Radio Receiver and Transmitter BC-659-(*) or Radio Receiver and Transmitter BC-1335 by turning the volume control clockwise.

g. Turn RADIO-INT switch on Control Boxes BC-739-A to RADIO position.

h. Check to see that the commander and co-driver can modulate the radio set. A rushing noise from the receiver should be heard in the headphones. When the microphone switch is pressed, this rushing noise should stop.

i. Speak into the microphone. Sidetone should be heard in the headsets.

j. Set RADIO-INT switch on Control Boxes BC-739-A to INT position.

k. Check communication between each control box in turn. If volume on Interphone Amplifier BC-667 needs adjusting, insert a screw driver through the panel opening marked VOLUME and turn the shaft.

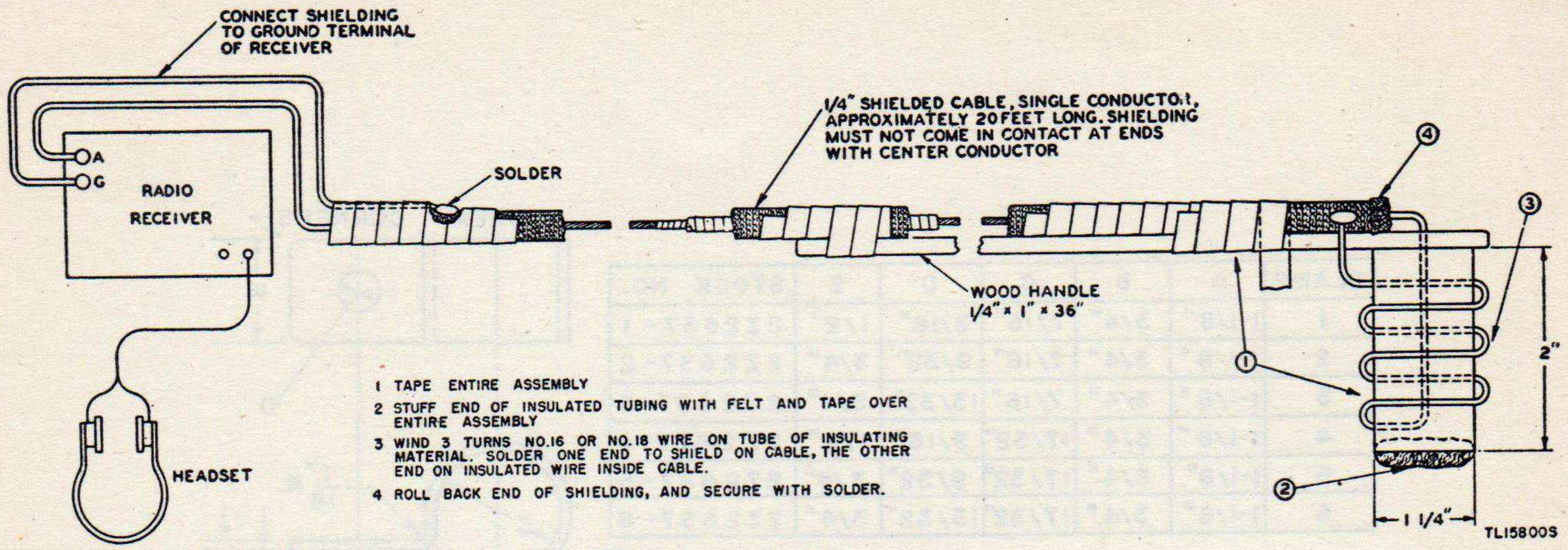

1 TAPE ENTIRE ASSEMBLY
2 STUFF END OF INSULATED TUBING WITH FELT AND TAPE OVER ENTIRE ASSEMBLY
3 WIND 3 TURNS NO.16 OR NO.18 WIRE ON TUBE OF INSULATING MATERIAL. SOLDER ONE END TO SHIELD ON CABLE, THE OTHER END ON INSULATED WIRE INSIDE CABLE.
4 ROLL BACK END OF SHIELDING, AND SECURE WITH SOLDER.

Figure 1. Probe antenna.

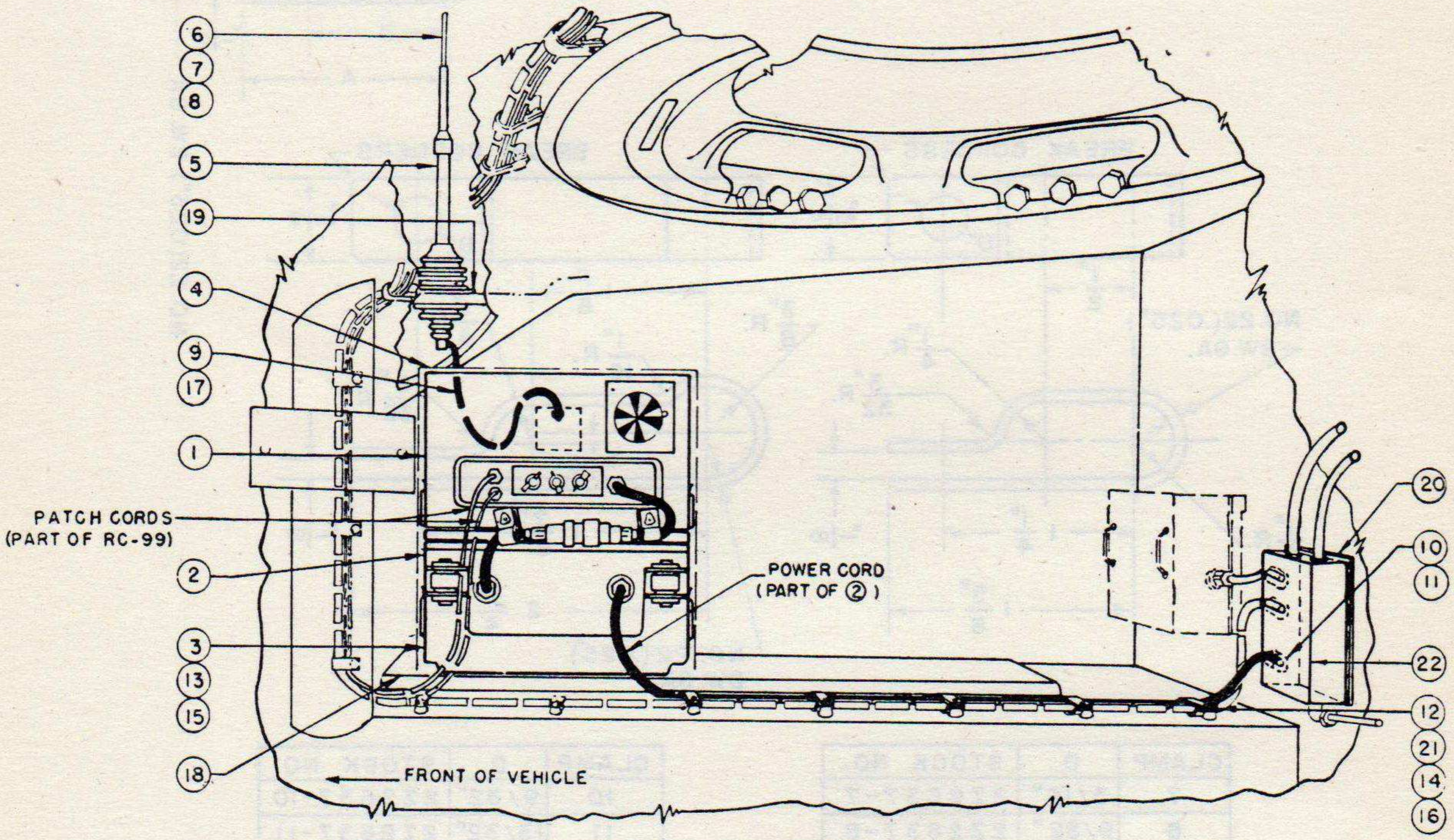

VIEW A

VIEW OF RADIO AND INTERPHONE EQUIPMENT IN RIGHT SPONSON OF DRIVING COMPARTMENT

ITEM NO.	NAME OF ITEM	QUANTITY REQUIRED
1	RADIO RECEIVER AND TRANSMITTER BC-659-(*)	1
2	POWER SUPPLY UNIT PE-120-(*)	1
3	MOUNTING FT-250-(*)	1
4	COVER BG-153	1
5	MAST BASE AB-15/GR	1
6	MAST SECTION MS-118	1
7	MAST SECTION MS-117 SEE NOTE 4	1
8	MAST SECTION MS-116	1
9	WIRE W-128 36 INCHES SEE NOTE 3	1
10	CONNECTOR NO. 61007	1
11	BONDNUT BL-50	1
12	CLAMP NO. 7 PER FIG. 3	5
13	HEX HEAD CAP SCREW 1/4-20 X 1/2	4
14	ROUNDHEAD MACH SCREW NO. 8-32 X 3/8	5
15	LOCKWASHER SAE REG FOR 1/4 SCREW	4
16	LOCKWASHER SAE REG FOR NO. 8 SCREW	5
17	TERMINAL PER FIG. 5 SEE NOTE 3	1
18	BRACKET	1
19	AERIAL SUPPORT	1
20	BRACKET SEE NOTE 5	1
21	SPACER	5
22	TERMINAL BOX	1

NOTES:

1. QUANTITIES LISTED DO NOT INCLUDE SPARES. FOR ADDITIONAL COMPONENTS AND SPARE PARTS, SEE COMPONENTS PARTS LIST.
2. UNLESS SPECIFIED OTHERWISE, DIMENSIONS ARE IN INCHES.
3. CUT 9 TO PROPER LENGTH. TIN END FOR ANTENNA CONNECTION AND SOLDER 17 SECURELY TO OTHER END.
4. IF 5 6 7 AND 8 ARE NOT AVAILABLE, USE MAST BASE MP-48 OR MP-48-A WITH MAST SECTIONS MS-51, MS-52, AND MS-53.
5. 18 TO 22 INCLUSIVE ARE FURNISHED IN THE VEHICLE BY THE MANUFACTURER.

TL13543-S

Figure 2. Installation of Radio Set SCR-610-(*).

CLAMP	A	B	C	D	E	STOCK NO.
1	1-1/8"	3/4"	7/16"	3/16"	1/2"	2Z2637-1
2	1-1/8"	3/4"	7/16"	9/32"	3/4"	2Z2637-2
3	1-1/8"	3/4"	7/16"	13/32"	3/4"	2Z2637-3
4	1-1/8"	3/4"	17/32"	3/16"	1/2"	2Z2637-4
5	1-1/8"	3/4"	17/32"	9/32"	3/4"	2Z2637-5
6	1-1/8"	3/4"	17/32"	13/32"	3/4"	2Z2637-6

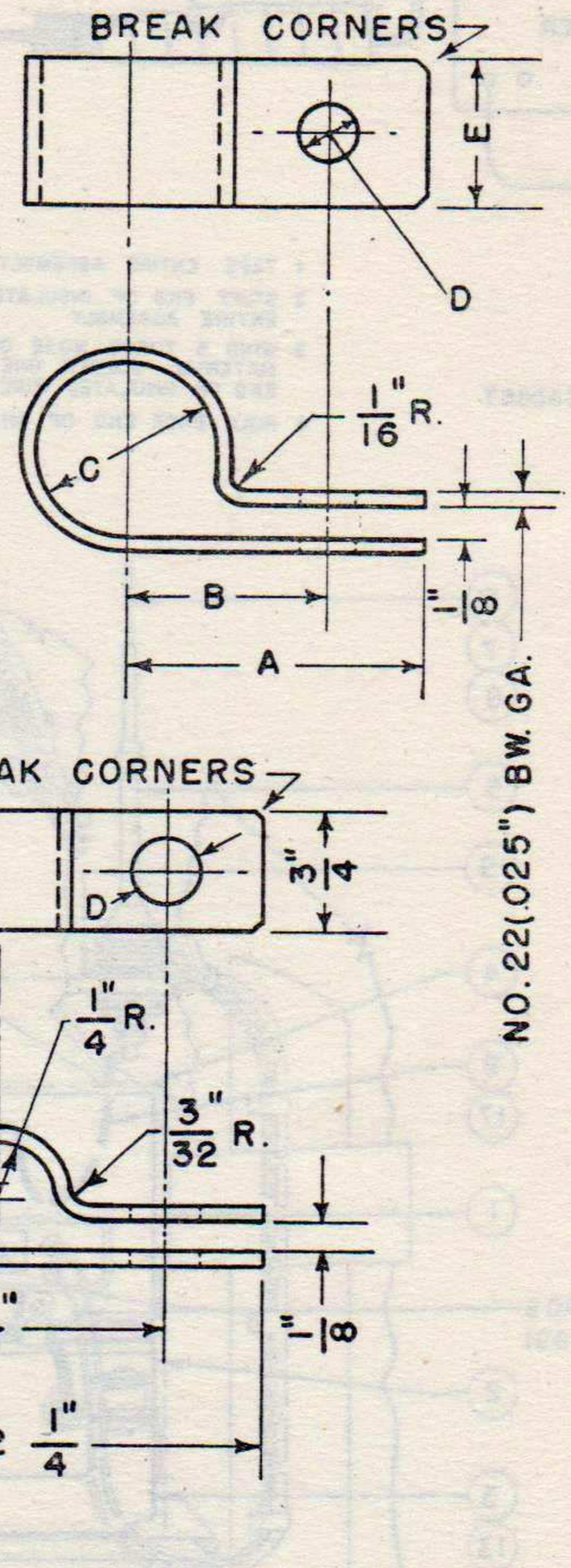

CLAMP	D	STOCK NO.
7	3/16"	2Z2637-7
8	9/32"	2Z2637-8
9	13/32"	2Z2637-9

CLAMP	D	STOCK NO.
10	9/32"	2Z2637-10
11	13/32"	2Z2637-11

TL13319

NOTE:
TOLERANCES ± 1/32".

Figure 3. Clamps for radio cordage.

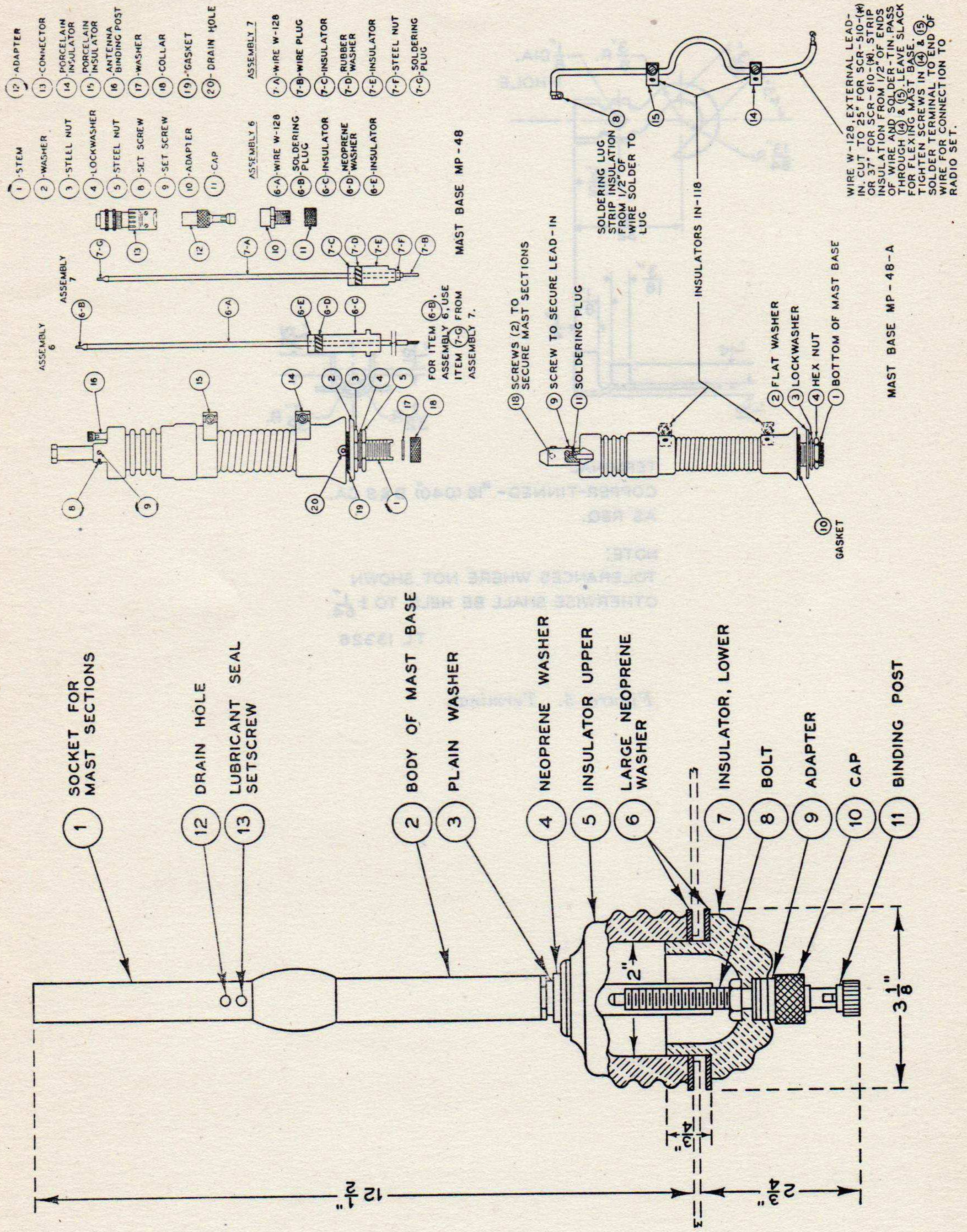

Figure 4. Antenna systems.

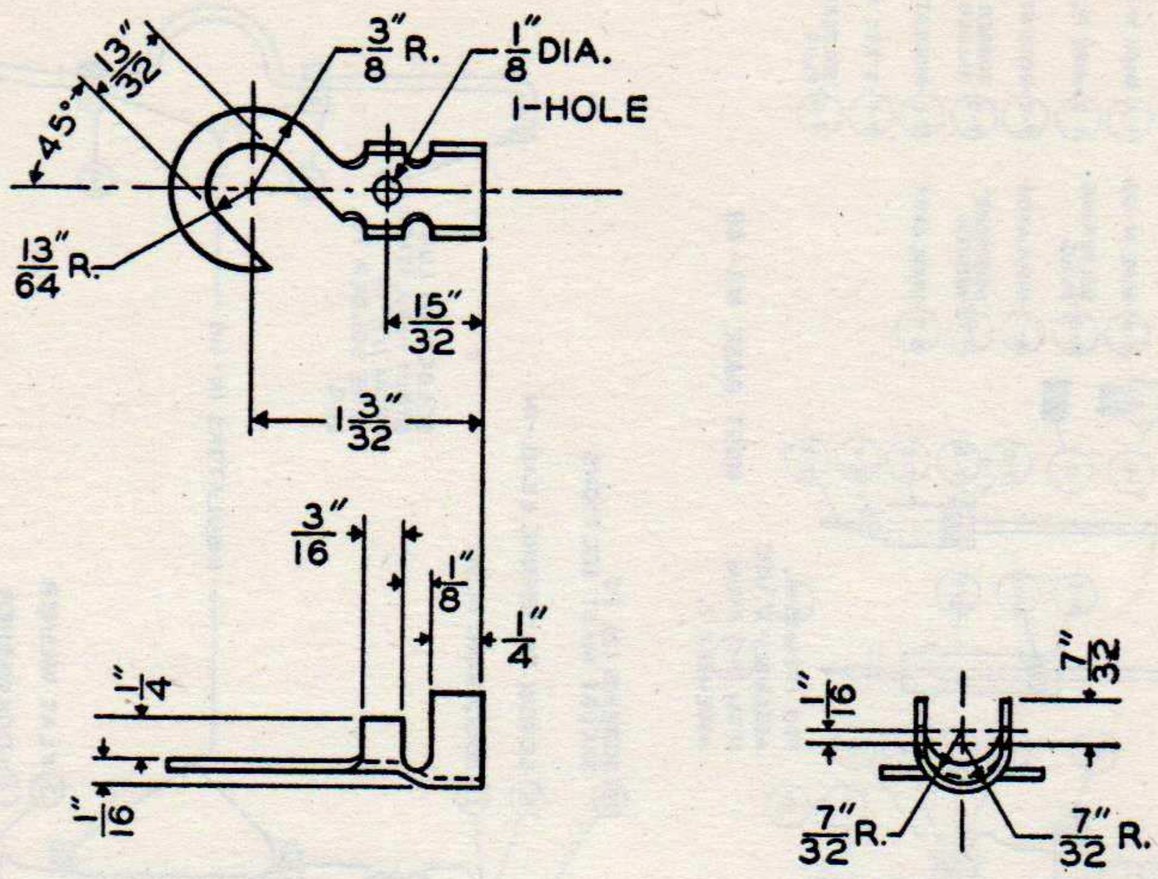

TERMINAL
COPPER-TINNED- #18 (.040") B&S GA.
AS REQ.

NOTE:
TOLERANCES WHERE NOT SHOWN
OTHERWISE SHALL BE HELD TO ± 1/64"

TL 13326

Figure 5. Terminal.

ITEM NO.	NAME OF ITEM	QUANTITY REQUIRED
1	Radio RECEIVER AND TRANSMITTER BC-1335-(*) SEE NOTE 3	1
2	BATTERY CHARGER PE-219 SEE NOTE 3	2
3	BOX CH-291	6
4	BATTERY BB-54-A	
5	MOUNTING FT-506	
6	COVER BG-192	
7	MAST BASE AB-15/GR	
8	TERMINAL BOX J-72/GR	
9	ADAPTER M-359	
10	CORD CG-67/MRQ-2 9 FEET SEE NOTE 4	3
11	CORD CD-1383	
12	MAST SECTION MS-118	
13	MAST SECTION MS-117	1
14	MAST SECTION MS-116	
15	BONDING JUMPER	
16	CONNECTOR NO. 61007	6
17	BUNDNUT BL-50	4
18	CLAMP NO. 7 PER FIG. 3	6
19	HEX HEAD CAP SCREW 1/4-20 X 1/2	4
20	ROUNDHEAD MACH SCREW NO. 8-32 X 3/8	6
21	TOOTHTYPE LOCKWASHER 1/4 IET	
22	LOCKWASHER SAE REG FOR NO. 8 SCREW	
23	BRACKET	6
24	AERIAL SUPPORT	1
25	BRACKET SEE NOTE 5	
26	SPACER	
27	TERMINAL BOX	1

NOTES:

1. QUANTITIES LISTED DO NOT INCLUDE SPARES. FOR ADDITIONAL COMPONENTS AND SPARE PARTS, SEE COMPONENT PARTS LIST.
2. UNLESS SPECIFIED OTHERWISE, DIMENSIONS ARE IN INCHES.
3. SET (2) FOR 24 VOLTS AND (1) FOR 6 VOLT OPERATION.
4. AVOID SHARP BENDS IN (10)
5. (23) TO (27) INCLUSIVE ARE FURNISHED IN THE VEHICLE BY THE MANUFACTURER.

TL13545-5

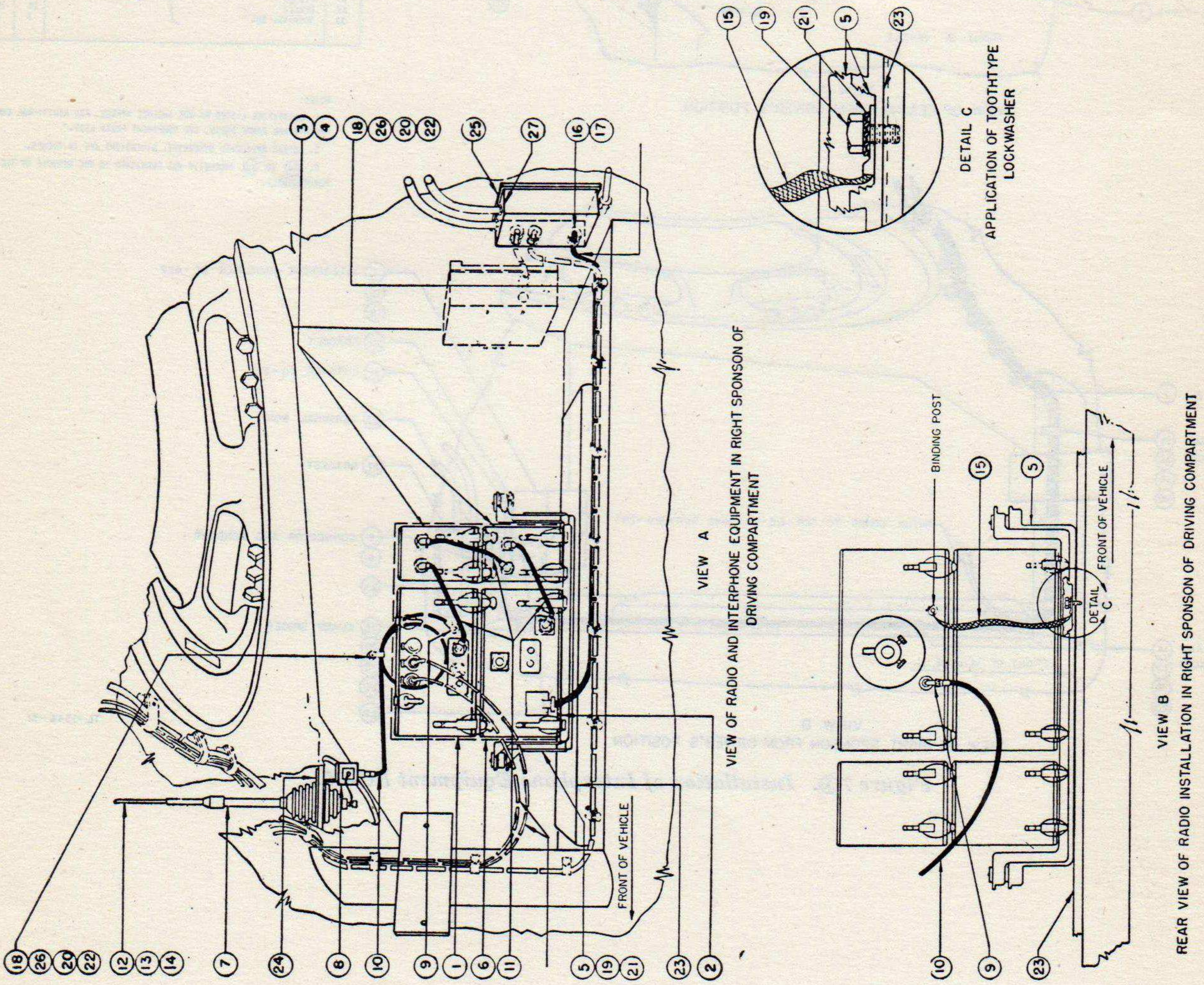

Figure 6. Installation of Radio Set SCR-619.

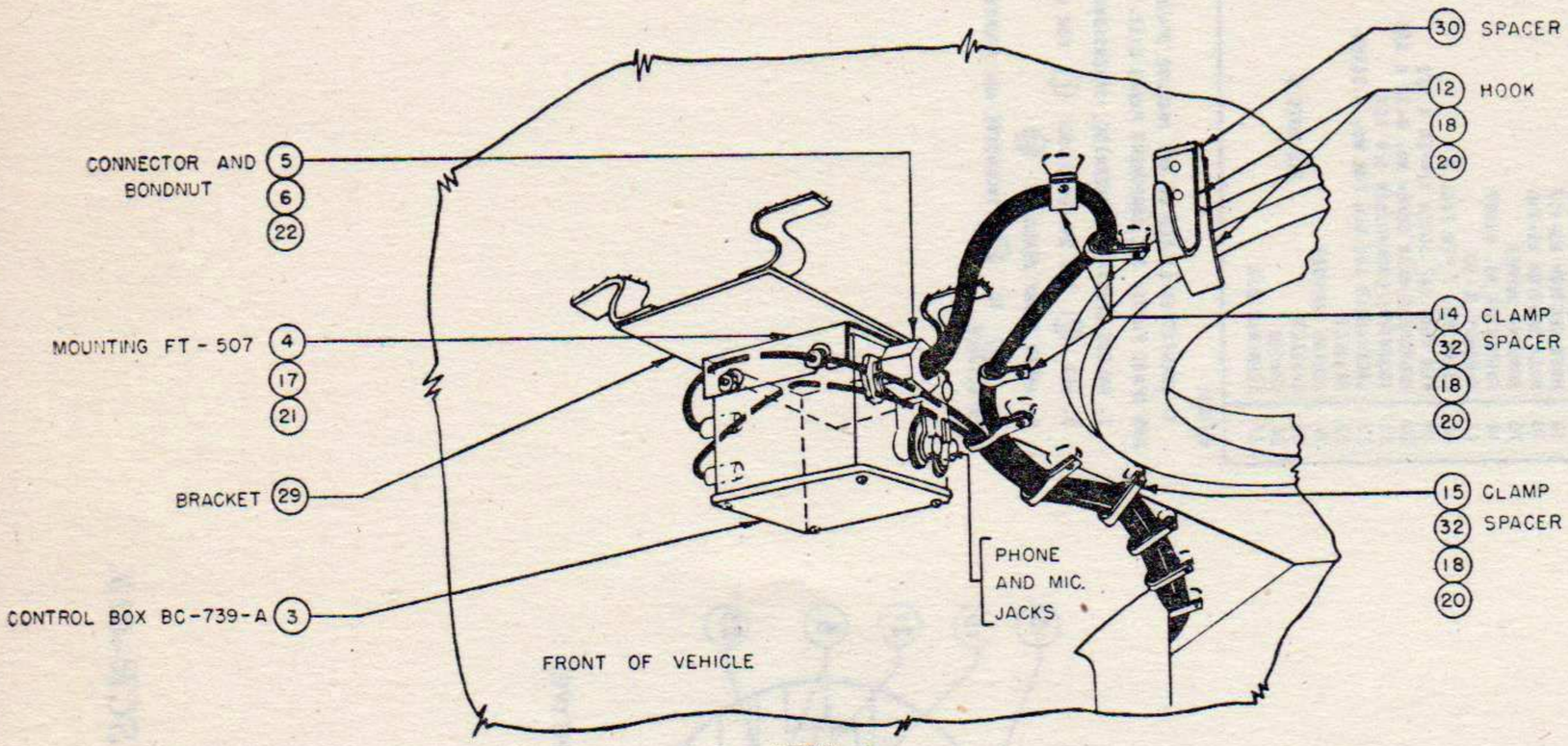

VIEW A
VIEW OF CEILING FROM DRIVER'S POSITION

ITEM NO.	NAME OF ITEM		QUANTITY REQUIRED T89	QUANTITY REQUIRED M40(783)
1	INTERPHONE AMPLIFIER BC-667		1	1
2	INTERPHONE CONTROL BOX BC-606-H		1	1
3	CONTROL BOX BC-739-A		2	2
4	MOUNTING FT-507		3	3
5	CONNECTOR NO. 61007		8	8
6	BONDNUT BL-50		8	8
7	CORDAGE CO-213 11 FEET 4 INCHES	APPROXIMATELY	1	1
8	CORDAGE CO-213 4 FEET	APPROXIMATELY	1	1
9	CORDAGE CO-213 36 INCHES	APPROXIMATELY	-	1
10	CORDAGE CO-213 27 INCHES	APPROXIMATELY	1	-
11	CORDAGE CO-213 22 INCHES	APPROXIMATELY	1	1
12	HOOK PER FIG. 10		5	5
13	CLIP		6	6
14	CLAMP NO. 4 PER FIG. 3		12	10
15	CLAMP NO. 7 PER FIG. 3		14	14
16	HEX HEAD CAP SCREW 1/4-20 X 1 1/4		4	4
17	ROUNDHEAD MACH SCREW NO. 8-32 X 1/2		15	15
18	ROUNDHEAD MACH SCREW NO. 8-32 X 3/8		30	28
19	LOCKWASHER SAE REG FOR 1/4 SCREW		4	4
20	LOCKWASHER SAE REG FOR NO. 8 SCREW		36	34
21	TOOTHTYPE LOCKWASHER NO. 8 IET		9	9
22	RUBBER WASHER 1 1/8 OD X 25/32 ID X 1/16		4	4
23	REDUCING WASHER		2	2
24	INTERPHONE MOUNTING PLATE ASSEMBLY ORD. 7092967	SEE NOTE 3	-	1
25	BRACKET	SEE NOTE 3	1	1
26	BRACKET	SEE NOTE 3	1	2
27	BRACKET	SEE NOTE 3	3	3
28	BRACKET	SEE NOTE 3	1	-
29	BRACKET	SEE NOTE 3	1	1
30	SPACER	SEE NOTE 3	1	1
31	SPACER	SEE NOTE 3	3	3
32	SPACER	SEE NOTE 3	26	24
33	TERMINAL BOX	SEE NOTE 3	3	3

NOTES:

1. QUANTITIES LISTED DO NOT INCLUDE SPARES. FOR ADDITIONAL COMPONENTS AND SPARE PARTS, SEE COMPONENT PARTS LIST.

2. UNLESS SPECIFIED OTHERWISE, DIMENSIONS ARE IN INCHES.

3. (24) TO (33) INCLUSIVE ARE FURNISHED IN THE VEHICLE BY THE MANUFACTURER.

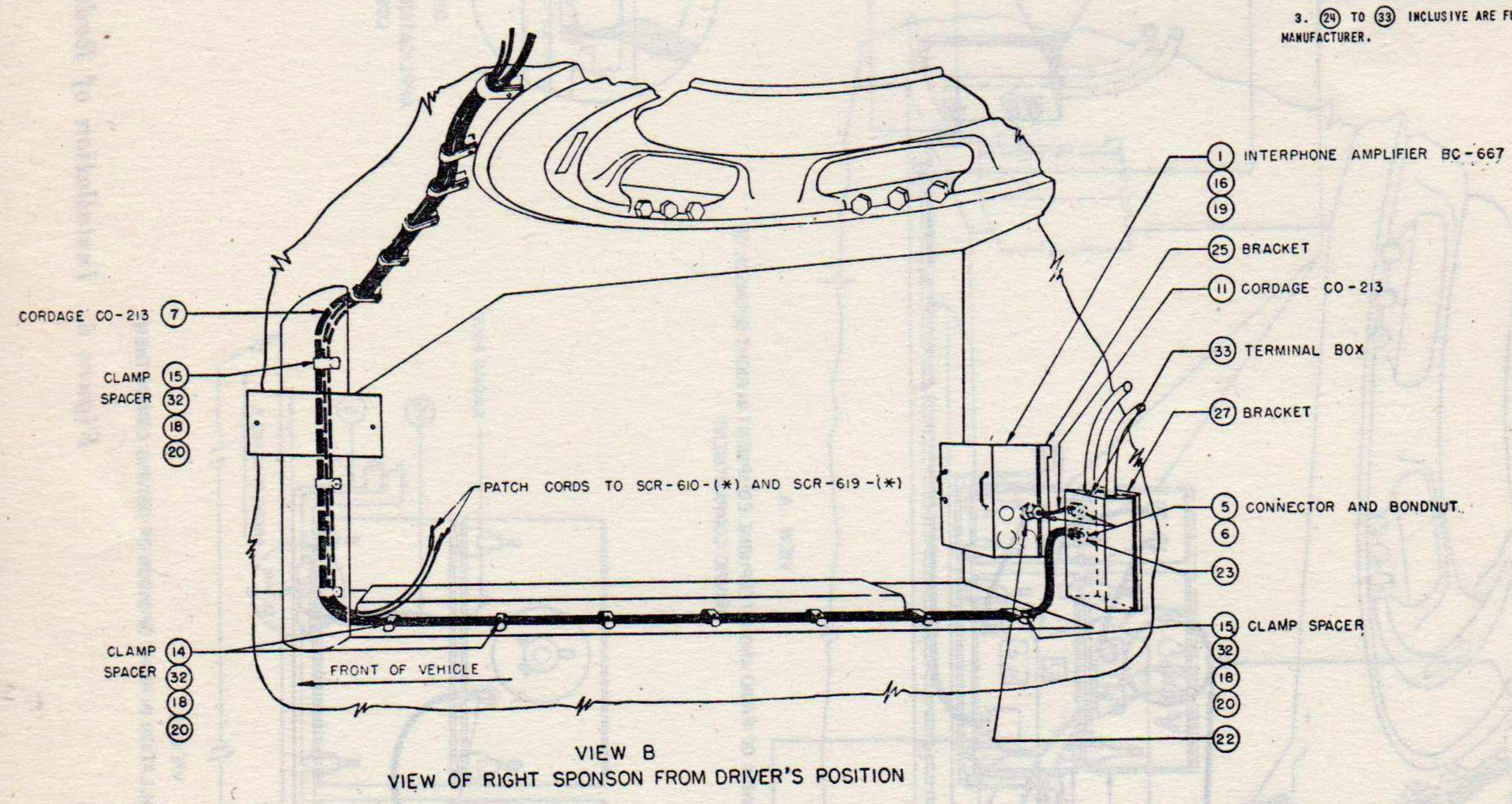

VIEW B
VIEW OF RIGHT SPONSON FROM DRIVER'S POSITION

TL 13546-S1

Figure 7①. Installation of Interphone Equipment RC-99.

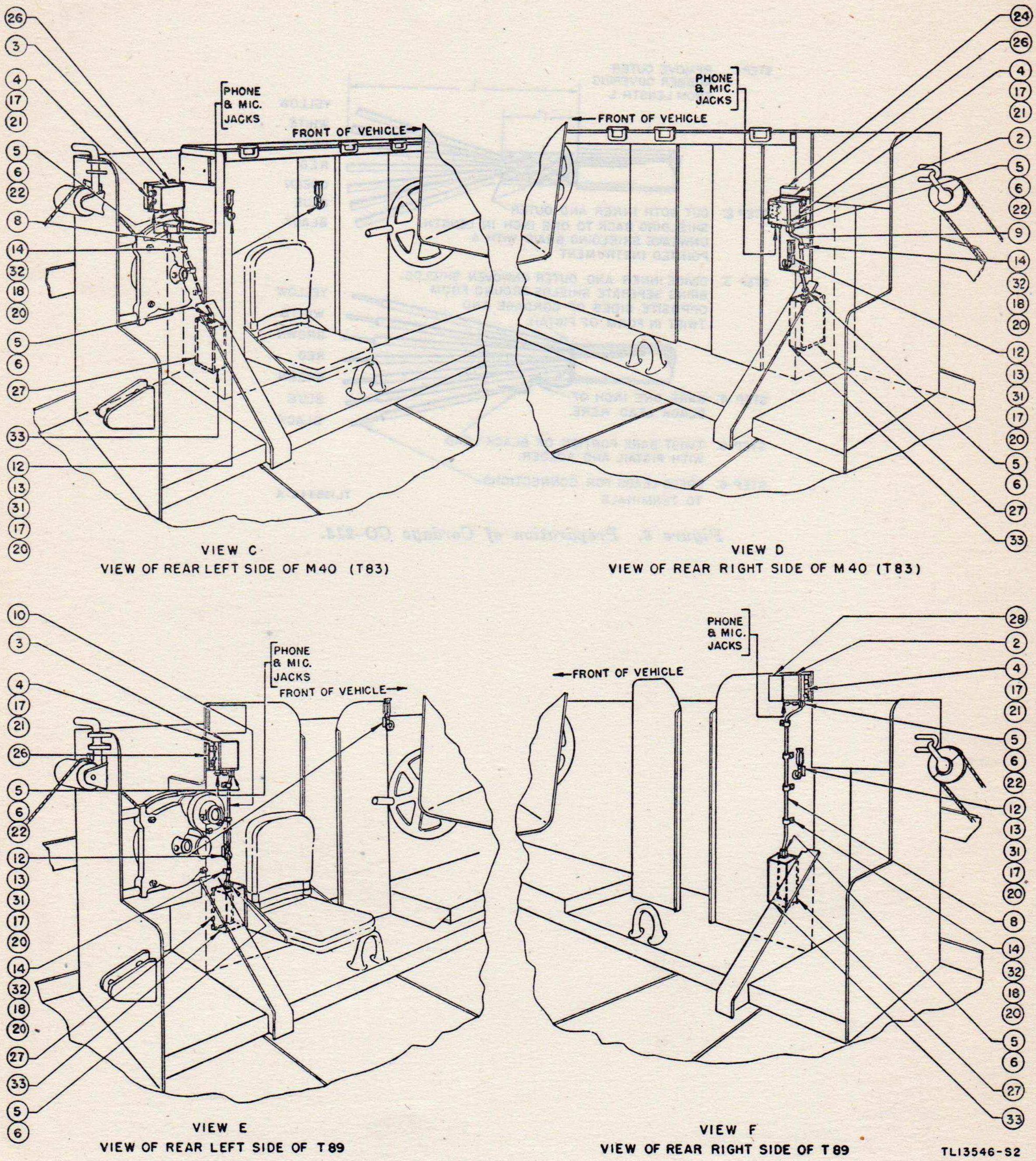

Figure 7②. Installation of Interphone Equipment RC-99—continued.

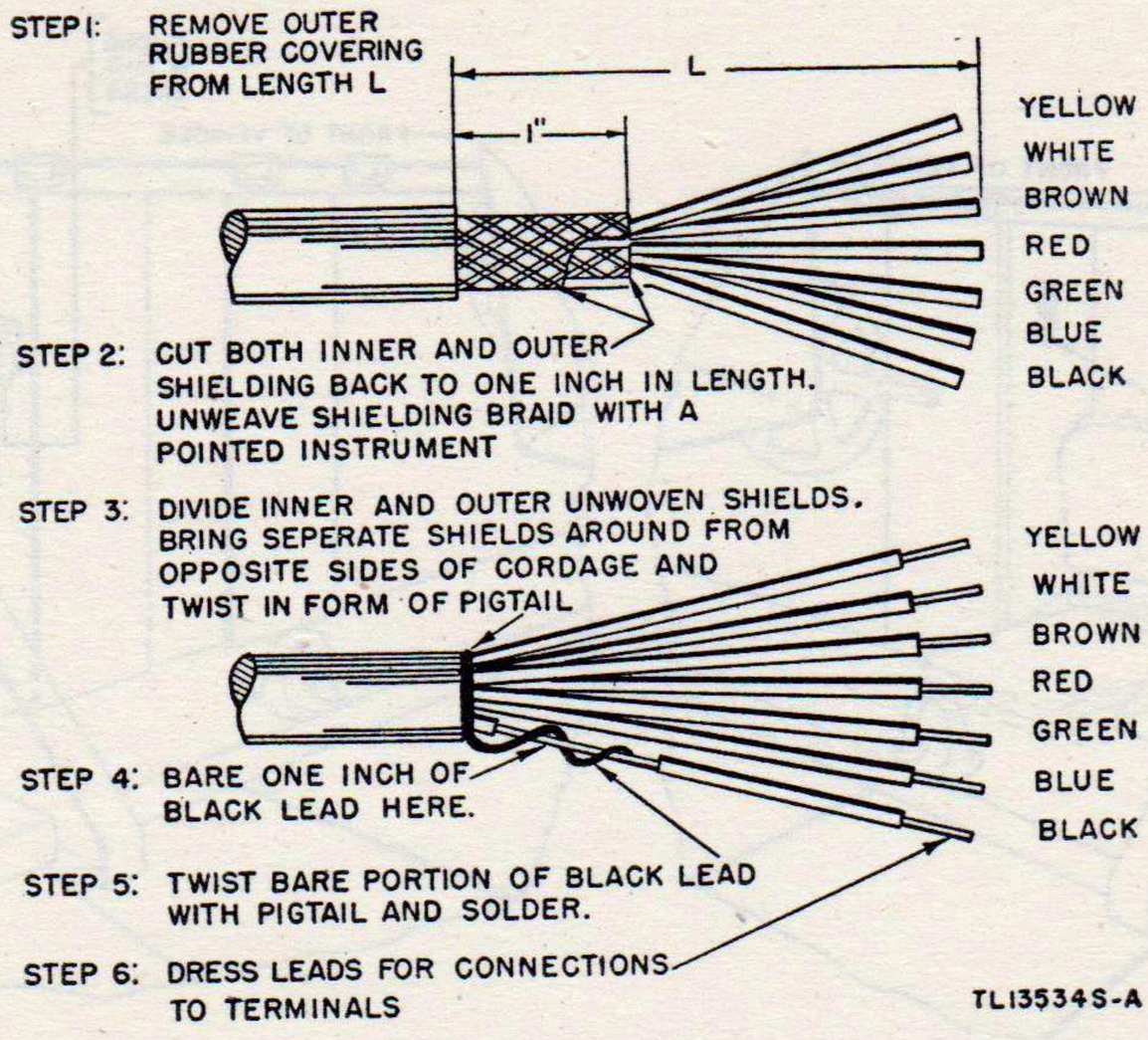

Figure 8. Preparation of Cordage CO-213.

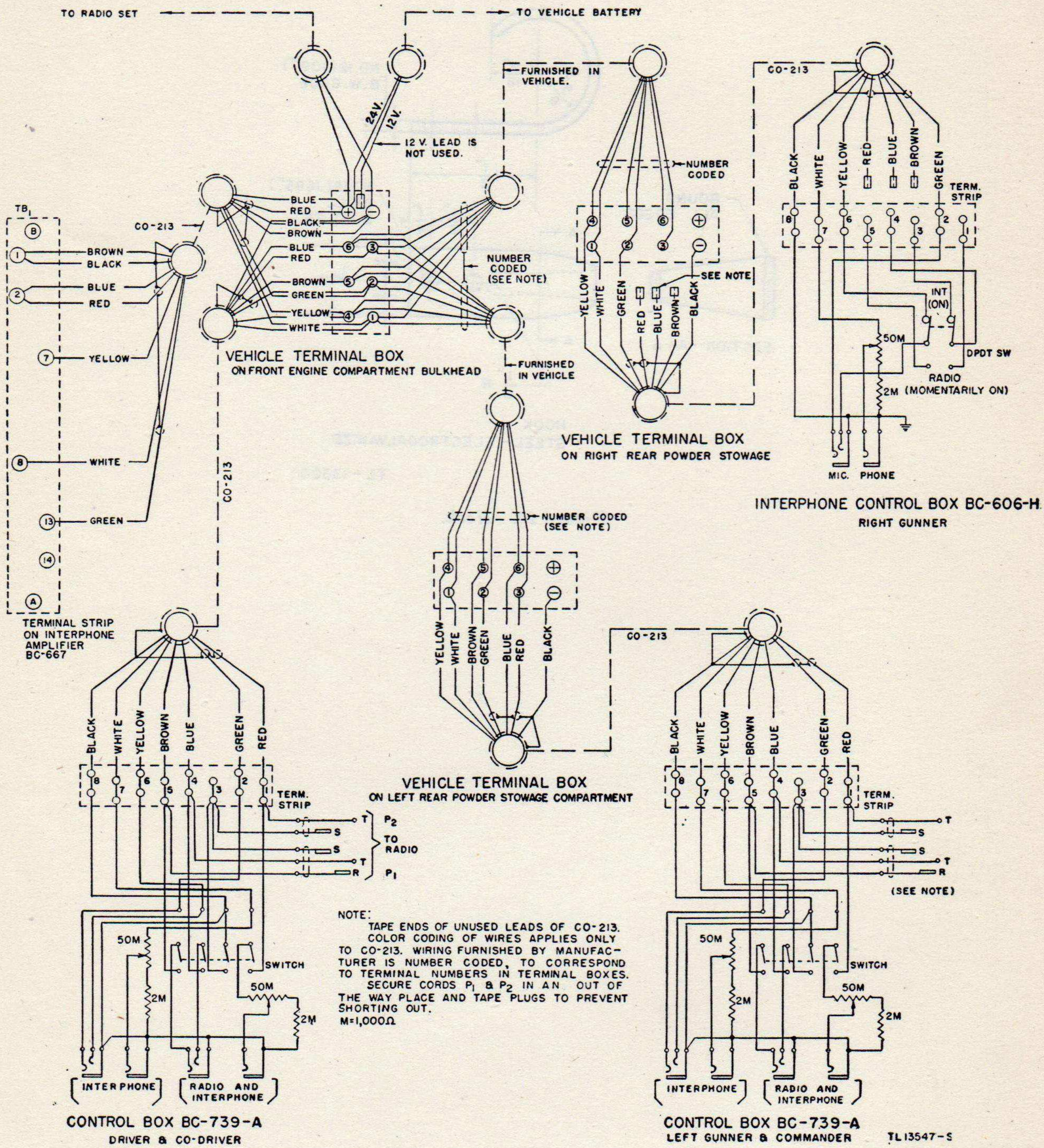

Figure 9. Wiring diagram for Interphone Equipment RC-99.

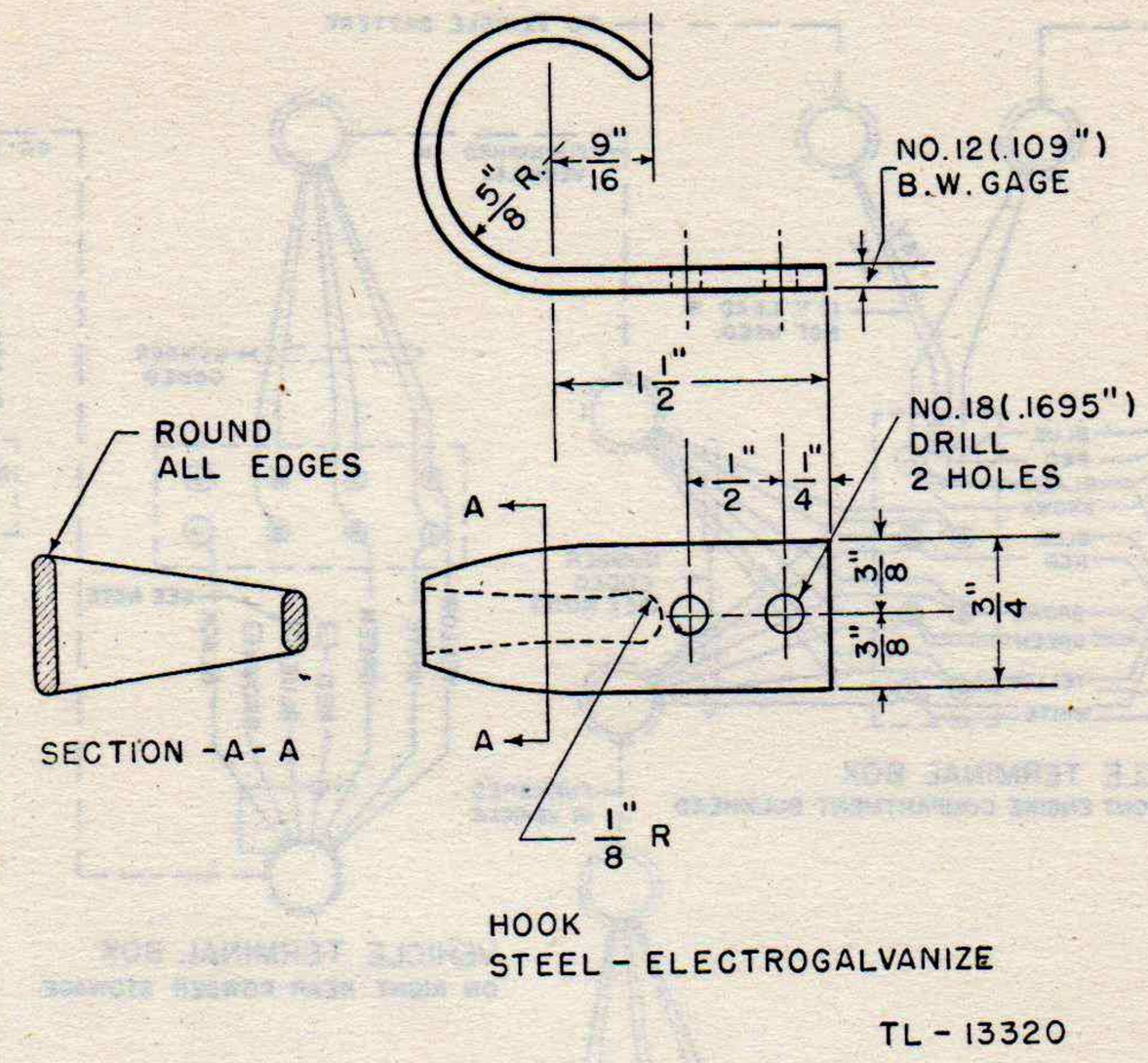

Figure 10. Hook.