ARMY SERVICE FORCES CATALOG **ORD 9 SNL G-510**

List of All Service Parts
Includes ORD 9 SNL G-691

Niet gangbaar

K2-012

ORDNANCE SUPPLY CATALOG

Group G

Technical Reference TM 9-816

Standard Nomenclature List No. G-510
Standard Nomenclature List No. G-691

LIST OF ALL SERVICE PARTS

GEREED HRD
16 JAN 1959

for

Truck, 4 to 5-Ton, 4 x 4, C. O. E., Tractor

(Autocar Model U-7144-T) (G-510) (White Model 444) (G-691)

Parts formerly listed in TM 10-1116, TM 10-1566 and TM 10-1568, are now included in this Ord 9 SNL G-510.

Afd. DOCUMENTATIE
Datum 22 juni 1960
Par.

HEADQUARTERS, ARMY SERVICE FORCES, 1 JUNE 1945

Headquarters, Army Service Forces,

Washington 25, D. C., 1 June 1945

Army Service Forces Ordnance Supply Catalog, ORD 9, SNL G-510, and G-691, List of all Service Parts, for Truck, 4 to 5-Ton, 4 x 4, C. O. E., Tractor, Autocar Model U-7144-T and White Model 444, has been prepared under the supervision of the Chief of Ordnance and is published for the information and guidance of all concerned.

SPX 461 (1 May 1945)

By command of General SOMERVELL:

W. D. STYER,
Lieutenant General, General Staff Corps,
Chief of Staff.

OFFICIAL:
J. A. ULIO,
Major General,
The Adjutant General.

DISTRIBUTION: AAF (10); AGF (10); ASF (2); T of Opns (10); AAF Comds (2); Arm & Sv Bd (2); S Div ASF (1); Tech Sv (2); SVC (10); PC&S (1) except Air Bases (3); PE, 9 (5); Dist 0, 9 (5); Dist Br 0, 9 (3); Reg 0, 9 (3), Establishments, 9 (5); Decentralized Sub-0, 9 (3); Tk Deps, 9 (5); Gen & Sp Sv Schs (10); USMA (2); A (10); CHQ (10); D (2); AF (5); R 9 (2); Bn 9 (2); C 9 (3).

Refer to FM 21-6 for explanation of distribution formula.

ARMY SERVICE FORCES CATALOG **ORD 9 SNL G-510**

List of All Service Parts
Includes ORD 9 SNL G-691

ORDNANCE SUPPLY CATALOG

Group G

Technical Reference TM 9-816

Standard Nomenclature List No. G-510
Standard Nomenclature List No. G-691

LIST OF ALL SERVICE PARTS

for

Truck, 4 to 5-Ton, 4 x 4, C. O. E. Tractor

(Autocar Model U-7144-T) (G-510) (White Model 444) (G-691)

GENERAL INFORMATION

For full information relative to Standard Nomenclature Lists, the procedure followed and principles employed in the compilation, together with the purposes and uses thereof, see the Introduction to the Ordnance Catalog (ORD 1 10C), the Ordnance Provision System Regulations (OPSR) and the Ordnance Publications for Supply Index (ORD 2 OPSI).

The Standard Nomenclature Lists for major items consists of three main parts: The Organizational Spare Parts and Equipment (ORD 7), the Higher Echelon Spare Parts and Equipment (Addendum) (ORD 8), and the List of all Service Parts (ORD 9). These three subdivisions may be published separately or may be combined. In this publication the ORD 9 is printed separately.

Afd. DOCUMENTATIE
Datum 2 2 juni 1960
Par.

QUICK REFERENCE INDEX

General Information	
Engine Group	01
Clutch Group	02
Fuel Group	03
Exhaust Group	04
Cooling Group	05
Electrical Group	06
Transmission Group	07
Transfer Case Group	08
Propeller Shaft and Universal Joint Group	09
Front Axle Group	10
Rear Axle Group	11
Brake Group	12
Wheels, Hubs and Drum Group	13
Steering Group	14
Frame and Brackets Group	15
Springs and Shock Absorber Group	16
Fenders Group	17
Body Group	18
Guards Group	21
Misc. Body, Chassis and Access. Group	22
Radio Group	26
Notes	
INDEXES	

GENERAL INFORMATION (Cont'd)

SCOPE

This List of All Service Parts contains information for the identification of all parts which are considered items of service for the vehicle listed below:

Truck, 4 to 5-Ton, 4 x 4, C. O. E., Tractor, (Autocar Model U-7144-T) (White Model 444)

THIS PUBLICATION IS NOT TO BE USED FOR THE REQUISITIONING OF PARTS. IT IS TO BE USED ONLY FOR INFORMATION AND IDENTIFICATION.

STANDARDIZED GOVERNMENT GROUPING

The parts listed in this catalog are divided into groups and subgroups in accordance with the Standardized Government Grouping. This division into groups facilitates the location and identification of each part. The Standardized Government Grouping as adapted to this catalog is outlined on pages 6 and 7.

ILLUSTRATIONS

Exploded views aid the user of this catalog in locating and identifying parts. All illustrations are placed as close as possible to the group to which they apply, and are identified by a figure number and title. On each illustration or separate reference legend, the noun name, piece mark and group number of each part illustrated are given. A list of illustrations, and an index of all figures and the pages on which they appear will be found in the back of the book.

COMPONENTS OF KITS, SETS AND ASSEMBLIES

Whenever any doubt might exist as to what items are included as components of kits, sets or assemblies, an explanatory note or complete listing of such components is shown.

ATTACHING PARTS

Attaching parts, such as bolts, nuts, rivets, screws, washers, etc., are indented immediately under the item which they attach. Whenever two similar items, having the same attaching parts, such as right and left fenders, are listed, they are placed one immediately following the other and the attaching parts for both are covered by a single listing under the second part. The quantities shown for the attaching parts are those necessary to attach both items.

INDEXES

Indexes are listed in the back of the book in the following sequence: Alphabetical, Illustrations, Official Stock Numbers, Manufacturers and Ordnance Part Numbers, and Cross-reference List of Autocar to White numbers and White to Autocar numbers.

OFFICIAL STOCK NUMBER

The prefix letter and number of the official stock number (i.e. G104-XX-XXXXX, G103-XX-XXXXX or G167-XX-XXXXX) signifies that the particular part of component was originally coded under the major item designation for that SNL, and does NOT mean that the part is used ONLY in that major item. All subsequent lists for different vehicles will include the same official stock number for this same part.

THE MAJOR ITEM COVERED BY THIS CATALOG IS DESIGNATED AS A GENERAL PURPOSE VEHICLE, AS DEFINED IN PARAGRAPH 3, AR 850-15, DATED 28 AUGUST 1943.

DEFINITION OF LOCATIONAL TERMS

RIGHT or LEFT designation is given to an item in respect to its position in the vehicle when it is viewed from the rear facing forward.

HOW TO FIND PARTS

This catalog is arranged and cross-indexed so that parts can be found easily even though only one of the several identifying factors is known. The various ways in which parts can be located are as follows:

If the nomenclature (basic name) only is known, and the subgroup is not, refer to the alphabetical index in the back of the book. This index will give the subgroup in which the part is listed. As the part names are arranged in alphabetical order within this subgroup, the complete listing of the part can readily be found.

If any one of the Part Numbers — Ordnance Number, Official Stock Number, or Manufacturer's Number — is known, refer to the appropriate numerical index in the back of the book. This index will give the subgroup number from which the part can be found by following the precedure given in the previous paragraph.

If the use, or function, or location of the part is known, refer to the illustration index to determine in which plate or plates the part is likely to appear; then turn to these plates until a picture of the part is found. The arrow pointing to the part will lead out to a listing of the name, part number and subgroup number, which will permit locating the complete listing of the part.

NOTE

CROSS-REFERENCE LIST OF AUTOCAR TO WHITE NUMBERS AND WHITE TO AUTOCAR NUMBERS WILL BE FOUND IN THE BACK OF BOOK. TRUCK, 4 TO 5-TON, 4 x 4, C. O. E., TRACTOR (AUTOCAR MODEL U-7144-T), IS IDENTICAL WITH TRUCK, 4 TO 5-TON, 4 x 4, C. O. E., TRACTOR (WHITE MODEL 444), ALTHOUGH WHITE HAS ASSIGNED ITS OWN NUMBERS.

LIST OF ABBREVIATIONS

adj.	adjustable
alloy-S	alloy steel
anld.	annealed
AR	as required
b-hd.	button head
bdg-hd.	binding head
br.	brass
BWG	Birmingham Wire Cage
bz.	bronze
cal.	caliber
cap.	capacity
cd-pltd.	cadmium plated
cham-fl-ck-hd.	chamfered flat countersunk head
C.I.	cast iron
ck.	countersunk
cold-fin.	cold finish
cop.	copper
cp.	candle power
deg.	degree
diam.	diameter
dld. f/c-pin	drilled for cotter pin
dld. f/lkg-wire	drilled for locking wire
ext.	external
ext-int.	external-internal
fl-hd.	flat head
ft.	feet
gal.	gallon
glvd.	galvanized
hd.	head
hdls.	headless
hex.	hexagon
hex-hd.	hexagonal head
hv.	heavy
I.D.	inside diameter
in.	inch
int.	internal
int-ext.	internal-external
lb.	pound
lgt.	light
L.H.	left hand
M.I.	malleable iron
mm.	millimeter
mtg.	mounting
NC	National Coarse
NF	National Fine
No.	number
NPT	National Pipe Thread
NS	National Special
O.D.	outside diameter
O/S	oversize
oval-fil-hd.	oval fillister head
oval-hd.	oval head
pt.	point
reg.	regular
rd-hd.	round head
rd-pt.	round point
R.H.	right hand
S.	steel
SAE	Society of Automotive Engineers
Sec.	Section
s-fin.	semi-finished
slotted-hd.	slotted head
socket-hd.	socket head
sq-hd.	square head
S.R.	single row
std.	standard
stght.	straight
tee-hdl.	tee handle
thd.	thread
thin-hd.	thin head
truss-hd.	truss head
U.S.	United States
U/S	undersize
v.	volt
w/	with
w/o	without

MANUFACTURERS' IDENTIFICATION SYMBOLS

AB	AETNA BALL BEARING MANUFACTURING COMPANY	Chicago, Ill.
AC	AC SPARK PLUG DIVISION (GENERAL MOTORS CORPORATION)	Flint, Mich.
ACC	AMERICAN CABLE DIVISION (AMERICAN CHAIN & CABLE COMPANY)	New York, N. Y.
AD	ALEMITE DIVISION (STEWART-WARNER CORPORATION)	Chicago, Ill.
AHR	AMERICAN HARD RUBBER COMPANY	New York, N. Y.
AL	ELECTRIC AUTO-LITE COMPANY	Toledo, Ohio
AUC	AUTOCAR COMPANY (THE)	Ardmore, Pa.
BW	BUDD WHEEL COMPANY	Detroit, Mich.
BWE	BENDIX-WESTINGHOUSE AUTOMOTIVE AIR BRAKE COMPANY	Elyria, Ohio
CM	CHICAGO RAWHIDE MANUFACTURING COMPANY (THE)	Chicago, Ill.
CP	CHAMPION SPARK PLUG COMPANY	Toledo, Ohio
DN	DONALDSON COMPANY, INC.	St. Paul, Minn.
DR	DELCO-REMY DIVISION (GENERAL MOTORS CORPORATION)	Anderson, Ind.
DSF	DAYTON STEEL FOUNDRY COMPANY	Dayton, Ohio
ECM	ECLIPSE MACHINE DIVISION (BENDIX AVIATION CORPORATION)	Elmira, N. Y.
ES	ELECTRIC STORAGE BATTERY COMPANY	Philadelphia, Pa.
FR	FRAM CORPORATION	East Providence, R. I.
GL	GUIDE LAMP DIVISION (GENERAL MOTORS CORPORATION)	Anderson, Ind.
GLH	L. H. GILMER COMPANY	Philadelphia, Pa.
GTS	GITS BROS. MANUFACTURING COMPANY	Chicago, Ill.
HA	HANDY GOVERNOR DIVISION (KING-SEELEY CORPORATION)	Ann Arbor, Mich.
HC	COLE-HERSEE COMPANY	South Boston, Mass.
HE	HOUDE ENGINEERING CORPORATION	Buffalo, N. Y.
HM	HERCULES MOTORS CORPORATION	Canton, Ohio
HY	HYATT BEARINGS DIVISION (GENERAL MOTORS CORPORATION)	Harrison, N. J.
KLC	KEYSTONE LUBRICATING COMPANY	Philadelphia, Pa.
LI	LISLE CORPORATION	Clarinda, Iowa
LPE	LIPE-ROLLWAY CORPORATION	Syracuse, N. Y.
MG	McGILL MANUFACTURING COMPANY, INC.	Valparaiso, Ind.
MZ	"MAZDA"—GENERAL ELECTRIC COMPANY	Schenectady, N. Y.
ND	NEW DEPARTURE DIVISION (GENERAL MOTORS CORPORATION)	Bristol, Conn.
PG	PIERCE GOVERNOR COMPANY	Anderson, Ind.
RG	ROSS GEAR & TOOL COMPANY	Lafayette, Ind.
SKF	SKF INDUSTRIES, INC.	Philadelphia, Pa.
SP	SPICER MANUFACTURING CORPORATION	Toledo, Ohio
SPT	SPENCER THERMOSTAT COMPANY	Attleboro, Mass.
STN	STANT MANUFACTURING COMPANY	Connersville, Ind.
SW	STEWART-WARNER CORPORATION	Chicago, Ill.
SZ	SCHWITZER-CUMMINS COMPANY	Indianapolis, Ind.
TD	TIMKEN-DETROIT AXLE COMPANY	Detroit, Mich.
TIM	TIMKEN ROLLER BEARING COMPANY (THE)	Canton, Ohio
TP	THOMPSON PRODUCTS, INC.	Cleveland, Ohio
TRI	TRICO PRODUCTS CORPORATION	Buffalo, N. Y.
TS	TROY SUNSHADE COMPANY (THE)	Troy, Ohio
UTS	UNITED SPECIALTIES COMPANY	Chicago, Ill.
WH	WEATHERHEAD COMPANY (THE)	Cleveland, Ohio
Z	ZENITH CARBURETOR DIVISION (BENDIX AVIATION CORPORATION)	Detroit, Mich.

STANDARDIZED GOVERNMENT GROUPING

01 ENGINE GROUP

0100	Engine Assembly
0101A	Cylinder Block
0101B	Cylinder Head
0102	Crankshaft
0102A	Crankshaft Bearings
0103	Pistons
0103A	Rings
0103B	Piston Pins
0104	Connecting Rods
0104A	Connecting Rod Bearings
0105	Valves, Seats, Guides and Springs
0105A	Tappets or Lifts
0105D	Valve Covers and Gaskets
0106	Camshaft
0106A	Camshaft Bearings
0106B	Timing Gears
0106D	Gear Case Cover and Gaskets
0107	Oil Pump
0107A	Oil Pan
0107E	Oil Filter
0107F	Oil Filter Mounting Parts
0107G	Oil Filler
0107H	Level and/or Float Gages
0107J	Oil Lines and Fittings
0107K	Oil Pressure Regulator
0107M	Oil Breather
0107N	Crankcase Ventilator
0108	Manifolds as an Assembly
0108A	Intake Manifold
0108B	Exhaust Manifold
0108C	Heat Controls
0109	Flywheel
0109B	Ring Gear
0109C	Flywheel Housing
0110	Mountings
0113B	Accessory Drive

02 CLUTCH GROUP

0200	Clutch Assembly
0201	Clutch Disc
0201A	Facings and Rivets
0202	Cover, Pressure Plates and Springs
0203	Release Yoke, Bearings and Fork
0204	Pedal
0204A	Pedal Linkage
0205	Pilot Bearings
0207	Housing

03 FUEL GROUP

0300	Fuel Tanks
0300A	Tank Gage Unit
0301	Carburetor
0301A	Carburetor Mounting Parts
0301B	Choke (Automatic) and/or Choke Control
0301C	Air Cleaner
0302	Fuel Pump
0302A	Fuel Pump Mounting Parts
0303	Accelerator and Linkage
0303A	Hand Throttle and Linkage
0304	Fuel Lines
0305	Governor
0305A	Governor Controls
0306	Fuel Filters

04 EXHAUST GROUP

0401	Muffler
0402	Exhaust Pipe
0402A	Tail Pipe

05 COOLING GROUP

0501	Radiator
0502	Thermostat
0503–1	Water Pump, AUC-5UU040
0503–2	Water Pump, AUC-5UUA040
0503A	Fans
0503B	Fan and Generator Belts
0504	Radiator Mountings
0505	Engine Water Fittings and Hose

06 ELECTRICAL GROUP

0601	Generator
0601B	Regulators
0602	Cranking Motor
0602–1	Cranking Motor AUC-16HM4560
0602–2	Cranking Motor AUC-16UUB3560
0602A	Cranking Motor Magnetic or Solenoid Switch
0603	Distributor
0603–1	Distributor AUC-8UU3470
0603–2	Distributor AUC-8UU3470A
0604	Ignition Coil
0604A	Ignition Wiring
0604B	Spark Plugs
0604C	Ignition Lock or Switch
0605	Instruments (Ammeter, Oil Gage, Water Temperature Gage, Voltmeter and all Functional Parts)
0605B	Instrument Wiring
0605C	Panel Light
0606	Switches
0606B	Chassis Wiring
0606D	Circuit Breakers
0606E	Terminal Boxes
0606F	Trailer Electric Coupling Parts
0607	Head Lights
0607A	Lamp-Units (Sealed Beams)
0607B	Lamps
0607D	Parking and/or Blackout Lights
0608	Tail Lights and/or Blackout Lights
0609	Horns
0609A	Horn and/or Siren Button and Wiring
0610	Battery
0610A	Battery Hangers and/or Box
0610B	Starting Cables Connections

07 TRANSMISSION GROUP

0700	Transmission Assembly
0701	Case
0703	Main Drive Pinion and Bearings
0704	Main Shaft and Bearings
0704B	Gears
0704C	Countershaft and Reverse Idler Shaft
0706	Gear Shift Cover or Housing
0706A	Gear Shift Lever and Parts
0706B	Gear Shifter Rails and Parts
0706C	Gear Shifter Yokes or Forks

08 TRANSFER CASE GROUP

0800	Transmission Transfer Assembly
0801	Case
0802	Drive Gears, Shaft, Bearings
0803	Driven Gear, Shaft, Bearings
0804	Idler Gear, Shaft, Bearings
0804A	Declutch Shaft, Bearings and Parts
0805	Shifter Shafts
0805A	Yokes
0805B	Shift Levers
0805C	Declutch Lever and Parts
0809	Mountings
0810	Speedometer Drive Gears

09 PROPELLER SHAFT AND UNIVERSAL JOINT GROUP

0901	Propeller Shaft Assemblies
0902	Universal Joints

10 FRONT AXLE GROUP

1000	Front Axle Assembly
1001	Housing
1002	Differential and Carrier Assembly
1003	Differential Gears, Pinion and Bearings
1006	Steering Knuckle, Flange and Arm
1007	Axle Shafts, Universal Joints and Drive Flange

11 REAR AXLE GROUP

1100	Rear Axle Assembly
1101	Housing Assembly
1102	Axle Drive Shafts
1103	Differential and Carrier Assembly
1104	Differential Case Gears, Pinions and Bearings

12 BRAKE GROUP

1201	Hand Brake and/or Emergency Brake and Parts
1202	Shoes and Facings
1203	Brake Shoe Support
1203A	Guide Springs
1203C	Slack Adjusters
1203D	Brake Camshaft
1204	Pedal and Springs
1207A	Brake Diaphragm Chambers (Front)
1207B	Brake Diaphragm Chambers (Rear)
1209	Brake Lines
1209B	Hoses
1209C	Tubes, Clips and Tube Connectors
1209D	Brackets and Springs
1209E	Relay Valve
1209F	Foot Brake Valve
1209G	Quick Release Valve
1209H	Check Valves
1209J	Reservoir Tank
1209K	Safety Valve
1209L	Governor
1209M	Low Pressure Indicator
1209N	Cut-out Cock
1213	Air Compressor Assembly
1213A	Compressed Air Brake Controls

13 WHEELS, HUBS AND DRUM GROUP

1301	Wheels
1301A	Bearings
1301B	Seals
1301C	Retainers
1302	Hubs and Drums
1302A	Wheel Studs and Nuts

14 STEERING GROUP

1401	Steering Connecting Rod Drag Link
1402	Tie Rod
1403	Gear Assembly
1403A	Steering Gear Parts
1404	Wheel Assembly
1405	Brackets

15 FRAME AND BRACKETS GROUP

1500	Frame and Brackets
1501	Towing Attachments
1501A	Lifting Attachments
1502	Pintle Hook
1507	Fifth-Wheel—Trailers

16 SPRINGS AND SHOCK ABSORBER GROUP

1601	Front Springs
1601A	Rear Springs
1601B	Auxiliary or Helper Springs
1601C	Spring Bumpers
1602	Shackles and Spring Mounting Parts
1603	Shock Absorbers and Mountings

17 FENDERS GROUP

1701	Fenders
1701A	Aprons
1703	Running Boards
1704	Hoods
1705	Miscellaneous Sheet Metal

18 BODY GROUP

1800A	Cab Assembly
1801	Body Mounting Parts
1802A	Body Panels
1803	Floor Mats and Seals
1803A	Floorboards and Toeboards
1804A	Cushions or Upholstery
1804B	Seat Adjusters and Supports
1805	Door Assemblies
1805A	Door Hinges and Parts
1805B	Door Locks
1805D	Door Handles
1805E	Door Window Control Mechanism
1805F	Door Dovetails
1805H	Deck Lid Assembly
1806	Sill Plates
1807	Body Inside Trim, Door Trim, Panels
1809	Instrument Panel and Dash
1810	Cowl Ventilator
1810A	Ventilating Units, Manual
1811	Windshield Assembly
1811B	Windshield Frame Molding and Seals

STANDARDIZED GOVERNMENT GROUPING — Continued

18 BODY GROUP — Continued

1811C	Windshield Wiper Assembly
1811D	Windshield Wiper Parts and Tubing
1811E	Windshield Wiper Arms and Blade
1811F	Hood Catch
1812	Window Glass or Door Glass
1812A	Glass Channels
1812B	Moldings and Seals
1812C	Weatherstrips
1817	Tool Box
1820	Gun Supports and/or Brackets

21 GUARDS GROUP

2103	Radiator Guard
2103A	Light Guards

22 MISCELLANEOUS BODY, CHASSIS AND ACCESSORIES GROUP

2201	Tarpaulins
2201A	Bows
2201B	End Curtains
2201F	Side Curtains
2202	Rear View Mirrors
2203	Identification and Caution Plates
2203A	Reflector Jewel
2204	Speedometer and Parts
2205	Tachometer Assembly Parts
2206	Heater
2207	Defroster
2208B	Tire Inflation Device

26 RADIO GROUP

2603	Radio Suppression System Parts

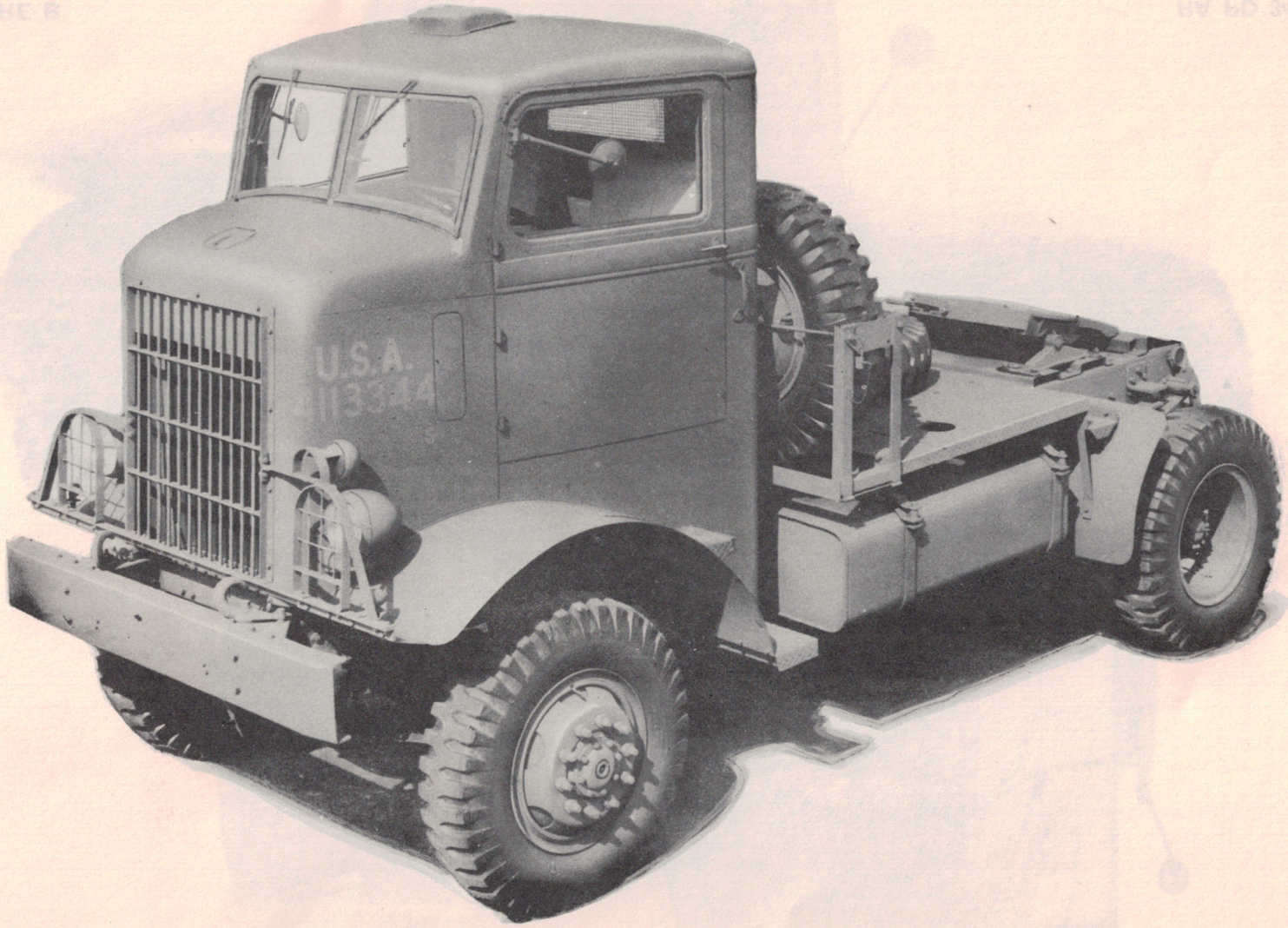

FIGURE A

RA PD 346136

TRUCK, 4 to 5-TON, 4 x 4, C. O. E., TRACTOR, AUTOCAR MODEL U-7144-T, WHITE MODEL 444

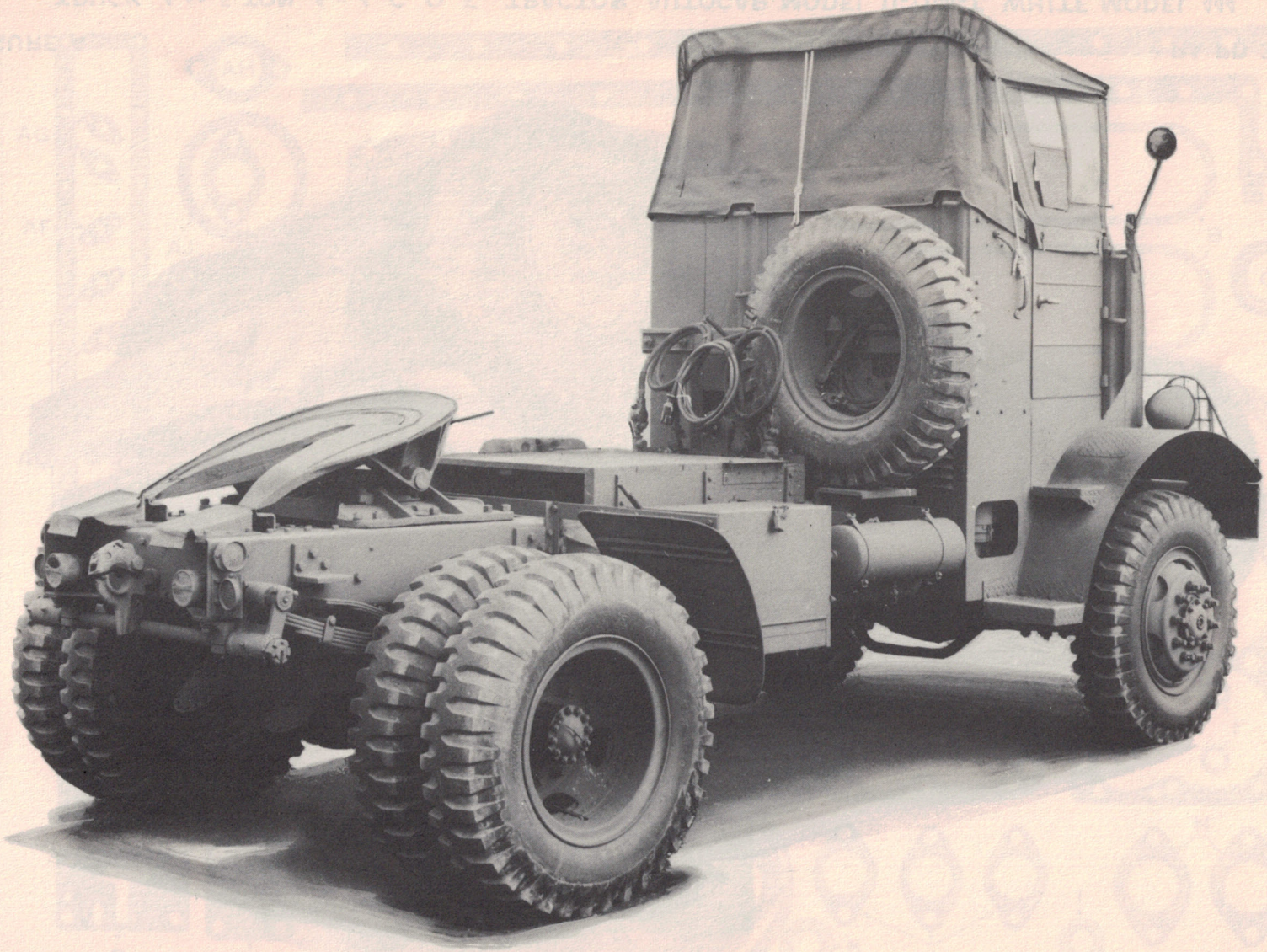

FIGURE B

RA PD 346137

TRUCK, 4 to 5-TON, 4 x 4, C. O. E., TRACTOR, AUTOCAR MODEL U-7144-T, WHITE MODEL 444



FIGURE C

RA PD 346138

TRUCK, 4 to 5-TON, 4 x 4, C. O. E., TRACTOR, AUTOCAR MODEL U-7144-T, WHITE MODEL 444

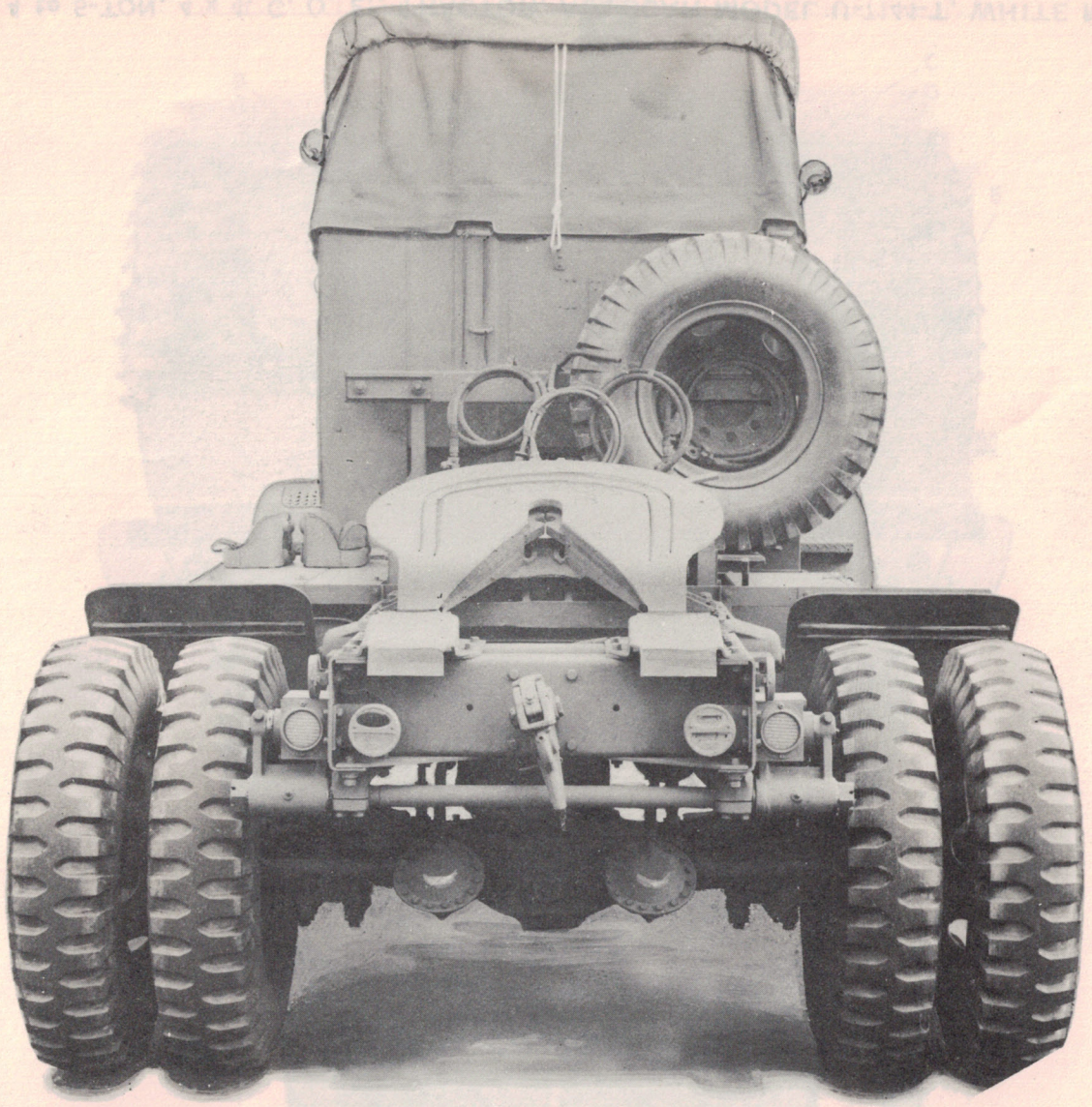

FIGURE D

RA PD 346139

TRUCK, 4 to 5-TON, 4 x 4, C. O. E., TRACTOR, AUTOCAR MODEL U-7144-T. WHITE MODEL 444

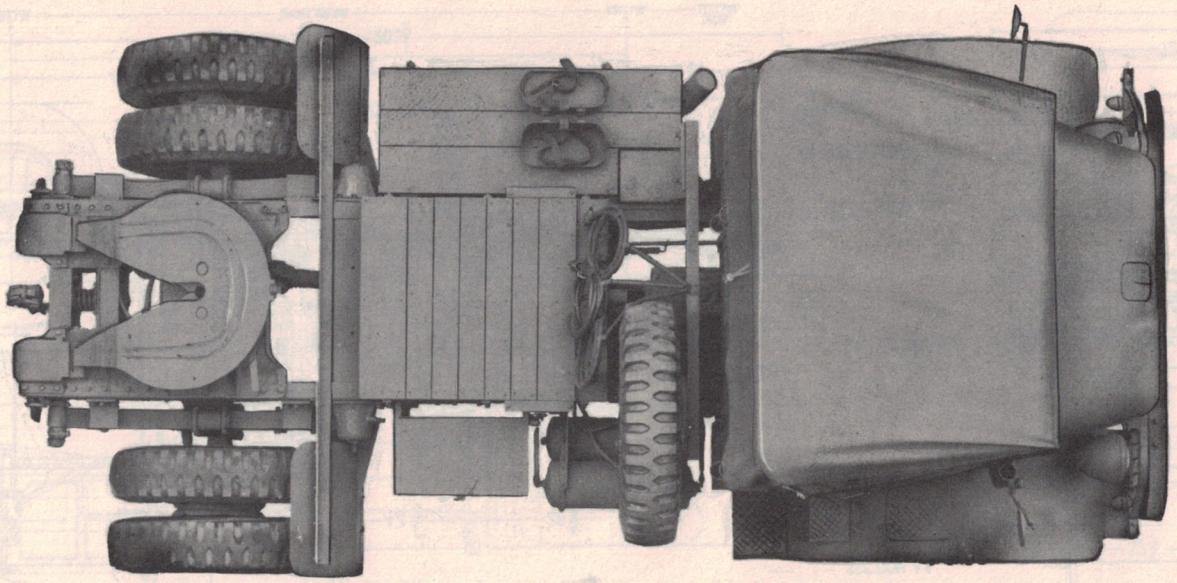

FIGURE E **RA PD 346140**

TRUCK, 4 to 5-TON, 4 x 4, C. O. E., TRACTOR, AUTOCAR MODEL U-7144-T, WHITE MODEL 444

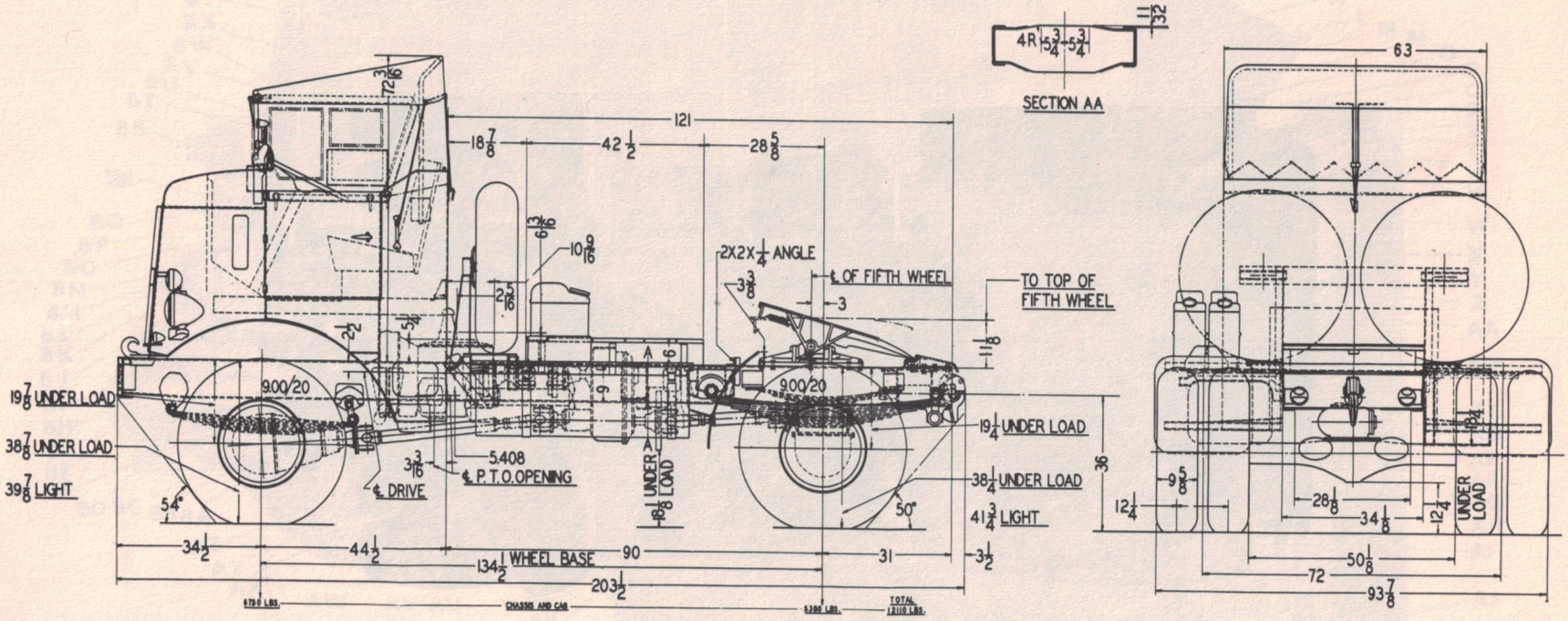

FIGURE F **DIMENSIONS** **RA PD 346141**

TRUCK, 4 to 5-TON, 4 x 4, C. O. E., TRACTOR, AUTOCAR MODEL U-7144-T, WHITE MODEL 444

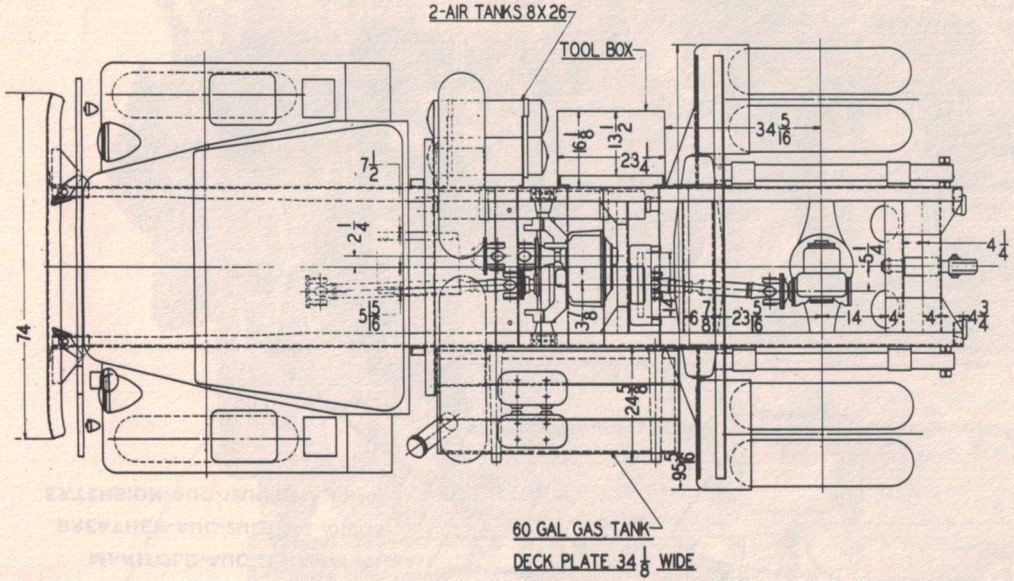

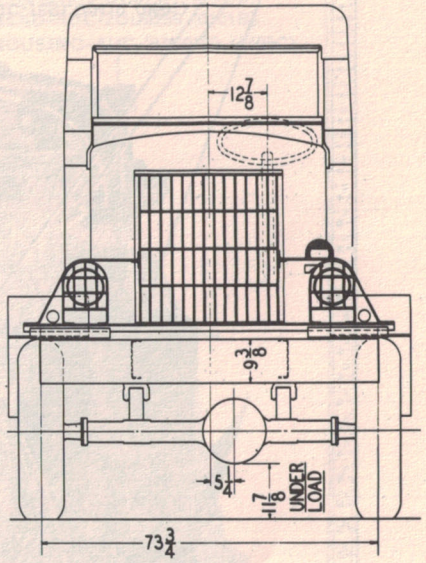

FIGURE G **DIMENSIONS** **RA PD 346142**

TRUCK, 4 to 5-TON, 4 x 4, C. O. E., TRACTOR, AUTOCAR MODEL U-7144-T, WHITE MODEL 444

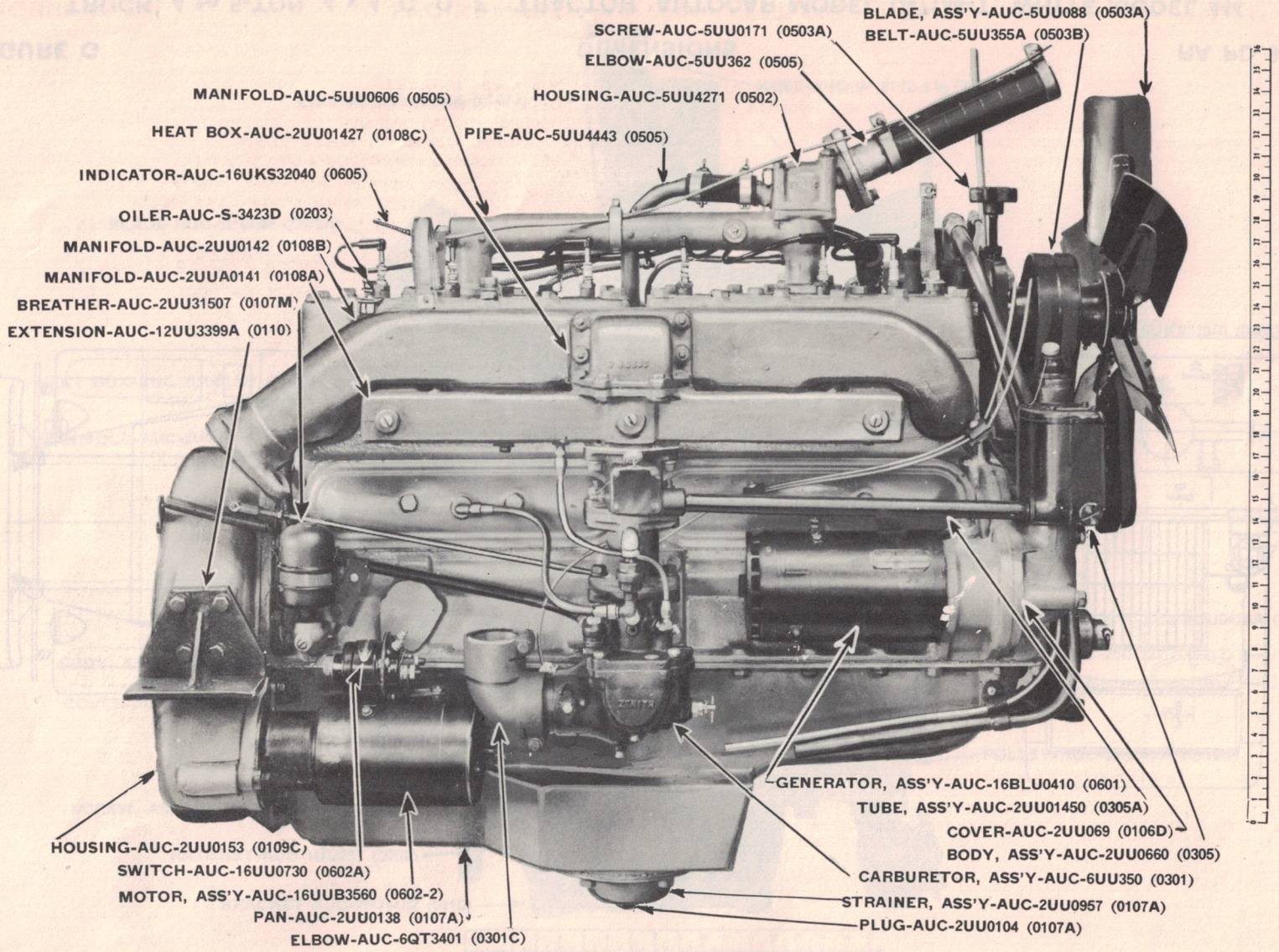

FIGURE 01-1 **ENGINE — DISMOUNTED — RIGHT SIDE VIEW** **RA PD 346143**

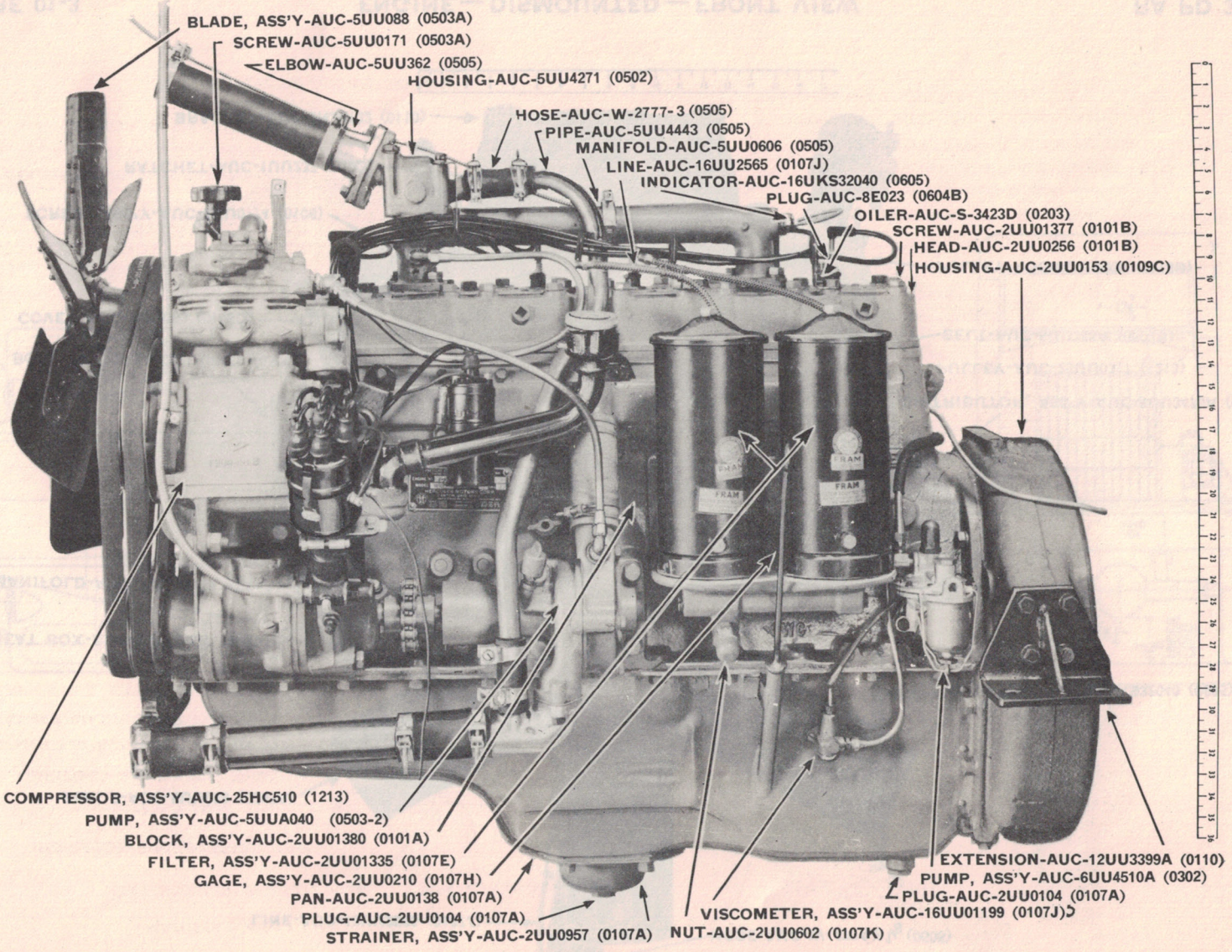

FIGURE 01-2 ENGINE — DISMOUNTED — LEFT SIDE VIEW RA PD 346144

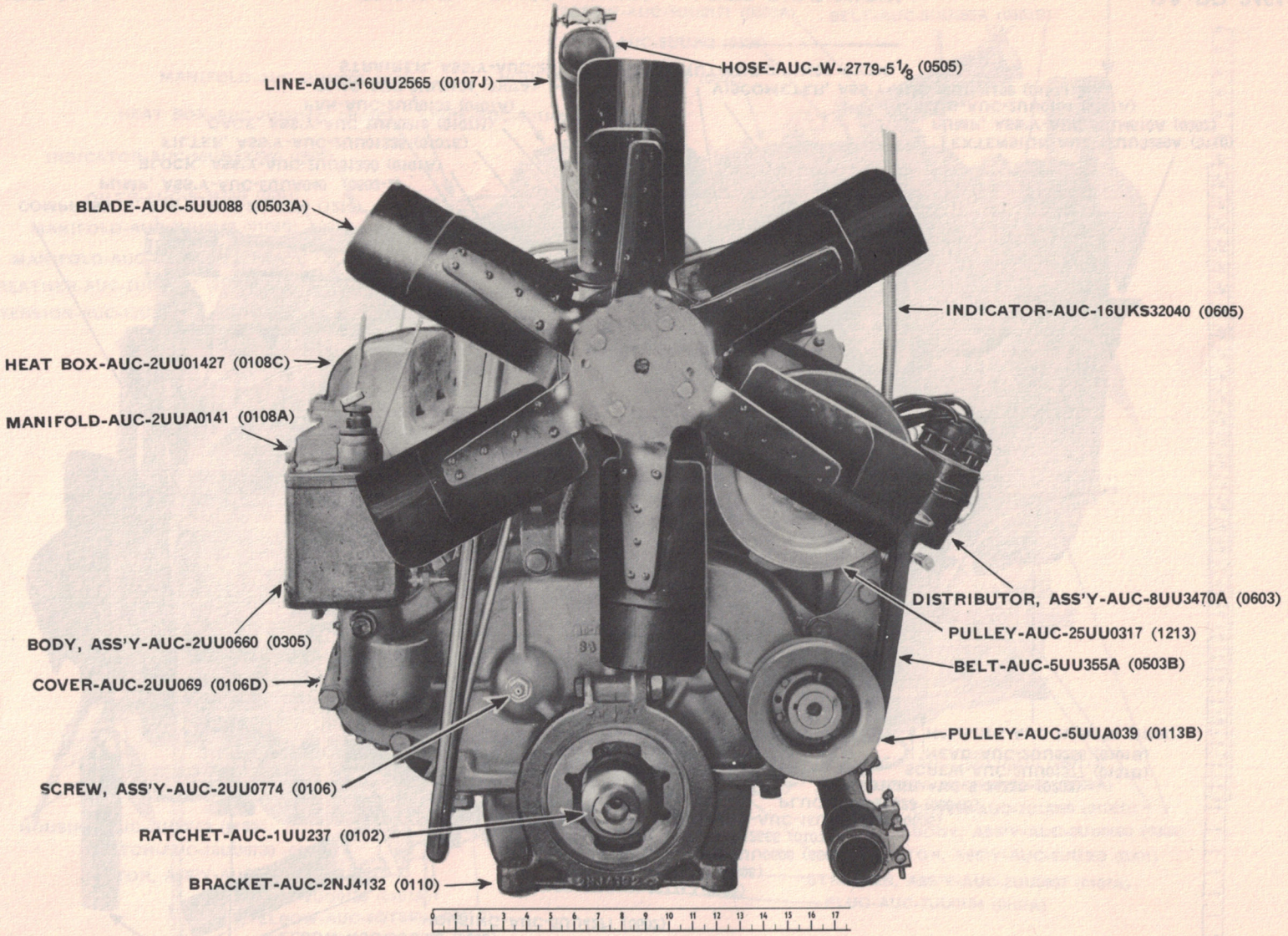

FIGURE 01-3 ENGINE — DISMOUNTED — FRONT VIEW RA PD 346145

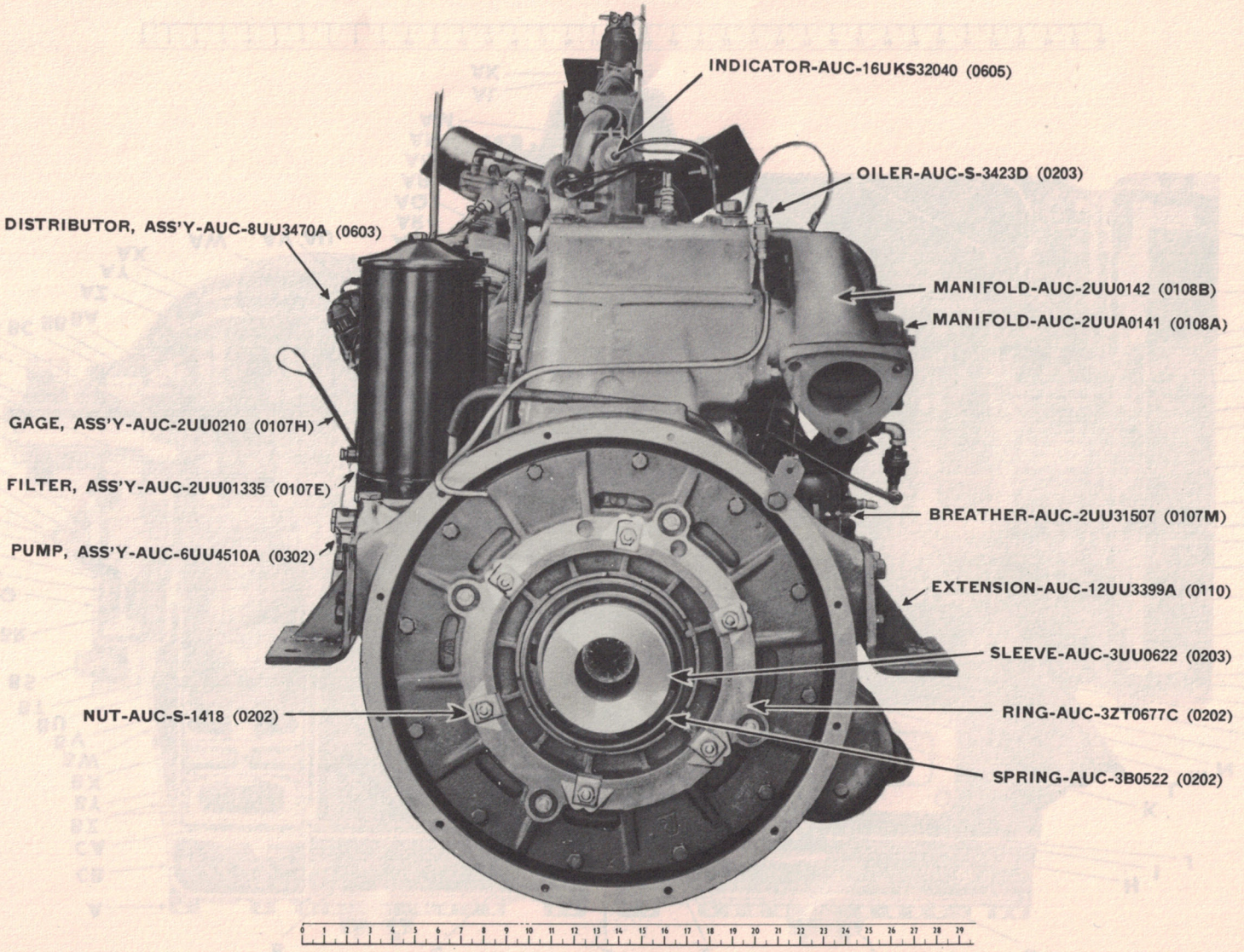

FIGURE 01-4 ENGINE — DISMOUNTED — REAR VIEW RA PD 346146

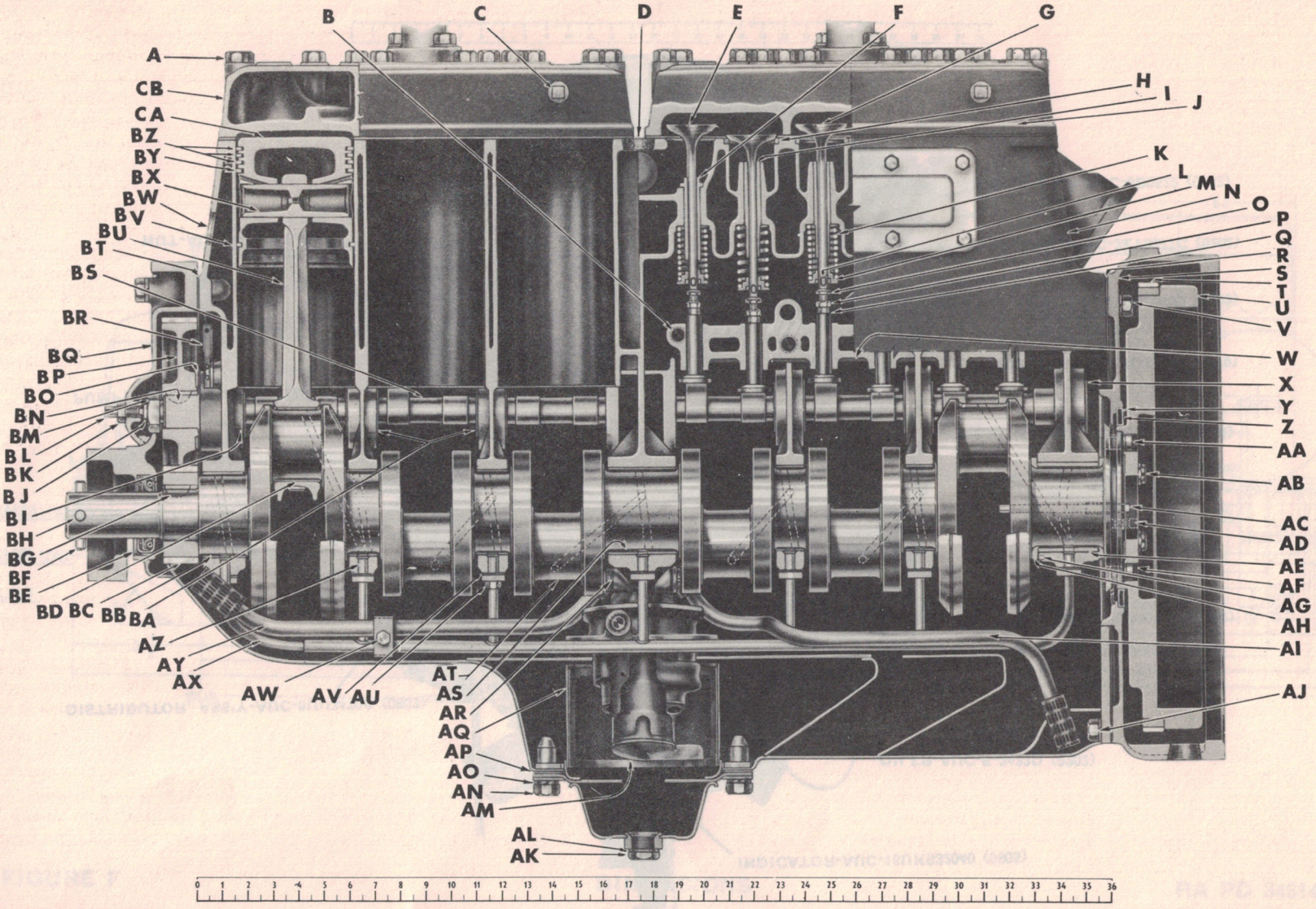

FIGURE 01-5 ENGINE—SIDE CROSS SECTIONAL VIEW RA PD 346147

FIGURE 01-5 ENGINE—SIDE CROSS SECTIONAL VIEW RA PD 346147A

KEY	ITEM	PART NO.	GROUP
A	SCREW, cap, cylinder head	AUC-2UU01377	0101B
B	PIN, dowel, valve tappet cluster	AUC-2UU01373	0105A
C	PLUG, pipe, cylinder head	AUC-S-4172	0101B
D	PLUG, pipe, cylinder	AUC-S-4189	0101A
E	VALVE, intake	AUC-2UU0710	0105
F	GUIDE, intake valve	AUC-2UU021	0105
G	VALVE, exhaust	AUC-2UU010	0105
H	INSERT, exhaust valve seat	AUC-2UUC01001	0105
I	GUIDE, exhaust valve	AUC-2UUA021	0105
J	GASKET, cylinder head	AUC-2UU007	0101B
K	SPRING, valve	AUC-2UU052	0105
L	PIN, valve spring seat	AUC-2UU0329	0105
M	SEAT, valve spring	AUC-2UU049	0105
N	PLUG, expansion, water jacket	AUC-2UU01338	0101A
O	SCREW, adjusting, valve tappet	AUC-2UU01368	0105A
P	NUT, valve tappet adjusting screw	AUC-2UU01369	0105A
Q	TAPPET, valve	AUC-2UU036	0105A
R	GASKET, flywheel housing	AUC-2TH0782	0109C
S	HOUSING, flywheel	AUC-2UU0153	0109C
T	GEAR, flywheel ring	AUC-2UU0214	0109B
U	FLYWHEEL	AUC-2UU006	0109
V	SCREW, cap, flywheel housing	AUC-S-25	0109C
W	CLUSTER, valve tappet	AUC-2UU01371	0105A
X	BEARING, camshaft, rear	AUC-2UUA044	0106A
Y	SCREW, flywheel housing oil seal	AUC-2UU01442	0109C
Z	OIL SEAL, flywheel housing	AUC-2UU01268	0109C
AA	PIN, dowel, flywheel	AUC-2TH0837	0109
AB	BOLT, engine flywheel	AUC-2UU0397	0109
AC	WICK, oil, crankshaft, assembly	AUC-2UU01225	0102
AD	PIN, locating, flywheel	AUC-2UU01356	0102
AE	BEARING, main, rear	AUC-2UU0657	0102A
AF	PLUG, expansion, flywheel	AUC-S-4207	0109
AG	PIN, dowel, rear main bearing flange	AUC-2UU01363	0102A
AH	FLANGE, main bearing, rear	AUC-2UU01362	0102A
AI	LINE, oil pump rear suction, assembly	AUC-2UU01407	0107J
AJ	SCREW, cap, flywheel housing	AUC-S-20	0109C
AK	PLUG, drain, magnetic, oil pan	AUC-2UU0104	0107A
AL	GASKET, oil pan drain plug	AUC-2UU01327	0107A
AM	PUMP, oil, assembly	AUC-2UU0150	0107
AN	SCREW, cap, oil strainer	AUC-S-20	0107A
AO	WASHER, lock, oil strainer	AUC-S-1349	0107A
AP	GASKET, oil strainer	AUC-2UU0377	0107A
AQ	STRAINER, oil, w/water TRAP, assembly	AUC-2UU0957	0107A
AR	GASKET, oil pump suction line flange	AUC-2UUA0578	0107J
AS	BEARING, main, center	AUC-2UU0655	0102A
AT	CRANKSHAFT	AUC-2UU001	0102
AU	SCREW, cap, oil pump main discharge pipe flange	AUC-S-14	0107J
AV	GASKET, oil pump main discharge pipe	AUC-2UU0578	0107J
AW	CLAMP, oil pump suction line	AUC-2UU01416	0107J
AX	PIPE, oil pump main discharge, assembly	AUC-2UUA0583	0107J
AY	LINE, oil pump front suction, assembly	AUC-2UU01406	0107J
AZ	BEARING, main, intermediate	AUC-2UU0653	0102A
BA	BEARING, camshaft, center	AUC-2UU043	0106A
BB	BEARING, main, front	AUC-2UU0651	0102A
BC	GEAR, crankshaft	AUC-2UU023	0106B
BD	BEARING, connecting rod	AUC-2UU0109	0104A
BE	OIL SEAL, crankshaft, front, assembly	AUC-2UU0962	0102
BF	PIN, crankshaft starting	AUC-S-1533	0102
BG	KEY, Woodruff, crankshaft gear	AUC-S-2316	0106B
BH	SCREW, set, starting crank pin	AUC-2UU01409	0102
BI	BEARING, camshaft, front	AUC-2UU044	0106A
BJ	PLUNGER, thrust, camshaft	AUC-2UU0776	0106
BK	NUT, adjusting, camshaft thrust plunger	AUC-2TH0775	0106
BL	SCREW, adjusting, camshaft thrust plunger, assembly	AUC-2UU0774	0106
BM	NUT, camshaft gear	AUC-2TH0698	0106B
BN	KEY, Woodruff, camshaft	AUC-S-2316	0106B
BO	WASHER, thrust, camshaft	AUC-2UU0652	0106
BP	GEAR, camshaft	AUC-2UU076	0106B
BQ	COVER, gear case	AUC-2UU069	0106D
BR	ORIFICE, oil, cylinder	AUC-2UU01345	0107J
BS	CAMSHAFT	AUC-2UU054	0106
BT	GASKET, gear case cover	AUC-2UU0178	0106D
BU	ROD, connecting, w/BEARINGS, assembly	AUC-2UU020	0104
BV	RING, compression, piston	AUC-2UU025	0103A
BW	PLUG, expansion, water jacket	AUC-2UU01338	0101A
BX	PIN, piston	AUC-2UU039	0103B
BY	RING, oil regulating, piston	AUC-2UU026	0103A
BZ	RING, compression, piston	AUC-2UU025	0103A
CA	PISTON	AUC-2UU027	0103
CB	HEAD, cylinder, front	AUC-2UU035	0101B

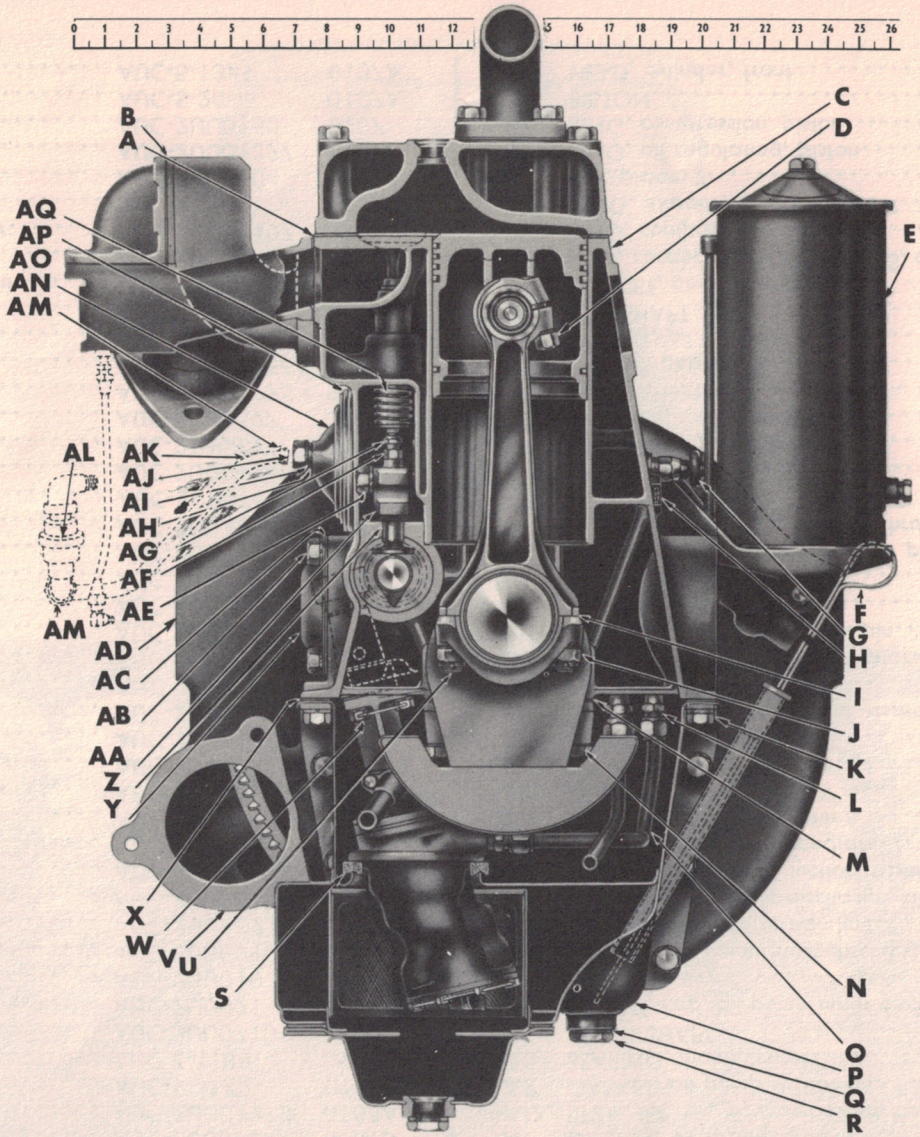

FIGURE 01-6 ENGINE—FRONT CROSS SECTIONAL VIEW RA PD 346148

222082 O - 52 - 3

Note Symbol	Official Stock Number	Figure Number	Part Number		ITEM	Quan. Reqd. per Unit Assy.	Unit Price
			Ordnance	Manufacturer			
Col. 1	Col. 2	Col. 3	Col. 4	Col. 5	Col. 6	Col. 7	Col. 8
					0101A — CYLINDER BLOCK		
	G509-0122591	01-8, 9, 10		AUC-2UU002	BLOCK, engine cylinder, w/CRANKCASE (HM-16356E)	1	
		01-2, 6		AUC-2UU01380	BLOCK, engine cylinder, w/CRANKCASE, assembly (HM-17989AS)	1	
					(Composed of:		
				AUC-2UU043	4 BEARING, camshaft, center		
				AUC-2UU044	1 BEARING, camshaft, front		
				AUC-2UUA044	1 BEARING, camshaft, rear		
				AUC-2UUA0213	1 BEARING, idler shaft		
				AUC-2UU002	1 BLOCK, cylinder, w/CRANKCASE		
				AUC-2UU0594	1 CAP, main bearing, center		
				AUC-2UU0595	1 CAP, main bearing, front		
				AUC-2UU0596	4 CAP, main bearing, intermediate		
				AUC-2UU0593	1 CAP, main bearing, rear		
				AUC-2UUA021	6 GUIDE, valve, exhaust		
				AUC-2UU021	6 GUIDE, valve, intake		
				AUC-2UU027	6 PISTON, std.		
				AUC-2UU025	24 RING, piston, compression, std.		
				AUC-2UU026	6 RING, piston, oil regulating, std.)		
	4300-8082A	01-6		AUC-2UU01339	COCK, drain, engine cylinder block (HM-8082A)	1	
	G067-1200309	01-9		AUC-2UU074	COVER, engine fuel pump opening (HM-4879A)	1	
H-1	H001-1013015		193988	AUC-S-7460	SCREW, cap, hex-hd., S., 5/16-18NC-2 x 1/2	2	
H-1	H001-1518008		103320	AUC-S-1346	WASHER, lock, reg., S., 5/16 in.	2	
	4300-15187A	01-6		AUC-2UU01352	COVER, engine governor hole (HM-15187A)	1	
H-1	H001-1013068	01-6	216982	AUC-S-4064	SCREW, cap, hex-hd., S., 1/2-13NC-2 x 3/4	4	
H-1	H001-1518011		103323	AUC-S-1349	WASHER, lock, reg., S., 1/2 in.	4	
	4300-15188A	01-6, 7		AUC-2UU01353	GASKET, engine governor hole cover (HM-15188A) (part of GASKET SET, AUC-2UU01200B)	1	
	G509-0382830			AUC-2UU01359	OIL SEAL, engine generator, cork (crankcase) (HM-4790A) (part of GASKET SET, AUC-2UU01200B)	1	
	G120-0155685			AUC-2UU01356	PIN, engine oil pressure regulator (HM-2129A)	1	
H-6	H006-0282430	01-6	501591	AUC-S-4207	PLUG, expansion, S., 5/8 (engine cylinder block) (HM-665A)	5	
	4300-2534A	01-5		AUC-2UU01338	PLUG, expansion, br., 1 1/4 (engine water jacket) (HM-2534A)	2	
H-6	H006-0283415		103875	AUC-S-617	PLUG, pipe, C.I., std., ck., black, 3/4 in. (engine cylinder block) (HM-565A)	4	
H-6	H006-0283420	01-5	103876	AUC-S-4189	PLUG, pipe, C.I., std., ck., black, 1 in. (engine cylinder block)	1	
H-6	H006-0283985		A144588	AUC-S-4748	PLUG, pipe, slotted-hd., S., glvd., 1/4 in. (engine oil pressure line) (HM-60A)	2	

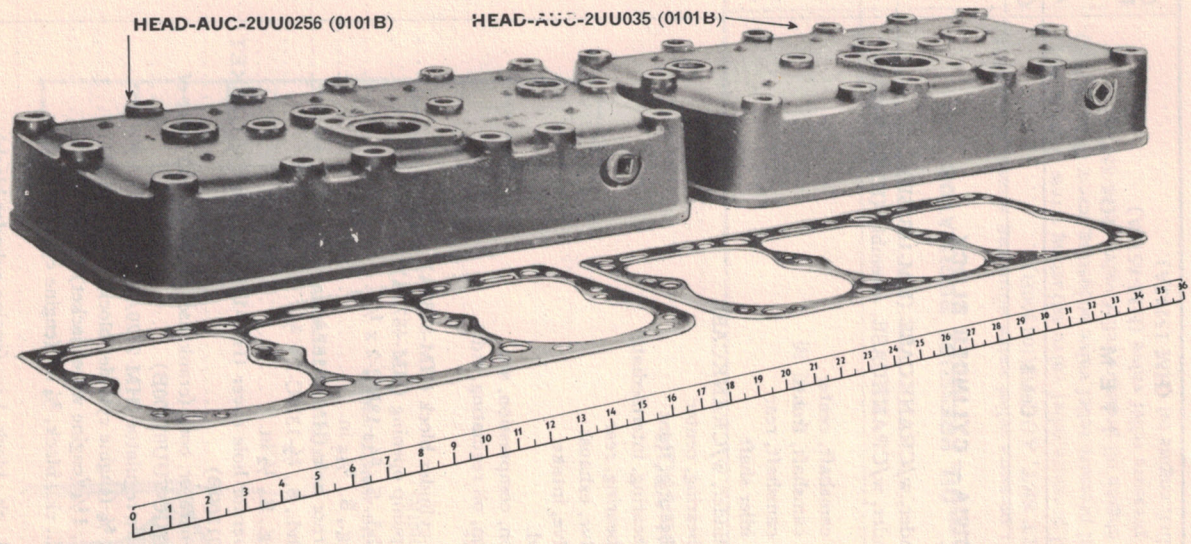

FIGURE 01-11 ENGINE CYLINDER HEADS RA PD 346153

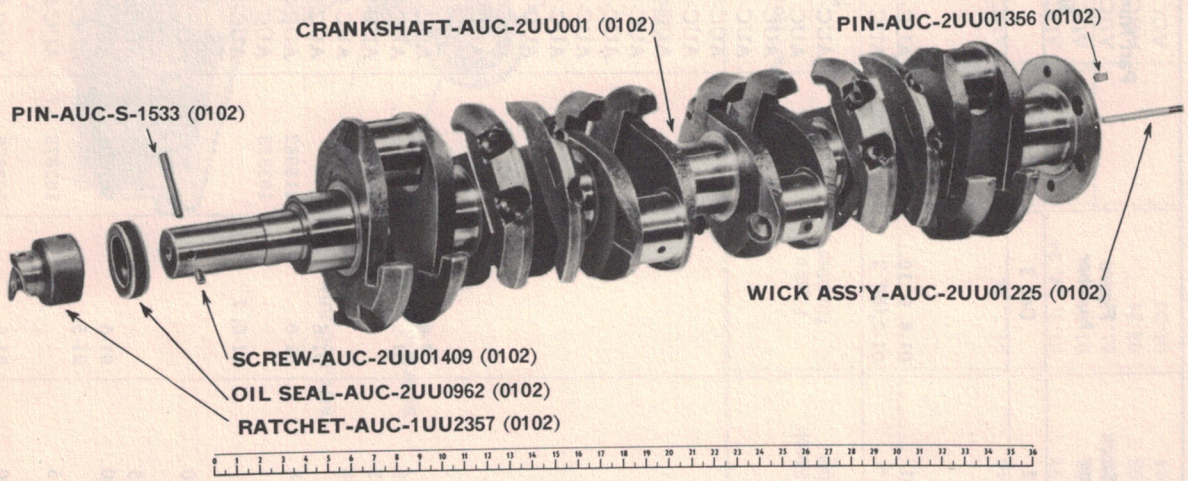

FIGURE 01-12 ENGINE CRANKSHAFT RA PD 346154

Note Symbol	Official Stock Number	Figure Number	Part Number		ITEM	Quan. Reqd. per Unit Assy.	Unit Price
			Ordnance	Manufacturer			
Col. 1	Col. 2	Col. 3	Col. 4	Col. 5	Col. 6	Col. 7	Col. 8
					0101B — CYLINDER HEAD		
	G510-0194032	01-5, 6, 7		AUC-2UU007	GASKET, engine cylinder head (HM-17224C) (part of GASKET SETS, AUC-2UU01200B and AUC-2UU01390A)	2	
	G509-0207126	01-5, 11		AUC-2UU035	HEAD, engine cylinder, front (HM-17214D)	1	
				AUC-S-2013C	NUT, jam, heavy, hex., s-fin., S., cd-pltd., ½-13NC-2	1	
	G510-0381991			AUC-2UU01377	SCREW, cap, hex-hd., S., ½-13NC-2 x 3⅝	15	
				AUC-2UU2151A	STUD, engine cylinder head bonding	1	
				AUC-S-995C	WASHER, plain, S., cd-pltd., ½ in. (17/32 in. I.D. x 1 in. O.D. x 1/16 in. thick)	1	
	G509-0207137	01-2, 11		AUC-2UU0256	HEAD, engine cylinder, rear (HM-17215D)	1	
				AUC-S-2013C	NUT, jam, heavy, hex., s-fin., S., cd-pltd., ½-13NC-2	1	
	G510-0381991	01-2, 5		AUC-2UU01377	SCREW, cap, hex-hd., S., ½-13NC-2 x 3⅝	15	
				AUC-2UU2151A	STUD, engine cylinder head bonding	1	
				AUC-S-995C	WASHER, plain, S., cd-pltd., ½ in. (17/32 in. I.D. x 1 in.O.D. x 1/16 in. thick)	1	
H-6	H006-0283410	01-5	103874	AUC-S-4172	PLUG, pipe, C.I., std., ck., black, ½ in. (engine cylinder head)	2	
					0102 — CRANKSHAFT		
	G509-0141451	01-5, 12		AUC-2UU001	CRANKSHAFT, engine (HM-17527E)	1	
H-13	H013-0500099	01-5, 7, 12		AUC-2UU0962	OIL SEAL, engine crankshaft, front, assembly (HM-11137AS) (part of GASKET SET, AUC-2UU01200B)	1	
	G120-0155685	01-5, 12		AUC-2UU01356	PIN, locating, engine flywheel (knurled) (HM-2129A)	1	
	G156-0338700			AUC-2UU01408	PIN, starting, engine crankshaft (HM-1675A) (superseded by PIN, AUC-S-1533)	1	
	G156-0338700	01-5, 12		AUC-S-1533	PIN, straight, cold-fin., S., ⅜ x 2⅝ (engine crankshaft starting) (HM-1675A) (supersedes PIN, AUC-2UU01408)	1	
		01-3, 12		AUC-1UU237	RATCHET, engine starting crank	1	
	G156-0382079	01-5, 12		AUC-2UU01409	SCREW, set, engine starting crank pin (HM-1739A)	1	
	G509-0386245			AUC-A-1001	SLEEVE, oil wick, engine crankshaft (HM-14933A) (superseded by WICK, assembly, AUC-2UU01225)	1	
				AUC-2UUA01225	WICK, oil, engine crankshaft (HM-14625) (superseded by WICK, AUC-A-1002)	1	
				AUC-A-1002	WICK, oil, engine crankshaft (HM-14626A) (superseded by WICK, assembly, AUC-2UU01225)	1	
	G120-0447450	01-5, 12		AUC-2UU01225	WICK, oil, engine crankshaft, assembly (HM-14626AS) (supersedes SLEEVE, AUC-A-1001 and WICK, AUC-A-1002)	1	
					(Composed of:		
				AUC-A-1001	1 SLEEVE		
				AUC-A-1002	1 WICK)		

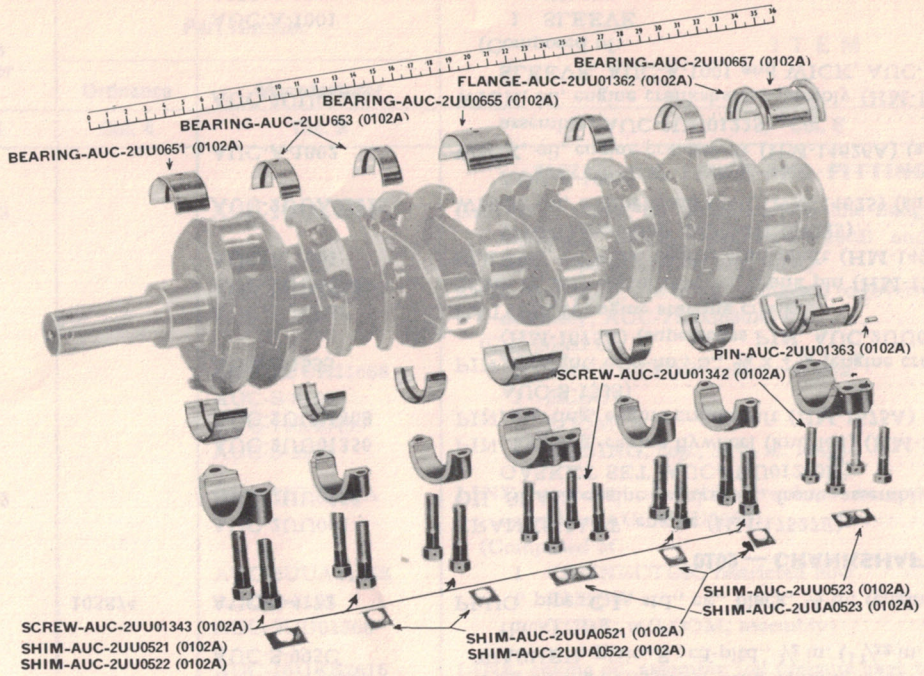

FIGURE 01-13 **ENGINE CRANKSHAFT BEARINGS** **RA PD 346155**

Note Symbol	Official Stock Number	Figure Number	Part Number		ITEM	Quan. Reqd. per Unit Assy.	Unit Price
			Ordnance	Manufacturer			
Col. 1	Col. 2	Col. 3	Col. 4	Col. 5	Col. 6	Col. 7	Col. 8
					0102A — CRANKSHAFT BEARINGS		
	G509-0117217	01-5, 13		AUC-2UU0655	BEARING, engine main, center, std. (HM-17072B) (part of BEARING SET, AUC-2B01477AS)	2	
				AUC-2UU0516	BEARING, engine main, center, .020 U/S (part of BEARING SET, AUC-2B01479AS)	2	
				AUC-2UU0517	BEARING, engine main, center, .030 U/S (part of BEARING SET, AUC-2B01481AS)	2	

G509-0117228	01-5, 13		AUC-2UU0651	BEARING, engine main, front, std. (HM-17071B) (part of BEARING SET, AUC-2B01477AS)	2
			AUC-2UU0512	BEARING, engine main, front, .020 U/S (part of BEARING SET, AUC-2B01479AS)	2
			AUC-2UU0513	BEARING, engine main, front, .030 U/S (part of BEARING SET, AUC-2B01481AS)	2
G509-0117240	01-5, 13		AUC-2UU0653	BEARING, engine main, intermediate, std. (HM-17074B) (part of BEARING SET, AUC-2B01477AS)	8
			AUC-2UU0514	BEARING, engine main, intermediate, .020 U/S (part of BEARING SET, AUC-2B01479AS)	8
			AUC-2UU0515	BEARING, engine main, intermediate, .030 U/S (part of BEARING SET, AUC-2B01481AS)	8
G509-0117265	01-5, 13		AUC-2UU0657	BEARING, engine main, rear, std. (HM-17073B) (part of BEARING SET, AUC-2B01477AS)	2
			AUC-2UU0509	BEARING, engine main, rear, .020 U/S (part of BEARING SET, AUC-2B01479AS)	2
			AUC-2UU0511	BEARING, engine main, rear, .030 U/S (part of BEARING SET, AUC-2B01481AS)	2
			AUC-2B01477S	BEARING SET, engine crankshaft, main, std. (HM-17991AS) (superseded by BEARING SET, AUC-2B01477AS)	1
				(Composed of:	
			AUC-2UU0655	2 BEARING, center, std.	
			AUC-2UU0651	2 BEARING, front, std.	
			AUC-2UU0653	8 BEARING, intermediate, std.	
			AUC-2UU0657	2 BEARING, rear, std.	
			AUC-2UU01362	4 FLANGE, main bearing, rear	
			AUC-2UU01363	4 PIN, dowel, rear main bearing flange)	
			AUC-2B01477AS	BEARING SET, engine crankshaft, main, std. (supersedes BEARING SET, AUC-2B01477S and SHIM SET, AUC-2UU01496)	1
				(Composed of:	
			AUC-2UU0655	2 BEARING, center, std.	
			AUC-2UU0651	2 BEARING, front, std.	
			AUC-2UU0653	8 BEARING, intermediate, std.	
			AUC-2UU0657	2 BEARING, rear, std.	
			AUC-2UU01362	4 FLANGE, main bearing, rear	
			AUC-2UU01363	4 PIN, dowel, rear main bearing flange	
			AUC-2UU0523	8 SHIM, center and rear, .002	
			AUC-2UUA0523	8 SHIM, center and rear, .003	
			AUC-2UU0521	4 SHIM, front, .002	
			AUC-2UU0522	4 SHIM, front, .003	
			AUC-2UUA0521	16 SHIM, intermediate, .002	
			AUC-2UUA0522	16 SHIM, intermediate, .003)	

Afd. DOCUMENTATIE
37
Datum 22 juni 1960
Par.

Note Symbol	Official Stock Number	Figure Number	Part Number		ITEM	Quan. Reqd. per Unit Assy.	Unit Price
			Ordnance	Manufacturer			
Col. 1	Col. 2	Col. 3	Col. 4	Col. 5	Col. 6	Col. 7	Col. 8
					0102A — CRANKSHAFT BEARINGS — Continued		
				AUC-2B01479S	BEARING SET, engine crankshaft, main, .020 U/S (superseded by BEARING SET, AUC-2B01479AS)	1	
					(Composed of:		
				AUC-2UU0516	2 BEARING, center, .020 U/S		
				AUC-2UU0512	2 BEARING, front, .020 U/S		
				AUC-2UU0514	8 BEARING, intermediate, .020 U/S		
				AUC-2UU0509	2 BEARING, rear, .020 U/S		
				AUC-2UU01362	4 FLANGE, main bearing, rear		
				AUC-2UU01363	4 PIN, dowel, rear main bearing flange)		
	G510-7035034			AUC-2B01479AS	BEARING SET, engine crankshaft, main, .020 U/S (supersedes BEARING SET, AUC-2B01479S and SHIM SET, AUC-2UU01496)	1	
					(Composed of:		
				AUC-2UU0516	2 BEARING, center, .020 U/S		
				AUC-2UU0512	2 BEARING, front, .020 U/S		
				AUC-2UU0514	8 BEARING, intermediate, .020 U/S		
				AUC-2UU0509	2 BEARING, rear, .020 U/S		
				AUC-2UU01362	4 FLANGE, main bearing, rear		
				AUC-2UU01363	4 PIN, dowel, rear main bearing flange		
				AUC-2UU0523	8 SHIM, center and rear, .002		
				AUC-2UUA0523	8 SHIM, center and rear, .003		
				AUC-2UU0521	4 SHIM, front, .002		
				AUC-2UU0522	4 SHIM, front, .003		
				AUC-2UUA0521	16 SHIM, intermediate, .002		
				AUC-2UUA0522	16 SHIM, intermediate, .003)		
				AUC-2B01481S	BEARING SET, engine crankshaft, main, .030 U/S (superseded by BEARING SET, AUC-2B01481AS)	1	
					(Composed of:		
				AUC-2UU0517	2 BEARING, center, .030 U/S		
				AUC-2UU0513	2 BEARING, front, .030 U/S		
				AUC-2UU0515	8 BEARING, intermediate, .030 U/S		
				AUC-2UU0511	2 BEARING, rear, .030 U/S		
				AUC-2UU01362	4 FLANGE, main bearing, rear		
				AUC-2UU01363	4 PIN, dowel, rear main bearing flange)		
	G510-7035080			AUC-2B01481AS	BEARING SET, engine crankshaft, main, .030 U/S (supersedes BEARING SET, AUC-2B01481S and SHIM SET, AUC-2UU01496)	1	

				(Composed of:	
			AUC-2UU0517	2 BEARING, center, .030 U/S	
			AUC-2UU0513	2 BEARING, front, .030 U/S	
			AUC-2UU0515	8 BEARING, intermediate, .030 U/S	
			AUC-2UU0511	2 BEARING, rear, .030 U/S	
			AUC-2UU01362	4 FLANGE, main bearing, rear	
			AUC-2UU01363	4 PIN, dowel, rear main bearing flange	
			AUC-2UU0523	8 SHIM, center and rear, .002	
			AUC-2UUA0523	8 SHIM, center and rear, .003	
			AUC-2UU0521	4 SHIM, front, .002	
			AUC-2UU0522	4 SHIM, front, .003	
			AUC-2UUA0521	16 SHIM, intermediate, .002	
			AUC-2UUA0522	16 SHIM, intermediate, .003)	
	G509-0184601	01-5, 10, 13	AUC-2UU01362	FLANGE, engine main bearing, rear (HM-80172A) (part of BEARING SETS, AUC-2B01477AS, AUC-2B01479AS and AUC-2B01481AS)...	4
	G509-0155762	01-5, 8, 10, 13	AUC-2UU01363	PIN, dowel, engine rear main bearing flange (HM-4765A) (part of BEARING SETS, AUC-2B01477AS, AUC-2B01479AS and AUC-2B01481AS).....	4
	G509-0382140	01-6, 13	AUC-2UU01342	SCREW, engine main bearing, center and rear (HM-1703A).....	8
	G509-0382141	01-13	AUC-2UU01343	SCREW, engine main bearing, front and intermediate (HM-15103A)....	10
	G509-0384602	01-6, 13	AUC-2UU0523	SHIM, engine main bearing, center and rear, .002 (HM-80168A) (part of BEARING SETS, AUC-2B01477AS, AUC-2B01479AS and AUC-2B01481AS).....	AR
	G509-0384683	01-13	AUC-2UUA0523	SHIM, engine main bearing, center and rear, .003 (HM-80169A) (part of BEARING SETS, AUC-2B01477AS, AUC-2B01479AS and AUC-2B01481AS).....	AR
	G-509-0384679	01-13	AUC-2UU0521	SHIM, engine main bearing, front, .002 (HM-80164A) (part of BEARING SETS, AUC-2B01477AS, AUC-2B01479AS and AUC-2B01481AS)...	AR
	4300-80165A	01-13	AUC-2UU0522	SHIM, engine main bearing, front, .003 (HM-80165A) (part of BEARING SETS, AUC-2B01477AS, AUC-2B01479AS and AUC-2B01481AS)...	AR
	G509-0384678	01-13	AUC-2UUA0521	SHIM, engine main bearing, intermediate, .002 (HM-80166A) (part of BEARING SETS, AUC-2B01477AS, AUC-2B01479AS and AUC-2B01481AS).....	AR
	G509-0384681	01-13	AUC-2UUA0522	SHIM, engine main bearing, intermediate, .003 (HM-80167A) (part of BEARING SETS, AUC-2B01477AS, AUC-2B01479AS and AUC-2B01481AS).....	AR
			AUC-2UU01496	SHIM SET, engine crankshaft bearing (superseded by BEARING SETS, AUC-2B01477AS, AUC-2B01479AS and AUC-2B01481AS).....	1
				(Composed of:	
			AUC-2UU0523	8 SHIM, center and rear, .002	
			AUC-2UUA0523	8 SHIM, center and rear, .003	
			AUC-2UU0521	4 SHIM, front, .002	
			AUC-2UU0522	4 SHIM, front, .003	
			AUC-2UUA0521	16 SHIM, intermediate, .002	
			AUC-2UUA0522	16 SHIM, intermediate, .003)	

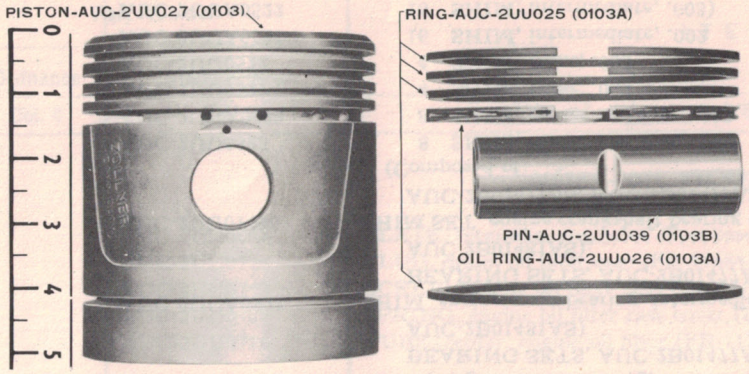

FIGURE 01-14 PISTON, PISTON RINGS AND PINS RA PD 346156

Note Symbol	Official Stock Number	Figure Number	Part Number		ITEM	Quan. Reqd. per Unit Assy.	Unit Price
			Ordnance	Manufacturer			
Col. 1	Col. 2	Col. 3	Col. 4	Col. 5	Col. 6	Col. 7	Col. 8
					0103 — PISTONS		
	G509-0334900	01-5, 14		AUC-2UU027	PISTON, engine, std. (HM-17113C) (superseded by PISTON, w/PIN, assembly, AUC-2UU01471)	6	
				AUC-2UU0873	PISTON, engine, .020 O/S (superseded by PISTON, w/PIN, assembly, AUC-2UU01473)	6	
				AUC-2UU0862	PISTON, engine, .040 O/S (superseded by PISTON, w/PIN, assembly, AUC-2UU01483)	6	
	0600-2UU01471			AUC-2UU01471	PISTON, engine, w/PIN fitted, assembly, std. (HM-17713AS) (supersedes PIN, AUC-2UU039 and PISTON, AUC-2UU027)	6	
	G510-7035054			AUC-2UU01473	PISTON, engine, w/PIN fitted, assembly, .020 O/S (supersedes PIN, AUC-2UU039 and PISTON, AUC-2UU0873)	6	
	G510-7035055			AUC-2UU01483	PISTON, engine, w/PIN fitted, assembly, .040 O/S (supersedes PIN, AUC-2UU039 and PISTON, AUC-2UU0862)	6	
					0103A — RINGS		
	G509-0369303	01-5, 14		AUC-2UU025	RING, compression, engine piston, std. (HM-3824A) (part of RING SET, AUC-2UU01382)	24	
				AUC-2UU0875	RING, compression, engine piston, .020 O/S (part of RING SET, AUC-2UU01383)	24	

				AUC-2UU0863	RING, compression, engine piston, .040 O/S (part of RING SET, AUC-2UU01389)	24
	4300-3923A	01-5, 14		AUC-2UU026	RING, oil regulating, engine piston, std. (HM-3923A) (part of RING SET, AUC-2UU01382)	6
				AUC-2UU0877	RING, oil regulating, engine piston, .020 O/S (part of RING SET, AUC-2UU01383)	6
				AUC-2UU0879	RING, oil regulating, engine piston, .040 O/S (part of RING SET, AUC-2UU01389)	6
	0600-2UU01382			AUC-2UU01382	RING SET, engine piston, std. (supersedes RING SETS, AUC-2UU025S and AUC-2UU026S)	1
					(Composed of:	
				AUC-2UU025	24 RING, compression, std.	
				AUC-2UU026	6 RING, oil regulating, std.)	
	0600-2UU01383			AUC-2UU01383	RING SET, engine piston, .020 O/S (supersedes RING SETS, AUC-2UU0875S and AUC-2UU0877S)	1
					(Composed of:	
				AUC-2UU0875	24 RING, compression, .020 O/S	
				AUC-2UU0877	6 RING, oil regulating, .020 O/S)	
	0600-2UU01389					
				AUC-2UU01389	RING SET, engine piston, .040 O/S (supersedes RING SETS, AUC-2UU0863S and AUC-2UU0879S)	1
					(Composed of:	
				AUC-2UU0863	24 RING, compression, .040 O/S	
				AUC-2UU0879	6 RING, oil regulating, .040 O/S)	
				AUC-2UU025S	RING SET, engine piston compression, std. (superseded by RING SET, AUC-2UU01382)	1
					(Composed of:	
				AUC-2UU025	24 RING)	
				AUC-2UU0875S	RING SET, engine piston compression, .020 O/S (superseded by RING SET, AUC-2UU01383)	1
					(Composed of:	
				AUC-2UU0875	24 RING)	
				AUC-2UU0863S	RING SET, engine piston compression, .040 O/S (superseded by RING SET, AUC-2UU01389)	1
					(Composed of:	
				AUC-2UU0863	24 RING)	
				AUC-2UU026S	RING SET, engine piston oil regulating std. (superseded by RING SET, AUC-2UU01382)	1
					(Composed of:	
				AUC-2UU026	6 RING)	

Note Symbol	Official Stock Number	Figure Number	Part Number		ITEM	Quan. Reqd. per Unit Assy.	Unit Price
			Ordnance	Manufacturer			
Col. 1	Col. 2	Col. 3	Col. 4	Col. 5	Col. 6	Col. 7	Col. 8
					0103A — RINGS — Continued		
				AUC-2UU0877S	RING SET, engine piston oil regulating, .020 O/S (superseded by RING SET, AUC-2UU01383)	1	
					(Composed of:		
				AUC-2UU0877	6 RING)		
				AUC-2UU0879S	RING SET, engine piston oil regulating, .040 O/S (superseded by RING SET, AUC-2UU01389)	1	
					(Composed of:		
				AUC-2UU0879	6 RING)		
					0103B — PISTON PINS		
	G509-0338703	01-5, 14		AUC-2UU039	PIN, engine piston, std. (HM-15929B) (superseded by PISTON, w/PIN, assemblies, AUC-2UU01471, AUC-2UU01473 and AUC-2UU01483)	6	
				AUC-2UUA0447	PIN, engine piston, .005 O/S	6	

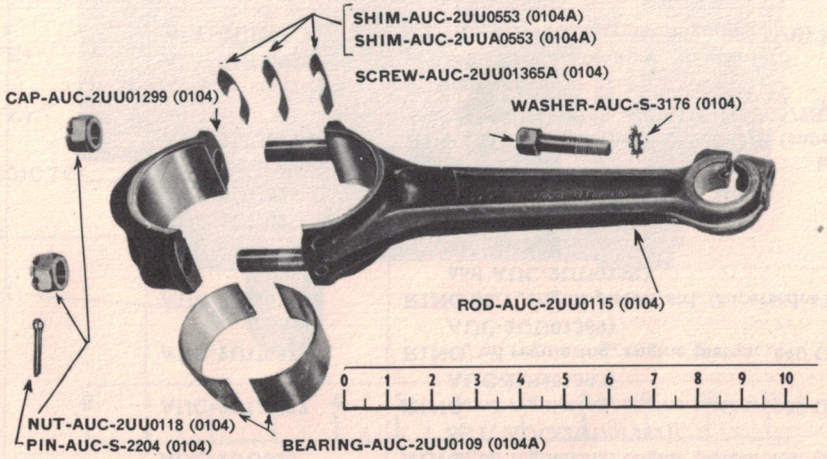

FIGURE 01-15 CONNECTING RODS AND BEARINGS RA PD 346157

					0104 — CONNECTING RODS	
	G509-0314477	01-6		AUC-2UU0118	NUT, engine connecting rod cap stud (HM-7056A)	12
H-1	H001-0811052	01-6, 15	103385	AUC-S-2204	PIN, cotter, split, S., 1/8 x 1 (engine connecting rod cap stud)	12
	G509-0370725	01-5		AUC-2UU020	ROD, connecting, engine, w/BEARINGS, assembly (HM-17076AS) (superseded by ROD, w/o BEARINGS, assembly, AUC-2UUA0115, with addition of required bearings)	6
				AUC-2UUA0115	ROD, connecting, engine, w/o BEARINGS, assembly (supersedes ROD,	
		01-15			w/BEARINGS, assembly, AUC-2UU020)	6
					(Composed of:	
				AUC-2UU01299	1 CAP	
				AUC-2UU0118	2 NUT	
				AUC-2UU0115	1 ROD	
				AUC-2UU0553	AR SHIM	
				AUC-2UUA0553	3 SHIM)	
	G156-0380211			AUC-2UU01365	SCREW, clamp, engine piston pin (HM-1711A) (superseded by SCREW, AUC-2UU01365A)	6
	4300-11756A	01-6, 15		AUC-2UU01365A	SCREW, clamp, engine piston pin (HM-11756A) (supersedes SCREW, AUC-2UU01365)	6
H-1	H001-7017710	01, 15	114607	AUC-S-3176	WASHER, lock, ext. teeth, reg., S., 7/16 in. (engine connecting rod clamp screw)	6
					0104A — CONNECTING ROD BEARINGS	
	G509-0117260	01-5, 15		AUC-2UU0109	BEARING, engine connecting rod, std. (HM-17075B) (part of BEARING SET, AUC-2UU0109AS)	12
				AUC-2UUA0231	BEARING, engine connecting rod, .020 U/S (part of BEARING SET, AUC-2UUA0231AS)	12
				AUC-2UUB0231	BEARING, engine connecting rod, .030 U/S (part of BEARING SET, AUC-2UUB0231AS)	12
				AUC-2UU0109S	BEARING SET, engine connecting rod, std. (superseded by BEARING SET, AUC-2UU0109AS)	1
					(Composed of:	
				AUC-2UU0109	2 BEARING)	
	0600-2UU0109AS			AUC-2UU0109AS	BEARING SET, engine connecting rod, std. (supersedes BEARING SET, AUC-2UU0109S)	1
					(Composed of:	
				AUC-2UU0109	2 BEARING	
				AUC-2UU0553	4 SHIM, .002	
				AUC-2UUA0553	2 SHIM, .003)	
				AUC-2UUA0231S	BEARING SET, engine connecting rod, .020 U/S (superseded by BEARING SET, AUC-2UUA0231AS)	1
					(Composed of:	
				AUC-2UUA0231	2 BEARING)	

Note Symbol	Official Stock Number	Figure Number	Part Number		ITEM	Quan. Reqd. per Unit Assy.	Unit Price
			Ordnance	Manufacturer			
Col. 1	Col. 2	Col. 3	Col. 4	Col. 5	Col. 6	Col. 6	Col. 8
					0104A — CONNECTING ROD BEARINGS — Continued		
				AUC-2UUA0231AS	BEARING SET, engine connecting rod, .020 U/S (supersedes BEARING SET, AUC-2UUA0231S).....	1	
					(Composed of:		
				AUC-2UUA0231	2 BEARING		
				AUC-2UU0553	4 SHIM, .002		
				AUC-2UUA0553	2 SHIM, .003)		
				AUC-2UUB0231S	BEARING SET, engine connecting rod, .030 U/S (superseded by BEARING SET, AUC-2UUB0231AS).....	1	
					(Composed of:		
				AUC-2UUB0231	2 BEARING)		
	0600-2UUB0231AS			AUC-2UUB0231AS	BEARING SET, engine connecting rod, .030 U/S (supersedes BEARING SET, AUC-2UUB0231S).....	1	
					(Composed of:		
				AUC-2UUB0231	2 BEARING		
				AUC-2UU0553	4 SHIM, .002		
				AUC-2UUA0553	2 SHIM, .003)		
	G509-0384676	01-6, 15		AUC-2UU0553	SHIM, engine connecting rod, .002 (HM-16692A) (part of BEARING SETS, AUC-2UU0109AS, AUC-2UUA0231AS and AUC-2UUB0231AS).....	AR	
		01-15		AUC-2UUA0553	SHIM, engine connecting rod, .003 (HM-16693A) (part of BEARING SETS, AUC-2UU0109AS, AUC-2UUA0231AS and AUC-2UUB0231AS).....	AR	
				AUC-2UU01497	SHIM SET, engine connecting rod (superseded by BEARING SETS, AUC-2UU0109AS, AUC-2UUA0231AS and AUC-2UUB0231AS).....	1	
					(Composed of:		
				AUC-2UU0553	24 SHIM, .002		
				AUC-2UUA0553	12 SHIM, .003)		
					0105 — VALVES, SEATS, GUIDES AND SPRINGS		
	G509-0203141	01-5, 16		AUC-2UUA021	GUIDE, engine exhaust valve (HM-15015B).....	6	
	G509-0203140	01-5, 16		AUC-2UU021	GUIDE, engine intake valve (HM-1611A).....	6	
	G509-0232815			AUC-2UU01001	INSERT, engine exhaust valve seat, std. (HM-16511A).....	6	

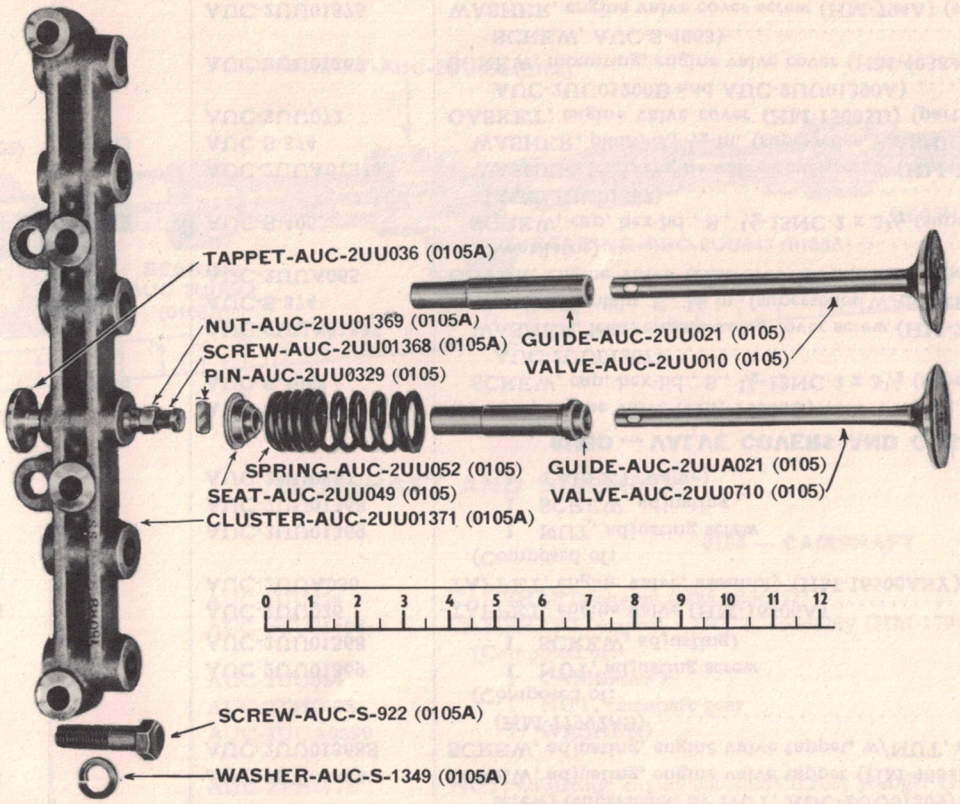

FIGURE 01-16 **VALVES, GUIDES, SEATS, SPRINGS AND TAPPETS** **RA PD 346158**

			AUC-2UUA01001	INSERT, engine exhaust valve seat, .005 O/S (superseded by INSERT, AUC-2UUC01001)	6
			AUC-2UUB01001	INSERT, engine exhaust valve seat, .010 O/S (superseded by INSERT, AUC-2UUC01001)	6
		01-5	AUC-2UUC01001	INSERT, engine exhaust valve seat, 1/32 O/S (supersedes INSERTS, AUC-2UUA01001 and AUC-2UUB01001)	6
	G509-0338890	01-5, 16	AUC-2UU0329	PIN, engine valve spring seat (HM-21011A)	12
	4300-1613A	01-5, 16	AUC-2UU049	SEAT, engine valve spring (HM-1613A)	12
	G509-0389820	01-5, 6, 16	AUC-2UU052	SPRING, engine valve (HM-19772A)	12
	G509-0427331	01-5, 16	AUC-2UU010	VALVE, exhaust, engine (HM-15510A)	6
	G509-0427336	01-5, 16	AUC-2UU0710	VALVE, intake, engine (HM-15520A)	6

Note Symbol	Official Stock Number	Figure Number	Part Number: Ordnance	Part Number: Manufacturer	ITEM	Quan. Reqd. per Unit Assy.	Unit Price
Col. 1	Col. 2	Col. 3	Col. 4	Col. 5	Col. 6	Col. 7	Col. 8
					0105A — TAPPETS		
	G509-0135760	01-5, 6, 16		AUC-2UU01371	CLUSTER, engine valve tappet (HM-15088B)	2	
H-1	H001-1013074	01-6, 16	217057	AUC-S-922	SCREW, cap, hex-hd., S., ½-13NC-2 x 2	8	
H-1	H001-1518011	01-16	103323	AUC-S-1349	WASHER, lock, reg., S., ½ in.	8	
	G120-0155690			AUC-2UU01373	COLLAR, dowel, engine valve tappet cluster (HM-2210A)	4	
	G067 1200740	01-5, 6, 16		AUC-2UU01369	NUT, engine valve tappet adjusting screw (HM-2186A) (supersedes NUT, AUC-S-1418)	12	
H-1	H001-4167600		103026	AUC-S-1418	NUT, light, hex., s-fin., S., ⅜-24NF-2 (engine valve tappet adjusting screw) (superseded by NUT, AUC-2UU01369)	12	
	G509-0382115	01-5, 6, 16		AUC-2UU01368	SCREW, adjusting, engine valve tappet (HM-4682A)	12	
				AUC-2UU01368S	SCREW, adjusting, engine valve tappet, w/NUT, assembly (HM-17992AS)	12	
					(Composed of:		
				AUC-2UU01369	1 NUT, adjusting screw		
				AUC-2UU01368	1 SCREW, adjusting)		
	G509-0396346	01-5, 6, 16		AUC-2UU036	TAPPET, engine valve (HM-16506A)	12	
	4300-16506ASY			AUC-2UUA036	TAPPET, engine valve, assembly (HM-16506ASY)	12	
					(Composed of:		
				AUC-2UU01369	1 NUT, adjusting screw		
				AUC-2UU01368	1 SCREW, adjusting		
				AUC-2UU036	1 TAPPET, valve)		
					0105D — VALVE COVERS AND GASKETS		
	4300-15006B			AUC-2UU065	COVER, engine valve (HM-15006B)	1	
H-1	H001-1013080	01-6	217079	AUC-S-4063	SCREW, cap, hex-hd., S., ½-13NC-2 x 3½ (supersedes SCREW, AUC-2UU01367)	2	
	G156-0443030			AUC-2UUA01375	WASHER, lead, engine valve cover screw (HM-795A)	2	
H-1	H001-1530011	01-6	103343	AUC-S-374	WASHER, plain, S., ½ in. (supersedes WASHER, AUC-2UU01375)	2	
	4300-17007BS	01-6		AUC-2UUA065	COVER, engine valve (HM-17007BS) (with tapped hole for crankcase ventilator)	1	
H-1	H001-1013080		217079	AUC-S-4063	SCREW, cap, hex-hd., S., ½-13NC-2 x 3½ (supersedes SCREW, AUC-2UU01367)	2	
	G156-0443030	01-6		AUC-2UUA01375	WASHER, lead, engine valve cover screw (HM-795A)	2	
H-1	H001-1530011		103343	AUC-S-374	WASHER, plain, S., ½ in. (supersedes WASHER, AUC-2UU01375)	2	
	G510-0194034	01-6, 7		AUC-2UU072	GASKET, engine valve cover (HM-15005B) (part of GASKET SETS, AUC-2UU01200B and AUC-2UU01390A)	2	
	G156-0382016			AUC-2UU01367	SCREW, mounting, engine valve cover (HM-4038A) (superseded by SCREW, AUC-S-4063)	4	
	G120-0442820			AUC-2UU01375	WASHER, engine valve cover screw (HM-794A) (superseded by WASHER, AUC-S-374)	4	

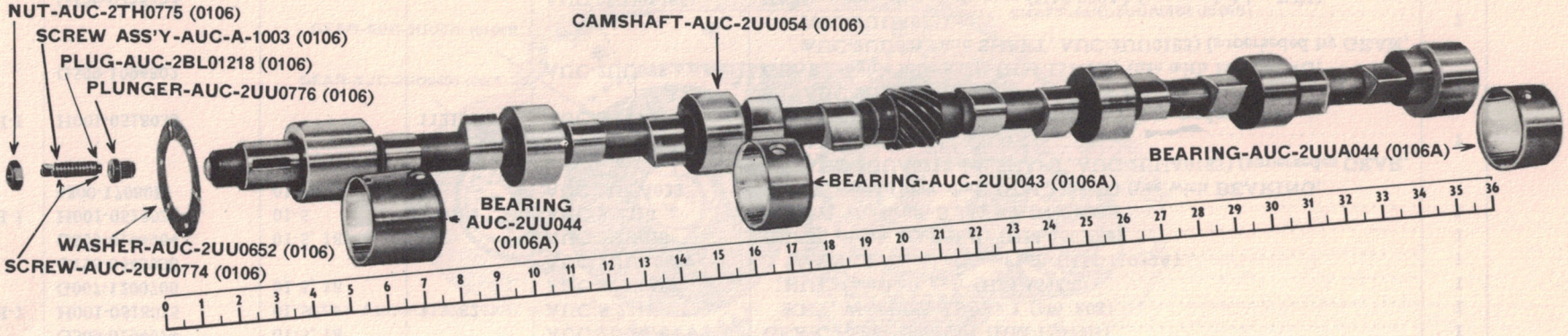

FIGURE 01-17 **CAMSHAFT AND BEARINGS** **RA PD 346159**

0106 — CAMSHAFT

	G509-0131481	01-5, 17		AUC-2UU054	CAMSHAFT, engine (HM-16567D)	1
	0600-2UU01498			AUC-2UU01498	CAMSHAFT, engine, w/NUT, assembly (HM-17993AS)	1
					(Composed of:	
				AUC-2UU054	1 CAMSHAFT	
				AUC-2TH0698	1 NUT, camshaft gear	
				AUC-2UUA0699	1 WASHER)	
H-1	H001-0716004	01-5, 17		AUC-2TH0775	NUT, adjusting, engine camshaft thrust plunger (HM-2048A)	1
	G067-1200855	01-17		AUC-2BL01218	PLUG, adjusting screw, engine camshaft thrust plunger (HM-14591A)	1
	G096-2200040	01-5, 17		AUC-2UU0776	PLUNGER, thrust, engine camshaft (HM-14209A)	1
		01-17		AUC-A-1003	SCREW, adjusting, engine camshaft thrust plunger (HM-14597A)	1
	G156-0382036	01-3, 5, 17		AUC-2UU0774	SCREW, adjusting, engine camshaft thrust plunger, assembly (HM-14596AS)	1
					(Composed of:	
				AUC-2BL01218	1 PLUG	
				AUC-A-1003	1 SCREW)	
				AUC-2UU0774S	SCREW, adjusting, engine camshaft thrust plunger, w/NUT, assembly	1
					(Composed of:	
				AUC-2TH0775	1 NUT	
				AUC-2UU0774	1 SCREW, w/PLUG, assembly)	
	G156-0443033	01-5, 17		AUC-2UU0652	WASHER, thrust, engine camshaft (HM-4342A)	1

Note Symbol	Official Stock Number	Figure Number	Part Number		ITEM	Quan. Reqd. per Unit Assy.	Unit Price
			Ordnance	Manufacturer			
Col. 1	Col. 2	Col. 3	Col. 4	Col. 5	Col. 6	Col. 7	Col. 8
					0106A — CAMSHAFT BEARINGS		
	G509-0117213	01-5, 17		AUC-2UU043	BEARING, engine camshaft, center (HM-15044B) (part of BEARING SET, AUC-2UU01499)	4	
	G509-0117212	01-5, 9, 17		AUC-2UU044	BEARING, engine camshaft, front (HM-15043B) (part of BEARING SET, AUC-2UU01499)	1	
		01-5, 17		AUC-2UUA044	BEARING, engine camshaft, rear (HM-16543B) (part of BEARING SET, AUC-2UU01499)	1	
	0600-2UU01499			AUC-2UU01499	BEARING SET, engine camshaft	1	
					(Composed of:		
				AUC-2UU043	4 BEARING, center		
				AUC-2UU044	1 BEARING, front		
				AUC-2UUA044	1 BEARING, rear)		
					0106B — TIMING GEARS		
	4300-17077A	01-9		AUC-2UUA0213	BEARING, engine idler shaft (HM-17077A) (use with GEAR, AUC-2UUA033 and SHAFT, AUC-2UUA0183) (supersedes BEARING, AUC-2UU0213)	1	
				AUC-2UU0213	BEARING, engine idler shaft (HM-17082A) (use with GEAR, AUC-2UU033 and SHAFT, AUC-2UU0183) (superseded by BEARING, AUC-2UUA0213)	1	
	G509-0194974	01-5, 18		AUC-2UU076	GEAR, engine camshaft (HM-15049B)	1	
H-1	H001-0518035	01-5	113782	AUC-S-2316	KEY, Woodruff, S., ¼ x 1 (No. 808)	1	
	G067-1200706	01-5, 18		AUC-2TH0698	NUT, camshaft gear (HM-1698A)	1	
	G156-0443038			AUC-2UUA0699	WASHER, camshaft gear nut (HM-11039A)	1	
	G509-0194964	01-5, 18		AUC-2UU023	GEAR, engine crankshaft (HM-15039B)	1	
H-1	H001-0518035	01-5	113782	AUC-S-2316	KEY, Woodruff, S., ¼ x 1 (No. 808)	1	
	4300-17080B	01-18		AUC-2UUA033	GEAR, engine idler shaft (HM-17080B) (use with BEARING, AUC-2UUA0213 and SHAFT, AUC-2UUA0183) (supersedes GEAR, AUC-2UU033)	1	
H-1	H001-0518033		112139	AUC-S-2345	KEY, Woodruff, S., ¼ x ⅞ (No. 807) (supersedes KEY, AUC-2UU01385)	1	
	G509-1094802			AUC-2UU033	GEAR, engine idler shaft (HM-15105B) (use with BEARING, AUC-2UU0213 and SHAFT, AUC-2UU0183) (superseded by GEAR, AUC-2UUA033)	1	
	G156-0258753			AUC-2UU01385	KEY, engine idler shaft gear (HM-920A) (superseded by KEY, AUC-S-2345)	1	
H-1	H001-0716004			AUC-2TH0775	NUT, adjusting, engine idler shaft gear thrust plunger (HM-2048A)	1	

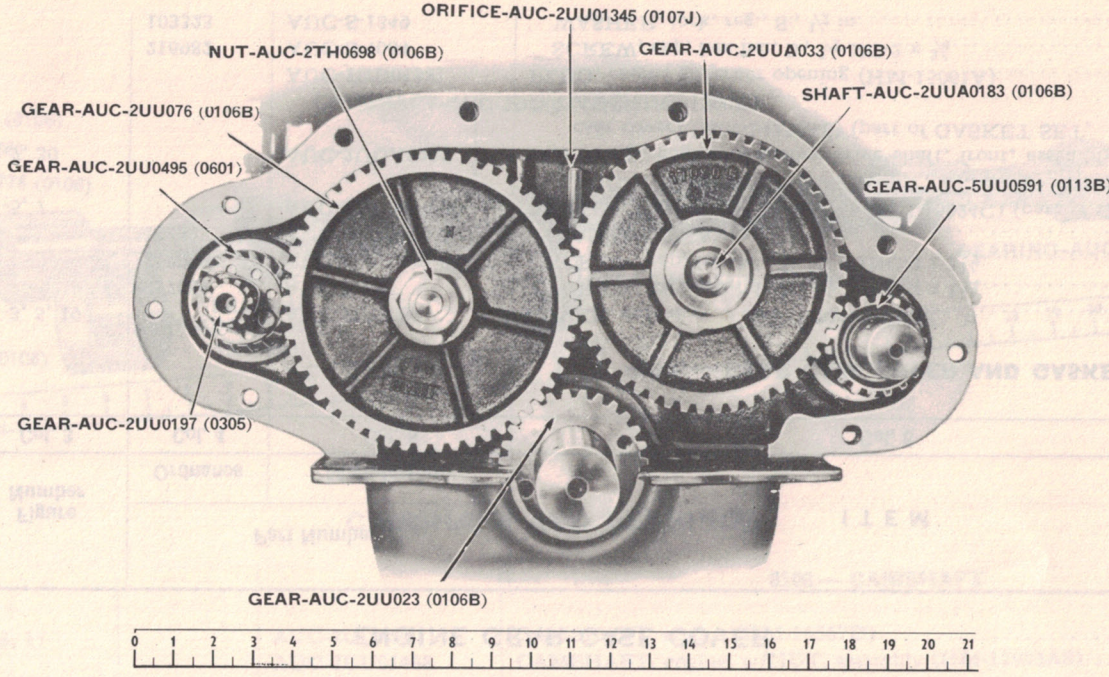

FIGURE 01-18 **TIMING GEARS** **RA PD 346160**

G067-1200855			AUC-2BL01218	PLUG, adjusting screw, engine idler shaft thrust plunger (HM-14591A)	1
G096-2200040			AUC-2UU0776	PLUNGER, thrust, engine idler shaft (HM-14209A)	1
			AUC-A-1004	SCREW, adjusting, engine idler shaft thrust plunger (HM-14595A)	1
G067-0104580			AUC-2BL0774	SCREW, adjusting, engine idler shaft thrust plunger, assembly (HM-14594AS)	1
				(Composed of:	
			AUC-2BL01218	1 PLUG	
			AUC-A-1004	1 SCREW)	
4300-17081B	01-18		AUC-2UUA0183	SHAFT, idler, engine (HM-17081B) (use with BEARING, AUC-2UUA0213 and GEAR, AUC-2UUA033) (supersedes SHAFT, AUC-2UU0183)	1
G509-0383901			AUC-2UU0183	SHAFT, idler, engine (HM-17878B) (use with BEARING, AUC-2UU0213 and GEAR, AUC-2UU033) (superseded by SHAFT, AUC-2UUA0183)	1
G156-0443033			AUC-2UU0652	WASHER, thrust, engine idler shaft gear (HM-4342A) (superseded by WASHER, AUC-2UU0652A)	1
			AUC-2UU0652A	WASHER, thrust, engine idler shaft gear (HM-17917A) (supersedes WASHER, AUC-2UU0652)	1

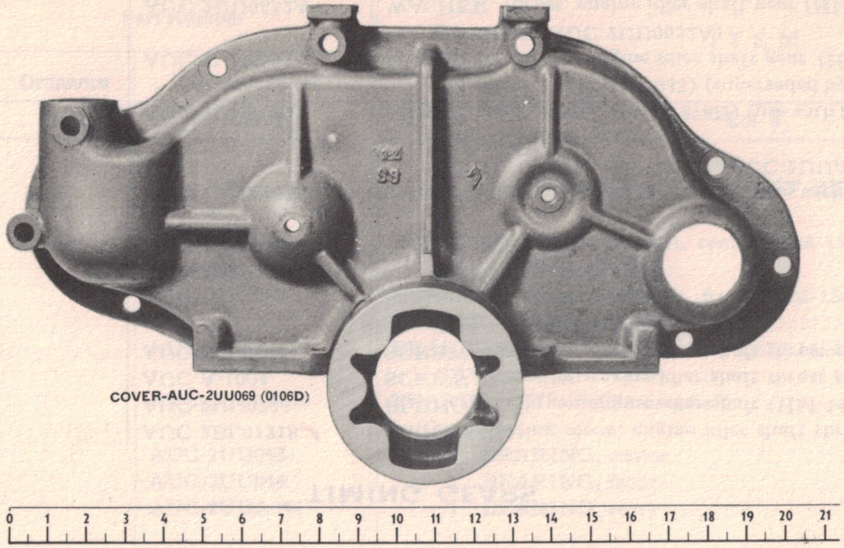

FIGURE 01-19 ENGINE GEAR CASE COVER RA PD 346161

Note Symbol	Official Stock Number	Figure Number	Part Number		ITEM	Quan. Reqd. per Unit Assy.	Unit Price
			Ordnance	Manufacturer			
Col. 1	Col. 2	Col. 3	Col. 4	Col. 5	Col. 6	Col. 7	Col. 8
					0106D — GEAR CASE COVER AND GASKETS		
	G509-0140685	01-3, 5, 19		AUC-2UU069	COVER, engine gear case (HM-17030D)	1	
H-1	H001-1013071		•217054	AUC-S-25	SCREW, cap, hex-hd., S., ½-13NC-2 x 1¼	5	
H-1	H001-1013080		217079	AUC-S-4063	SCREW, cap, hex-hd., S., ½-13NC-2 x 3½	1	
H-1	H001-1518011		103323	AUC-S-1349	WASHER, lock, reg., S., ½ in.	6	
	G509-0193815	01-5, 7		AUC-2UU0178	GASKET, engine gear case cover (HM-15024C) (part of GASKET SET, AUC-2UU01200B)	1	
H-13	H013-0500049	01-7, 30		AUC-2UUA0962	OIL SEAL, engine accessory drive shaft, front, assembly (engine gear case cover) (HM-14236AS) (part of GASKET SET, AUC-2UU01200B)	1	
	G156-0340681			AUC-2UU01381	PLUG, engine governor opening (HM-15061A)	1	
H-1	H001-1013068		216982	AUC-S-4064	SCREW, cap, hex-hd., S., ½-NC-2 x ¾	1	
H-1	H001-1518011		103323	AUC-S-1349	WASHER, lock, reg., S., ½ in.	1	

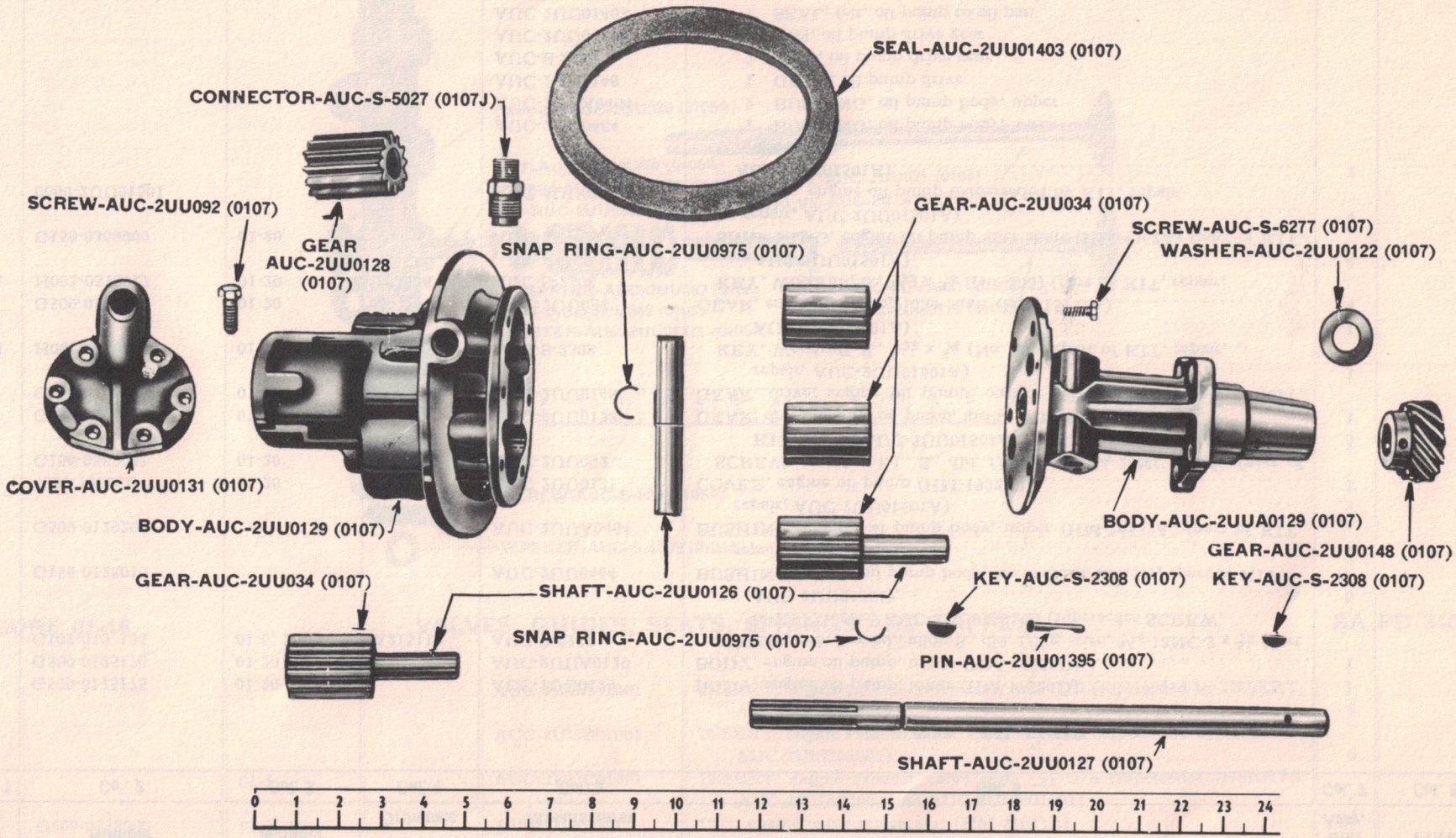

FIGURE 01-20 ENGINE OIL PUMP RA PD 346162

Note Symbol	Official Stock Number	Figure Number	Part Number		ITEM	Quan. Reqd. per Unit Assy.	Unit Price
			Ordnance	Manufacturer			
Col. 1	Co. 2	Col. 3	Col. 4	Col. 5	Col. 6	Col. 7	Col. 8
					0107 — OIL PUMP		
	G509-0125175	01-20		AUC-2UU0129	BODY, engine oil pump, lower (HM-17524D)	1	
	G509-0125176	01-20		AUC-2UUA0129	BODY, engine oil pump, upper (HM-16538D)	1	
	G102-010 135	01-6, 20	A215110	AUC-S-6277	SCREW, cap, hex-hd., alloy-S., dld. f/lkg. wire, 5/16-18NC-2 x 5/8 (part of KIT, repair, AUC-2UU01501A) (supersedes SCREW, AUC-2UU01391)	6	
	G156-0128019			AUC-2UU0464	BUSHING, engine oil pump body, lower (HM-19017A) (part of KIT, repair, AUC-2UU01501A)	1	
	G509-0129208			AUC-2UUA0464	BUSHING, engine oil pump body, upper (HM-16539A) (part of KIT, repair, AUC-2UU01501A)	2	
	4300-19028B	01-20		AUC-2UU0131	COVER, engine oil pump (HM-19028B)	1	
	G156-0382021	01-20		AUC-2UU092	SCREW, cap, hex-hd., S., dld. f/lkg. wire, 1/4-20NC-2 x 5/8 (part of KIT, repair, AUC-2UU01501A)	6	
	G509-0195065	01-20		AUC-2UU0128	GEAR, drive, engine oil pump, inside (HM-16453A)	1	
	G156-0196006	01-20		AUC-2UU0148	GEAR, drive, engine oil pump, outside (HM-15131A) (part of KIT, repair, AUC-2UU01501A)	1	
H-1	H001-0518017	01-20	103906	AUC-S-2308	KEY, Woodruff, S., 5/32 x 3/4 (No. 506) (part of KIT, repair, AUC-2UU01501A)	1	
	G509-0195040	01-20		AUC-2UU034	GEAR, engine oil pump idler shaft (HM-15122A)	4	
H-1	H001-0518017	01-20	103906	AUC-S-2308	KEY, Woodruff, S., 5/32 x 3/4 (No. 506) (part of KIT, repair, AUC-2UU01501A)	4	
	G156-0369900	01-20		AUC-2UU0975	SNAP RING, engine oil pump idler shaft (HM-4362A) (part of KIT, repair, AUC-2UU01501A)	4	
	0600-2UU01501			AUC-2UU01501	KIT, repair, engine oil pump (superseded by KIT, repair, AUC-2UU01501A)	1	
					(Composed of:		
				AUC-2UU0464	1 BUSHING, oil pump body, lower		
				AUC-2UUA0464	2 BUSHING, oil pump body, upper		
				AUC-2UU0148	1 GEAR, oil pump drive		
				AUC-S-2308	2 KEY, oil pump drive gear		
				AUC-2UU01395	1 PIN, oil pump drive gear		
				AUC-2UU01403	1 SEAL, felt, oil pump to oil pan		
				AUC-2UU0975	1 SNAP RING, oil pump idler shaft		
				AUC-2UU0122	1 WASHER, oil pump drive gear)		
	0600-2UU01501A			AUC-2UU01501A	KIT, repair, engine oil pump (supersedes KIT, repair, AUC-2UU01501)	1	
					(Composed of:		
				AUC-2UU0464	1 BUSHING, oil pump body, lower		

				AUC-2UUA0464	2 BUSHING, oil pump body, upper	
				AUC-2UUA0578	2 GASKET, oil pump suction line flange	
				AUC-2UU0148	1 GEAR, oil pump drive	
				AUC-S-2308	2 KEY, oil pump drive gear and idler shaft gear	
				AUC-2UU01395	1 PIN, oil pump drive gear	
				AUC-S-6277	2 SCREW, oil pump body	
				AUC-2UU092	2 SCREW, oil pump cover	
				AUC-2UU01403	1 SEAL, felt, oil pump to oil pan	
				AUC-2UU0975	1 SNAP RING, oil pump idler shaft	
				AUC-2UU0122	1 WASHER, oil pump drive gear)	
	G096-5800220	01-20		AUC-2UU01395	PIN, engine oil pump drive gear (HM-1157A) (part of KIT, repair, AUC-2UU01501A)	1
	G509-0345886	01-5		AUC-2UU0150	PUMP, oil, engine, assembly (HM-17523ES)	1
H-1	H001-1031010		220631	AUC-S-1762	SCREW, cap, hex-hd., S., dld. f/lkg-wire, 3/8-16NC-2 x 1 (supersedes SCREW, AUC-2UUA092)	4
H-1	H001-1518009		103321	AUC-S-1347	WASHER, lock, reg., S., 3/8 in	4
	G156-0382022			AUC-2UU01391	SCREW, engine oil pump body (HM-4605A) (superseded by SCREW, AUC-S-6277)	6
	G156-0382025			AUC-2UUA092	SCREW, mounting, engine oil pump (HM-4629A) (superseded by SCREW, AUC-S-1762)	4
	G509-0382861	01-6, 7, 20		AUC-2UU01403	SEAL, felt, engine oil pump to oil pan (HM-19019A) (part of GASKET SETS, AUC-2UU01200B and AUC-2UU01514A and KIT, repair, AUC-2UU01501A)	1
	G509-0383915	01-20		AUC-2UU0127	SHAFT, drive, engine oil pump (HM-16452B)	1
	G509-0383900	01-20		AUC-2UU0126	SHAFT, idler, engine oil pump (HM-15125A)	3
	G156-0443041	01-20		AUC-2UU0122	WASHER, engine oil pump drive gear (HM-15126A) (part of KIT, repair, AUC-2UU01501A)	1
					0107A — OIL PAN	
	G509-0194822	01-6, 7, 21		AUC-2UU0161	GASKET, engine oil pan (HM-17185C) (part of GASKET SETS, AUC-2UU01200B and AUC-2UU01514A)	2
	G120-0193945	01-5, 6, 7, 21		AUC-2UU01327	GASKET, engine oil pan drain plug (HM-296A) (part of GASKET SETS, AUC-2UU01200B and AUC-2UU01514A)	3
	G156-0194026	01-5, 7, 21		AUC-2UU0377	GASKET, engine oil pan oil strainer and water trap (HM-8146A) (part of GASKET SETS, AUC-2UU01200B and AUC-2UU01514A)	1
	G510-0194045			AUC-2UU01514	GASKET SET, engine oil pan (superseded by GASKET SET, AUC-2UU01514A)	1
					(Composed of:	
				AUC-2UU0161	2 GASKET, oil pan	
				AUC-2UU01327	2 GASKET, oil pan drain plug	
				AUC-2UU0377	1 GASKET, oil pan strainer	
				AUC-2UU0962	1 OIL SEAL, engine crankshaft, front	
				AUC-2UU01403	1 SEAL, felt, oil pump to oil pan)	

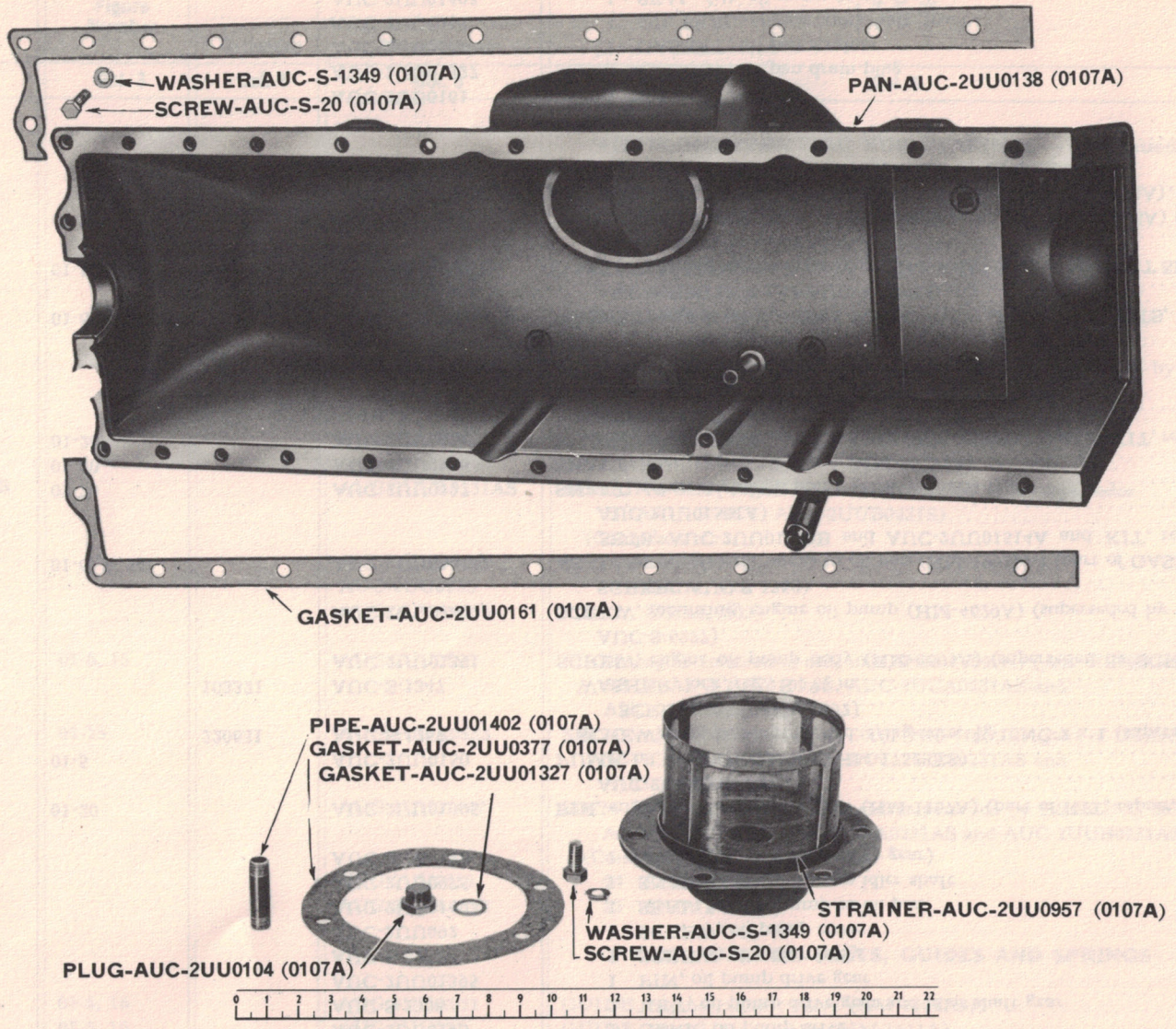

FIGURE 01-21 ENGINE OIL PAN RA PD 346163

Note Symbol	Official Stock Number	Figure Number	Part Number		ITEM	Quan. Reqd. per Unit Assy.	Unit Price
			Ordnance	Manufacturer			
Col. 1	Col. 2	Col. 3	Col. 4	Col. 5	Col. 6	Col. 7	Col. 8
					0107A — OIL PAN — Continued		
	0600-2UU01514A			AUC-2UU01514A	GASKET SET, engine oil pan (supersedes GASKET SET, AUC-2UU01514)	1	
					(Composed of:		
				AUC-2TH0782	1 GASKET, flywheel housing		
				AUC-2UU0161	2 GASKET, oil pan		
				AUC-2UU01327	2 GASKET, oil pan drain plug		
				AUC-2UU0377	1 GASKET, oil pan strainer		
				AUC-2UU0578	7 GASKET, oil pump main discharge pipe		
				AUC-2UUA0578	1 GASKET, oil pump suction line flange		
				AUC-2UU01403	1 SEAL, felt, oil pump to oil pan)		
	G509-0333891	01-6, 21		AUC-2UU0138	PAN, oil, engine (HM-17183E)	1	
	4300-17422AS	01-1, 2		AUC-2UUA0138	PAN, oil, engine, w/STRAINER, assembly (HM-17422AS) (supersedes PAN, AUC-2UU0138)	1	
					(Composed of:		
				AUC-2UU01327	2 GASKET, oil pan drain plug		
				AUC-2UU0377	1 GASKET, oil strainer		
				AUC-2UU0138	1 PAN, oil		
				AUC-2UU01402	1 PIPE, vent		
				AUC-2UU0104	2 PLUG, drain		
				AUC-2UU0957	1 STRAINER, oil, w/water TRAP, assembly)		
H-1	H001-1013070	01-5, 21	217051	AUC-S-20	SCREW, cap, hex-hd., S., ½-13NC-2 x 1	26	
H-1	H001-1518011	01-5, 21	103323	AUC-S-1349	WASHER, lock, reg., S., ½ in.	26	
		01-21		AUC-2UU01402	PIPE, vent, engine oil pan sump (HM-16185A)	1	
	4300-14867A	01-1, 2, 5, 6, 21		AUC-2UU0104	PLUG, drain, magnetic, engine oil pan (HM-14867A)	3	
	G509-0390550	01-1, 2, 5, 21		AUC-2UU0957	STRAINER, oil, engine oil pan, w/water TRAP, assembly (HM-17899BS)	1	
					(Composed of:		
				AUC-A-1457	1 BUSHING		
				AUC-A-1458	1 CAP		
				AUC-2UU01327	1 GASKET		
				AUC-A-1459	1 GAUZE		
				AUC-2UU0104	1 PLUG		
				AUC-A-1460	1 SHELL		
				AUC-A-1461	1 STAMPING)		
H-1	H001-1013070	01-6-21	217051	AUC-S-20	SCREW, cap, hex-hd., S., ½-13NC-2 x 1	6	
H-1	H001-1518011	01-21	103323	AUC-S-1349	WASHER, lock, reg., S., ½ in.	6	

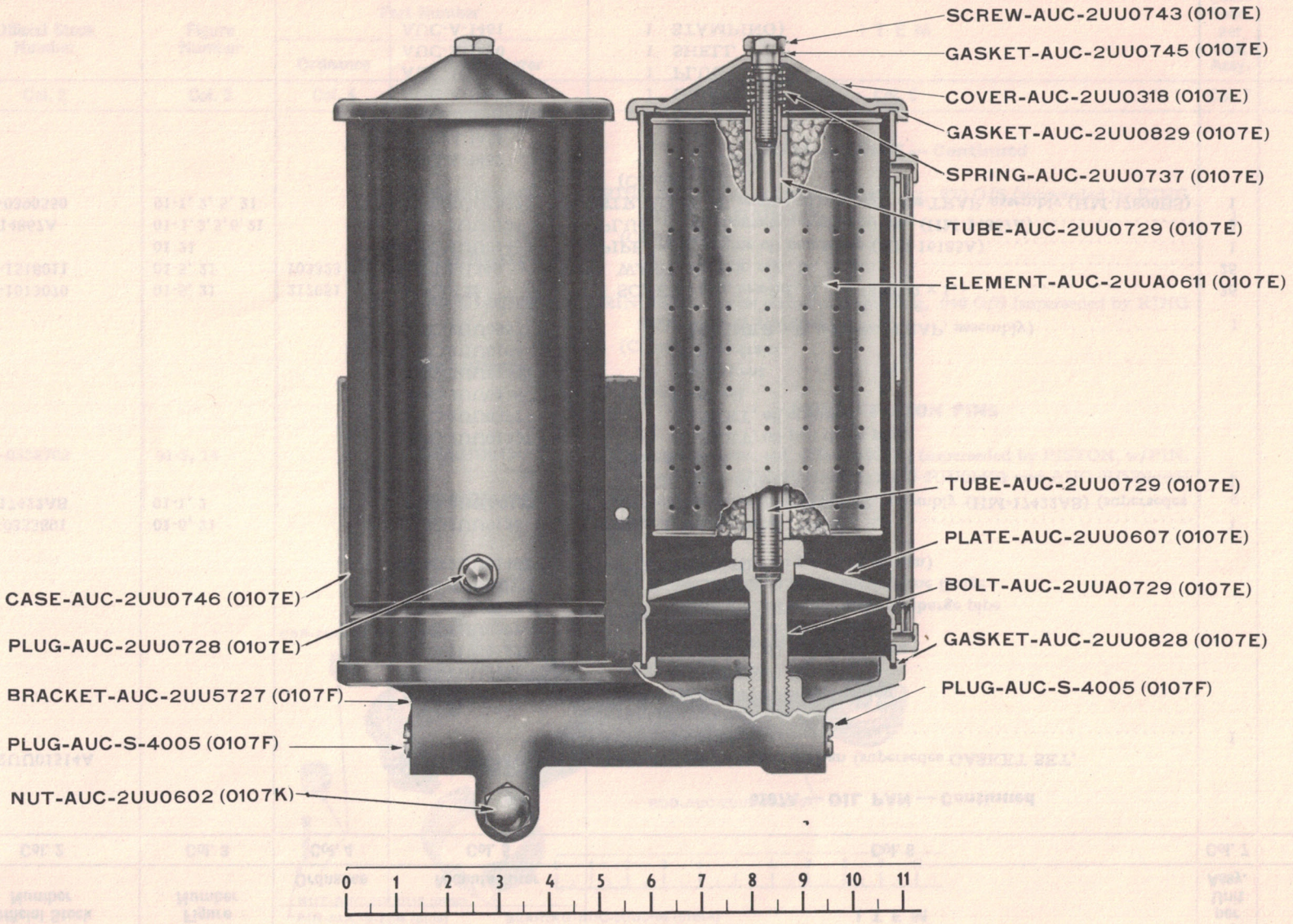

FIGURE 01-22 ENGINE OIL FILTER RA PD 346164

Note Symbol	Official Stock Number	Figure Number	Part Number		ITEM	Quan. Reqd. per Unit Assy.	Unit Price
			Ordnance	Manufacturer			
Col. 1	Col. 2	Col. 3	Col. 4	Col. 5	Col. 6	Col. 7	Col. 8
					0107E — OIL FILTER		
		01-22		AUC-2UUA0729	BOLT, clamp, engine oil filter case (FR-11735)	2	
		01-22		AUC-2UU0746	CASE, engine oil filter, w/inlet TUBE, assembly (FR-5267)	2	
					(Composed of:		
				AUC-A-1468	1 CASE		
				AUC-2UU0728	1 PLUG, drain		
				AUC-A-1469	1 SPUD, drain		
				AUC-A-1470	2 SPUD, inlet		
				AUC-A-1471	1 TUBE, inlet)		
		01-22		AUC-2UU0318	COVER, engine oil filter case (FR-11559)	2	
	G134-0140022			AUC-2UU01502	COVER, engine oil filter case, assembly (FR-5241)	2	
					(Composed of:		
				AUC-2UU0318	1 COVER		
				AUC-2UU0829	1 GASKET, cover		
				AUC-2UU0745	1 GASKET, cover screw		
				AUC-2UU0743	1 SCREW		
				AUC-2UU0737	1 SPRING)		
				AUC-2UU0611	ELEMENT, engine oil filter (FR-C-31) (superseded by ELEMENT, AUC-2UUA0611)	2	
	G147-0169131	01-22	A323549	AUC-2UUA0611	ELEMENT, engine oil filter (FR-C-31-D) (supersedes ELEMENT, AUC-2UU0611)	2	
	G067-1200460	01-2, 4, 6		AUC-2UU01335	FILTER, oil, engine, assembly (FR-F-36)	2	
					(Composed of:		
				AUC-2UUA0729	1 BOLT, case clamping		
				AUC-2UU0746	1 CASE, w/inlet TUBE, assembly		
				AUC-2UU01502	1 COVER, assembly		
				AUC-2UUA0611	1 ELEMENT		
				AUC-2UU0828	1 GASKET, case		
				AUC-2UU0607	1 PLATE, retaining		
				AUC-2UU0729	1 TUBE, center)		
	G102-5323524	01-7, 22		AUC-2UU0828	GASKET, engine oil filter case (FR-11639) (part of GASKET SET, AUC-2UU01200B)	2	
	G630-0194025	01-7, 22		AUC-2UU0829	GASKET, engine oil filter case cover (FR-11582) (part of GASKET SET, AUC-2UU01200B)	2	
	G067-1200557	01-22		AUC-2UU0745	GASKET, engine oil filter case cover screw (FR-11581)	2	

Note Symbol	Official Stock Number	Figure Number	Part Number		ITEM	Quan. Reqd. per Unit Assy.	Unit Price
			Ordnance	Manufacturer			
Col. 1	Col. 2	Col. 3	Col. 4	Col. 5	Col. 6	Col. 7	Col. 8
					0107E — OIL FILTER — Continued		
		01-22		AUC-2UU0607	PLATE, retaining, engine oil filter case (FR-11734)	2	
		01-22		AUC-2UU0728	PLUG, drain, oil filter case (FR-11584)	2	
	G067-1201126	01-22		AUC-2UU0743	SCREW, engine oil filter case cover (FR-11580)	2	
	G067-1201411	01-22		AUC-2UU0737	SPRING, engine oil filter case cover (FR-11583)	2	
		01-22		AUC-2UU0729	TUBE, center, engine oil filter (FR-11733)	2	
					0107F — OIL FILTER MOUNTING PARTS		
	4300-17269D	01-22, 24		AUC-2UU5727	BRACKET, engine oil filter (HM-17269D)	1	
				AUC-2UU01190	BRACKET, engine oil filter, assembly	1	
					(Composed of:		
				AUC-2UU5727	1 BRACKET		
				AUC-2UU0831	1 GASKET, adjusting screw cap		
				AUC-2UU0831	1 GASKET, adjusting screw lock nut		
				AUC-2UU0602	1 NUT, cap		
				AUC-2UU01213	1 NUT, lock, adjusting screw		
				AUC-S-4745	1 PLUG, pipe, 1/8 in.		
				AUC-S-4748	1 PLUG, pipe, 1/4 in.		
				AUC-S-4005	2 PLUG, pipe, 3/8 in.		
				AUC-2UU0956	1 SCREW, adjusting		
				AUC-2UU0477	1 SPRING, relief valve		
				AUC-2UU0598	1 VALVE, relief)		
H-1	H001-0718025		218571	AUC-S-1420	NUT, reg., hex., s-fin., S., 1/2-20NF-2	6	
	G156-0392262			AUC-2G2896	STUD, mounting, 1/2 x 1 7/8 (HM-3220A) (supersedes SCREWS, AUC-2UU0319 and AUC-2UUA0319)	6	
H-1	H001-1518011		103323	AUC-S-1349	WASHER, lock, reg., S., 1/2 in.	6	
				AUC-2UU0575	GASKET, mounting, engine oil filter bracket (HM-17246A) (superseded by GASKET, AUC-2UUA0575)	1	
	4300-17905A	01-7, 24		AUC-2UUA0575	GASKET, mounting, engine oil filter bracket (supersedes GASKET, AUC-2UU0575) (HM-17905A) (part of GASKET SETS, AUC-2UU01200B and AUC-2UU01390A)	1	
H-6	H006-0283405	01-22	103873	AUC-S-4005	PLUG, pipe, CI., std., ck., black, 3/8 in. (engine oil filter bracket)	2	
H-6	H006-0283989		103883	AUC-S-4745	PLUG, pipe, slotted, S., glvd., 1/8 in. (engine oil filter bracket)	2	
H-6	H006-0283985		A144588	AUC-S-4748	PLUG, pipe, slotted, S., glvd., 1/4 in. (engine oil filter bracket)	1	
	G136-0382046			AUC-2UUA0319	SCREW, mounting, engine oil filter, long (HM-8552A) (superseded by STUD, AUC-2G2896)	1	

	G120-0381984			AUC-2UU0319	SCREW, mounting, engine oil filter, short (HM-4625A) (superseded by STUD, AUC-2G2896)	3
					0107G — OIL FILLER	
		01-23		AUC-2UU21272	BRACE, engine oil filler pipe	1
H-1	H001-0718002	01-23	220065	AUC-S-82	NUT, reg., hex., s-fin., S., 5/16-18NC-2	1
H-1	H001-1013019	01-23	216922	AUC-S-3120	SCREW, cap, hex-hd., S., 5/16-18NC-2 x 1	2
H-1	H001-1518008	01-23	103320	AUC-S-1346	WASHER, lock, reg., S., 5/16 in.	2
	0600-2T2946A			AUC-2T2946A	CAP, engine oil filler, assembly (superseded by CAP, w/CHAIN, assembly, AUC-2UUA2946)	1
	0600-2UUA2946	01-23		AUC-2UUA2946	CAP, engine oil filler, w/CHAIN, assembly (STN-7105A) (supersedes CAP, AUC-2T2946A)	1
	0600-2UU31274			AUC-2UU31274	PIPE, engine oil filler, assembly (superseded by PIPE, assembly, AUC-2UUC31274)	1
	0600-2UUC31274	01-23		AUC-2UUC31274	PIPE, engine oil filler, assembly (supersedes PIPE, assembly, AUC-2UU31274)	1
					(Composed of:	
				AUC-2UVA21276	1 BODY	
				AUC-2UU21351	1 ELBOW, pipe	
				AUC-2UU21493	1 NECK	
				AUC-2UUA3105	1 PIPE)	
				AUC-2UU0110	PIPE, engine oil filler, w/CAP, assembly (superseded by PIPE, w/CAP, assembly, AUC-2UUB3110)	1
					(Composed of:	
	0600-2T2946A			AUC-2T2946A	1 CAP, assembly	
	0600-2UU31274			AUC-2UU31274	1 PIPE, assembly)	
		01-23		AUC-2UUB3110	PIPE, engine oil filler, w/CAP, assembly (supersedes PIPE w/CAP, assembly, AUC-2UU0110)	1
					(Composed of:	
	0600-2UUA2946			AUC-2UUA2946	1 CAP, w/CHAIN, assembly	
	0600-2UUC31274			AUC-2UUC31274	1 PIPE, assembly	
			BMFX1	AUC-S-1010F	1 RIVET, split, S., oval-hd., 9/64 x 1/2)	
		01-23		AUC-12AC9108	SPACER, engine oil filler pipe brace	1
					0107H — LEVEL GAGE	
	G509-0232469	01-2, 4, 6		AUC-2UU0210	GAGE, bayonet, engine oil pan, assembly (HM-17147AS)	1
					0107J — OIL LINES AND FITTINGS	
		01-23		AUC-16UU22068	ADAPTER, viscometer	1
		01-23		AUC-15UKSF23144	BRACKET, engine oil line (oil pressure gage and viscometer gage)	1
		01-5		AUC-2UU01416	CLAMP, engine oil pump suction line (HM-8588A)	4
H-1	H001-0713022		103043	AUC-S-1417	NUT, slotted, light, S., 1/4-28NF-2	2

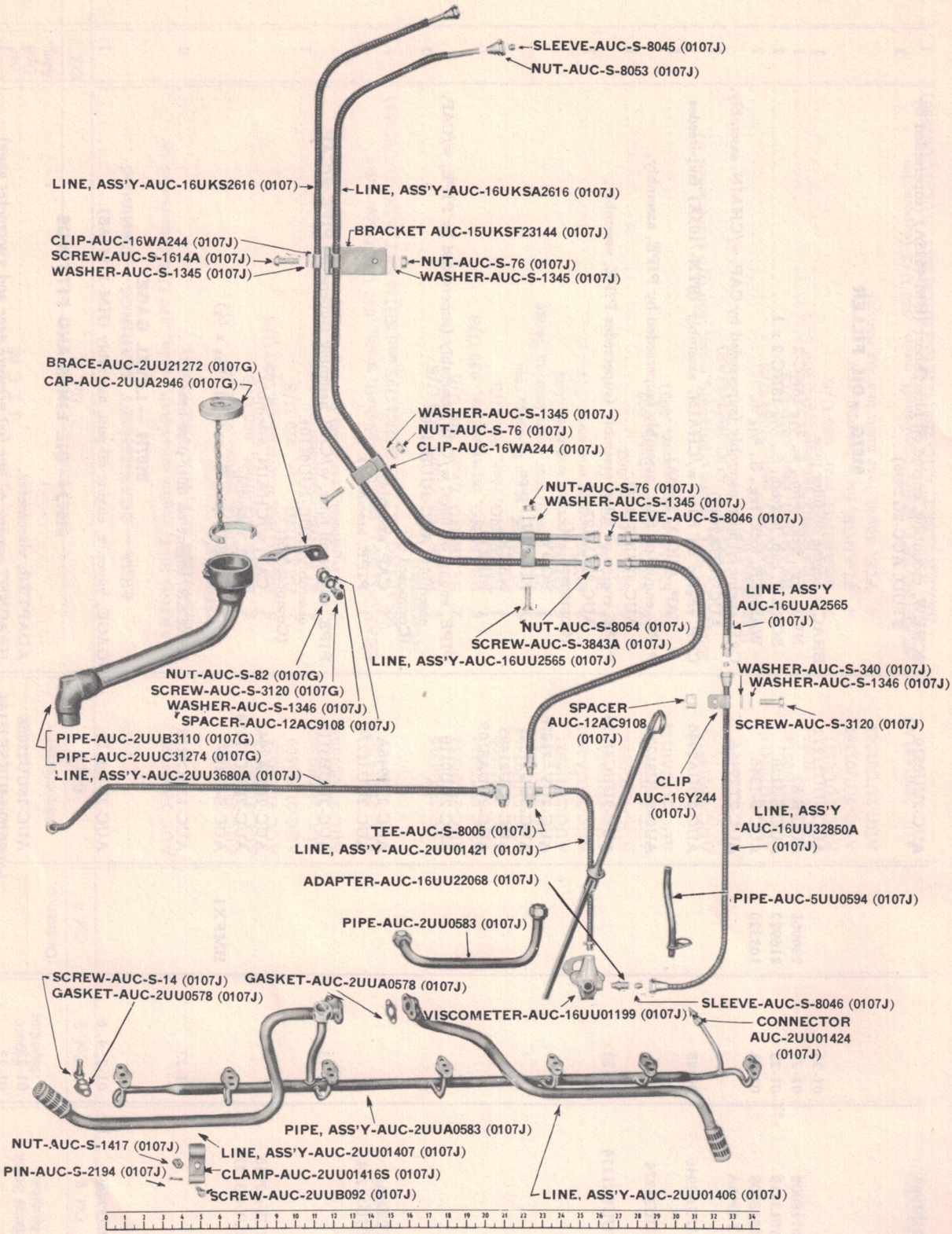

FIGURE 01-23 ENGINE OIL FILLER, LEVEL GAGE AND DISTRIBUTION SYSTEM RA PD 346165

Note Symbol	Official Stock Number	Figure Number	Part Number		ITEM	Quan. Reqd. per Unit Assy.	Unit Price
			Ordnance	Manufacturer			
Col. 1	Col. 2	Col. 3	Col. 4	Col. 5	Col. 6	Col. 7	Col. 8
					0107J — OIL LINES AND FITTINGS — Continued		
H-1	H001-0811025		103361	AUC-S-2194	PIN, cotter, split, S., 1/16 x 1/2	2	
				AUC-2UUB092	SCREW, cap, hex-hd., S., dld. f/c-pin, 1/4-28NF-2 x 3/4 (HM-4607A)	2	
	0600-2UU01416S			AUC-2UU01416S	CLAMP, engine oil pump suction line, w/BOLT and NUT, assembly	2	
					(Composed of:		
		01-23		AUC-2UU01416	2 CLAMP		
		01-23		AUC-S-1417	1 NUT, slotted		
		01-23		AUC-S-2194	1 PIN, cotter		
		01-23		AUC-2UUB092	1 SCREW, cap)		
		01-23		AUC-16WA244	CLIP, engine oil line (oil pressure gage and viscometer gage)	6	
H-1	H001-0718001	01-23	220064	AUC-S-76	NUT, reg., hex., s-fin., S., 1/4-20NC-2	3	
H-1	H001-1023135	01-23	113991	AUC-S-3843A	SCREW, machine, fl-hd., S., 1/4-20NC-2 x 3/4	2	
H-1	H001-1030136	01-23	113957	AUC-S-1614A	SCREW, machine, rd-hd., S., 1/4-20NC-2 x 3/4	1	
H-1	H001-1518007	01-23	103319	AUC-S-1345	WASHER, lock, reg., S., 1/4 in.	6	
		01-23		AUC-16Y244	CLIP, engine oil line (viscometer to flexible line)	1	
H-1	H001-1013019	01-23	216922	AUC-S-3120	SCREW, cap, hex-hd., S., 5/16-18NC-2 x 1	1	
		01-23		AUC-12AC9108	SPACER, 13/32 in. I.D. x 3/4 in. O.D. x 3/8 in. long	1	
H-1	H001-1518008	01-23	103320	AUC-S-1346	WASHER, lock, reg., S., 5/16 in.	1	
H-1	H001-1530008	01-23	103340	AUC-S-340	WASHER, plain, S., SAE std., 5/16 in. (11/32 in. I.D. x 11/16 in. O.D. x 1/16 in. thick)	1	
				AUC-2UUA21668	CONNECTOR, compression tube, restricted flow, 1/4 in., 1/8 in. male pipe end (with nut and sleeve) (WH-102-23154) (crankcase to governor oil line)	1	
		01-23		AUC-2UU01424	CONNECTOR, engine main oil discharge pipe (discharge pipe to cylinder block) (HM-14742AS)	1	
H-6	H006-0213550	01-6, 20	118752	AUC-S-5027	CONNECTOR, flared tube, 1/2 in., 3/8 in. male pipe end (without nut) (engine oil pump outlet pipe and main discharge pipe) (supersedes CONNECTOR, AUC-2UU01404)	3	
H-6	H006-0213550			AUC-2UU01404	CONNECTOR, pipe, engine oil pump (HM-2396A) (superseded by CONNECTOR, AUC-S-5027)	3	
				AUC-S-8108	ELBOW, compression tube, 1/4 in., 1/8 in. male pipe end (with nut and sleeve) (WH-W169x4) (crankcase to governor oil line)	1	
	G156-0194027	01-7, 23		AUC-2UU0578	GASKET, engine cylinder oil orifice (HM-15133A) (part of GASKET SET, AUC-2UU01200B)	1	
	G156-0194027	01-5, 7, 23		AUC-2UU0578	GASKET, engine oil pump main discharge pipe (HM-15133A) (part of GASKET SETS, AUC-2UU01200B and AUC-2UU01514A)	7	

Note Symbol	Official Stock Number	Figure Number	Part Number		ITEM	Quan. Reqd. per Unit Assy.	Unit Price
			Ordnance	Manufacturer			
Col. 1	Col. 2	Col. 3	Col. 4	Col. 5	Col. 6	Col. 7	Col. 8
					0107J — OIL LINES AND FITTINGS — Continued		
	G156-0194034	01-5, 7, 23		AUC-2UUA0578	GASKET, engine oil pump suction line flange (HM-19011A) (part of GASKET SETS, AUC-2UU01200B and AUC-2UU01514A and KIT, repair, AUC-2UU01501A)	2	
				AUC-2UU3680	LINE, engine oil, assembly (crankcase to governor) (superseded by LINE, assembly, AUC-2UU3680A)	1	
					(Composed of:		
				AUC-2UUA21668	1 CONNECTOR, restricted flow		
				AUC-S-8108	1 ELBOW		
				AUC-10SA0459	1 LOOM		
				AUC-S-5143	1 TUBING, cop., 35½ in. long)		
		01-23		AUC-2UU3680A	LINE, engine oil, assembly (crankcase to governor) (supersedes LINE, assembly, AUC-2UU3680)	1	
					(Composed of:		
				AUC-2UUA21668	1 CONNECTOR, restricted flow		
				AUC-S-8108	1 ELBOW		
				AUC-2UU01366	1 TUBE, w/LOOM, assembly)		
		01-23		AUC-16UKS2616	LINE, engine oil, assembly (oil pressure gage to flexible line)	1	
					(Composed of:		
				AUC-10SA2459	1 LOOM, fabric, 47⅜ in. long		
				AUC-S-4302	1 NUT, flared tube, ¼ in.		
				AUC-S-5282	1 TUBING, S., ¼ in. O.D., 51⅞ in. long)		
		01-23		AUC-2UU01421	LINE, engine oil, assembly (oil pressure line to viscometer) (HM-17884A) (superseded by LINE, assembly, AUC-2UU01491)	1	
				AUC-2UU01491	LINE, engine oil, assembly (oil pressure line to viscometer) (HM-17920BS) (superseded by LINE, assembly, AUC-2UUA01491)	1	
				AUC-2UUA01491	LINE, engine oil, assembly (oil pressure line to viscometer) (HM-17946DS) (supersedes LINE, assembly, AUC-2UU01491)	1	
		01-23		AUC-16UKSA2616	LINE, engine oil, assembly (viscometer gage to flexible line)	1	
					(Composed of:		
				AUC-16UU0273	1 LOOM, fabric, 58½ in. long		
				AUC-S-5282	1 TUBING, S., ¼ in. O.D., 2 in. long (sweated to S-5284)		
				AUC-S-5284	1 TUBING, S., 3/16 in. O.D., 64¼ in. long)		
				AUC-16UU32850	LINE, engine oil, assembly (viscometer to flexible line) (superseded by LINE, assembly, AUC-16UU32850A)	1	
					(Composed of:		
				AUC-S-8054	2 NUT, compression		

				AUC-S-8046	2 SLEEVE, compression	
				AUC-S-5143	1 TUBING, cop.)	
		01-23		AUC-16UU32850A	LINE, engine oil, assembly (viscometer to flexible line) (supersedes LINE, assembly, AUC-16UU32850)	1
					(Composed of:	
				AUC-S-8054	2 NUT, compression	
				AUC-S-8046	2 SLEEVE, compression	
				AUC-16UU02843	1 TUBING, S.)	
	G509-0276568	01-5, 23		AUC-2UU01406	LINE, engine oil pump front suction, assembly (HM-17885CS)	1
H-1	H001-1031001			AUC-2UU01384	SCREW, cap, hex-hd., S., dld. f/lkg-wire, 1/4-20NC-2 x 1/2 (HM-4253A)	1
	4300-4772A			AUC-2UUA0956	SCREW, cap, hex-hd., S., dld. f/lkg-wire, 1/4-20NC-2 x 1 (HM-4772A)	1
	G509-0276588	01-5, 23		AUC-2UU01407	LINE, engine oil pump rear suction, assembly (HM-16454CS)	1
H-1	H001-1031001			AUC-2UU01384	SCREW, cap, hex-hd., S., dld. f/lkg-wire, 1/4-20NC-2 x 1/2 (HM-4253A)	1
	4300-4772A			AUC-2UUA0956	SCREW, cap, hex-hd., S., dld. f/lkg-wire, 1/4-20NC-2 x 1 (HM-4772A)	1
	G510-0276500	01-2, 3, 23		AUC-16UU2565	LINE, flexible, engine pressure oil, assembly	1
		01-23		AUC-16UUA2565	LINE, flexible, engine viscometer oil, assembly	1
		01-23		AUC-S-8053	NUT, compression tube fitting, 3/16 in. (viscometer gage)	1
		01-23		AUC-S-8054	NUT, compression tube fitting, 1/4 in. (oil and viscometer gage lines)	4
	G156-0328384	01-5, 18		AUC-2UU01345	ORIFICE, oil, engine cylinder (HM-15739A)	1
	G156-0382017			AUC-2UU01348	SCREW, special head, 5/16-18NC-2 x 3/4	2
H-1	H001-7017650		114605	AUC-S-3180	WASHER, lock, ext. teeth, reg., S., 5/16 in.	2
	G509-0339252			AUC-5UU0594	PIPE, engine oil overflow, w/CLIP, assembly (HM-16524AS)	1
H-1	H001-1030132		113954	AUC-S-789A	SCREW, machine, rd-hd., S., 1/4-20NC-2 x 3/8	1
H-1	H001-1518007		103319	AUC-S-1345	WASHER, lock, reg., S., 1/4 in.	1
	G509-0339251	01-5, 23		AUC-2UUA0583	PIPE, engine oil pump main discharge, w/NUT, assembly (HM-17182CS)	1
H-1	H001-1013017	01-5, 23	216920	AUC-S-14	SCREW, cap, hex-hd., S., 5/16-18NC-2 x 3/4 (supersedes SCREW, AUC-2UU01405)	14
	G509-0339250	01-6, 23		AUC-2UU0583	PIPE, engine oil pump outlet, w/NUTS, assembly (HM-16425CS)	1
	G156-0340672			AUC-2UU01346	PLUG, engine cylinder oil orifice (HM-4251A)	1
H-1	H001-1031004			AUC-2UU01405	SCREW, mounting, engine oil pump main discharge pipe (HM-4039A) (superseded by SCREW, AUC-S-14)	14
		01-23		AUC-S-8045	SLEEVE, compression tube fitting, 3/16 in. (viscometer gage)	1
		01-23		AUC-S-8046	SLEEVE, compression tube fitting, 1/4 in. (oil and viscometer gage lines)	4
		01-23		AUC-S-8005	TEE, compression tube, 1/4 in., 1/8 in. male and female pipe end (with nut and sleeve) (WH-W176x4) (oil pressure lines to viscometer and oil pressure gage) (supersedes TEE, AUC-2UU01491A)	1
				AUC-2UU01491A	TEE, engine oil pressure lines to viscometer and oil pressure gage (superseded by TEE, AUC-S-8005)	1
				AUC-2UU01366	TUBING, engine oil, crankcase to governor, w/LOOM, assembly	1
					(Composed of:	
				AUC-10SA2459	1 LOOM	
				AUC-S-5282	1 TUBING, S., 35 1/2 in. long)	
				AUC-16UU02843	TUBING, S., welded, anld., 1/4 in. O.D., 16 1/4 in. long (.250 O.D. x .028 wall thickness) (viscometer to flexible line)	1
		01-2, 23		AUC-16UU01199	VISCOMETER, assembly	1

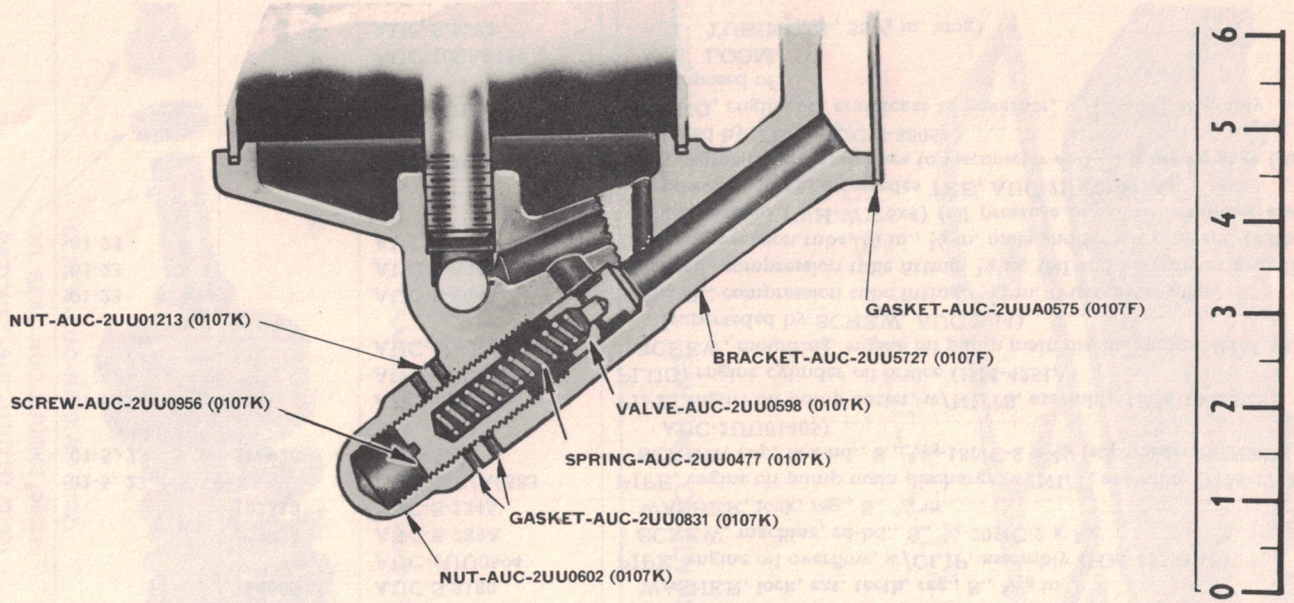

FIGURE 01-24 **ENGINE OIL PRESSURE REGULATOR** **RA PD 346166**

Note Symbol	Official Stock Number	Figure Number	Part Number		ITEM	Quan. Reqd. per Unit Assy.	Unit Price
			Ordnance	Manufacturer			
Col. 1	Col. 2	Col. 3	Col. 4	Col. 5	Col. 6	Col. 7	Col. 8
					0107K — OIL PRESSURE REGULATOR		
	G120-0193946	01-7, 24		AUC-2UU0831	GASKET, engine oil pressure relief valve adjusting screw (HM-8575A) (part of GASKET SET, AUC-2UU01200B)	2	
	G120-0314754	01-2, 22, 24		AUC-2UU0602	NUT, cap, engine oil pressure relief valve adjusting screw (HM-8574A)	1	
	G120-0314753	01-24		AUC-2UU01213	NUT, lock, engine oil pressure relief valve adjusting screw (HM-8573A)	1	
	G156-0340675	01-24		AUC-2UU0956	SCREW, adjusting, engine oil pressure relief valve (HM-8572A)	1	
	G509-0389505	01-24		AUC-2UU0477	SPRING, engine oil pressure relief valve (HM-8571A)	1	
	G120-0338805	01-24		AUC-2UU0598	VALVE, pressure relief, engine oil (HM-15243A)	1	

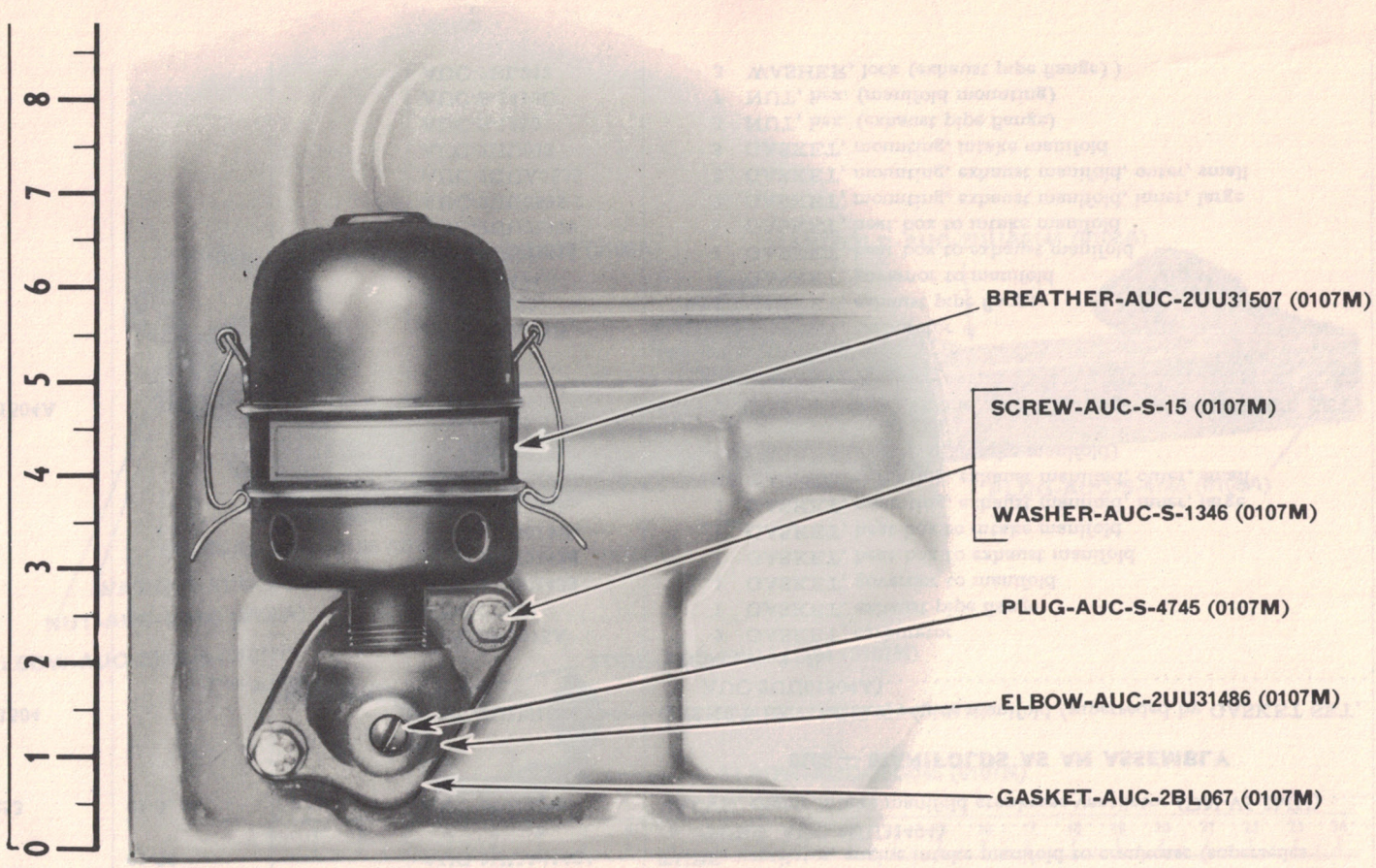

FIGURE 01-25 ENGINE CRANKCASE BREATHER RA PD 346167

					0107M — OIL BREATHER	
	4300-11817AS	01-1, 4, 25		AUC-2UU31507	BREATHER, engine crankcase, assembly (DN-2XC-277)	1
		01-25		AUC-2UU31486	ELBOW, engine crankcase breather (HM-11825B)	1
	H001-1013018	01-25	216959	AUC-S-15	SCREW, cap, hex-hd., S., 5/16-18NC-2 x 7/8	2
	H001-1518008	01-25	103320	AUC-S-1346	WASHER, lock, reg., S., 5/16 in.	2
	G067-1200525	01-25		AUC-2BL067	GASKET, engine crankcase breather elbow (HM-22564A) (part of GASKET SET, AUC-2UU01200B and KIT, repair, AUC-6UU0991A)	1
	H006-0283989	01-25	103883	AUC-S-4745	PLUG, pipe, slotted-hd., S., glvd., 1/8 in. (engine crankcase breather elbow)	1

Note Symbol	Official Stock Number	Figure Number	Part Number: Ordnance	Part Number: Manufacturer	ITEM	Quan. Reqd. per Unit Assy.	Unit Price
Col. 1	Col. 2	Col. 3	Col. 4	Col. 5	Col. 6	Col. 7	Col. 8
					0107N — CRANKCASE VENTILATOR		
		01-6, 26		AUC-25G045	ELBOW, compression tube, 3/8 in., 1/4 in. male pipe end (with nut and sleeve) (engine crankcase ventilator tube)	2	
	H006-0265475		144112	AUC-S-4171	ELBOW, street, M.I., 90 deg., glvd., 1/4 in. (engine crankcase ventilator tube)	1	
		01-6		AUC-2UU31494	TUBE, ventilator, engine intake manifold to crankcase (superseded by TUBE, AUC-2UUA41494)	1	
		01-26		AUC-2UUA41494	TUBE, ventilator, engine intake manifold to crankcase (supersedes TUBE, AUC-2UU31494)	1	
	G067-3427253	01-6, 26		AUC-2UU21487	VALVE, engine intake manifold crankcase ventilator (DN-V5-2MU)	1	
					0108 — MANIFOLDS AS AN ASSEMBLY		
	0600-2UU01504			AUC-2UU01504	GASKET SET, service, engine manifold (superseded by GASKET SET, AUC-2UU01504A)	1	
					(Composed of:		
				AUC-6N2375A	2 GASKET, carburetor		
				AUC-7C222	1 GASKET, exhaust pipe flange		
				AUC-2UU01433	1 GASKET, governor to manifold		
				AUC-2UU01428	1 GASKET, heat box to exhaust manifold		
				AUC-2UU01429	1 GASKET, heat box to intake manifold		
				AUC-2UU0535	2 GASKET, mounting, exhaust manifold, inner, large		
				AUC-2UUA0535	2 GASKET, mounting, exhaust manifold, outer, small		
				AUC-2UU013	3 GASKET, mounting, intake manifold)		
	0600-2UU01504A			AUC-2UU01504A	GASKET SET, service, engine manifold (supersedes GASKET SET, AUC-2UU01504)	1	
					(Composed of:		
				AUC-6N2375B	2 GASKET, carburetor		
				AUC-7C222	1 GASKET, exhaust pipe flange		
				AUC-S-1474	1 GASKET, governor to manifold		
				AUC-2UU01428	1 GASKET, heat box to exhaust manifold		
				AUC-2UU01429	1 GASKET, heat box to intake manifold		
				AUC-2UU0535	2 GASKET, mounting, exhaust manifold, inner, large		
				AUC-2UUA0535	2 GASKET, mounting, exhaust manifold, outer, small		
				AUC-2UU013	3 GASKET, mounting, intake manifold		
				AUC-S-1319	3 NUT, hex. (exhaust pipe flange)		
				AUC-S-1418C	7 NUT, hex. (manifold mounting)		
				AUC-7BL242	3 WASHER, lock (exhaust pipe flange))		

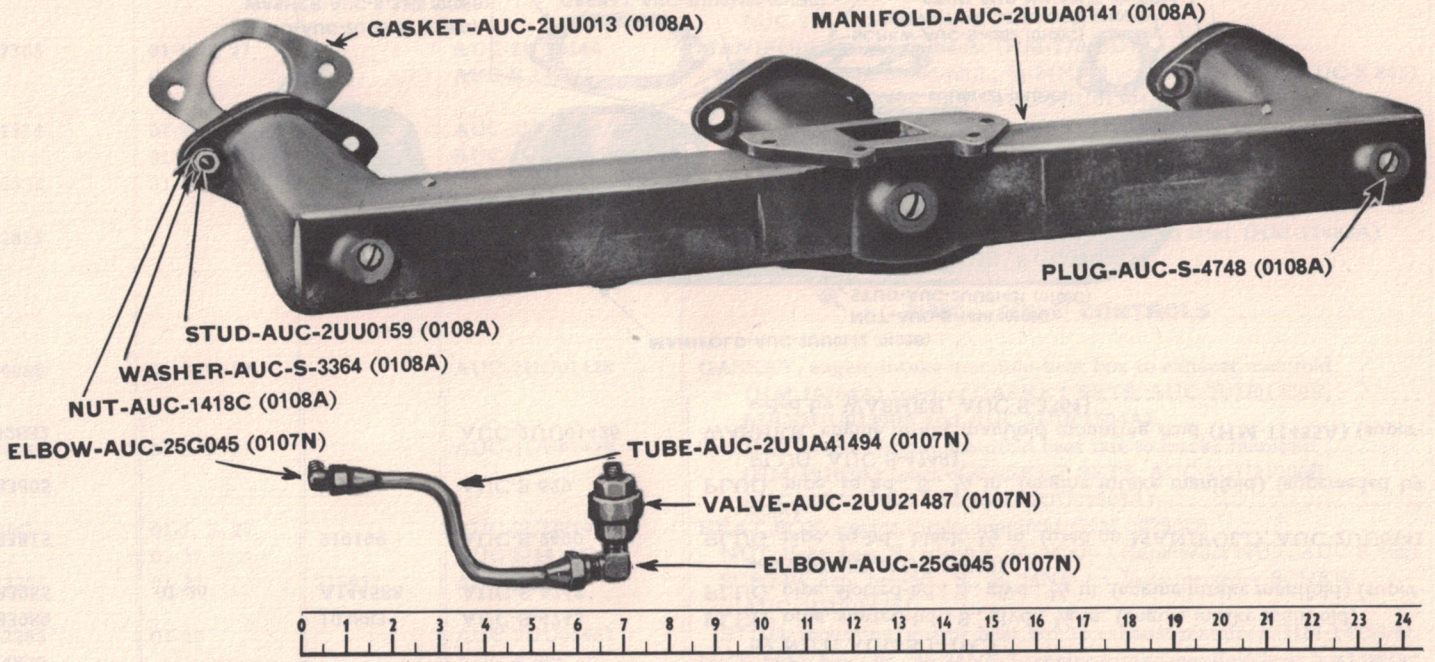

FIGURE 01-26 **ENGINE INTAKE MANIFOLD** **RA PD 346168**

				0108A — INTAKE MANIFOLD		
	G510-0194033	01-7, 26		AUC-2UU013	GASKET, mounting, engine intake manifold (HM-17056A) (part of GASKET SETS, AUC-2UU01200B, AUC-2UU01390A and AUC-2UU01504A)	3
	G509-0287350			AUC-2UU0143	MANIFOLD, engine intake (superseded by MANIFOLD, AUC-2UUA0141)	1
	G509-0287350			AUC-2UU0141	MANIFOLD, engine intake (HM-17047D) (superseded by MANIFOLD, AUC-2UUA0141)	1
	4300-17059D	01-1, 3, 4, 26		AUC-2UUA0141	MANIFOLD, engine intake (HM-17059D) (supersedes MANIFOLDS, AUC-2UU0143 and AUC-2UU0141)	1

Note Symbol	Official Stock Number	Figure Number	Part Number		ITEM	Quan. Reqd. per Unit Assy.	Unit Price
			Ordnance	Manufacturer			
Col. 1	Col. 2	Col. 3	Col. 4	Col. 5	Col. 6	Col. 7	Col. 8
					0108A — INTAKE MANIFOLD — Continued		
		01-26		AUC-S-1418C	NUT, light, hex., S., cd-pltd., 3/8-24NF-2 (supersedes NUT, AUC-S-805) (part of GASKET SET, AUC-2UU01504A)	6	
	G509-0391512	01-26		AUC-2UU0159	STUD, mounting, intake manifold (HM-11484A)	6	
	G120-0442832	01-26		AUC-S-3364	WASHER, plain, S., 7/8 O.D. x 13/32 I.D. x 3/16 thick (supersedes WASHER, AUC-2UU01426)	6	
	G156-0314870			AUC-S-805	NUT, light, hex., br., 3/8-24NF-2 (engine intake manifold) (superseded by NUT, AUC-S-1418C)	6	
H-6	H006-0283989		103883	AUC-S-4745	PLUG, pipe, slotted-hd., S., glvd., 1/8 in. (engine intake manifold)	1	
H-6	H006-0283985	01-26	A144588	AUC-S-4748	PLUG, pipe, slotted-hd., S., glvd., 1/4 in. (engine intake manifold) (supersedes PLUG, AUC-S-629)	3	
H-6	H006-0283815		219199	AUC-S-2490	PLUG, pipe, sq-hd., black, 1/2 in. (used on MANIFOLD, AUC-2UU0141 only)	1	
H-6	H006-0283805		219189	AUC-S-629	PLUG, pipe, sq-hd., S., 1/4 in. (engine intake manifold) (superseded by PLUG, AUC-S-4748)	4	
	G120-0442832			AUC-2UU01426	WASHER, engine intake manifold mounting stud (HM-11485A) (superseded by WASHER, AUC-S-3364)	6	

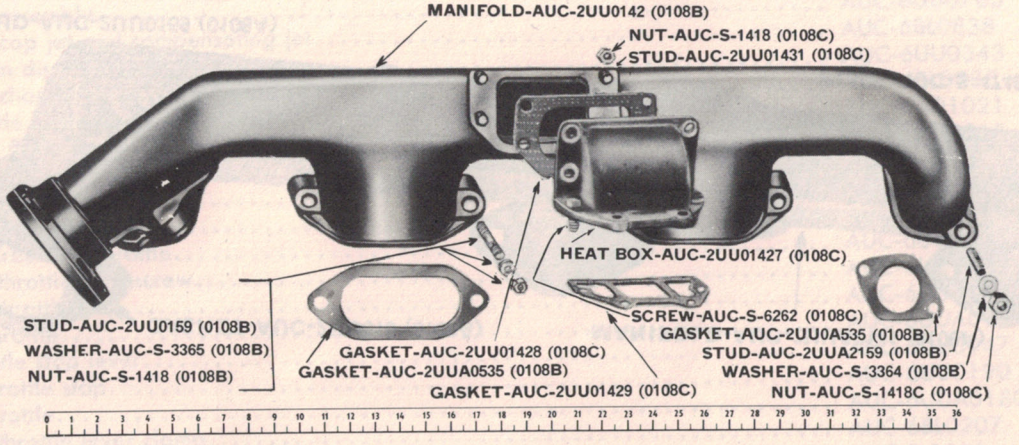

FIGURE 01-27 ENGINE EXHAUST MANIFOLD AND HEAT CONTROLS RA PD 346169

Afd. DOCUMENTATIE
Datum 22 juni 1960
Par.

					0108B — EXHAUST MANIFOLD	
	G510-0194038	01-7, 27		AUC-2UU0535	GASKET, mounting, engine exhaust manifold, inner, large (HM-17054A) (part of GASKET SETS, AUC-2UU01200B, AUC-2UU01390A and AUC-2UU01504A)	2
	G509-0194067	01-7, 27		AUC-2UUA0535	GASKET, mounting, engine exhaust manifold, outer, small (HM-17055A) (part of GASKET SETS, AUC-2UU01200B, AUC-2UU01390A and AUC-2UU01504A)	2
	G509-0287365	01-1, 4, 27		AUC-2UU0142	MANIFOLD, engine exhaust (HM-17048D)	1
		01-27		AUC-S-1418C	NUT, light, hex. S., cd-pltd., 3/8-24NF-2 (supersedes NUT, AUC-S-805) (part of GASKET SET, AUC-2UU01504A)	8
	G509-0391512	01-27		AUC-2UU0159	STUD, mounting, exhaust manifold (HM-11484A)	7
		01-27		AUC-2UUA2159	STUD, mounting, exhaust manifold, front (HM-11714A)	1
	G120-0442832	01-27		AUC-S-3364	WASHER, plain, S., 7/8 O.D. x 13/32 I.D. x 3/16 thick (supersedes WASHER, AUC-2UU01426)	8
	G120-0442832			AUC-2UU01426	WASHER, engine intake and exhaust manifold stud (HM-11485A) (superseded by WASHER, AUC-S-3364)	14
					0108C — HEAT CONTROLS	
	G156-0194038	01-6, 7, 27		AUC-2UU01428	GASKET, engine intake manifold heat box to exhaust manifold (HM-19764A) (part of GASKET SETS, AUC-2UU01200B, AUC-2UU01390A and AUC-2UU01504A)	1
	G509-0194020	01-6, 7, 27		AUC-2UU01429	GASKET, engine intake manifold heat box to intake manifold (HM-19763A) (part of GASKET SETS, AUC-2UU01200B, AUC-2UU01390A and AUC-2UU01504A)	1
	4300-20230C	01-1, 3, 27		AUC-2UU01427	HEAT BOX, engine intake manifold (HM-20230C)	1
		01-27		AUC-S-1418C	NUT, light, hex., S., cd-pltd., 3/8-24NF-2 (supersedes NUT, AUC-S-805)	4
H-1	H001-1013224	01-27	215957	AUC-S-6262	SCREW, cap, hex-hd., S., 3/8-24NF-2 x 7/8 (supersedes SCREW, AUC-2UU01436)	4
	G156-0392265	01-27		AUC-2UU01431	STUD, mounting, engine heat box to exhaust manifold (HM-14759A)	4
	G156-0314870			AUC-S-805	NUT, light, hex., br., 3/8-24NF-2 (engine intake manifold heat box) (superseded by NUT, AUC-S-1418C)	4
H-1	H001-1013031			AUC-2UU01436	SCREW, mounting, engine intake manifold heat box (HM-315A) (superseded by SCREW, AUC-S-6262)	4

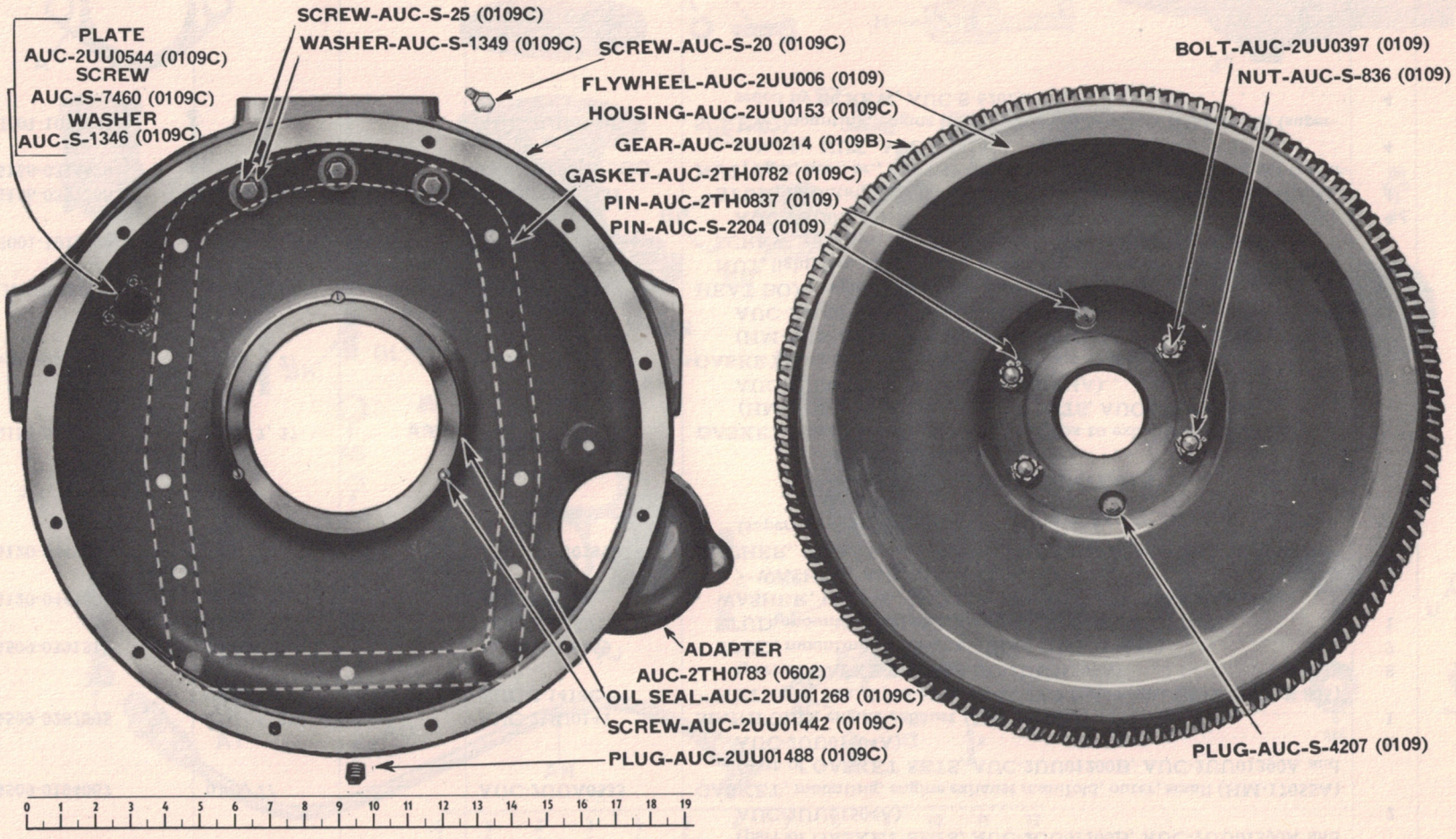

FIGURE 01-28 ENGINE FLYWHEEL, HOUSING AND RING GEAR RA PD 346170

Note Symbol	Official Stock Number	Figure Number	Part Number		ITEM	Quan. Reqd. per Unit Assy.	Unit Price
			Ordnance	Manufacturer			
Col. 1	Col. 2	Col. 3	Col. 4	Col. 5	Col. 6	Col. 7	Col. 8
					0109 — FLYWHEEL		
	G509-0185154	01-5, 28		AUC-2UU006	FLYWHEEL, engine (HM-17486C)	1	
	4300-17997AS			AUC-2UU0910	FLYWHEEL, engine, w/ring GEAR, assembly (HM-17997AS)	1	
	G509-0125545	01-5, 28		AUC-2UU0397	BOLT, engine flywheel (HM-7104A)	4	
H-1	H001-0713002	01-28	103048	AUC-S-836	NUT, castle, hex., s-fin., S., 9/16-18NF-2 (supersedes NUT, AUC-2UU01411)	4	
H-1	H001-0811052	01-28	103385	AUC-S-2204	PIN, cotter, split, S., 1/8 x 1	4	
H-1	H001-4220700			AUC-2UU01411	NUT, crankshaft flywheel bolt (HM-1382A) (superseded by NUT, AUC-S-836)	4	
	G067-1200385	01-5, 28		AUC-2TH0837	PIN, dowel, engine flywheel (HM-1707A)	2	
H-6	H006-0282430	01-5, 28	501591	AUC-S-4207	PLUG, expansion, S., 5/8 in. diam. (engine flywheel)	2	
					0109B — RING GEAR		
	G509-0194801	01-5, 28		AUC-2UU0214	GEAR, ring, engine flywheel (HM-15480C)	1	
					0109C — FLYWHEEL HOUSING		
	G509-0193854			AUC-2UU0782	GASKET, engine flywheel housing (HM-15065B) (superseded by GASKET, AUC-2TH0782)	1	
	G509-0193854	01-5, 7, 28		AUC-2TH0782	GASKET, engine flywheel housing (HM-15065B) (part of GASKET SETS, AUC-2UU01200B and AUC-2UU01514A) (supersedes GASKET, AUC-2UU0782)	1	
	4300-16900D	01-1, 2, 5, 6, 28		AUC-2UU0153	HOUSING, engine flywheel (HM-16900D)	1	
H-1	H001-1013070	01-5, 28	217051	AUC-S-20	SCREW, cap, hex-hd., S., 1/2-13NC-2 x 1	11	
H-1	H001-1013071	01-5, 28	217054	AUC-S-25	SCREW, cap, hex-hd., S., 1/2-13NC-2 x 1 1/4	3	
H-1	H001-1518011	01-28	103323	AUC-S-1349	WASHER, lock, reg., S., 1/2 in.	14	
H-13	H013-0500210	01-5, 7, 28		AUC-2UU01268	OIL SEAL, engine flywheel housing, assembly (HM-80634A) (part of GASKET SET, AUC-2UU01200B)	1	
	G509-0382008	01-5, 28		AUC-2UU01442	SCREW, flywheel housing oil seal (HM-14221A)	3	
	G156-0340203	01-28		AUC-2UU0544	PLATE, cover, engine flywheel housing timing hole (HM-18421A)	1	
H-1	H001-1013015	01-28	193988	AUC-S-7460	SCREW, cap, hex-hd., S., 5/16-18NC-2 x 1/2	3	
H-1	H001-1518008	01-28	103320	AUC-S-1346	WASHER, lock, reg., S., 5/16 in.	3	
		01-28		AUC-2UU01488	PLUG, pipe, special, 1 in. (HM-11615A) (engine flywheel housing)	1	

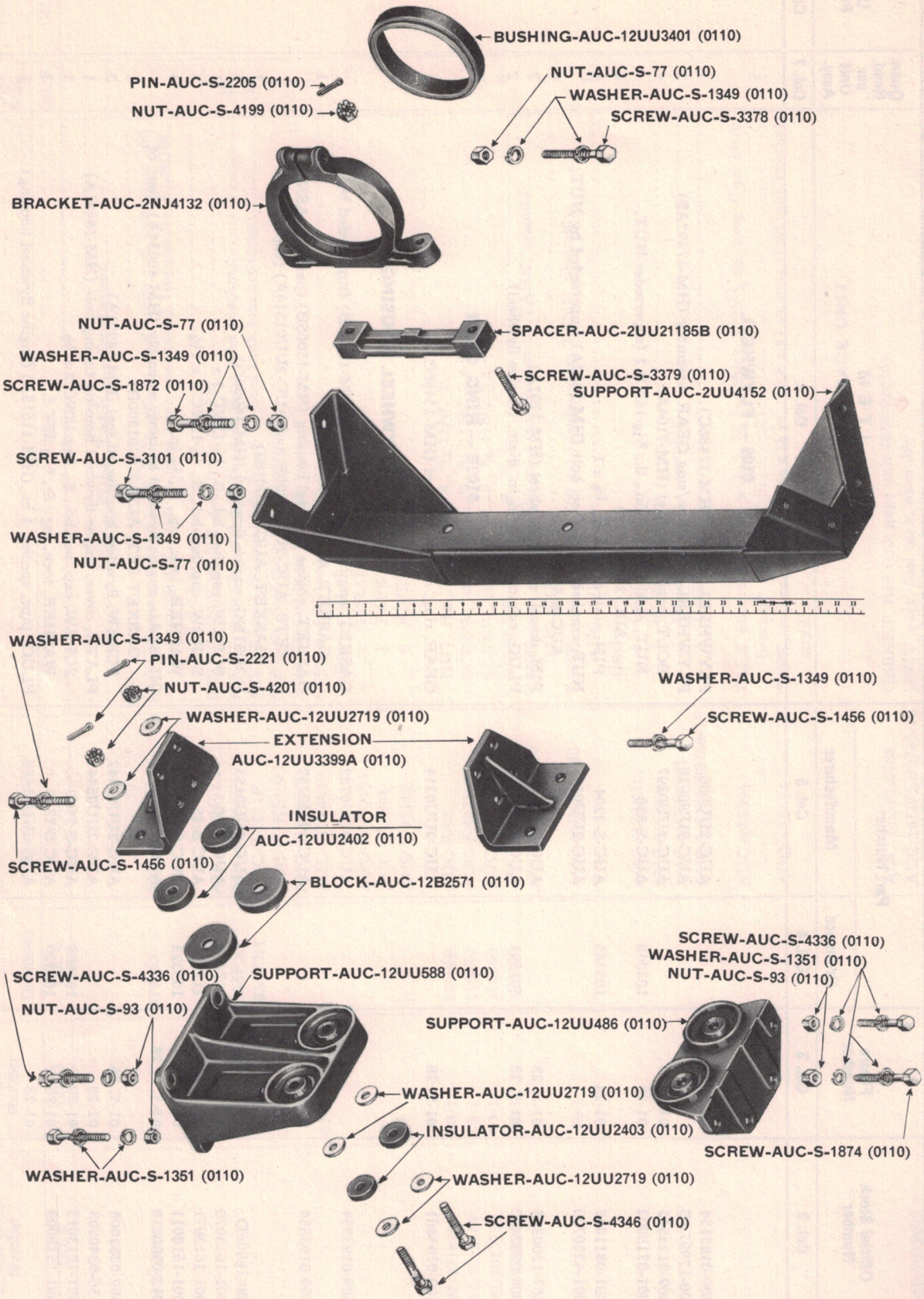

FIGURE 01-29 ENGINE MOUNTINGS RA PD 346171

Note Symbol	Official Stock Number	Figure Number	Part Number		ITEM	Quan. Reqd. per Unit Assy.	Unit Price
			Ordnance	Manufacturer			
Col. 1	Col. 2	Col. 3	Col. 4	Col. 5	Col. 6	Col. 7	Col. 8
					0110 — MOUNTINGS		
		01-29		AUC-12B2571	BLOCK, engine support, rear	4	
	0600-2NJ4132	01-3, 29		AUC-2NJ4132	BRACKET, engine support, front	1	
H-1	H001-0718005	01-29	220068	AUC-S-77	NUT, reg., hex., s-fin., S., ½-13NC-2	1	
H-1	H001-1013079	01-29	217078	AUC-S-3378	SCREW, cap, hex-hd., S., ½-13NC-2 x 3¼	1	
H-1	H001-1518011	01-29	103323	AUC-S-1349	WASHER, lock, reg., S., ½ in.	2	
	0600-12NJ3401			AUC-12NJ3401	BUSHING, engine support bracket, front (superseded by BUSHING, AUC-12UU3401) (part of KIT, repair, AUC-2UU01505)	1	
	0600-12UU3401	01-29		AUC-12UU3401	BUSHING, engine support bracket, front (supersedes BUSHING, AUC-12NJ3401) (part of KIT, repair, AUC-2UU01505S)	1	
				AUC-12UU3399	EXTENSION, engine support, rear (superseded by EXTENSION, AUC-12UU3399A)	2	
		01-1, 2, 4, 29		AUC-12UU3399A	EXTENSION, engine support, rear (supersedes EXTENSION, AUC-12UU3399)	2	
H-1	H001-0116055	01-29	227651	AUC-S-1456	SCREW, cap, hex-hd., alloy-S., ½-13NC-2 x 1½	8	
H-1	H001-1518011	01-29	103323	AUC-S-1349	WASHER, lock, reg., S., ½ in.	8	
	0600-12NJ2403			AUC-12NJ2403	INSULATOR, engine support, rear, lower (superseded by INSULATOR, AUC-12UU2403) (part of KIT, repair, AUC-2UU01505)	4	
	0600-12UU2403			AUC-12UU2403	INSULATOR, engine support, rear, lower (supersedes INSULATOR, AUC-12NJ2403) (part of KIT, repair, AUC-2UU01505S)	4	
				AUC-12NJ2402	INSULATOR, engine support, rear, lower (superseded by INSULATOR, AUC-12UU2402) (part of KIT, repair, AUC-2UU01505)	4	
	0600-12UU2402	01-29		AUC-12UU2402	INSULATOR, engine support, rear, upper (supersedes INSULATOR, AUC-12NJ2402) (part of KIT, repair, AUC-2UU01505S)	4	
H-1	H001-0722007	01-29	218488	AUC-S-4201	NUT, slotted, heavy, S., ⅝-11NC-2	4	
H-1	H001-0811064	01-29	103397	AUC-S-2221	PIN, cotter, split, S., 5/32 x 1¼	4	
H-1	H001-1014023	01-29	220678	AUC-S-4346	SCREW, cap, hex-hd., S., dld. f/c-pin, ⅝-11NC-2 x 3½	4	
	0600-12UU2719			AUC-12UU2719	WASHER, plain, S., 1½ O.D. x 21/32 I.D. x 3/16 thick	12	
				AUC-2UU01505	KIT, repair, engine mounting (superseded by KIT, repair, AUC-2UU01505S) (Composed of:	1	
				AUC-12NJ3401	1 BUSHING, front support		
				AUC-12NJ2403	4 INSULATOR, rear support, lower		
				AUC-12NJ2402	4 INSULATOR, rear support, upper)		
				AUC-2UU01505S	KIT, repair, engine mounting (supersedes KIT, repair, AUC-2UU01505) (Composed of:	1	
				AUC-12UU3401	1 BUSHING, front support		
				AUC-12UU2403	4 INSULATOR, rear support, lower		
				AUC-12UU2402	4 INSULATOR, rear support, upper)		

Note Symbol	Official Stock Number	Figure Number	Part Number		ITEM	Quan. Reqd. per Unit Assy.	Unit Price
			Ordnance	Manufacturer			
Col. 1	Col. 2	Col. 3	Col. 4	Col. 5	Col. 6	Col. 7	Col. 8
					0110 — MOUNTINGS — Continued		
		01-29		AUC-2UU21185B	SPACER, engine support bracket, front	1	
H-1	H001-0722005	01-29	218485	AUC-S-4199	NUT, slotted, heavy, S., ½-13NC-2	2	
H-1	H001-0811053	01-29	103386	AUC-S-2205	PIN, cotter, split, S., ⅛ x 1¼	2	
		01-29		AUC-S-3379	SCREW, cap, hex-hd., S., dld. f/c-pin, ½-13NC-2 x 3¼	2	
		01-29, 15-1		AUC-2UU4152	SUPPORT, engine, front	1	
H-1	H001-0718005	01-29	220068	AUC-S-77	NUT, reg., hex., s-fin., S., ½-13NC-2	6	
H-1	H001-1013072	01-29	217055	AUC-S-1872	SCREW, cap, hex-hd., S., ½-13NC-2 x 1½	3	
H-1	H001-1013073	01-29	227656	AUC-S-3101	SCREW, cap, hex-hd., alloy-S., ½-13NC-2 x 1¾	3	
H-1	H001-1518011	01-29	103323	AUC-S-1349	WASHER, lock, reg., S., ½ in.	12	
		01-29, 15-1		AUC-12UU588	SUPPORT, engine, rear, L.H.	1	
H-1	H001-0718007	01-29	220080	AUC-S-93	NUT, reg., hex., s-fin., S., ⅝-11NC-2	4	
H-1	H001-1013107	01-29	216053	AUC-S-4336	SCREW, cap, hex-hd., S., ⅝-11NC-2 x 2½	2	
H-1	H001-1013108	01-29	216054	AUC-S-1874	SCREW, cap, hex-hd., S., ⅝-11NC-2 x 2¾	2	
H-1	H001-1518013	01-29	103325	AUC-S-1351	WASHER, lock, reg., S., ⅝ in.	8	
		01-29, 15-1		AUC-12UU486	SUPPORT, engine, rear, R.H.	1	
H-1	H001-0718007	01-29	220080	AUC-S-93	NUT, reg., hex., s-fin., S., ⅝-11NC-2	4	
H-1	H001-1013107	01-29	216053	AUC-S-4336	SCREW, cap, hex-hd., S., ⅝-11NC-2 x 2½	2	
H-1	H001-1013108	01-29	216054	AUC-S-1874	SCREW, cap, hex-hd., S., ⅝-11NC-2 x 2¾	2	
H-1	H001-1518013	01-29	103325	AUC-S-1351	WASHER, lock, reg., S., ⅝ in.	8	
					0113B — ACCESSORY DRIVE		
		01-30		AUC-5UUB013	BUSHING, engine accessory drive shaft (HM-15048B)	1	
	G156-0135400			AUC-5UU0602	CHAIN, engine water pump flexible coupling (HM-16143A)	1	
	4300-18354AS			AUC-5UU0280	COUPLING, flexible, engine water pump, assembly (HM-18354AS)	1	
					(Composed of:		
				AUC-5UU0602	1 CHAIN		
				AUC-5UU0604	1 COVER		
				AUC-5UU0599	1 HUB, accessory drive shaft		
				AUC-5UU0601	1 HUB, pump shaft		
				AUC-5UU0603	1 LINK		
				AUC-5UU0605	1 LOCK)		
	G156-0338705			AUC-5UU0598	PIN, engine water pump flexible coupling (HM-8084A)	2	
	G156-0385269			AUC-5UU0604	COVER, engine water pump flexible coupling chain connecting link (HM-18262A) (part of KIT, repair, AUC-5UU0643)	1	
	G156-0194028	01-7, 30		AUC-2UU0625	GASKET, engine accessory drive shaft sleeve (HM-15149A) (part of GASKET SET, AUC-2UU01200B)	2	

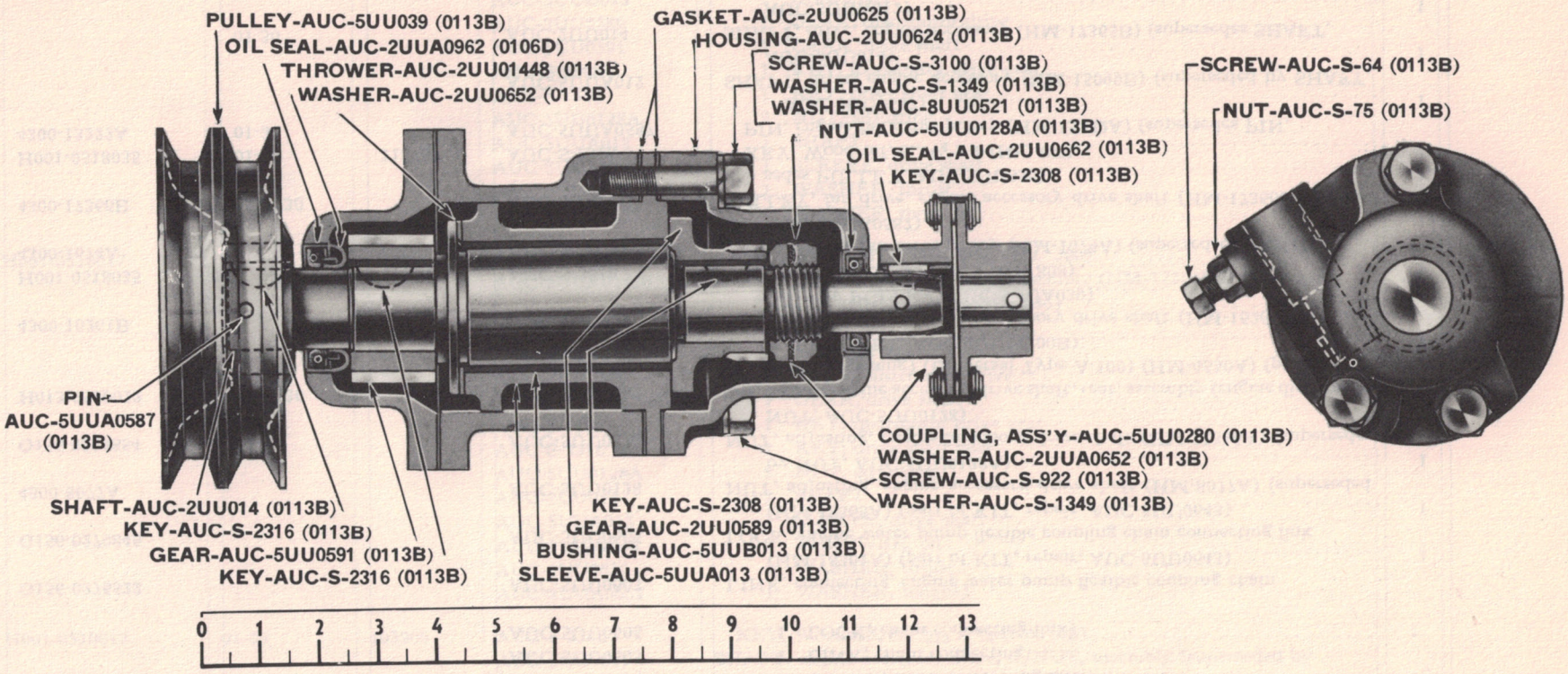

FIGURE 01-30 **ENGINE ACCESSORY DRIVE** **RA PD 346172**

	G156-0196007	01-18, 30		AUC-5UU0591	GEAR, drive, engine accessory drive shaft (HM-15195B)	1
H-1	H001-0518035	01-30	113782	AUC-S-2316	KEY, Woodruff, S., 1/4 x 1 (No. 808)	1
	4300-15096A	01-30		AUC-2UU0589	GEAR, engine accessory drive shaft distributor drive (HM-15096A)	1
H1-	H001-0518017	01-30	103906	AUC-S-2308	KEY, Woodruff, S., 5/32 x 3/4 (No. 506)	1
	4300-16507C	01-30		AUC-2UU0624	HOUSING, engine distributor support (HM-16507C)	1
H-1	H001-0718003	01-30	220066	AUC-S-75	NUT, reg., hex., s-fin., S., 3/8-16NC-2	1
H-1	H001-1013033	01-30	213733	AUC-S-64	SCREW, cap, hex-hd., S., 3/8-16NC-2 x 1 1/4	1
H-1	H001-1013073	01-30	217056	AUC-S-3100	SCREW, cap, hex-hd., S., 1/2-13NC-2 x 1 3/4	1
H-1	H001-1013074	01-30	217057	AUC-S-922	SCREW, cap, hex-hd., S., 1/2-13NC-2 x 2	1
H-1	H001-1013079		217078	AUC-S-3378	SCREW, cap, hex-hd., S., 1/2-13NC-2 x 3 1/4	1
		01-30		AUC-8UU0521	WASHER, plain, copper, 15/16 O.D. x 33/64 I.D. x 1/16 thick (HM-4632A)	1

Note Symbol	Official Stock Number	Figure Number	Part Number		ITEM	Quan. Reqd. per Unit Assy.	Unit Price
			Ordnance	Manufacturer			
Co . 1	Col. 2	Col. 3	Col. 4	Col. 5	Col. 6	Col. 7	Col. 8
					0113B — ACCESSORY DRIVE — Continued		
	H001-1518011	01-30	103323	AUC-S-1349	WASHER, lock, reg., S., ½ in.	3	
	G156-0389840			AUC-5UU0599	HUB, engine water pump flexible coupling (accessory drive shaft) (HM-18364A)	1	
				AUC-5UU0601	HUB, engine water pump flexible coupling (pump shaft) (HM-18359A)	1	
	0600-5UU0643			AUC-5UU0643	KIT, repair, engine water pump coupling chain link (Composed of:	1	
				AUC-5UU0604	1 COVER, chain connecting link		
				AUC-5UU0603	1 LINK, chain connecting		
				AUC-5UU0605	1 LOCK, chain connecting link)		
	G156-0276522			AUC-5UU0603	LINK, connecting, engine water pump flexible coupling chain (HM-18361A) (part of KIT, repair, AUC-5UU0643)	1	
	G156-0279846			AUC-5UU0605	LOCK, engine water pump flexible coupling chain connecting link (HM-18363A) (part of KIT, repair, AUC-5UU0643)	1	
	4300-8077A			AUC-5UU0128	NUT, adjusting, engine accessory drive shaft (HM-8077A) (superseded by NUT, AUC-5UU0128A)	1	
	G156-0314854	01-30		AUC-5UU0128A	NUT, adjusting, engine accessory drive shaft (HM-11316A) (supersedes NUT, AUC-5UU0128)	2	
H-13	H013-0500022	01-7, 30		AUC-2UU0662	OIL SEAL, engine accessory drive shaft, rear, assembly (engine distributor support housing) (Universal Type A-100) (HM-4550A) (part of GASKET SET, AUC-2UU01200B)	1	
	4300-16261B			AUC-5UU039	PULLEY, fan drive, engine accessory drive shaft (HM-16261B) (superseded by PULLEY, AUC-5UUA039)	1	
H-1	H001-0518035		113782	AUC-S-2316	KEY, Woodruff, S., ¼ x 1 (No. 808)	1	
	4300-1674A			AUC-5UU0587	PIN, engine fan drive pulley (HM-1674A) (superseded by PIN, AUC-5UUA0587)	1	
	4300-17366B	01-3, 30		AUC-5UUA039	PULLEY, fan drive, engine accessory drive shaft (HM-17366B) (supersedes PULLEY, AUC-5UU039)	1	
H-1	H001-0518035	01-30	113782	AUC-S-2316	KEY, Woodruff, S., ¼ x 1 (No. 808)	1	
	4300-13222A	01-30		AUC-5UUA0587	PIN, engine fan drive pulley (HM-13222A) (supersedes PIN, AUC-5UU0587)	1	
				AUC-5UUA012	SHAFT, drive, engine accessory (HM-15099B) (superseded by SHAFT, AUC-2UU014)	1	
		01-30		AUC-2UU014	SHAFT, drive, engine accessory (HM-17365B) (supersedes SHAFT, AUC-5UUA012)	1	
				AUC-5UU086	SHAFT, drive, engine accessory, assembly (HM-15099BSY) (superseded by SHAFT, assembly, AUC-2UUA01430)	1	

			AUC-5UUB013	(Composed of: 1 BUSHING	
			AUC-2UU0589	1 GEAR, distributor drive	
			AUC-5UU0591	1 GEAR, drive shaft	
			AUC-S-2308	1 KEY, distributor drive gear	
			AUC-S-2316	1 KEY, drive shaft gear	
			AUC-5UU0128A	2 NUT, adjusting	
			AUC-5UUA012	1 SHAFT	
			AUC-5UUA013	1 SLEEVE, drive shaft	
			AUC-2UU0652	1 WASHER, thrust	
			AUC-2UUA0652	1 WASHER, tongue)	
H001-0518017		103906	AUC-S-2308	KEY, Woodruff, S., 5/32 x 3/4 (No. 506)	1
			AUC-2UUA01430	SHAFT, drive, engine accessory, assembly (HM-17364BS) (supersedes SHAFT, assembly, AUC-5UU086)	1
				(Composed of:	
			AUC-5UUB013	1 BUSHING	
			AUC-2UU0589	1 GEAR, distributor drive	
			AUC-5UU0591	1 GEAR, drive shaft	
			AUC-S-2308	1 KEY, distributor drive gear	
			AUC-S-2316	1 KEY, drive shaft gear	
			AUC-5UU0128A	2 NUT, adjusting	
			AUC-2UU014	1 SHAFT	
			AUC-5UUA013	1 SLEEVE, drive shaft	
			AUC-2UU01448	1 THROWER, oil	
			AUC-2UU0652	2 WASHER, thrust	
			AUC-2UUA0652	1 WASHER, tongue)	
H001-0518017	01-30	103906	AUC-S-2308	KEY, Woodruff, S., 5/32 x 3/4 (No. 506)	1
			AUC-5UU0641	SHAFT, engine accessory drive, w/NUT, assembly (superseded by SHAFT, w/NUT, assembly, AUC-2UU01663)	1
4300-17367AS			AUC-2UU01663	SHAFT, engine accessory drive, w/NUT, assembly (HM-17367AS) (supersedes SHAFT, w/NUT, assembly, AUC-5UU0641)	1
				(Composed of:	
			AUC-5UU0128A	2 NUT, adjusting	
			AUC-2UU014	1 SHAFT	
			AUC-2UUA0652	1 WASHER, tongue)	
G156-0387093	01-30		AUC-5UUA013	SLEEVE, engine accessory drive shaft (HM-15056B)	1
			AUC-5UUA086	SLEEVE, engine accessory drive shaft, w/BUSHING, assembly (HM-15056BS)	1
				(Composed of:	
			AUC-5UUB013	1 BUSHING	
			AUC-5UUA013	1 SLEEVE	
G509-0410202	01-30		AUC-2UU01448	THROWER, oil, engine accessory drive shaft (HM-19053A)	1
G156-0443033	01-30		AUC-2UU0652	WASHER, thrust, engine accessory drive shaft, bz. (HM-4342A)	2
4300-11697A	01-30		AUC-2UUA0652	WASHER, tongue, engine accessory drive shaft (HM-11697A)	1

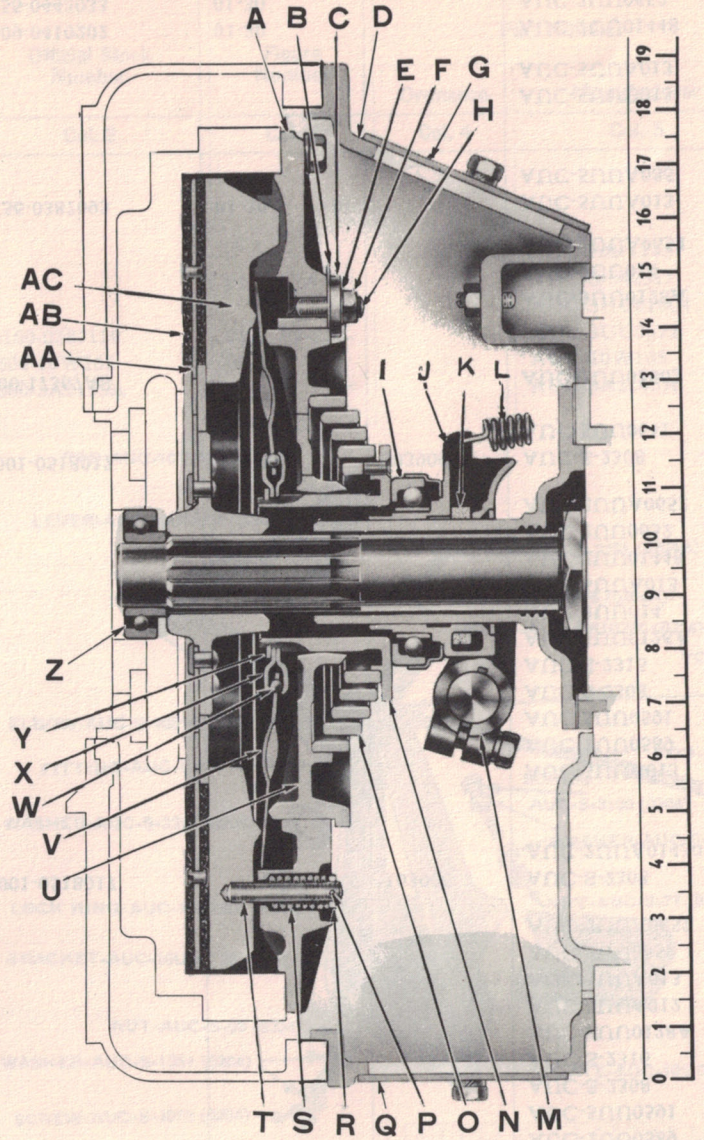

KEY	ITEM	PART NO.	GROUP
A	RING, clutch flywheel	AUC-3ZT0677C	0202
B	SHIM, clutch flywheel ring	AUC-3B0559	0202
C	STRAP, adjusting	AUC-3B0682	0202
D	HOUSING, clutch	AUC-3UU5343	0207
E	WASHER, lock	AUC-3B0981	0202
F	NUT, flywheel ring stud	AUC-S-1418	0202
G	PLATE, clutch housing cover, top	AUC-2TF352	0207
H	STUD, clutch flywheel ring	AUC-3B0592	0202
I	BEARING, trunnion block	AUC-3BM2169A	0203
J	BLOCK, trunnion	AUC-3B3125	0203
K	WICK, oil	AUC-3A2145A	0203
L	SPRING, retracting	AUC-10W165	0203
M	LEVER, clutch release trunnion block	AUC-10T258	0204A
N	SLEEVE, clutch release	AUC-3UU0622	0203
O	SPRING, clutch pressure plate	AUC-3B0522	0202
P	PIN, retracting spring	AUC-3UU0544	0202
Q	PLATE, bottom	AUC-3TF2469	0207
R	WASHER, retracting spring	AUC-3UU0685	0202
S	SPRING, retracting	AUC-3ZT0683	0202
T	STUD, pressure plate	AUC-3ZT0749	0202
U	PLATE, adjusting	AUC-3ZT0681C	0202
V	LEVER, pressure	AUC-3B046B	0203
W	BALL, lever locking	AUC-3B0982	0203
X	RING, fulcrum	AUC-3UU0674	0202
Y	SNAP RING, release sleeve	AUC-3B0673	0202
Z	BEARING, clutch pilot	AUC-3B0243A	0205
AA	DISC, w/FACING, assembly	AUC-3UU0770	0201
AB	FACING, clutch disc	AUC-3C045	0201A
AC	PLATE, clutch pressure	AUC-3ZT0679	0202

FIGURE 02-1

CLUTCH ASSEMBLY

RA PD 346173

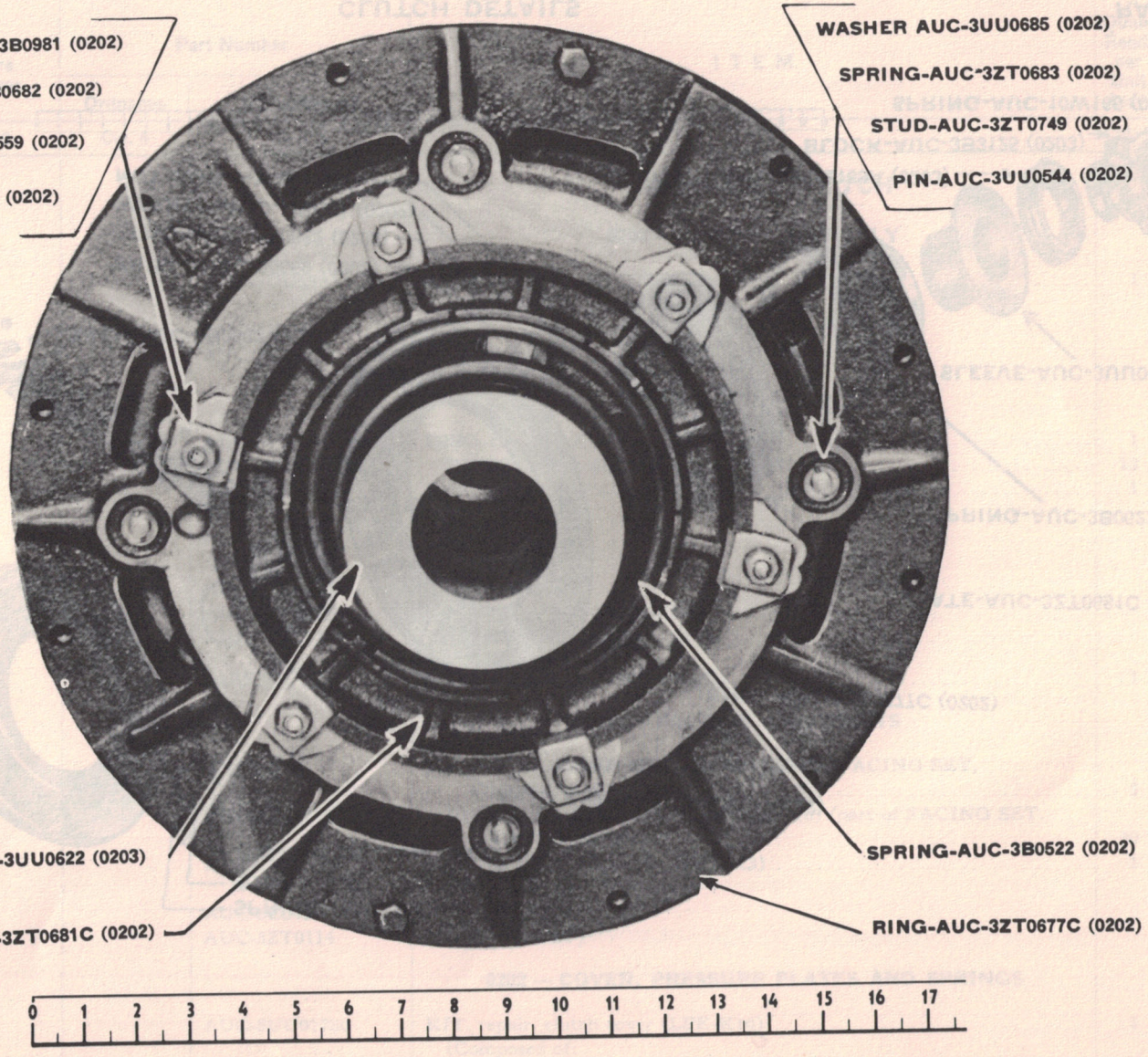

FIGURE 02-2 CLUTCH ASSEMBLY RA PD 346174

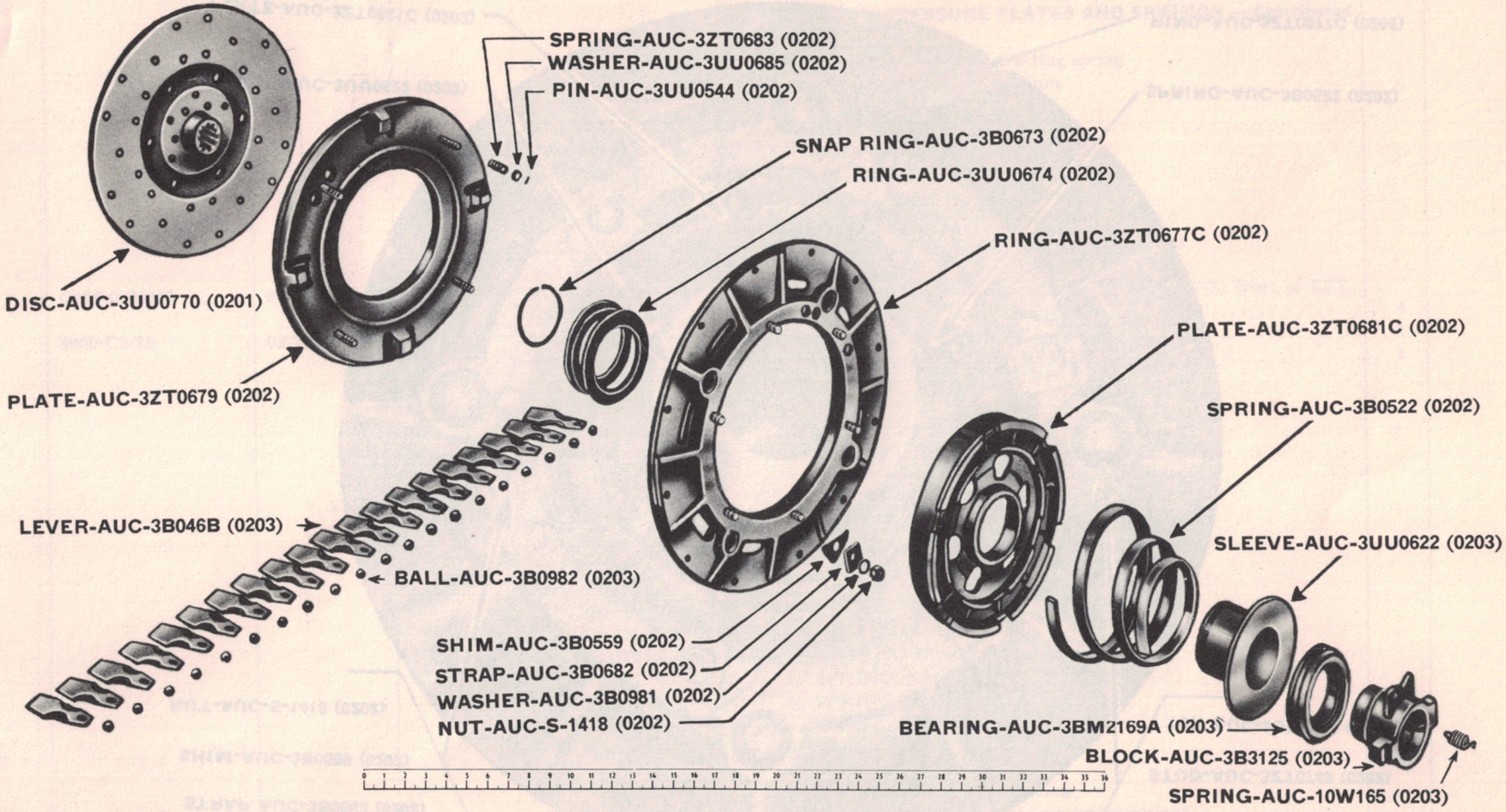

FIGURE 02-3 CLUTCH DETAILS RA PD 346175

Note Symbol	Official Stock Number	Figure Number	Part Number		ITEM	Quan. Reqd. per Unit Assy.	Unit Price
			Ordnance	Manufacturer			
Col. 1	Col. 2	Col. 3	Col. 4	Col. 5	Col. 6	Col. 7	Col. 8
					GROUP 02—CLUTCH		
					0200 — CLUTCH ASSEMBLY		
				AUC-3UU530	CLUTCH, w/driven DISC, assembly	1	
					(Composed of:		
				AUC-3UU0770	1 DISC, w/FACING, assembly		
				AUC-3UU0800	1 PLATE, cover, assembly)		
					0201 — CLUTCH DISC		
				AUC-3UU034	DISC, clutch (LPE-C19-13)	1	
				AUC-3UU0114	RIVET, clutch disc and hub (LPE-X14-21)	12	
		02-3		AUC-3UU0770	DISC, clutch, w/FACING, assembly (LPE-150-6-173)	1	
					(Composed of:		
				AUC-3UU034	1 DISC		
				AUC-3C045	2 FACING		
				AUC-3UU042	1 HUB		
				AUC-3UU0114	12 RIVET, disc and hub		
				AUC-3ZT0114	30 RIVET, facing)		
				AUC-3UU042	HUB, clutch disc (LPE-C16-122)	1	
					0201A — FACINGS AND RIVETS		
				AUC-3C045	FACING, clutch disc (LPE-C18-86) (part of FACING SET, AUC-3UU045S)	2	
	G160-0370083			AUC-3ZT0114	RIVET, clutch disc facing (LPE-X14-16) (part of FACING SET, AUC-3UU045S)	30	
	5900-K3			AUC-3UU045S	FACING SET, clutch disc (LPE-K3)	1	
					(Composed of:		
				AUC-3C045	2 FACING		
				AUC-3ZT0114	36 RIVET)		
					0202 — COVER, PRESSURE PLATES AND SPRINGS		
				AUC-3UU01730	KIT, repair, clutch cover (LPE-K16)	1	
					(Composed of:		
				AUC-3B0982	20 BALL, locking		
				AUC-3B046B	20 LEVER, pressure		
				AUC-S-1418	6 NUT, flywheel ring stud		

Note Symbol	Official Stock Number	Figure Number	Part Number		ITEM	Quan. Reqd. per Unit Assy.	Unit Price
			Ordnance	Manufacturer			
Col. 1	Col. 2	Col. 3	Col. 4	Col. 5	Col. 6	Col. 7	Col. 8
					0202 — COVER, PRESSURE PLATES AND SPRINGS — Continued		
				AUC-3UU0544	4 PIN, pressure plate retracting spring		
				AUC-3UU0674	2 RING, release sleeve fulcrum		
				AUC-3B0559	42 SHIM, flywheel ring		
				AUC-3UU0622	1 SLEEVE, release		
				AUC-3B0673	1 SNAP RING, release		
				AUC-3ZT0683	4 SPRING, retracting, pressure plate		
				AUC-3B0682	6 STRAP, adjusting, flywheel ring		
				AUC-3B0981	6 WASHER, lock, flywheel ring stud		
				AUC-3UU0685	4 WASHER, pressure plate retracting spring)		
	G160-0338691	02-2, 3		AUC-3UU0544	PIN, clutch pressure plate retracting spring (LPE-C7-3) (part of KIT, repair, AUC-3UU01730)	4	
	5900-C3-36	02-2, 3		AUC-3ZT0681C	PLATE, adjusting, clutch (LPE-C3-36)	1	
				AUC-3UU0800	PLATE, clutch cover, assembly (LPE-150-1-146)	1	
					(Composed of:		
				AUC-3B0982	20 BALL, locking		
				AUC-3B046B	20 LEVER, pressure		
				AUC-S-1418	6 NUT, flywheel ring stud		
				AUC-3UU0544	4 PIN, pressure plate retracting spring		
				AUC-3UU01004	1 PIN, spring stop		
				AUC-3ZT0681C	1 PLATE, adjusting		
				AUC-3ZT0679	1 PLATE, pressure		
				AUC-3ZT0677C	1 RING, flywheel		
				AUC-3UU0674	2 RING, release sleeve fulcrum		
				AUC-3B0559	42 SHIM, flywheel ring		
				AUC-3UU0622	1 SLEEVE, release		
				AUC-3B0673	1 SNAP RING, release		
				AUC-3B0522	1 SPRING, pressure plate		
				AUC-3ZT0683	4 SPRING, retracting, pressure plate		
				AUC-3B0682	6 STRAP, adjusting, flywheel ring		
				AUC-3B0592	6 STUD, flywheel ring		
				AUC-3ZT0749	4 STUD, pressure plate		
				AUC-3B0981	6 WASHER, lock, flywheel ring		
				AUC-3UU0685	4 WASHER, pressure plate retracting spring)		
H-1	H001-1013032		213729	AUC-S-23	SCREW, cap, hex-hd., S., 3/8-16NC-2 x 1	12	
H-1	H001-7017680		114606	AUC-S-3175	WASHER, lock, ext. teeth, reg., S., 3/8 in.	12	

	G160-0340212	02-3		AUC-3ZT0679	PLATE, clutch pressure (LPE-C1-9)	1
				AUC-3UU0679S	PLATE, clutch pressure, w/STUDS, assembly (LPE-AC1-9)	1
					(Composed of:	
				AUC-3ZT0679	1 PLATE, pressure	
				AUC-3ZT0749	4 STUD, pressure plate)	
		01-4, 02-2, 3		AUC-3ZT0677C	RING, clutch flywheel (LPE-C2-27)	1
H-1	H001-4167600	01-4, 02-2, 3	103026	AUC-S-1418	NUT, light, hex., s-fin., S., 3/8-24NF-2 (part of KIT, repair, AUC-3UU01730)	6
	G160-0392260			AUC-3B0592	STUD, clutch flywheel ring (LPE-X21-12)	6
H-1	H001-1519011	02-2, 3		AUC-3B0981	WASHER, lock, clutch flywheel ring stud nut (LPE-X10-23) (part of KIT, repair, AUC-3UU01730)	6
		02-3		AUC-3UU0674	RING, clutch release sleeve fulcrum (LPE-C13-11) (part of KIT, repair, AUC-3UU01730)	2
	G116-1784815	02-2, 3		AUC-3B0559	SHIM, clutch flywheel ring, .015 (LPE-C20-1) (part of KIT, repair, AUC-3UU01730)	42
	G116-0302640	02-3		AUC-3B0673	SNAP RING, clutch release sleeve (LPE-C11-4) (part of KIT, repair, AUC-3UU01730)	1
	G116-1789819	01-4, 02-2, 3		AUC-3B0522	SPRING, clutch pressure plate (LPE-C5-4)	1
	G160-0389780	02-2, 3		AUC-3ZT0683	SPRING, retracting, clutch pressure plate (LPE-C6-4) (part of KIT, repair, AUC-3UU01730)	4
	G116-1792210	02-2, 3		AUC-3B0682	STRAP, adjusting, clutch flywheel ring (LPE-C10-2) (part of KIT, repair, AUC-3UU01730)	6
	G160-0392259	02-2		AUC-3ZT0749	STUD, clutch pressure plate (LPE-X21-11)	4
	G160-0442989	02-2, 3		AUC-3UU0685	WASHER, clutch pressure plate retracting spring (LPE-C66-1) (part of KIT, repair, AUC-3UU01730)	4
					0203 — RELEASE YOKE, BEARINGS AND FORK	
	G116-1515855	02-3		AUC-3B0982	BALL, clutch lever locking (LPE-X17-7) (part of KIT, repair, AUC-3UU01730)	20
	0170-A-959-1	02-3		AUC-3BM2169A	BEARING, clutch trunnion block (AB-A-959-1)	1
	0600-3B3125	02-3		AUC-3B3125	BLOCK, trunnion, clutch release	1
				AUC-3UU2315	BRACKET, clutch oil line (WH-204060)	1
				AUC-S-8067	CONNECTOR, compression tube, 1/4 in., 1/8 in. male pipe end (with nut and sleeve) (WH-W168x4) (clutch oil line, upper)	2
		02-3		AUC-3B046B	LEVER, pressure, clutch (LPE-C8-21)	20
				AUC-3UU41020	LINE, clutch oil, assembly (copper tubing) (superseded by LINE, assembly, AUC-3UU41020A)	1
				AUC-3UU41020A	LINE, clutch oil, assembly (steel tubing) (superseded by CONNECTOR, AUC-S-8067 (2), LINE, AUC-3UUA41136 and LINE, assembly, AUC-3UU21720)	1
				AUC-3UU21720	LINE, clutch oil, lower, assembly	1
				AUC-3UUA41136	LINE, clutch oil, upper (supersedes with addition of CONNECTOR, AUC-S-8067 and LINE, assembly, AUC-3UU21720, LINE, assembly, AUC-3UU41020A)	1

Note Symbol	Official Stock Number	Figure Number	Part Number		ITEM	Quan. Reqd. per Unit Assy.	Unit Price
			Ordnance	Manufacturer			
Col. 1	Col. 2	Col. 3	Col. 4	Col. 5	Col. 6	Col. 7	Col. 8
					0203 — RELEASE YOKE, BEARINGS AND FORK — Continued		
				AUC-10R1148	LINK, clutch trunnion block retracting spring	1	
		01-1, 2, 4		AUC-S-3423D	OILER, clutch (GTS-110 Style B)	1	
				AUC-3UU01004	PIN, stop, clutch release sleeve spring (LPE-C40-1)	1	
	G160-0387119	01-4, 02-2, 3		AUC-3UU0622	SLEEVE, clutch release (LPE-C4-35)	1	
	0600-10W165	02-3		AUC-10W165	SPRING, retracting, clutch trunnion block	1	
	0600-3A2145A			AUC-3A2145A	WICK, oil, clutch release sleeve	1	

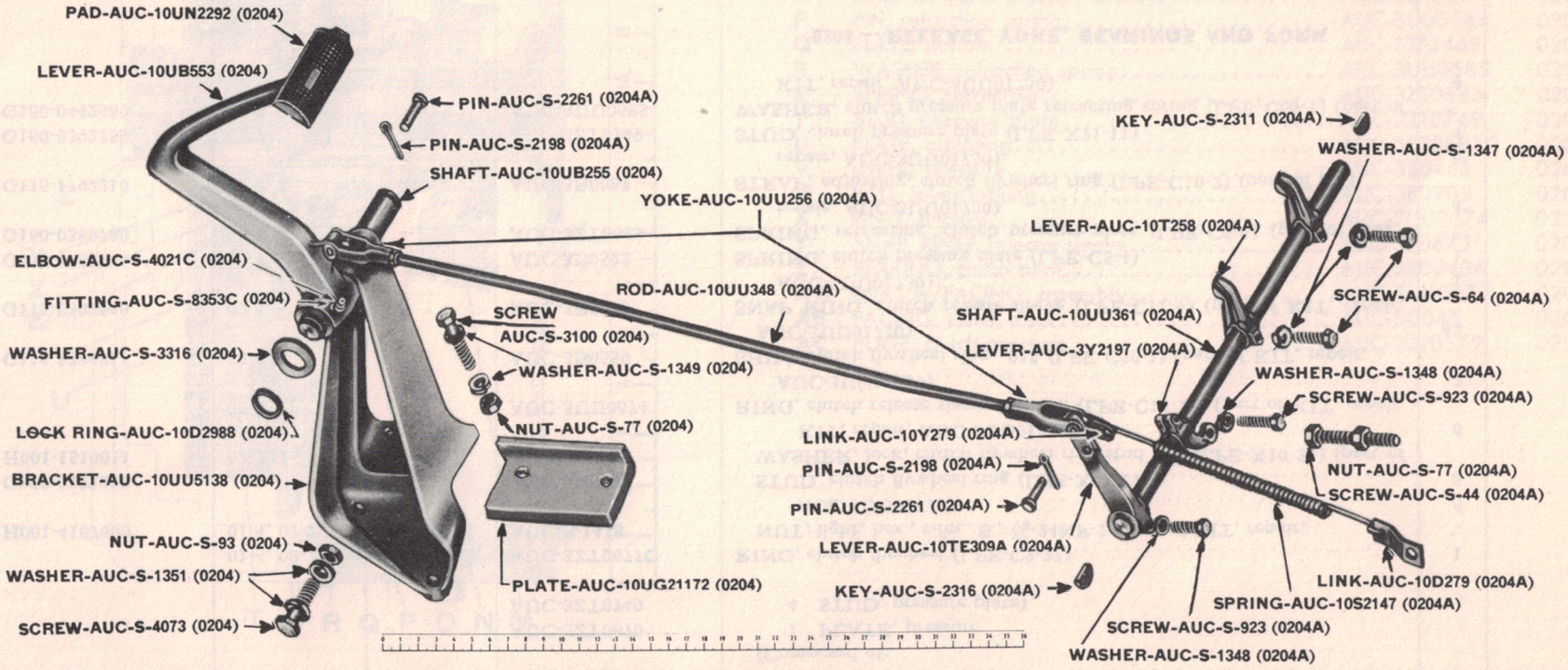

FIGURE 02-4 CLUTCH PEDAL AND LINKAGE RA PD 346176

0204 — PEDAL

		02-4, 15-1		AUC-10UU5138	BRACKET, clutch and brake pedal	1
H-1	H001-0718007	02-4	220080	AUC-S-93	NUT, reg., hex., s-fin., S., 5/8-11NC-2	3
H-1	H001-1013104	02-4	216050	AUC-S-4073	SCREW, cap, hex-hd., S., 5/8-11NC-2 x 1 3/4	3
H-1	H001-1518013	02-4	103325	AUC-S-1351	WASHER, lock, reg., S., 5/8 in.	6
				AUC-10S215	BUSHING, clutch pedal lever (rod end pin)	1
				AUC-10T125	BUSHING, clutch pedal lever (shaft)	1
H-2	H002-0504201	02-4	504201	AUC-S-4021C	ELBOW, lubricating fitting, 45°, 1/8-27NPT, male and female (AD-43716) (clutch pedal lever)	1
H-2	H002-0504208	02-4	504208	AUC-S-8353C	FITTING, lubricating, push type, stght., 1/8-27NPT, male, short (AD-1980) (clutch pedal lever)	1
		02-4		AUC-10UB553	LEVER, clutch pedal	1
				AUC-10UB0882	LEVER, clutch pedal, w/BUSHINGS, assembly (superseded by LEVER, w/BUSHINGS, assembly, AUC-10UU5882) (Composed of:	1
				AUC-10S215	1 BUSHING (rod end pin)	
				AUC-10T125	1 BUSHING (shaft)	
				AUC-10UB553	1 LEVER, clutch pedal)	
				AUC-10UU5882	LEVER, clutch pedal, w/BUSHINGS, assembly (supersedes LEVER, w/BUSHINGS, assembly, AUC-10UB0882) (Composed of:	1
				AUC-10S215	1 BUSHING (rod end pin)	
				AUC-10T125	1 BUSHING (shaft)	
				AUC-S-4021C	1 ELBOW, lubricating fitting, 45°	
				AUC-S-8353C	1 FITTING, lubricating	
				AUC-10UB553	1 LEVER, clutch pedal	
				AUC-S-4745	1 PLUG, pipe)	
		02-4		AUC-10D2988	RING, lock, pedal shaft	1
		02-4		AUC-S-3316	WASHER, plain, S., 1 in. (1 1/32 in. I.D. x 1 3/4 in. O.D. x 3/32 in. thick)	1
		02-4		AUC-10UN2292	PAD, clutch pedal lever	1
H-1	H001-0718001		220064	AUC-S-76	NUT, reg., hex., s-fin., S., 1/4-20NC-2	2
H-1	H001-1023138		113994	AUC-S-1640A	SCREW, machine, fl-hd., S., 1/4-20NC-2 x 1 1/8	2
H-1	H001-1518007		103319	AUC-S-1345	WASHER, lock, reg., S., 1/4 in.	2
		02-4		AUC-10UG21172	PLATE, clamp, clutch and brake pedal bracket	1
H-1	H001-0718005	02-4	220068	AUC-S-77	NUT, reg., hex., s-fin., S., 1/2-13NC-2	2
H-1	H001-1013073	02-4	217056	AUC-S-3100	SCREW, cap, hex-hd., S., 1/2-13NC-2 x 1 3/4	2
H-1	H001-1518011	02-4	103323	AUC-S-1349	WASHER, lock, reg., S., 1/2 in.	4
H-6	H006-0283294			AUC-S-4745	PLUG, pipe, slotted-hd., S., 1/8 in. (clutch pedal lever)	1
		02-4		AUC-10UB255	SHAFT, clutch and brake pedal	1

0204A — PEDAL LINKAGE

		02-4		AUC-10TE309A	LEVER, clutch control shaft	1
H-1	H001-0518035	02-4	113782	AUC-S-2316	KEY, Woodruff, S., 1/4 x 1 (No. 808)	1
H-1	H001-1013055	02-4	213770	AUC-S-923	SCREW, cap, hex-hd., S., 7/16-14NC-2 x 1 1/2	1
H-1	H001-1518010	02-4	103322	AUC-S-1348	WASHER, lock, reg., S., 7/16 in.	1

Note Symbol	Official Stock Number	Figure Number	Part Number		ITEM	Quan. Reqd. per Unit Assy.	Unit Price
			Ordnance	Manufacturer			
Col. 1	Col. 2	Col. 3	Col. 4	Col. 5	Col. 6	Col. 7	Col. 8
					0204A — PEDAL LINKAGE — Continued		
	0600-10T258	02-4		AUC-10T258	LEVER, clutch release trunnion block	2	
H-1	H001-0518023	02-4	103907	AUC-S-2311	KEY, Woodruff, S., 3/16 x 7/8 (No. 607)	2	
H-1	H001-1013033	02-4	213733	AUC-S-64	SCREW, cap, hex-hd., S., 3/8-16NC-2 x 1 1/4	2	
H-1	H001-1518009	02-4	103321	AUC-S-1347	WASHER, lock, reg., S., 3/8 in.	2	
		02-4		AUC-3Y2197	LEVER, stop, clutch control shaft	1	
H-1	H001-0518023	02-4	103907	AUC-S-2311	KEY, Woodruff, S., 3/16 x 7/8 (No. 607)	1	
H-1	H001-1013055	02-4	213770	AUC-S-923	SCREW, cap, hex-hd., S., 7/16-14NC-2 x 1 1/2	1	
H-1	H001-1518010	02-4	103322	AUC-S-1348	WASHER, lock, reg., S., 7/16 in.	1	
		02-4		AUC-10D279	LINK, clutch control shaft lever spring	1	
		02-4		AUC-10Y279	LINK, clutch control shaft lever spring	1	
		02-4		AUC-10UU348	ROD, clutch control	1	
H-1	H001-1013075	02-4	217058	AUC-S-44	SCREW, cap, hex-hd., S., 1/2-13NC-2 x 2 1/4 (clutch control shaft lever stop)	1	
H-1	H001-0718005	02-4	220068	AUC-S-77	NUT, reg., hex., s-fin., S., 1/2-13NC-2	1	
	0600-10UU361	02-4		AUC-10UU361	SHAFT, clutch control	1	
	0600-10S2147	02-4		AUC-10S2147	SPRING, retracting, clutch control shaft	1	
		02-4		AUC-10UU256	YOKE, rod end, adj., 1/2 in. (clutch control rod)	2	
H-1	H001-0718025	02-4	218571	AUC-S-1420	NUT, reg., hex., s-fin., S., 1/2-20NF-2	2	
H-1	H001-0811039	02-4	103373	AUC-S-2198	PIN, cotter, split, S., 3/32 x 3/4	2	
H-1	H001-0823004	02-4	114785	AUC-S-2261	PIN, rod end, 3/8 x 1 1/2	2	
					0205 — PILOT BEARINGS		
H-12	H012-1410030		700940	AUC-3B0243A	BEARING, ball, S.R., radial, 1 seal, wide cup (clutch pilot) (SKF-FLB-30)	1	
					0207 — HOUSING		
	0600-3UN2119B	02-4		AUC-3UN2119B	BUSHING, clutch control shaft	2	
H-2	H002-0504202	02-4	504202	AUC-S-8352C	ELBOW, lubricating, 90°, 1/8-27NPT, male and female (clutch housing)	2	
H-2	H002-0504208	02-4	504208	AUC-S-8353C	FITTING, lubricating, push type, stght., 1/8-27NPT, male, short	2	
		02-4		AUC-3UU5343	HOUSING, clutch	1	
	0600-3UU0580			AUC-3UU0580	HOUSING, clutch, w/BUSHINGS, assembly	1	
					(Composed of:		
				AUC-3UN2119B	2 BUSHING		
				AUC-3UU5343	1 HOUSING		
				AUC-S-82	6 NUT		
				AUC-S-16	2 SCREW, cap		
				AUC-S-1235	6 SCREW, set		
				AUC-S-1346	2 WASHER, lock)		

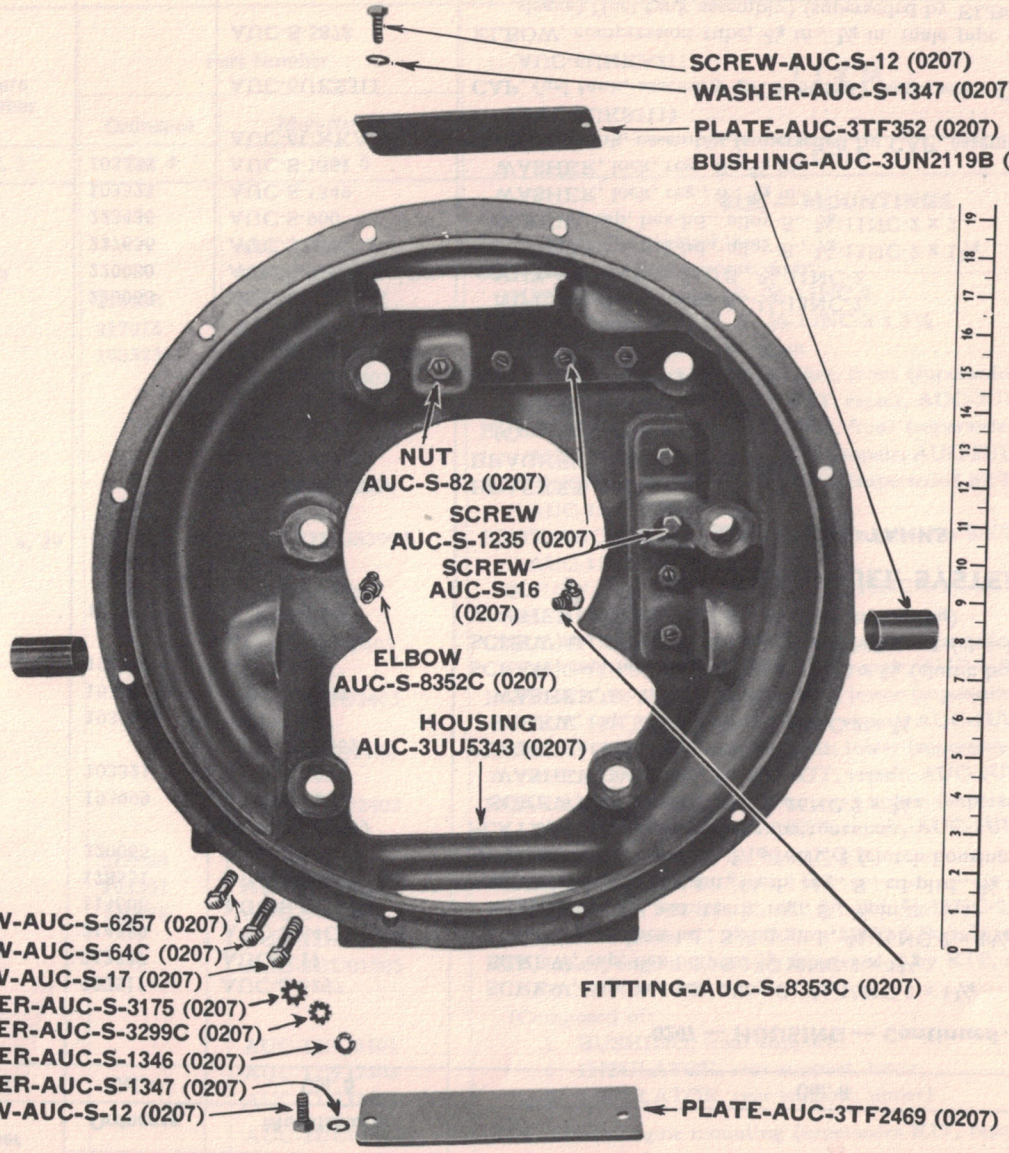

FIGURE 02-5 CLUTCH HOUSING RA PD 346177

Note Symbol	Official Stock Number	Figure Number	Part Number		ITEM	Quan. Reqd. per Unit Assy.	Unit Price
			Ordnance	Manufacturer			
Col. 1	Col. 2	Col. 3	Col. 4	Col. 5	Col. 6	Col. 7	Col. 8
					0207 — HOUSING — Continued		
H-1	H001-0116027	02-5	227517	AUC-S-6257	SCREW, cap, hex-hd., alloy-S., 3/8-16NC-2 x 1 1/4	6	
H-1	H001-1013034	02-5	213737	AUC-S-17	SCREW, cap, hex-hd., S., 3/8-16NC-2 x 1 1/2	2	
H-1	H001-5026751	02-5	214389	AUC-S-64C	SCREW, cap, hex-hd., S., cd-pltd., 3/8-16NC-2 x 1 1/4	2	
H-1	H001-7017680	02-5	114606	AUC-S-3175	WASHER, lock, ext. teeth, reg., S., 3/8 in.	6	
H-1	H001-7124741	02-5	178551	AUC-S-3299C	WASHER, lock, ext-int. teeth, reg., S., cd-pltd., 3/8 in.	2	
H-1	H001-0718002	02-5	220065	AUC-S-82	NUT, reg., hex., s-fin., S., 5/16-18NC-2 (clutch housing)	6	
		02-5		AUC-3TF2469	PLATE, clutch housing cover, bottom	1	
H-1	H001-1013030	02-5	193999	AUC-S-12	SCREW, cap, hex-hd., S., 3/8-16NC-2 x 3/4	2	
H-1	H001-1518009	02-5	103321	AUC-S-1347	WASHER, lock, reg., S., 3/8 in.	2	
		02-5		AUC-3TF352	PLATE, clutch housing cover, top	1	
H-1	H001-1013030	02-5	193999	AUC-S-12	SCREW, cap, hex-hd., S., 3/8-16NC-2 x 3/4	2	
H-1	H001-1518009	02-5	103321	AUC-S-1347	WASHER, lock, reg., S., 3/8 in.	2	
H-1	H001-1013016	02-5	193989	AUC-S-16	SCREW, cap, hex-hd., S., 5/16-17NC-2 x 5/8 (clutch housing)	2	
H-1	H001-1068045	02-5		AUC-S-1235	SCREW, set, hdls., cup-pt., S., 5/16-18NC-2 x 1 (clutch housing)	6	
H-1	H001-1518008	02-5	103320	AUC-S-1346	WASHER, lock, reg., S., 5/16 in. (clutch housing)	2	
					GROUP 03 — FUEL SYSTEM		
					0300 — FUEL TANKS		
		03-1		AUC-6U4593B	BRACKET, fuel tank	2	
				AUC-6U0600B	BRACKET, fuel tank, assembly	2	
					(Composed of:		
				AUC-6U4593B	1 BRACKET		
				AUC-6A2594	1 TAPE, 23 1/2 in. long		
				AUC-S-1015F	5 RIVET)		
H-1	H001-0718005		220068	AUC-S-77	NUT, reg., hex., s-fin., S., 1/2-13NC-2	4	
H-1	H001-0718007	03-1	220080	AUC-S-93	NUT, reg., hex., s-fin., S., 5/8-11NC-2	4	
H-1	H001-0116056		227656	AUC-S-3101	SCREW, cap, hex-hd., alloy-S., 1/2-13NC-2 x 1 3/4	4	
H-1	H001-0116084	03-1	223436	AUC-S-900	SCREW, cap, hex-hd., alloy-S., 5/8-11NC-2 x 2	4	
H-1	H001-1518011	03-1	103323	AUC-S-1349	WASHER, lock, reg., S., 1/2 in.	8	
H-1	H001-1518013	03-1	103325	AUC-S-1351	WASHER, lock, reg., S., 5/8 in.	8	
	G510-0131550			AUC-6URKA211	CAP, fuel tank, assembly (superseded by CAP, assembly, AUC-6UKS311)	1	
	0600-6UKS311	03-1		AUC-6UKS311	CAP, fuel tank, assembly (STN-6685A) (supersedes CAP, assembly, AUC-6URKA211)	1	
				AUC-S-5878	ELBOW, compression tube, 3/8 in., 1/4 in. male pipe end (with nut and sleeve) (fuel tank assembly) (superseded by ELBOW, AUC-25G945)	1	

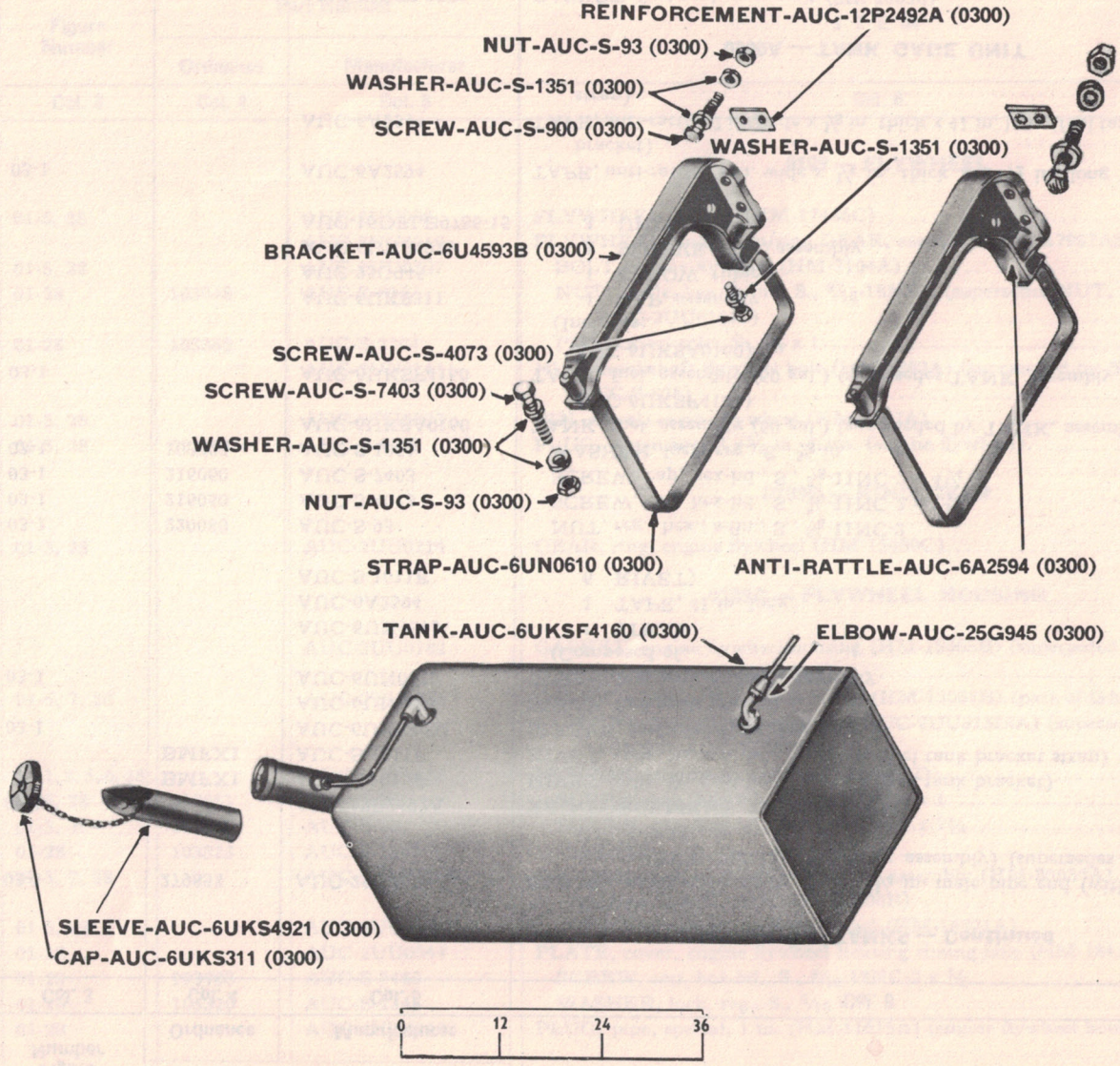

FIGURE 03-1

FUEL TANKS

RA PD 346178

Note Symbol	Official Stock Number	Figure Number	Part Number		ITEM	Quan. Reqd. per Unit Assy.	Unit Price
			Ordnance	Manufacturer			
Col. 1	Col. 2	Col. 3	Col. 4	Col. 5	Col. 6	Col. 7	Col. 8
					0300 — FUEL TANKS — Continued		
	G098-5600210	03-1	279853	AUC-25G945	ELBOW, compression tube, 3/8 in., 1/4 in. male pipe end (with nut and sleeve) (BWE-205102) (fuel tank assembly) (supersedes ELBOW, AUC-S-5878)	1	
		03-1		AUC-12P2492A	REINFORCEMENT, fuel tank bracket	2	
			BMFX1	AUC-S-1015F	RIVET, split, S., oval-hd., 9/64 x 7/8 (fuel tank bracket)	10	
			BMFX1	AUC-S-1011F	RIVET, split, S., oval-hd., 9/64 x 5/8 (fuel tank bracket strap)	12	
		03-1		AUC-6UKS4921	SLEEVE, fuel tank filler, assembly	1	
				AUC-6UN9595	STRAP, fuel tank bracket	2	
		03-1		AUC-6UN0610	STRAP, fuel tank bracket, assembly	2	
					(Composed of:		
				AUC-6UN9595	1 STRAP		
				AUC-6A2594	1 TAPE, 41 in. long		
				AUC-S-1011F	6 RIVET)		
H-1	H001-0718007	03-1	220080	AUC-S-93	NUT, reg., hex., s-fin., S., 5/8-11NC-2	2	
H-1	H001-1013104	03-1	216050	AUC-S-4073	SCREW, cap, hex-hd., S., 5/8-11NC-2 x 1 3/4	2	
H-1	H001-1013114	03-1	216060	AUC-S-7403	SCREW, cap, hex-hd., S., 5/8-11NC-2 x 4 1/4	2	
H-1	H001-1518013	03-1	103325	AUC-S-1351	WASHER, lock, reg., S., 5/8 in.	6	
				AUC-6UKSA0160	TANK, fuel, assembly (60 gal.) (superseded by TANK, assembly, AUC-6UKSF4160)	1	
		03-1		AUC-6UKSF4160	TANK, fuel, assembly (60 gal.) (supersedes TANK, assembly, AUC-6UKSA0160)	1	
					(Includes:		
				AUC-6UKS311	1 CAP, assembly		
				AUC-25G945	1 ELBOW, tubing		
				AUC-6UKS4921	1 SLEEVE, filler, assembly		
				AUC-16DFLB9786-15	1 UNIT, gage)		
		03-1		AUC-6A2594	TAPE, anti-rattle, 2 in. wide x 1/8 in. thick x 23 1/2 in. long (fuel tank bracket)	2	
				AUC-6A2594	TAPE, anti-rattle, 2 in. wide x 1/8 in. thick x 41 in. long (fuel tank bracket strap)	2	
					0300A — TANK GAGE UNIT		
				AUC-16DFL0788	GASKET, fuel tank gage unit (SW-72030)	1	
	G510-7035009			AUC-16DFLB9786-15	UNIT, gage, fuel tank, assembly	1	

		03-2		AUC-6UU0774	ADJUSTMENT, carburetor main jet, assembly (Z-C71-3)	1
		03-2		AUC-6UU0346	AXLE, carburetor float (Z-C120-6) (part of KIT, repair, AUC-6UU0961A)	1
				AUC-6UU0475	BODY, carburetor throttle, assembly (Z-B2-52F-1) (superseded by BODY, assembly, AUC-6UUA0475)	1
				AUC-6UUA0475	BODY, carburetor throttle, assembly (Z-B2-52A-1) (superseded by BODY, assembly, AUC-6UUB0475)	1
		03-2		AUC-6UUB0475	BODY, carburetor throttle, assembly (Z-B2-52A-3) (supersedes BODY, assembly, AUC-6UUA0475)	1
					(Includes:	
				AUC-6UU0218	1 BRACKET	
				AUC-6A01019	2 BUSHING	
				AUC-6A01021	1 PIN, stop	
				AUC-W-4400	2 SCREW, bracket)	
				AUC-6UU0485	BODY, carburetor union (Z-C148-10) (superseded by BODY, AUC-6UUA0485	1
		03-2		AUC-6UUA0485	BODY, carburetor union (Z-C148-9F) (supersedes BODY, AUC-6UU0485)	1
		03-2		AUC-6UU0280	BOWL, fuel, carburetor, assembly (Z-B3-18E)	1
		03-2		AUC-6UU0445	SCREW, carburetor bowl to body (Z-T8S31-16)	4
H-1	H001-1518008	03-2	103320	AUC-S-1346	WASHER, lock, reg., S., 5/16 in. (part of KIT, repair, AUC-6UU0961A)	4
				AUC-6UU0775	BRACKET, carburetor air shutter (Z-CR109-2)	1
	G510-7006387	03-2		AUC-6BL0775	BRACKET, carburetor air shutter, w/wire CLAMP, assembly (Z-C109-2)	1
		03-2		AUC-6UU0218	BRACKET, carburetor float hinge (Z-CR88-2)	1
	G160-0128013	03-2		AUC-6UU0214	BUSHING, carburetor throttle lever (Z-CR26-65)	1
	G510-7007703	03-2		AUC-6A01019	BUSHING, carburetor throttle shaft (Z-CR9-5)	2
	G510-0131592	01-1		AUC-6UU350	CARBURETOR, assembly (Model 457-2) (Z-O-9932)	1
H-1	H001-1013054	03-2	213765	AUC-S-1881	SCREW, cap, hex-hd., S., 7/16-14NC-2 x 1 1/4	2
H-1	H001-1518010	03-2	103322	AUC-S-1348	WASHER, lock, reg., S., 7/16 in.	2
				AUC-6A01025	CLAMP, stop, carburetor floating lever (Z-C25-82x5)	1
		03-2		AUC-6UU0899	CLAMP, wire, carburetor air shutter bracket (Z-C110-1)	1
	G509-0184950	03-2		AUC-6UU0151	FLOAT, carburetor, w/HINGE, assembly (Z-C85-6)	1
		03-2		AUC-6UU0447	GASKET, carburetor bowl to body (Z-C142-28) (part of GASKET SET, AUC-6UU0901)	1
	G067-1501980	03-2		AUC-6BL0838	GASKET, carburetor cap jet and compensating jet (Z-T56-24) (part of GASKET SET, AUC-6UU0901 and KIT, repair, AUC-6UU0961A)	2
		03-2		AUC-6BL0835	GASKET, carburetor channel screw (Z-T56-5) (part of GASKET SET, AUC-6UU0901 and KIT, repair, AUC-6UU0961A)	1
	G067-1501950	03-2		AUC-6UU0836	GASKET, carburetor filter plug (Z-T56-15) (part of GASKET SET, AUC-6UU0901 and KIT, repair, AUC-6UU0961A)	1
	G067-1501960	03-2		AUC-6BL0837	GASKET, carburetor fuel valve (Z-T56-23) (part of GASKET SET, AUC-6UU0901 and KIT, repair, AUC-6UU0961A)	1
	G160-0443037	03-2		AUC-6UU0834	GASKET, carburetor main discharge tube (Z-T56-2) (part of GASKET SET, AUC-6UU0901 and KIT, repair, AUC-6UU0961A)	1

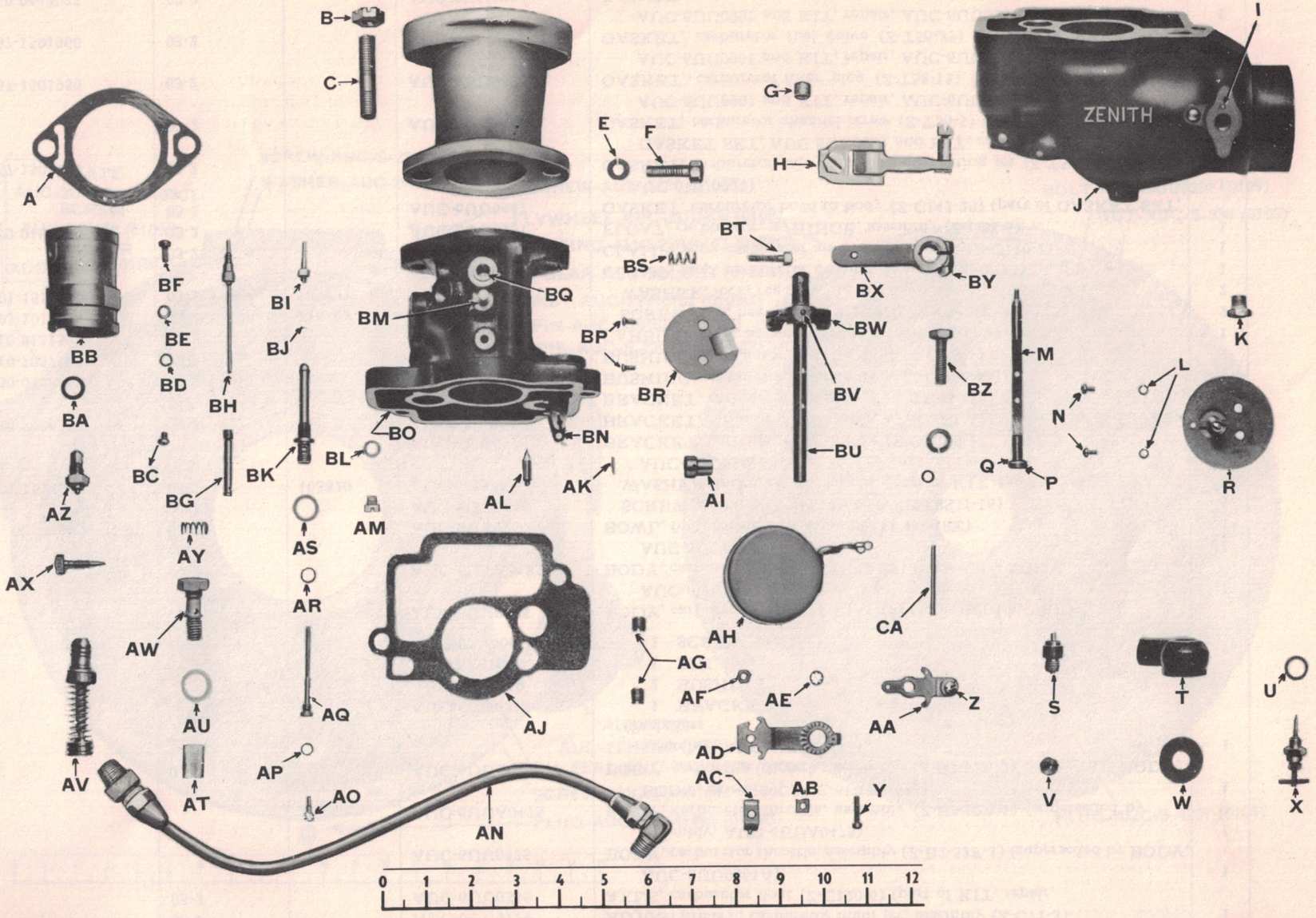

FIGURE 03-2 CARBURETOR RA PD 346179

FIGURE 03-2 CARBURETOR RA PD 346179A

KEY	ITEM	PART NO.	GROUP
A	GASKET, carburetor	AUC-6N2375B	0301A
B	NUT	AUC-S-431	0301A
C	STUD, carburetor adapter	AUC-6UU2327	0301A
D	ADAPTER, carburetor	AUC-6UU3309A	0301A
E	WASHER, carburetor bowl to body screw	AUC-S-1346	0301
F	SCREW, carburetor bowl to body	AUC-6UU0445	0301
G	PACKING, carburetor throttle shaft	AUC-6UU0892	0301
H	SHAFT, carburetor throttle, assembly	AUC-6UUA0895	0301
I	PIN, locating, carburetor bracket	AUC-6A01018	0301
J	BOWL, fuel, carburetor, assembly	AUC-6UU0280	0301
K	SCREW, carburetor bracket	AUC-6UUA0117	0301
L	WASHER, carburetor air shutter retaining screw	AUC-S-1343	0301
M	SHAFT, carburetor air shutter	AUC-6UU0167	0301
N	SCREW, air shutter retaining	AUC-6BL0117	0301
O	WASHER, lock	AUC-S-1348	0301
P	PIN, air shutter shaft thrust washer	AUC-6UU0947	0301
Q	WASHER, thrust, air shutter shaft	AUC-6BL0777	0301
R	PLATE, carburetor air shutter, assembly	AUC-6UU0893	0301
S	VALVE, carburetor power jet, assembly	AUC-6UU0781	0301
T	BODY, carburetor union	AUC-6UUA0485	0301
U	GASKET, carburetor fuel valve	AUC-6BL0837	0301
V	VALVE, check, carburetor, assembly	AUC-6UU0553	0301
W	GASKET, carburetor union body	AUC-6BL0843	0301
X	ADJUSTMENT, carburetor main jet, assembly	AUC-6UU0774	0301
Y	SCREW, air shutter bracket wire clamp	AUC-6UU0250	0301
Z	SCREW, air shutter lever swivel	AUC-6UU0894	0301
AA	LEVER, air shutter, assembly	AUC-6UU0168	0301
AB	NUT, air shutter bracket clamp screw	AUC-6UU0891	0301
AC	CLAMP, wire, air shutter bracket	AUC-6UU0899	0301
AD	BRACKET, air shutter, assembly	AUC-6BL0775	0301
AE	WASHER, air shutter shaft nut	AUC-S-3152	0301
AF	NUT, air shutter shaft	AUC-6UU0554	0301
AG	PLUG, bowl drain and governor by-pass	AUC-6UG0757	0301
AH	FLOAT, assembly	AUC-6UU0151	0301
AI	BUSHING, throttle lever	AUC-6UU0214	0301
AJ	GASKET, bowl to body	AUC-6UU0447	0301
AK	PIN, air shutter shaft thrust washer	AUC-6UUB0947	0301
AL	SCREW, float hinge bracket	AUC-W-4400	0301
AM	SCREW, carburetor channel	AUC-6UU0782	0301

FIGURE 03-2 CARBURETOR RA PD 346179B

KEY	ITEM	PART NO.	GROUP
AN	TUBE, carburetor by-pass, assembly	AUC-6UUA3913	0301
AO	JET, main	AUC-6UU0449	0301
AP	GASKET, main jet	AUC-6UU0844	0301
AQ	JET, power and accelerating, assembly	AUC-6BLO783	0301
AR	GASKET, power and accelerating jet	AUC-6BL0844	0301
AS	GASKET, main discharge tube	AUC-6UU0834	0301
AT	SCREEN, filter	AUC-6UU0156	0301
AU	GASKET, filter plug	AUC-6UU0836	0301
AV	PUMP, vacuum, assembly	AUC-6UU0550	0301
AW	PLUG, filter	AUC-6UUA0336	0301
AX	SCREW, idle adjusting	AUC-6UU0142	0301
AY	SPRING, idle adjusting screw	AUC-6UU0896	0301
AZ	VALVE, fuel, assembly	AUC-6UU0434	0301
BA	GASKET, fuel valve	AUC-6BL0837	0301
BB	VENTURI	AUC-6UU0118	0301
BC	JET, compensating	AUC-6BL0784	0301
BD	GASKET, cap jet and compensating jet	AUC-6BL0838	0301
BE	WASHER, lock (venturi screw)	AUC-S-1344	0301
BF	SCREW, venturi	AUC-6UU0159	0301
BG	WELL, progressive	AUC-6UU0128	0301
BH	JET, idling	AUC-6BL0164	0301
BI	JET, cap, assembly	AUC-6UU0785	0301
BJ	GASKET, cap jet and compensating jet	AUC-6BL0838	0301
BK	TUBE, main discharge	AUC-6UU0343	0301
BL	GASKET, channel screw	AUC-6BL0835	0301
BM	PIN, throttle lever stop	AUC-6A01021	0301
BN	BRACKET, float hinge	AUC-6UU0218	0301
BO	BODY, throttle assembly	AUC-6UUB0475	0301
BP	SCREW, throttle plate	AUC-6UU0374	0301
BQ	BUSHING, throttle shaft	AUC-6A01019	0301
BR	PLATE, carburetor throttle	AUC-6UU0116	0301
BS	SPRING, throttle stop screw	AUC-6UU0442	0301
BT	SCREW, throttle stop	AUC-6UU0358	0301
BU	SHAFT, throttle	AUC-6UUA0131	0301
BV	PIN, throttle stop lever	AUC-6UU0947	0301
BW	LEVER, throttle stop	AUC-6UU0190	0301
BX	LEVER, throttle	AUC-6UUA0180	0301
BY	SCREW, throttle lever clamp	AUC-6BL0207	0301
BZ	SCREW, cap	AUC-S-1881	0301
CA	AXLE, carburetor float	AUC-6UU0346	0301

Note Symbol	Official Stock Number	Figure Number	Part Number		ITEM	Quan. Reqd. per Unit Assy.	Unit Price
			Ordnance	Manufacturer			
Col. 1	Col. 2	Col. 3	Col. 4	Col. 5	Col. 6	Col. 7	Col. 8
					0301—CARBURETOR—Continued		
	G160-0443048	03-2		AUC-6UU0844	GASKET, carburetor main jet (Z-T56-27) (part of GASKET SET, AUC-6UU0901 and KIT, repair, AUC-6UU0961A)	1	
	G160-0443045			AUC-6UUA0844	GASKET, carburetor main jet adjusting (Z-T56-13) (part of GASKET SET, AUC-6UU0901 and KIT, repair, AUC-6UU0961A)	1	
	G147-0443006	03-2		AUC-6BL0844	GASKET, carburetor power and accelerating jet (Z-T56-48) (part of GASKET SET, AUC-6UU0901 and KIT, repair, AUC-6UU0961A)	1	
	G067-1501990	03-2		AUC-6BL0843	GASKET, carburetor union body (Z-T56-36) (part of GASKET SET, AUC-6UU0901 and KIT, repair, AUC-6UU0961A)	1	
	9960-C181-114			AUC-6UU0901	GASKET SET, carburetor (Z-C181-114) (part of KIT, repair, AUC-6UU0961A)	1	
					(Composed of:		
				AUC-6UU0447	1 GASKET, bowl		
				AUC-6UG0857	1 GASKET, carburetor		
				AUC-6BL0835	1 GASKET, channel screw		
				AUC-6BL0838	2 GASKET, compensator and cap jets		
				AUC-6UU0834	1 GASKET, discharge tube		
				AUC-6UU0836	1 GASKET, filter plug		
				AUC-6BL0837	2 GASKET, jet adjustment		
				AUC-6UU0844	1 GASKET, main jet		
				AUC-6UUA0844	1 GASKET, main jet adjusting		
				AUC-6BL0844	1 GASKET, power jet		
				AUC-6BL0843	1 GASKET, union body)		
		03-2		AUC-6UU0785	JET, cap, carburetor, assembly, No. 38 (Z-C57-1x1-38)	1	
	G510-7006387	03-2		AUC-6BL0784	JET, compensating, carburetor, No. 32 (Z-C52-3-32)	1	
	G510-7006371	03-2		AUC-6BL0164	JET, idling, carburetor, assembly, No. 16 (Z-C54-1-16) (part of KIT, repair, AUC-6UU0961A)	1	
	G510-7006381	03-2		AUC-6UU0449	JET, main, carburetor, No. 32 (Z-C52-4-32)	1	
		03-2		AUC-6BL0783	JET, power and accelerating, carburetor, assembly, No. 25 (Z-C51-3-25)	1	
				AUC-6UU0961	KIT, repair, carburetor (Z-QMC-23) (superseded by KIT, repair, AUC-6UU0961A)	1	
					(Composed of:		
				AUC-6UU0774	1 ADJUSTMENT, main jet		
				AUC-6UU0346	1 AXLE, float		
				AUC-6UU0151	1 FLOAT, assembly		
				AUC-6UUA0844	1 GASKET, adjusting, main jet		
				AUC-6UU0447	1 GASKET, bowl		
				AUC-6N2375A	1 GASKET, carburetor		
				AUC-6BL0835	1 GASKET, channel screw		

Note Symbol	Official Stock Number	Figure Number	Part Number: Ordnance	Part Number: Manufacturer	ITEM	Quan. Reqd. per Unit Assy.	Unit Price
Col. 1	Col. 2	Col. 3	Col. 4	Col. 5	Col. 6	Col. 7	Col. 8
					0301 — CARBURETOR — Continued		
				AUC-6BL0838	2 GASKET, compensator and cap jets		
				AUC-6UU0834	1 GASKET, discharge tube		
				AUC-6UU0836	1 GASKET, filter plug		
				AUC-6UU0844	1 GASKET, main jet		
				AUC-6BL0844	1 GASKET, power jet		
				AUC-6BL0843	1 GASKET, union body		
				AUC-6UU0892	2 PACKING, throttle shaft		
				AUC-S-4747	1 PLUG, intake drain		
				AUC-6UU0550	1 PUMP, vacuum, w/PISTON, assembly		
				AUC-6A01022	1 RING, packing		
				AUC-6UU0156	1 SCREEN, filter		
				AUC-6UU0117	2 SCREW, air shutter		
				AUC-6UU0445	1 SCREW, bowl to body		
				AUC-6UU0142	1 SCREW, idle adjusting		
				AUC-6UU0374	3 SCREW, throttle plate		
				AUC-6UU0358	1 SCREW, throttle stop		
				AUC-6UUA0895	1 SHAFT, throttle, w/LEVER, assembly		
				AUC-6UU0896	1 SPRING, idle adjusting screw		
				AUC-6UU0442	1 SPRING, throttle stop screw		
				AUC-6UU0434	1 VALVE, fuel, w/SEAT, assembly		
				AUC-6UU0781	1 VALVE, power jet)		
	9960-QMC-23A			AUC-6UU0961A	KIT, repair, carburetor (Z-QMC-23A) (supersedes KIT, repair, AUC-6UU0961)	1	
					(Composed of:		
				AUC-6UU0346	1 AXLE, float		
				AUC-6UU0901	1 GASKET SET		
				AUC-6BL0164	1 JET, idling		
				AUC-6UU0554	1 NUT, air shutter shaft		
				AUC-6UU0892	2 PACKING, throttle shaft		
				AUC-6UU0162	1 PIN, taper, bushing		
				AUC-6UUB0947	1 PIN, taper, thrust washer		
				AUC-6UU0550	1 PUMP, vacuum, w/PISTON, assembly		
				AUC-6A01022	1 RING, retaining		
				AUC-6UU0156	1 SCREEN, filter		
				AUC-6UU0117	2 SCREW, air shutter		
				AUC-6UU0374	3 SCREW, throttle plate		
				AUC-6UU0159	1 SCREW, venturi		
				AUC-6UU0553	1 VALVE, check, assembly		

				AUC-6UU0434	1 VALVE, fuel, assembly	
				AUC-6UU0781	1 VALVE, power jet	
				AUC-S-1343	2 WASHER, lock	
				AUC-S-1344	1 WASHER, lock	
				AUC-S-1346	4 WASHER, lock	
				AUC-S-3152	1 WASHER, lock)	
				AUC-6UUA0168	LEVER, carburetor air shutter (Z-CR106-3)	1
	G067-1500784	03-2		AUC-6UU0168	LEVER, carburetor air shutter, w/SWIVEL, assembly (Z-C106-2)	1
	G509-0274414			AUC-6A01023	LEVER, carburetor floating, w/SWIVEL, assembly (Z-C24-101Ax5)	1
				AUC-6UU0180	LEVER, carburetor throttle (Z-C24-10Gx8) (superseded by LEVER, AUC-6UUA0180)	1
	G067-1500800	03-2		AUC-6UUA0180	LEVER, carburetor throttle (Z-C24-10x8) (superseded by LEVER, AUC-6UUB0180)	1
				AUC-6UUB0180	LEVER, carburetor throttle (Z-C24-10BBx8) (supersedes LEVER, AUC-6UUA0180)	1
		03-2		AUC-6UU0190	LEVER, carburetor throttle stop (Z-CR28-33x5)	1
	G121-0314588	03-2		AUC-6UU0891	NUT, carburetor air shutter bracket wire clamp screw (Z-T21S8)	1
		03-2		AUC-6UU0554	NUT, carburetor air shutter shaft (Z-T22S8) (part of KIT, repair, AUC-6UU0961A)	1
	G067-1501940	03-2		AUC-6UU0892	PACKING, carburetor throttle shaft (Z-CT57-2) (part of KIT, repair, AUC-6UU0961A)	2
	G067-1501025	03-2		AUC-6A01021	PIN, carburetor throttle lever stop (Z-CR121-10)	1
	1780-929570	03-2		AUC-6A01018	PIN, locating, carburetor bracket (Z-C120-9) (fuel bowl assembly)	1
	G125-0338913			AUC-6UUA0947	PIN, taper, carburetor air shutter shaft thrust washer (Z-CT63-2) (superseded by PIN, AUC-6UUB0947)	1
	G136-0336143	03-2		AUC-6UUB0947	PIN, taper, carburetor air shutter shaft thrust washer (Z-CT63-9) (part of KIT, repair, AUC-6UU0961A) (supersedes PIN, AUC-6UUA0947)	1
	G160-0338734			AUC-6UU0162	PIN, taper, carburetor throttle bushing (Z-CT63-4) (part of KIT, repair, AUC-6UU0961A)	1
	G160-0338733	03-2		AUC-6UU0947	PIN, taper, carburetor throttle stop lever (Z-CT63-5)	1
		03-2		AUC-6UU0893	PLATE, carburetor air shutter, assembly (Z-C101-19)	1
	9960-C21-105	03-2		AUC-6UU0116	PLATE, carburetor throttle (Z-C21-105)	1
				AUC-6UU0336	PLUG, carburetor filter (Z-C149-22) (superseded by PLUG, AUC-6UUA0336)	1
		03-2		AUC-6UUA0336	PLUG, carburetor filter (Z-C149-24) (supersedes PLUG, AUC-6UU0336)	1
	G671-7002208	03-2		AUC-6UG0757	PLUG, pipe, carburetor bowl drain (Z-CT91-3)	1
	G671-7002208	03-2		AUC-6UG0757	PLUG, pipe, governor by-pass (Z-CT91-3)	1
		03-2		AUC-6UU0550	PUMP, carburetor vacuum, w/PISTON, assembly (Z-C36-12) (part of KIT, repair, AUC-6UU0961A)	1
				AUC-6A01022	RING, retaining, carburetor throttle shaft packing (Z-C130-16) (part of KIT, repair, AUC-6UU0961A)	1
		03-2		AUC-6UU0156	SCREEN, carburetor filter (Z-C150-1) (part of KIT, repair, AUC-6UU0961A)	1
H-1	H001-1026425	03-2		AUC-6UU0250	SCREW, carburetor air shutter bracket wire clamp (Z-T1S8-10)	1

Note Symbol	Official Stock Number	Figure Number	Part Number		ITEM	Quan. Reqd. per Unit Assy.	Unit Price
			Ordnance	Manufacturer			
Col. 1	Col. 2	Col. 3	Col. 4	Col. 5	Col. 6	Col. 7	Col. 8
					0301 — CARBURETOR — Continued		
	G671-7002214	03-2		AUC-6UU0894	SCREW, carburetor air shutter lever swivel (Z-T1S8-6)	1	
		03-2		AUC-6BL0117	SCREW, carburetor air shutter retaining (Z-T11S6-4) (superseded by SCREW, AUC-6UU0117)	2	
H-1	H001-1024053			AUC-6UU0117	SCREW, carburetor air shutter retaining (Z-T15B6-4) (supersedes SCREW, AUC-6BL0117) (part of KIT, repair, AUC-6UU0961A)	2	
		03-2		AUC-6UUA0117	SCREW, carburetor bracket (Z-C140-2)	1	
	G067-1501350	03-2		AUC-6UU0782	SCREW, carburetor channel (Z-C138-61)	1	
	G067-1501400	03-2		AUC-W-4400	SCREW, carburetor float hinge bracket (Z-T73-15)	2	
	G509-0382195			AUC-6UUA0362	SCREW, carburetor floating lever stop clamp (Z-T8S25-10)	1	
	G067-1500930	03-2		AUC-6UU0142	SCREW, carburetor idle adjusting (Z-C46-6)	1	
	G509-0382346	03-2		AUC-6BL0207	SCREW, carburetor throttle lever clamp (Z-T8S10-9)	1	
	G067-1501380			AUC-6UU0207	SCREW, carburetor throttle lever swivel (Z-T8S8-7)	1	
		03-2		AUC-6UU0374	SCREW, carburetor throttle plate (Z-C136-12) (part of KIT, repair, AUC-6UU0961A)	3	
	G067-1501430	03-2		AUC-6UU0358	SCREW, carburetor throttle stop (Z-T8S10-15)	1	
				AUC-6BL0778	SCREW, carburetor vacuum (Z-T10-3)	1	
	G147-0383130	03-2		AUC-6UU0159	SCREW, carburetor venturi (Z-T1S10-6) (part of KIT, repair, AUC-6UU0961A)	1	
		03-2		AUC-6UU0167	SHAFT, carburetor air shutter (Z-C105-130)	1	
				AUC-6UU0131	SHAFT, carburetor throttle (Z-C23-26) (superseded by SHAFT, AUC-6UUA0131)	1	
		03-2		AUC-6UUA0131	SHAFT, carburetor throttle (Z-C23-314) (supersedes SHAFT, AUC-6UU0131)	1	
				AUC-6UU0895	SHAFT, carburetor throttle, w/LEVER, assembly (Z-C29-329) (superseded by SHAFT, w/LEVER, assembly, AUC-6UUA0895)	1	
				AUC-6UUA0895	SHAFT, carburetor throttle, w/LEVER, assembly (Z-C29-395) (supersedes SHAFT, w/LEVER, assembly, AUC-6UU0895)	1	
					(Composed of:		
				AUC-6UU0190	1 LEVER		
				AUC-6UU0892	2 PACKING		
				AUC-6UU0947	1 PIN, taper		
				AUC-6A01022	1 RING, retaining		
				AUC-6UU0358	1 SCREW, stop		
				AUC-6UUA0131	1 SHAFT		
				AUC-6UU0442	1 SPRING, stop screw)		
	G067-1501650	03-2		AUC-6UU0896	SPRING, carburetor idle adjusting screw (Z-C111-17)	1	
	G067-1501670	03-2		AUC-6UU0442	SPRING, carburetor throttle stop screw (Z-C111-62)	1	
				AUC-6UU0897	SWIVEL, carburetor air shutter lever (Z-CR134-1)	1	

				AUC-6UU4913	TUBE, carburetor by-pass, assembly (superseded by TUBE, assembly, AUC-6UU4913A)	1
				AUC-6UU4913A	TUBE, carburetor by-pass, assembly (superseded by TUBE, w/FITTINGS, assembly, AUC-6UUA3913)	1
		03-2		AUC-6UUA3913	TUBE, carburetor by-pass, w/FITTINGS, assembly (supersedes TUBE, assembly, AUC-6UU4913A)	1
		03-2		AUC-6UU0343	TUBE, carburetor main discharge (Z-C66-41)	1
	G510-7006350	03-2		AUC-6UU0781	VALVE, carburetor power jet, assembly, No. 13 (Z-C97-10-13) (part of KIT, repair, AUC-6UU0961A)	1
	G067-1501850	03-2		AUC-6UU0553	VALVE, check, carburetor, assembly (Z-C41-9) (part of KIT, repair, AUC-6UU0961A)	1
		03-2		AUC-6UU0434	VALVE, fuel, carburetor, w/SEAT, assembly, No. 55 (Z-C81-3-55) (part of KIT, repair, AUC-6UU0961A)	1
	G513-7007765	03-2		AUC-6UU0118	VENTURI, carburetor, No. 33 (Z-C38-17-33)	1
	G509-0443283			AUC-6UU0776	WASHER, carburetor air shutter lever swivel (Z-CT52-1)	1
H-1	H001-1519006	03-2	115544	AUC-S-3152	WASHER, lock, int. teeth, reg., S., No. 8 (Z-T45-8) (carburetor air shutter shaft nut) (part of KIT, repair, AUC-6UU0961A)	1
H-1	H001-1518003	03-2	106495	AUC-S-1343	WASHER, lock, reg., S., No. 6 (Z-T43-6) (carburetor air shutter retaining screw) (part of KIT, repair, AUC-6UU0961A)	2
H-1	H001-1518006	03-2	106498	AUC-S-1344	WASHER, lock, reg., S., No. 12 (Z-T41-10) (carburetor venturi screw) (part of KIT, repair, AUC-6UU0961A)	1
		03-2		AUC-6BL0777	WASHER, thrust, carburetor air shutter shaft (Z-C130-4)	1
		03-2		AUC-6UU0128	WELL, progressive, carburetor (Z-C76-21)	1
					0301A — CARBURETOR MOUNTING PARTS	
	0600-6UU3309A	03-2		AUC-6UU3309A	ADAPTER, carburetor	1
H-1	H001-0718004	03-2	220067	AUC-S-431	NUT, hex., reg., s-fin., S., 7/16-14NC-2	2
		03-2		AUC-6UU2327	STUD, carburetor adapter	2
H-1	H001-1518010		103322	AUC-S-1348	WASHER, lock, reg., S., 7/16 in.	2
	0600-6N2375A			AUC-6N2375A	GASKET, carburetor (superseded by GASKET, AUC-6N2375B)	2
	0600-6N2375B	01-7, 03-2		AUC-6N2375B	GASKET, carburetor (part of GASKET SETS, AUC-2UU01200B, AUC-2UU01390A, AUC-2UU01504A and KIT, repair, AUC-2UU01506) (supersedes GASKET, AUC-6N2375A) (interchangeable with GASKET, AUC-6UG0857)	2
	G172-0194024			AUC-6UG0857	GASKET, carburetor (Z-C141-4-7) (part of GASKET SET, AUC-6UU0901) (interchangeable with GASKET, AUC-6N2375B)	2
					0301B — CHOKE (AUTOMATIC) AND/OR CHOKE CONTROL	
		03-5		AUC-10UVA2336	BRACKET, choke and throttle control, front	1
		03-5		AUC-10UVB2336	BRACKET, choke and throttle control, rear	1
		03-5		AUC-10UV2336	BRACKET, choke and throttle control, top	1
H-1	H001-0718002	03-5	220065	AUC-S-82	NUT, reg., hex., s-fin., S., 5/16-18NC-2	1
H-1	H001-1013018	03-5	216959	AUC-S-15	SCREW, cap, hex-hd., S., 5/16-18NC-2 x 7/8	1
H-1	H001-1518008	03-5	103320	AUC-S-1346	WASHER, lock, reg., S., 5/16 in.	1
		03-5		AUC-10A2989	CLIP, choke and throttle control	3
H-1	H001-0718001	03-5	220064	AUC-S-76	NUT, reg., hex., s-fin., S., 1/4-20NC-2	3
H-1	H001-1030136	03-5	113957	AUC-S-1614A	SCREW, machine, rd-hd., S., 1/4-20NC-2 x 3/4	3
H-1	H001-1518007	03-5	103319	AUC-S-1345	WASHER, lock, reg., S., 1/4 in.	3

Note Symbol	Official Stock Number	Figure Number	Part Number		ITEM	Quan. Reqd. per Unit Assy.	Unit Price
			Ordnance	Manufacturer			
Col. 1	Col. 2	Col. 3	Col. 4	Col. 5	Col. 6	Col. 7	Col. 8
					0301B — CHOKE (AUTOMATIC) AND/OR CHOKE CONTROL — Continued		
				AUC-10UKS3750	WIRE, choke control, assembly	1	
H-1	H001-4167600		103026	AUC-S-1418	NUT, light, hex., s-fin., S., 3/8-24NF-2	1	
H-1	H001-1517009		110730	AUC-S-3159	WASHER, lock, lgt., S., 3/8 in. (.390 I.D. x .640 O.D. x 1/16 thick)	1	
		03-5		AUC-10ZUKS3750	WIRE, choke control, assembly (for service only)	1	
H-1	H001-4167600		103026	AUC-S-1418	NUT, light, hex., s-fin., S., 3/8-24NF-2	1	
H-1	H001-1517009		110730	AUC-S-3159	WASHER, lock, lgt., S., 3/8 in. (.390 I.D. x .640 O.D. x 1/16 thick)	1	

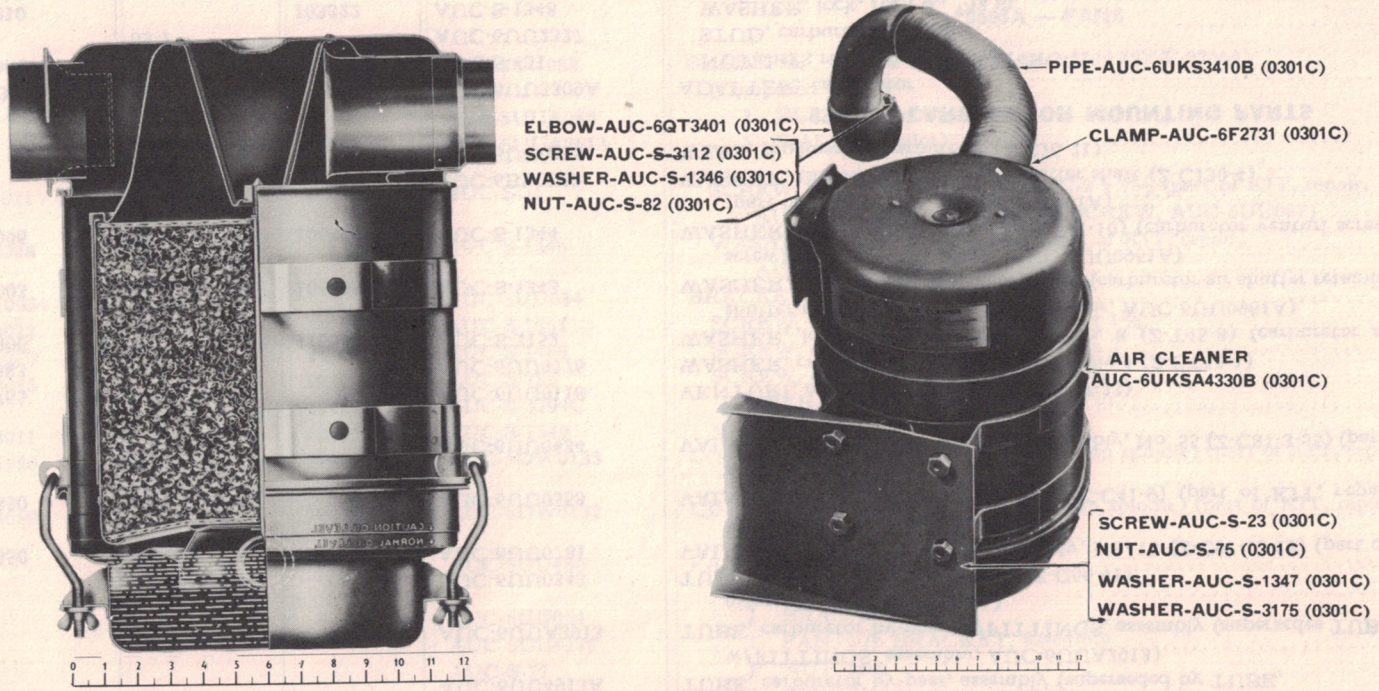

FIGURE 03-3 CARBURETOR AIR CLEANER RA PD 346180

0301C — AIR CLEANER

	8940-H90-11260			AUC-6UKS4330	AIR CLEANER, carburetor, assembly, 7 15/16 in. diam., oil bath type (UTS-H90-11260) (closed cab only)	1
	G671-7007053	03-3		AUC-6UKSA4330B	AIR CLEANER, carburetor, assembly, 9½ in. diam., oil bath type (UTS-T195-12001) (open cab only)	1
H-1	H001-0718003	03-3	220066	AUC-S-75	NUT, reg., hex., s-fin., S., ⅜-16NC-2	4
H-1	H001-1013032	03-3	213729	AUC-S-23	SCREW, cap, hex-hd., S., ⅜-16NC-2 x 1	4
H-1	H001-7017680	03-3	114606	AUC-S-3175	WASHER, lock, ext. teeth, reg., S., ⅜ in.	4
H-1	H001-1518009	03-3	103321	AUC-S-1347	WASHER, lock, reg., S., ⅜ in.	4
				AUC-6UKSB3686B	BRACKET, mounting, air cleaner (open cab only)	1
				AUC-6UKS4686	BRACKET, mounting, air cleaner, w/PIPE, assembly (closed cab only) (superseded by BRACKET, w/PIPE, assembly, AUC-6UKSA4686)	1
				AUC-6UKSA4686	BRACKET, mounting, air cleaner, w/PIPE, assembly (closed cab only) (supersedes BRACKET, w/PIPE, assembly, AUC-6UKS4686)	1
	0600-6F2731	03-3		AUC-6F2731	CLAMP, carburetor intake pipe (open cab only)	1
H-1	H001-0718001		220064	AUC-S-76	NUT, reg., hex., s-fin., S., ¼-20NC-2	2
H-1	H001-1030140		113961	AUC-S-1610A	SCREW, machine, rd-hd., S., ¼-20NC-2 x 1¼	2
H-1	H001-1518007		103319	AUC-S-1345	WASHER, lock, reg., S., ¼ in.	4
		01-1, 03-3		AUC-6QT3401	ELBOW, carburetor intake	1
H-1	H001-0718002	03-3	220065	AUC-S-82	NUT, reg., hex., s-fin., S., 5/16-18NC-2	2
H-1	H001-1013025	03-3	217004	AUC-S-3112	SCREW, cap, hex-hd., S., 5/16-18NC-2 x 2½	2
H-1	H001-1518008	03-3	103320	AUC-S-1346	WASHER, lock, reg., S., 5/16 in.	4
	8941-A-12004			AUC-6UU0304	GASKET, air cleaner cup (UTS-A-12004)	1
				AUC-6UKSA344	PIPE, carburetor air intake, lower (closed cab only)	1
		03-3		AUC-6UKS3410B	PIPE, flexible, carburetor air intake, assembly (open cab only)	1
				AUC-6UU21016	RING, sealing, carburetor elbow (outlet side)	1
				AUC-6UKS3410B	TUBING, flexible, carburetor air intake, assembly	1

0302 — FUEL PUMP

	G509-0110476	03-4		AUC-A-1473	ARM, rocker, fuel pump (AC-1537397)	1
	G067-1500166			AUC-6UU0695	BAIL, fuel pump, w/SCREW, assembly (AC-854016)	1
	G121-0124205			AUC-A-1474	BODY, fuel pump (AC-1537259)	1
	G121-0124525	03-4		AUC-6UU0694	BOWL, metal, fuel pump (AC-1537710)	1
	G121-0131430			AUC-A-1006	CAP, fuel pump spring (AC-855532) (part of KIT, repair, AUC-6UU0991A)	2
	G121-0137956			AUC-A-1007	CLIP, fuel pump link pin (AC-855017) (part of KIT, repair, AUC-6UU0991A)	4
	G121-0140020			AUC-A-1475	COVER, fuel pump, bottom (AC-855573)	1
	G121-0140045			AUC-A-1476	COVER, fuel pump, top, w/valve SEAT, assembly (AC-855739)	1
	G085-1100660	03-4		AUC-6UU01015	DIAPHRAGM, fuel pump, assembly (5 pieces) (AC-855389) (part of KIT, repair, AUC-6UU0991A)	2
	G121-0155500	03-4		AUC-A-1477	DOME, air, fuel pump (AC-855918)	1
	G121-0193756			AUC-A-1008	GASKET, fuel pump bottom cover (AC-855585) (part of KIT, repair, AUC-6UU0991A)	1

Note Symbol	Official Stock Number	Figure Number	Part Number		ITEM	Quan. Reqd. per Unit Assy.	Unit Price
			Ordnance	Manufacturer			
Col. 1	Col. 2	Col. 3	Col. 4	Col. 5	Col. 6	Col. 7	Col. 8
					0302 — FUEL PUMP — Continued		
	G103-1594063	01-7		AUC-6UU0846	GASKET, fuel pump bowl (AC-854003) (part of KIT, repair, AUC-6UU0991A)	1	
	G121-0442934			AUC-A-1009	GASKET, fuel pump pull rod (AC-855012) (part of KIT, repair, AUC-6UU0991A)	1	

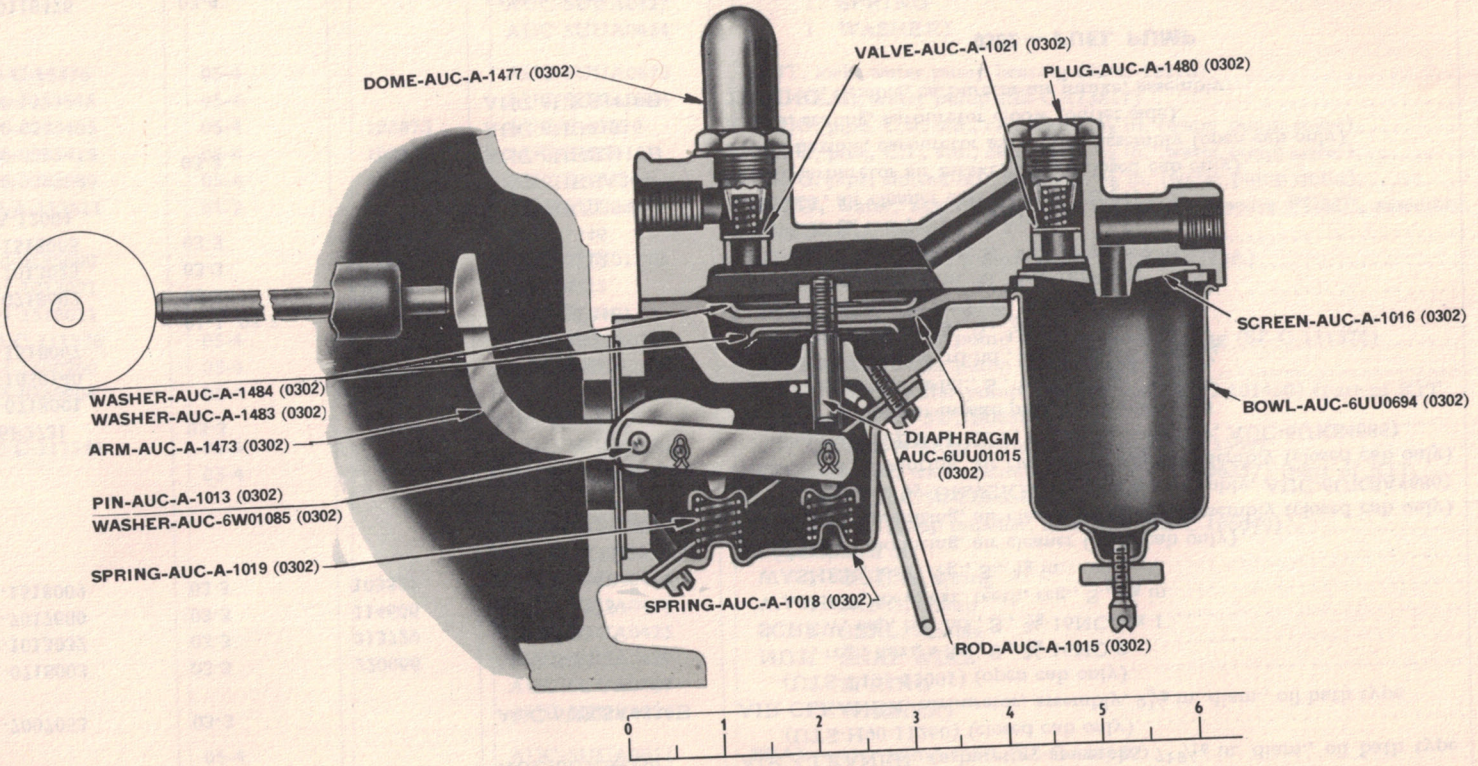

FUEL PUMP

RA PD 346181

FIGURE 03-4

	G085-1100886			AUC-A-1010	GASKET, fuel pump valve plug (AC-855282) (part of KIT, repair, AUC-6UU0991A)	2
	0040-1538166			AUC-6UU0991A	KIT, repair, fuel pump (AC-1538166)	1
					(Composed of:	
				AUC-A-1006	2 CAP, spring	
				AUC-A-1007	4 CLIP, link pin	
				AUC-6UU01015	1 DIAPHRAGM, assembly	
				AUC-A-1008	1 GASKET, bottom cover	
				AUC-6UU0846	1 GASKET, bowl	
				AUC-2BL067	1 GASKET, mounting	
				AUC-A-1009	1 GASKET, pull rod	
				AUC-A-1010	2 GASKET, valve plug	
				AUC-A-1011	2 LINK	
				AUC-A-1012	1 NUT, pull rod	
				AUC-A-1014	2 PIN, link	
				AUC-A-1013	1 PIN, rocker arm	
				AUC-A-1015	1 ROD, pull	
				AUC-A-1016	1 SCREEN	
				AUC-A-1017	2 SCREW, bottom cover	
				AUC-6W01035	5 SCREW, top cover	
				AUC-A-1018	1 SPRING, diaphragm	
				AUC-A-1019	1 SPRING, rocker arm	
				AUC-A-1020	2 SPRING, valve	
				AUC-A-1021	2 VALVE	
				AUC-A-1022	1 WASHER, lock, pull rod nut	
				AUC-W-7513	5 WASHER, lock, top cover screw	
				AUC-6W1085	1 WASHER, rocker arm pin)	
	G121-0274220			AUC-A-1478	LEVER, priming, fuel pump (AC-1522280)	1
	G121-0276480			AUC-A-1011	LINK, fuel pump (AC-855574) (part of KIT, repair, AUC-6UU0991A)	2
H-1	H001-0718021			AUC-A-1012	NUT, fuel pump pull rod (AC-855213) (part of KIT, repair, AUC-6UU0991A)	1
	G085-1414736			AUC-A-1479	NUT, thumb, fuel pump bail (AC-855763)	1
	4300-17105A			AUC-2UU01361	PIN, drive, engine fuel pump (HM-17105A)	1
	G121-0338652	03-4		AUC-A-1013	PIN, fuel pump rocker arm (AC-1521972) (part of KIT, repair, AUC-6UU0991A)	1
	G121-0338646			AUC-A-1014	PIN, link, fuel pump (AC-855016) (part of KIT, repair, AUC-6UU0991A)	2
	G121-0340612	03-4		AUC-A-1480	PLUG, fuel pump valve (AC-855281)	1
	G067-1200890			AUC-2BL01217	PLUG, pipe, fuel pump drive pin hole (HM-22158A)	1
	0040-1537722	01-2, 4		AUC-6UU4510A	PUMP, fuel, assembly (AC Type "D", No. 1537722)	1
H-1	H001-1013019		216922	AUC-S-3120	SCREW, cap, hex-hd., S., 5/16-18NC-2 x 1	2
H-1	H001-1518008		103320	AUC-S-1346	WASHER, lock, reg., S., 5/16 in.	2
	G121-0373301	03-4		AUC-A-1015	ROD, pull, fuel pump (AC-855250) (part of KIT, repair, AUC-6UU0991A)	1

Note Symbol	Official Stock Number	Figure Number	Part Number		ITEM	Quan. Reqd. per Unit Assy.	Unit Price
			Ordnance	Manufacturer			
Col. 1	Col. 2	Col. 3	Col. 4	Col. 5	Col. 6	Col. 7	Col. 8
					0302 — FUEL PUMP — Continued		
	G067-1501301	03-4		AUC-A-1016	SCREEN, fuel pump (AC-854009) (part of KIT, repair, AUC-6UU0991A)	1	
H-1	H001-5127335			AUC-A-1017	SCREW, fuel pump bottom cover (AC-132108) (part of KIT, repair, AUC-6UU0991A)	3	
H-1	H001-5127361			AUC-6W01035	SCREW, fuel pump top cover (AC-855493) (part of KIT, repair, AUC-6UU0991A)	10	
	G067-1501511			AUC-A-1481	SEAT, fuel pump bowl (AC-854005)	1	
	G085-1102104	03-4		AUC-A-1018	SPRING, fuel pump diaphragm (AC-1521187) (part of KIT, repair, AUC-6UU0991A)	1	
	G121-0389877	03-4		AUC-A-1019	SPRING, fuel pump rocker arm (AC-855253) (part of KIT, repair, AUC-6UU0991A)	1	
	G121-0389876			AUC-A-1020	SPRING, fuel pump valve (AC-856270) (part of KIT, repair, AUC-6UU0991A)	2	
	G085-1102324	03-4		AUC-A-1021	VALVE, fuel pump (AC-855279) (part of KIT, repair, AUC-6UU0991A)	2	
	G121-0442933			AUC-A-1482	WASHER, alinement, fuel pump diaphragm (AC-855029)	1	
	G067-1502000	03-4		AUC-6W01085	WASHER, fuel pump rocker arm pin (AC-1521288) (part of KIT, repair, AUC-6UU0991A)	1	
H-1	H001-7025681			AUC-A-1022	WASHER, lock, fuel pump pull rod nut (AC-855390) (part of KIT, repair, AUC-6UU0991A)	1	
H-1	H001-7025621			AUC-W-7513	WASHER, lock, fuel pump top cover screw (AC-855064) (part of KIT, repair, AUC-6UU0991A)	10	
	G121-0344010	03-4		AUC-A-1483	WASHER, protector, fuel pump lower diaphragm (AC-1521720)	1	
	G121-0344020	03-4		AUC-A-1484	WASHER, protector, fuel pump upper diaphragm (AC-855274)	1	
					0302A — FUEL PUMP MOUNTING PARTS		
	G067-1200525	01-7		AUC-2BL067	GASKET, mounting, fuel pump (HM-22564A) (part of GASKET SET, AUC-2UU01200B and KIT, repair, AUC-6UU0991A)	1	
					0303 — ACCELERATOR AND LINKAGE		
				AUC-10UB2338	BRACKET, accelerator cross shaft (superseded by BRACKET, AUC-10UU3336)	2	
		03-5		AUC-10UU3336	BRACKET, accelerator cross shaft (supersedes BRACKET, AUC-10UB2338)	1	
H-1	H001-0718003	03-5	220066	AUC-S-78	NUT, reg., hex., s-fin., S., 3/8-16NC-2	2	
H-1	H001-1013033	03-5	213733	AUC-S-64	SCREW, cap, hex-hd., S., 3/8-16NC-2 x 1 1/4	2	
H-1	H001-1518009	03-5	103321	AUC-S-1347	WASHER, lock, reg., S., 3/8 in.	4	

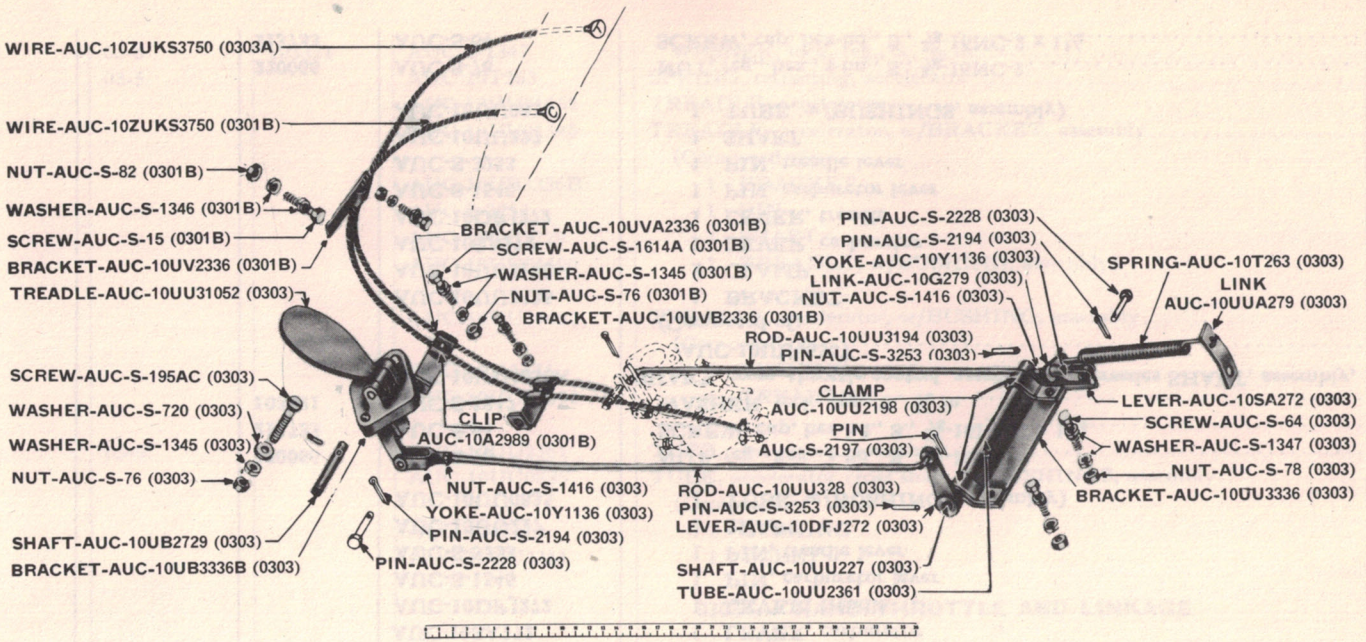

FIGURE 03-5 ACCELERATOR, CHOKE AND THROTTLE RA PD 346182

		03-5		AUC-10UB3336B	BRACKET, accelerator treadle	1
H-1	H001-0718001	03-5	220064	AUC-S-76	NUT, reg., hex., s-fin., S., 1/4-20NC-2	2
H-1	H001-1023137		113993	AUC-S-4043A	SCREW, machine, fl-hd., S., 1/4-20NC-2 x 1 (steel floorboard only)	2
		03-5		AUC-S-195AC	SCREW, machine, oval-hd., S., cd-pltd., 1/4-20NC-2 x 1 3/4 (wooden floorboard only)	2
H-1	H001-1518007	03-5	103319	AUC-S-1345	WASHER, lock, reg., S., 1/4 in.	2
		03-5		AUC-S-720	WASHER, plain, S., 1/4 in. (9/32 in. I.D. x 3/4 in. O.D. x 1/32 thick) (wooden floorboard only)	2
				AUC-12W179	BUSHING, accelerator cross shaft tube	2
				AUC-10UA115	BUSHING, accelerator treadle	2
		03-5		AUC-10UU2198	CLAMP, accelerator cross shaft	2
		03-5		AUC-10SA272	LEVER, accelerator cross shaft carburetor control rod	1
H-1	H001-0829596		112011	AUC-S-1546	PIN, straight, cold-fin., S., .125 x 7/8	1
		03-5		AUC-10DFJ272	LEVER, accelerator cross shaft treadle rod	1
H-1	H001-0829601	03-5	112012	AUC-S-3253	PIN, straight, cold-fin., S., .125 x 1	1
		03-5		AUC-10G279	LINK, accelerator retracting spring, front	1
		03-5		AUC-10UUA279	LINK, accelerator retracting spring, rear	1
H-1	H001-0823002	03-5	114783	AUC-S-2228	PIN, rod end, S., 1/4 in. diam. (treadle rod and carburetor control rod)	2
H-1	H001-0811025	03-5	103361	AUC-S-2194	PIN, cotter, split, S., 1/16 x 1/2	2

Note Symbol	Official Stock Number	Figure Number	Part Number		ITEM	Quan. Reqd. per Unit Assy.	Unit Price
			Ordnance	Manufacturer			
Col. 1	Col. 2	Col. 3	Col. 4	Col. 5	Col. 6	Col. 7	Col. 8
					0303 — ACCELERATOR AND LINKAGE — Continued		
				AUC-10UU328	ROD, accelerator control	1	
H-1	H001-0718021	03-5	218563	AUC-S-1416	NUT, reg., hex., s-fin., S., 1/4-28NF-2	1	
H-1	H001-0811037	03-5	103372	AUC-S-2197	PIN, cotter, split, S., 3/32 x 1/2	1	
H-1	H001-1810020	03-5	104036	AUC-10Y1136	YOKE, rod end, adjustable, light, S., 1/4 in.	1	
		03-5		AUC-10UU3194	ROD, carburetor control	1	
H-1	H001-0718021	03-5	218563	AUC-S-1416	NUT, reg., hex., s-fin., S., 1/4-28NF-2	1	
H-1	H001-0811037		103372	AUC-S-2197	PIN, cotter, split, S., 3/32 x 1/2	1	
H-1	H001-1810020	03-5	104036	AUC-10Y1136	YOKE, rod end, adjustable, light, S., 1/4 in.	1	
		03-5		AUC-10UB2729	SHAFT, accelerator treadle	1	
H-1	H001-0829601	03-5	112012	AUC-S-3253	PIN, straight, cold-fin., S., .125 x 1	1	
		03-5		AUC-10UU227	SHAFT, cross, accelerator	1	
				AUC-10UU4630	SHAFT, cross, throttle control, assembly (superseded by SHAFT, assembly, AUC-10UU4630A)	1	
					(Composed of:		
				AUC-10UB2338	1 BRACKET		
				AUC-10SA272	1 LEVER, carburetor		
				AUC-10DFJ272	1 LEVER, treadle		
				AUC-S-1546	1 PIN, carburetor lever		
				AUC-S-3253	1 PIN, treadle lever		
				AUC-10UU227	1 SHAFT		
				AUC-10UU0835	1 TUBE, w/BUSHINGS, assembly)		
H-1	H001-0718003		220066	AUC-S-78	NUT, reg., hex., s-fin., S., 3/8-16NC-2	2	
H-1	H001-1013033		213733	AUC-S-64	SCREW, cap, hex-hd., S., 3/8-16NC-2 x 1 1/4	2	
H-1	H001-1518009		103321	AUC-S-1347	WASHER, lock, reg., S., 3/8 in.	4	
				AUC-10UU4630A	SHAFT, cross, throttle control, assembly (supersedes SHAFT, assembly, AUC-10UU4630)	1	
					(Composed of:		
				AUC-10UU3336	1 BRACKET		
				AUC-10UU2198	2 CLAMP		
				AUC-10SA272	1 LEVER, carburetor		
				AUC-10DFJ272	1 LEVER, treadle		
				AUC-S-1546	1 PIN, carburetor lever		
				AUC-S-3253	1 PIN, treadle lever		
				AUC-10UU227	1 SHAFT		
				AUC-10UU0835	1 TUBE, w/BUSHINGS, assembly)		
H-1	H001-0718003		220066	AUC-S-78	NUT, reg., hex., s-fin., S., 3/8-16NC-2	2	
H-1	H001-1013033		213733	AUC-S-64	SCREW, cap, hex-hd., S., 3/8-16NC-2 x 1 1/4	2	

H-1	H001-1518009	03-5	103321	AUC-S-1347	WASHER, lock, reg., S., 3/8 in.	4
	0600-10T263	03-5		AUC-10T263	SPRING, retracting, accelerator	1
				AUC-10UU31052	TREADLE, accelerator	1
				AUC-10UU01340	TREADLE, accelerator, w/BRACKET, assembly	1
					(Composed of:	
				AUC-10UB3336B	1 BRACKET	
				AUC-S-3253	1 PIN	
				AUC-10UB2729	1 SHAFT	
				AUC-10UU01490	1 TREADLE, w/BUSHING, assembly)	
				AUC-10UU01490	TREADLE, accelerator, w/BUSHING, assembly	1
					(Composed of:	
				AUC-10UA115	2 BUSHING	
				AUC-10UU31052	1 TREADLE)	
		03-5		AUC-10UU2361	TUBE, accelerator cross shaft	1
				AUC-10UU0835	TUBE, accelerator cross shaft, w/BUSHINGS, assembly	1
					(Composed of:	
				AUC-12W179	2 BUSHING	
				AUC-10UU2361	1 TUBE)	
					0303A — HAND THROTTLE AND LINKAGE	
				AUC-10UKS31270	WIRE, throttle control, assembly	1
H-1	H001-4167600		103026	AUC-S-1418	NUT, light, hex., s-fin., S., 3/8-24NF-2	1
H-1	H001-1517009		110730	AUC-S-3159	WASHER, lock, lgt., S., 3/8 in. (.390 I.D. x .640 O.D. x 1/16 thick)	1
		03-5		AUC-10ZUKS3750	WIRE, throttle control, assembly (for service only)	1
H-1	H001-4167600		103026	AUC-S-1418	NUT, light, hex., s-fin., S., 3/8-24NF-2	1
H-1	H001-1517009		110730	AUC-S-3159	WASHER, lock, lgt., S., 3/8 in. (.390 I.D. x .640 O.D. x 1/16 thick)	1
					0304 — FUEL LINES	
		03-6		AUC-6UU2317	BRACKET, fuel line (filter to pump)	1
		03-6		AUC-6UUA2317	BRACKET, fuel line (pump to carburetor)	1
				AUC-10C2303	BRACKET, fuel line (tank to filter)	3
		03-6		AUC-16S244	CLIP, fuel line	5
H-1	H001-0718001		220064	AUC-S-76	NUT, reg., hex., s-fin., S., 1/4-20NC-2	5
H-1	H001-5150151		133043	AUC-S-1614AC	SCREW, machine, rd-hd., S., cd-pltd., 1/4-20NC-2 x 3/4	5
H-1	H001-1518007		103319	AUC-S-1345	WASHER, lock, reg., S., 1/4 in.	10
		03-6		AUC-6D022	COCK, shutoff, br., tee-hdl., 1/4 in. male and female pipe ends (fuel pump inlet)	1
				AUC-S-5865	CONNECTOR, compression tube, 3/8 in., 1/4 in. male pipe end (with nut and sleeve) (fuel lines, tank to filter and pump to carburetor) (superseded by CONNECTOR, AUC-25G944)	3
H-6	H006-0312600	03-6	279854	AUC-25G944	CONNECTOR, compression tube, 3/8 in., 1/4 in. male pipe end (with nut and sleeve) (BWE-205053) (fuel lines, tank to filter and pump to carburetor) (supersedes CONNECTOR, AUC-S-5865)	3

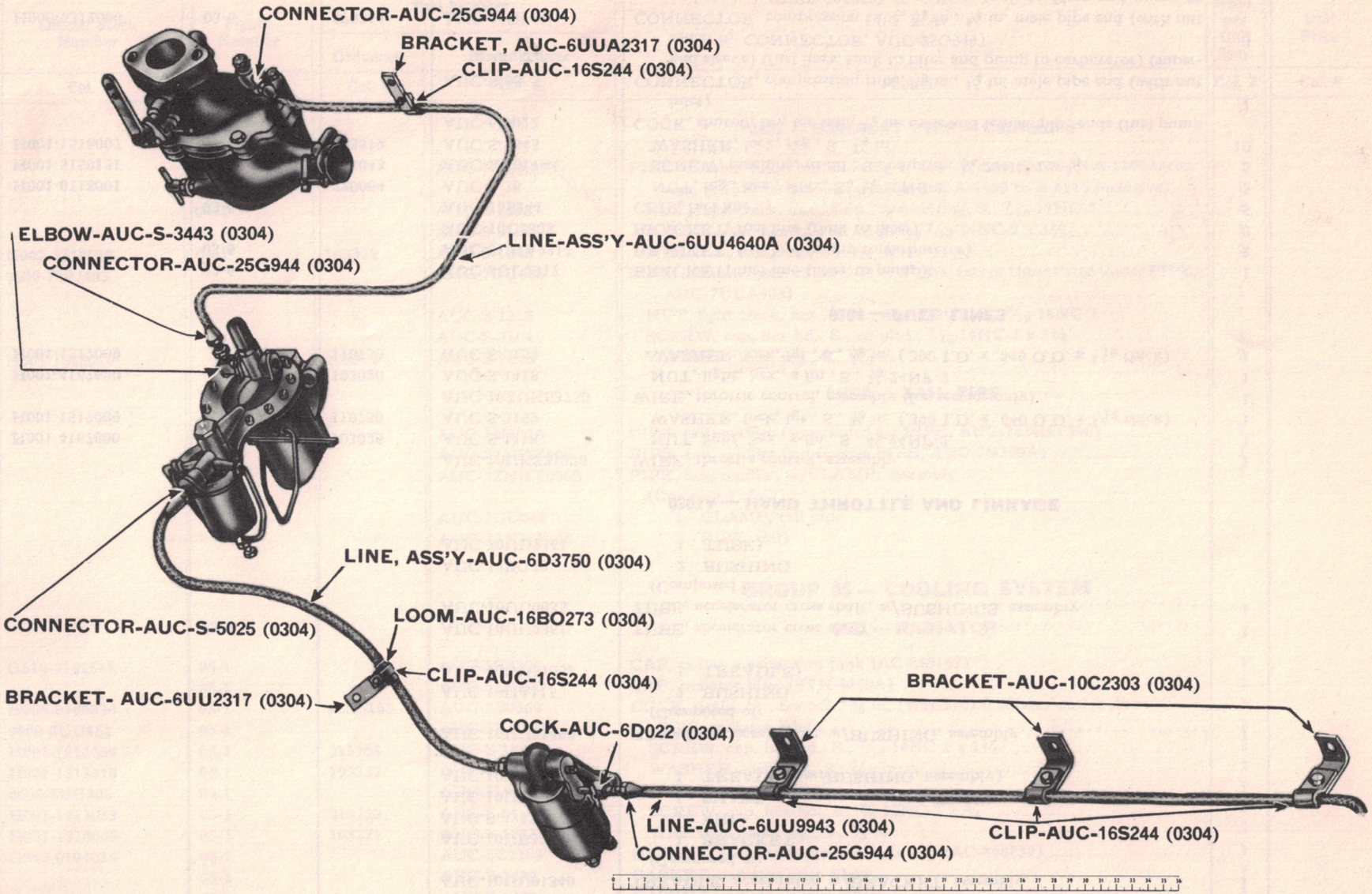

FIGURE 03-6 FUEL LINES RA PD 346183

Note Symbol	Official Stock Number	Figure Number	Part Number		ITEM	Quan. Reqd. per Unit Assy.	Unit Price
			Ordnance	Manufacturer			
Col. 1	Col. 2	Col. 3	Col. 4	Col. 5	Col. 6	Col. 7	Col. 8
					0304 — FUEL LINES — Continued		
H-6	H006-0213540	03-6	118750	AUC-S-5025	CONNECTOR, flared tube, 3/8 in., 1/4 in. male pipe end (without nut) (fuel pump inlet)	1	
	G160-0169031	03-6		AUC-S-3443	ELBOW, street, br., 90 deg., 1/4 in. male and female (WH-3400X4) (fuel pump outlet)	1	
	G510-0276499	03-6		AUC-6D3750	LINE, flexible, fuel, assembly (fuel filter to pump)	1	
		03-6		AUC-6UU4640A	LINE, fuel, w/LOOM, assembly (fuel pump to carburetor) (Composed of:	1	
				AUC-25G944	2 CONNECTOR		
				AUC-16B0273	1 LOOM, 32 1/2 in. long		
				AUC-6UU0941	1 TUBING, S., 35 1/2 in. long)		
		03-6		AUC-6UU9943	LINE, fuel, w/LOOM, assembly (fuel tank to filter) (Composed of:	1	
				AUC-16B0273	1 LOOM, 62 3/4 in. long		
				AUC-S-5281	1 TUBING, S., 65 1/4 in. long)		
		03-6		AUC-16B0273	LOOM, single wall, lacquer finish, 7/16 in. I.D. x 2 in. long (flexible fuel line)	1	
				AUC-6UU0941	TUBING, S., welded, anld., 3/8 in. O.D. x .028 wall thickness (No. 22 BWG) (fuel line, pump to carburetor)	1	
					0305 — GOVERNOR		
H-12	H012-0709601	03-7	709601	AUC-2UU01466	BEARING, ball, thrust, governor drive shaft, lower (PG-X-339)	1	
H-12	H012-0710045	03-7	710045	AUC-2T01048	BEARING, ball, thrust, governor drive shaft, upper (PG-X-317) (part of KIT, repair, AUC-2UU01506)	1	
	7260-G-6701	03-7		AUC-2UU01023	BODY, governor (PG-G-6701)	1	
	7260-GC-514	01-1, 3		AUC-2UU0660	BODY, governor, assembly (PG-GC-514)	1	
	G038-0111826	03-7		AUC-2UU01445	BUSHING, governor drive shaft, lower (PG-G-3771) (part of KIT, repair, AUC-2UU01506)	1	
	G509-0129218	03-7		AUC-2UU01443	BUSHING, governor drive shaft, upper (PG-G-3770) (part of KIT, repair, AUC-2UU01506)	1	
	7260-G-2811	03-7		AUC-2T01036	CAP, governor body (PG-G-2811)	1	
H-1	H001-1026091		110448	AUC-2UU01468	SCREW, machine, oval-fil-hd., No. 10 (.190)-24NC-2 x 5/8 (PG-X-825) (supersedes SCREW, AUC-2T01042)	4	
				AUC-2UU01041	SCREW, machine, oval-fil-hd., dld. f/lkg-wire, No. 10 (.190)-24NC-2 x 5/8 (PG-G-7485) (supersedes SCREW, AUC-2T01042)	2	

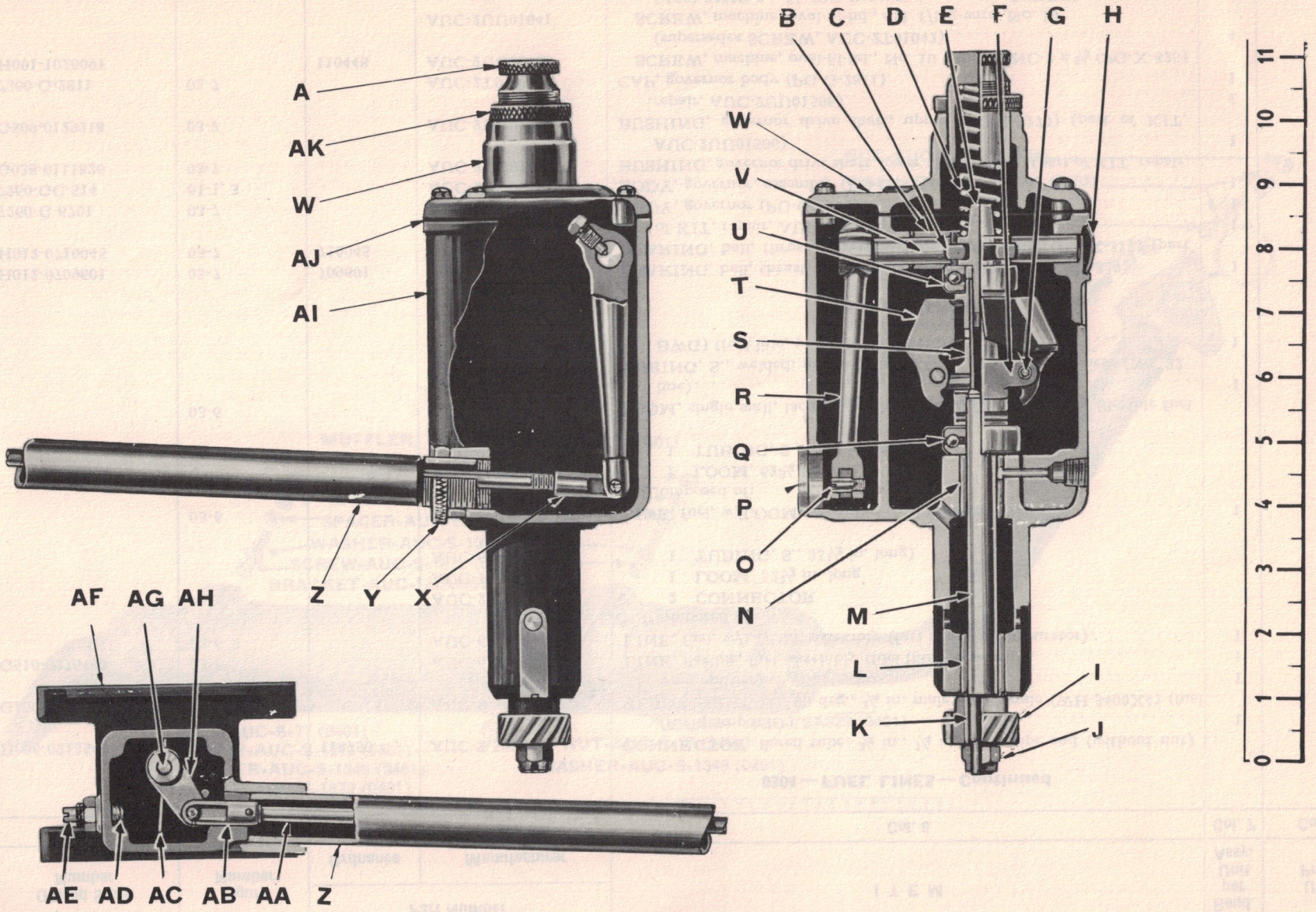

FIGURE 03-7

GOVERNOR AND CONTROLS

RA PD 346184

FIGURE 03-7 GOVERNOR AND CONTROLS RA PD 346184A

KEY	ITEM	PART NO.	GROUP
A	SCREW, governor, adjusting	AUC-2T01015	0305
B	SPACER, governor yoke	AUC-2T01031	0305
C	YOKE, governor	AUC-2T01035	0305
D	SPRING, governor	AUC-2UU0344	0305
E	COLLAR, governor spring	AUC-2T01022	0305
F	SPIDER, governor, w/HUB, assembly	AUC-2UU01454	0305
G	PIN, governor weight	AUC-2UU01441	0305
H	PLUG, expansion	AUC-2UU01469	0305
I	GEAR, driven, governor	AUC-2UU01437	0305
J	NUT, castle	AUC-S-809	0305
K	KEY, Woodruff	AUC-S-2325	0305
L	BUSHING, drive shaft, lower	AUC-2UU01445	0305
M	SHAFT, drive, governor	AUC-2UU01451	0305
N	BUSHING, drive shaft, upper	AUC-2UU01443	0305
O	SCREW, governor throttle rod	AUC-2UU01415	0305
P	CAP, governor drive	AUC-2UU01398	0305
Q	BEARING, ball, thrust	AUC-2UU01466	0305
R	LEVER, governor throttle	AUC-2UU01452	0305
S	SLEEVE, thrust, governor	AUC-2UU01401	0305
T	WEIGHT, governor	AUC-2UU01453	0305
U	BEARING, ball, thrust	AUC-2T01048	0305
V	SHAFT, rocker, governor	AUC-2T01027	0305
W	CAP, governor body	AUC-2T01036	0305
X	END, governor throttle rod	AUC-2T01014	0305A
Y	NUT, lock	AUC-2UU01419	0305A
Z	TUBE, governor throttle rod	AUC-2UU01528	0305A
AA	ROD, governor throttle	AUC-2UU01414	0305A
AB	END, governor throttle rod	AUC-2T01013	0305A
AC	VALVE, butterfly, governor	AUC-2UU01459	0305A
AD	SPRING, bumper	AUC-2UU01456	0305A
AE	SCREW, adjusting	AUC-2UU01457	0305A
AF	BOX, governor valve	AUC-2UU01458	0305A
AG	SHAFT, governor butterfly valve	AUC-2UU01461	0305A
AH	LEVER, governor valve shaft	AUC-2UU01438	0305A
AI	BODY, governor	AUC-2UU01023	0305
AJ	GASKET, governor body	AUC-2T01016	0305
AK	NUT, lock, governor adjusting screw	AUC-2T01038	0305

Note Symbol	Official Stock Number	Figure Number	Part Number		ITEM	Quan. Reqd. per Unit Assy.	Unit Price
			Ordnance	Manufacturer			
Col. 1	Col. 2	Col. 3	Col. 4	Col. 5	Col. 6	Col. 7	Col. 8
					0305 — GOVERNOR — Continued		
H-1	H001-1518005		106497	AUC-W-7508	WASHER, lock, reg., S., No. 10 (.190) (.200 I.D. x .325 O.D. x 3/64 thick) (PG-X-540)	6	
	7600-G-2237	03-7		AUC-2UU01398	CAP, governor drive (PG-G-2237)	1	
	G509-0139850	03-7		AUC-2T01022	COLLAR, governor spring (PG-G-2682)	1	
	G509-0194039	03-7		AUC-2T01016	GASKET, governor body (PG-G-2293)	1	
	4300-15787A	01-18		AUC-2UU0197	GEAR, drive, governor (HM-15787A)	1	
H-1	H001-1031001			AUC-2UU01384	SCREW, mounting, governor drive gear (HM-4253A)	2	
	G509-0195005	03-7		AUC-2UU01437	GEAR, driven, governor (PG-G-2335)	1	
H-1	H001-0518005	03-7	103904	AUC-S-2325	KEY, Woodruff, S., 3/32 x 1/2 (No. 304) (PG-X-461)	1	
H-1	H001-0713024	03-7	103045	AUC-S-809	NUT, castle, S., 3/8-24NF-2	1	
H-1	H001-0811039		103373	AUC-S-2198	PIN, cotter, split, S., 3/32 x 3/4 (part of KIT, repair, AUC-2UU01506)	1	
	G513-7001628			AUC-2UU5650	GOVERNOR, assembly (PG-MA-1377) (Includes all parts in Groups 0305 and 0305A, except mounting parts and GEAR, AUC-2UU0197)	1	
	7260-KA-25			AUC-2UU01506	KIT, repair, governor (PG-KA-25)	1	
					(Composed of:		
				AUC-2T01048	1 BEARING, drive shaft, upper		
				AUC-2UU01445	1 BUSHING, drive shaft, lower		
				AUC-2UU01443	1 BUSHING, drive shaft, upper		
				AUC-6N2375B	1 GASKET, carburetor		
				AUC-S-1474	1 GASKET, governor to manifold		
				AUC-2UU01439	1 GASKET, valve box cover plate		
				AUC-S-2198	1 PIN, cotter		
				AUC-2UU01457	1 SCREW, adjusting, bumper spring		
				AUC-A-1024	1 SEAL and WIRE		
				AUC-A-1023	1 SLEEVE, w/BEARING, assembly		
				AUC-2UU0344	1 SPRING		
				AUC-2UU01456	1 SPRING, bumper)		
	7260-G-3983	03-7		AUC-2UU01452	LEVER, governor throttle (PG-G-3983)	1	
	G509-0382350			AUC-2T01039	SCREW, set, hdls., dog-pt., S., 1/4-20NC-2 x 1/2 (PG-X-572)	1	
	G509-0279959	03-7		AUC-2T01038	NUT, lock, governor adjusting screw (PG-G-2141)	1	
	G509-0338717	03-7		AUC-2UU01441	PIN, governor weight (PG-G-5950)	2	
H-6	H006-0282425	03-7	501590	AUC-2UU01469	PLUG, expansion, S., 9/16 in. diam. (governor body)	1	
	7260-G-6260			AUC-2UU01015	SCREW, adjusting, governor (PG-G-6260) (superseded by SCREW, AUC-2T01015)	1	
	G509-0382220	03-7		AUC-2T01015	SCREW, adjusting, governor (PG-G-2291) (supersedes SCREW, AUC-2UU01015)	1	

	G162-1667121	03-7		AUC-2UU01415	SCREW, governor throttle rod (governor end) (PG-G-2289)	1
	7260-X-600			AUC-2T01042	SCREW, machine, oval-fil-hd., dld. f/lkg-wire, No. 10 (.190)-24NC-2 x 5/8 (PG-X-600) (superseded by SCREWS, AUC-2UU01041 and AUC-2UU01468)	6
	3967-21035			AUC-2D0228	SEAL and WIRE, governor body cap (HA-21035)	1
				AUC-A-1024	SEAL and WIRE, governor body cap (PG-A-476 and A-472) (furnished in KIT, repair, AUC-2UU01506 only)	1
	7260-G-3978	03-7		AUC-2UU01451	SHAFT, drive, governor (PG-G-3978)	1
	G509-0383950	03-7		AUC-2T01027	SHAFT, rocker, governor (PG-G-2781)	1
	G509-0386240	03-7		AUC-2UU01401	SLEEVE, thrust, governor (PG-G-2282)	1
				AUC-A-1023	SLEEVE, thrust, governor, w/BEARING, assembly (PG-A-2068) (part of KIT, repair, AUC-2UU01506)	1
	G509-0388045	03-7		AUC-2T01031	SPACER, governor yoke (PG-G-2784)	1
		03-7		AUC-2UU01454	SPIDER, governor, w/HUB, assembly (PG-A-1870)	1
H-1	H001-4568562			AUC-2UU01463	PIN, groove, S., 1/8 x 5/8 (PG-X-997)	1
	7260-SN-1150	03-7		AUC-2UU0344	SPRING, governor (PG-SN-1150) (part of KIT, repair, AUC-2UU01506)	1
	G509-0445184	03-7		AUC-2UU01453	WEIGHT, governor (PG-G-4189)	2
	G509-0482783	03-7		AUC-2T01035	YOKE, governor (PG-G-2807)	1
	G162-1579806			AUC-2UU01464	PIN, taper, S., No. 1 x 3/4 (PG-X-74)	1
					0305A — GOVERNOR CONTROLS	
	7260-S2B-831	03-7		AUC-2UU01458	BOX, governor valve (PG-S2B-831)	1
H-1	H001-1013054		213765	AUC-S-1881	SCREW, cap, hex-hd., S., 7/16-14NC-2 x 1 1/4	2
H-1	H001-1518010		103322	AUC-S-1348	WASHER, lock, reg., S., 7/16 in.	2
	7260-VB-191			AUC-2UU0670	BOX, governor valve, assembly (PG-VB-191)	1
	G162-1454707	03-7		AUC-2T01014	END, governor throttle rod (governor end) (PG-G-2281)	1
	G509-0276796	03-7		AUC-2T01013	END, governor throttle rod (valve box end) (PG-G-2280)	1
H-1	H001-0811025		103361	AUC-S-2194	PIN, cotter, split, S., 1/16 x 1/2	1
	G509-0338801			AUC-S-1590	PIN, straight, cold-fin., S., .09375 x 7/16 (PG-X-17)	1
	0600-2UU01433			AUC-2UU01433	GASKET, governor to manifold (superseded by GASKET, AUC-S-1474)	1
	G156-0194025	01-7		AUC-S-1474	GASKET, governor to manifold (part of GASKET SETS, AUC-2UU01200B, AUC-2UU01390A and AUC-2UU01504A and KIT, repair, AUC-2UU01506) (supersedes GASKET, AUC-2UU01433)	1
	G509-0194036			AUC-2UU01439	GASKET, governor valve box cover plate (PG-G-2376) (part of KIT, repair, AUC-2UU01506)	1
	G509-0274561	03-7		AUC-2UU01438	LEVER, governor valve shaft (PG-G-2373)	1
	G509-0338718			AUC-S-1515	PIN, straight, cold-fin., S., .09375 x 11/16 (PG-X-11)	1
	7260-G-2290	03-7		AUC-2UU01419	NUT, lock, governor throttle rod tube (PG-G-2290)	1
	G509-0338716			AUC-2T01017	PIN, governor valve shaft lever (PG-G-2374)	1
	G509-0140261			AUC-2T01049	PLATE, cover, governor valve box (PG-X-556)	1
H-1	H001-1030063		100736	AUC-2T01043	SCREW, machine, rd-hd., S., No. 6 (.138)-32NC-2 x 1/4 (PG-X-198)	4
H-6	H006-0282405		501586	AUC-S-4231	PLUG, expansion, S., 5/16 in. diam. (PG-X-532) (governor butterfly valve shaft hole)	1
	7260-G-2288	03-7		AUC-2UU01414	ROD, governor throttle (PG-G-9600)	1

Note Symbol	Official Stock Number	Figure Number	Part Number		ITEM	Quan. Reqd. per Unit Assy.	Unit Price
			Ordnance	Manufacturer			
Col. 1	Col. 2	Col. 3	Col. 4	Col. 5	Col. 6	Col. 7	Col. 8
					0305A — GOVERNOR CONTROLS — Continued		
	7260-A-2208			AUC-2UU01440	ROD, governor throttle, assembly (PG-A-2208)	1	
					(Composed of:		
				AUC-2T01014	1 END (governor end)		
				AUC-2T01013	1 END (valve box end)		
				AUC-S-2194	1 PIN, cotter		
				AUC-S-1590	1 PIN, straight		
				AUC-2UU01414	1 ROD, throttle)		
	G509-0382137	03-7		AUC-2UU01457	SCREW, adjusting, governor bumper spring (PG-S2A-345) (part of KIT, repair, AUC-2UU01506)	1	
	G509-0314841			AUC-2UU01465	NUT, jam, hex., s-fin., S., 3/8-24NF-2	1	
	3967-21035			AUC-2D0228	SEAL and WIRE, governor valve box plate (HA-21035)	1	
				AUC-A-1024	SEAL and WIRE, governor valve box plate (PG-A-476 and A-472) (furnished in KIT, repair, AUC-2UU01506 only)	1	
	G509-0383990	03-7		AUC-2UU01461	SHAFT, governor butterfly valve (PG-S2D-170)	1	
	G509-0389515	03-7		AUC-2UU01456	SPRING, bumper, governor valve box (PG-SN-213) (part of KIT, repair, AUC-2UU01506)	1	
	7260-G-2287	03-7		AUC-2UU01528	TUBE, governor throttle rod (PG-G-2287)	1	
	7260-A-2209	01-1		AUC-2UU01450	TUBE, governor throttle rod, w/NUT, assembly (PG-A-2209)	1	
					(Composed of:		
				AUC-2UU01419	1 NUT, lock		
				AUC-2UU01528	1 TUBE)		
	G509-0427265	03-7		AUC-2UU01459	VALVE, butterfly, governor (PG-SC-150)	1	
H-1	H001-1030063		100736	AUC-2T01043	SCREW, machine, rd-hd., S., No. 6 (.138)-32NC-2 x 1/4 (PG-X-198)	2	
H-1	H001-1518003		106495	AUC-S-1343	WASHER, lock, reg., S., No. 6 (PG-X-596)	2	
					0306 — FUEL FILTERS		
	G121-0124520			AUC-6URK0955	BOWL, fuel filter (casting) (Z-F8X50) (superseded by BOWL, AUC-6URK0955A)	1	
	G121-0124520	03-8		AUC-6URK0955A	BOWL, fuel filter (steel) (Z-F8X59) (supersedes BOWL, AUC-6URK0955)	1	
	G116-1569094			AUC-6URK0953	ELEMENT, fuel filter, assembly (brass) (Z-F6X17) (superseded by ELEMENT, AUC-6URK0953A)	1	
	9960-F6X8	03-8		AUC-6URK0953A	ELEMENT, fuel filter, assembly (paper) (Z-F6X8) (supersedes ELEMENT, AUC-6URK0953)	1	
	G509-0183053			AUC-6URK31020	FILTER, fuel, assembly (Z-F360X7-2) (superseded by FILTER, assembly, AUC-6URK31020A)	1	

	9960-FR390-2			AUC-6URK31020A	FILTER, fuel, assembly (Z-FR390-2) (supersedes FILTER, assembly, AUC-6URK31020)	1
H-1	H001-4026541		BBAX1C-1	AUC-S-78C	NUT, reg., hex., s-fin., S., cd-pltd., 3/8-16NC-2	2
H-1	H001-5026781		213741	AUC-S-1879C	SCREW, cap, hex-hd., S., cd-pltd., 3/8-16NC-2 x 1 3/4	2
H-1	H001-7124741		178551	AUC-S-3299C	WASHER, lock, ext-int. teeth, reg., S., cd-pltd., 3/8 in.	2
H-1	H001-7021801		138542	AUC-S-3297C	WASHER, lock, int. teeth, reg., S., cd-pltd., 3/8 in.	4
	G121-0193792	03-8		AUC-6URK0949	GASKET, fuel filter bowl (Z-F1X10)	1
	G121-0193794	03-8		AUC-6URK0951	GASKET, fuel filter bowl nut (Z-F1X15)	1
	G116-1611403	03-8		AUC-6URK0954	HEAD, fuel filter (Z-F7X122)	1
H-1	H001-5417001	03-8	121906	AUC-6URK0952	NUT, fuel filter bowl (Z-F5X7)	1
	G509-0314414	03-8		AUC-6URK0957	NUT, fuel filter element (Z-F26X3)	1
H-6	H006-0283195	03-8	127951	AUC-6URK0958	PLUG, pipe, fuel filter drain (Z-F36X9)	1
H-6	H006-0283805	03-8	219189	AUC-S-629	PLUG, pipe, sq-hd., black, 1/4 in. (fuel filter head)	2
	G121-0392347	03-8		AUC-6URK0956	STUD, fuel filter, assembly (Z-F16X27)	1

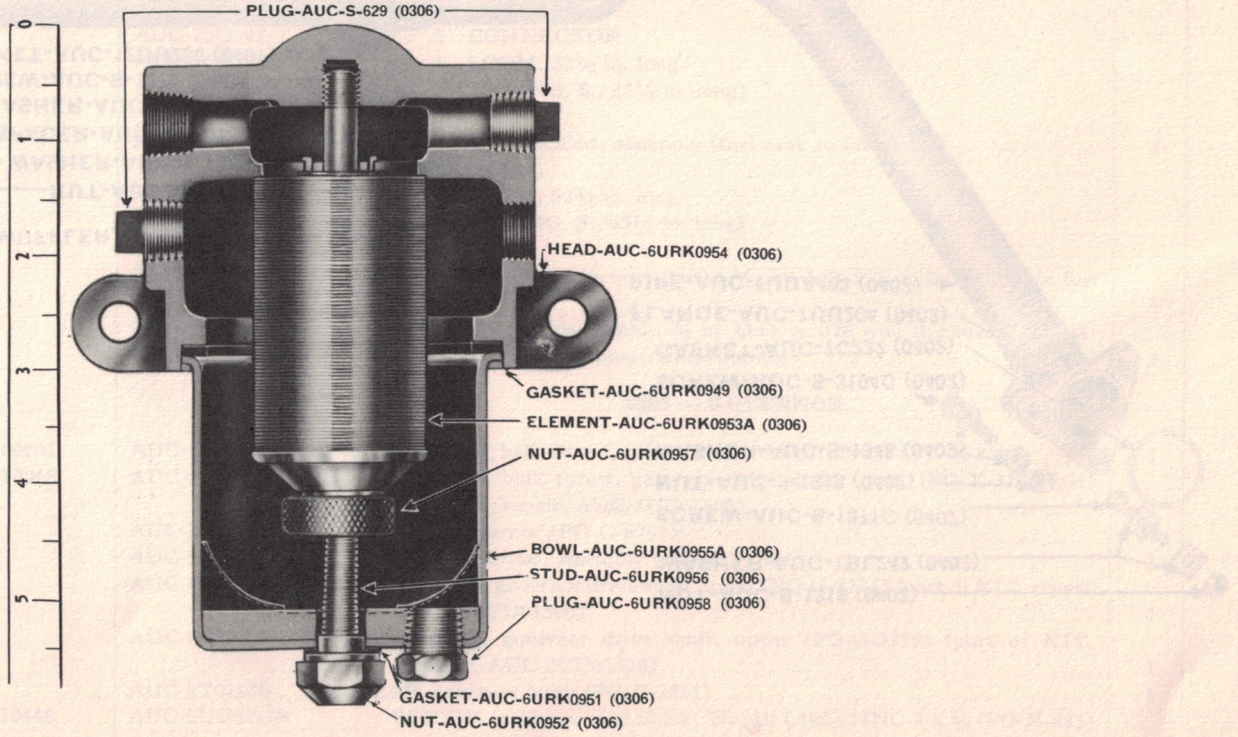

FIGURE 03-8 FUEL FILTER RA PD 346185

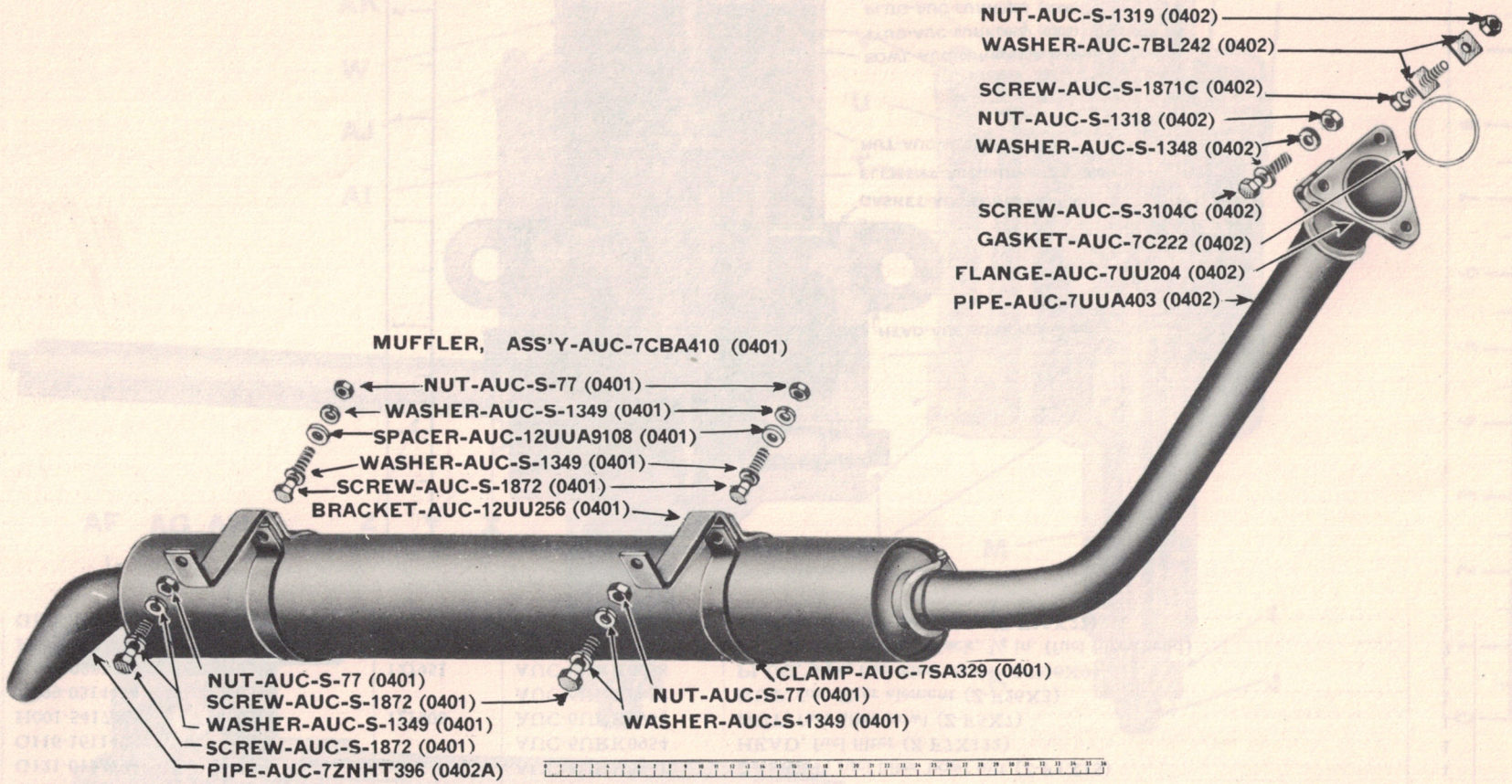

FIGURE 04-1

MUFFLER, EXHAUST AND TAIL PIPE

RA PD 346186

Note Symbol	Official Stock Number	Figure Number	Part Number		ITEM	Quan. Reqd. per Unit Assy.	Unit Price
			Ordnance	Manufacturer			
Col. 1	Col. 2	Col. 3	Col. 4	Col. 5	Col. 6	Col. 7	Col. 8
					GROUP 04 — EXHAUST SYSTEM		
					0401 — MUFFLER		
		04-1, 15-1		AUC-12UU256	BRACKET, muffler	2	
H-1	H001-0718005	04-1	220068	AUC-S-77	NUT, reg., hex., s-fin., S., ½-13NC-2	2	
H-1	H001-1013072	04-1	217055	AUC-S-1872	SCREW, cap, hex-hd., S., ½-13NC-2 x 1½	2	
H-1	H001-1518011	04-1	103323	AUC-S-1349	WASHER, lock, reg., S., ½ in.	4	
		04-1		AUC-7SA329	CLAMP, muffler (used on following U-7144-T cars: A-600 to A-1169 inclusive, A-1552 to A-1664 inclusive and A-4459 to A-4815 inclusive)	2	
H-1	H001-0718005	04-1	220068	AUC-S-77	NUT, reg., hex., s-fin., S., ½-13NC-2	2	
H-1	H001-1013074	04-1	217057	AUC-S-922	SCREW, cap, hex-hd., S., ½-13NC-2 x 2	2	
		04-1		AUC-12UUA9108	SPACER, muffler clamp, ½ in. (17/32 in. I.D. x 1 in. O.D. x ¼ in. thick) (supersedes WASHER, AUC-S-347)	2	
H-1	H001-1518011	04-1	103323	AUC-S-1349	WASHER, lock, reg., S., ½ in.	4	
				AUC-7UU329	CLAMP, muffler (used on all U-7144-T cars, except those listed under CLAMP, AUC-7SA329)	2	
H-1	H001-0718005		220068	AUC-S-77	NUT, reg., hex., s-fin., S., ½-13NC-2	2	
H-1	H001-1013074		217057	AUC-S-922	SCREW, cap, hex-hd., S., ½-13NC-2 x 2	2	
				AUC-12UUA9108	SPACER, muffler clamp, ½ in. (17/32 in. I.D. x 1 in. O.D. x ¼ in. thick) (supersedes WASHER, AUC-S-347)	2	
H-1	H001-1518011		103323	AUC-S-1349	WASHER, lock, reg., S., ½ in.	4	
	7440-S-198	04-1		AUC-7CBA410	MUFFLER, assembly (used on following U-7144-T cars: A-600 to A-1169 inclusive, A-1552 to A-1664 inclusive and A-4459 to A-4815 inclusive)	1	
				AUC-7UU510	MUFFLER, w/flame ARRESTER, assembly (used on all U-7144-T cars, except those listed under MUFFLER, assembly, AUC-7CBA410)	1	
				AUC-S-347	WASHER, plain, special, S., ½ in. (17/32 in. I.D. x 1⅜ in. O.D. x ¼ in. thick) (muffler clamp) (superseded by SPACER, AUC-12UUA9108)	2	
					0402 — EXHAUST PIPE		
	0600-7UU204	04-1		AUC-7UU204	FLANGE, exhaust pipe	1	
		04-1		AUC-S-1319	NUT, light-thick, hex., s-fin., non-seizing, S., ½-13NC-2 (supersedes NUT, AUC-7T144)	3	
		04-1		AUC-S-1871C	SCREW, cap, hex-hd., S., cd-pltd., ½-13NC-2 x 2½	3	
	0600-7BL242	04-1		AUC-7BL242	WASHER, lock, exhaust pipe flange	6	
	0600-7C222	01-7, 04-1		AUC-7C222	GASKET, exhaust pipe flange (part of GASKET SETS, AUC-2UU01200B, AUC-2UU01390A and AUC-2UU01504A)	1	
				AUC-7T144	NUT, exhaust pipe flange (superseded by NUT, AUC-S-1319)	3	

Note Symbol	Official Stock Number	Figure Number	Part Number		ITEM	Quan. Reqd. per Unit Assy.	Unit Price
			Ordnance	Manufacturer			
Col. 1	Col. 2	Col. 3	Col. 4	Col. 5	Col. 6	Col. 7	Col. 8
					0402 — EXHAUST PIPE — Continued		
		04-1		AUC-7UUA403	PIPE, exhaust (used on following U-7144-T cars: A-600 to A-1169 inclusive, A-1552 to A-1664 inclusive and A-4459 to A-4815 inclusive)	1	
		04-1		AUC-S-1318	NUT, light-thick, hex., s-fin., non-seizing, S., 7/16-14NC-2	1	
		04-1		AUC-S-3104C	SCREW, cap, hex-hd., S., cd-pltd., 7/16-14NC-2 x 3 1/2	1	
H-1	H001-1518010	04-1	103322	AUC-S-1348	WASHER, lock, reg., S., 7/16 in.	2	
	0600-7UU403			AUC-7UU403	PIPE, exhaust (used on all U-7144-T cars, except those listed under PIPE, AUC-7UUA403)	1	
				AUC-S-1318	NUT, light-thick, hex., s-fin., non-seizing, S., 7/16-14NC-2	1	
				AUC-S-3104	SCREW, cap, hex-hd., S., cd-pltd., 7/16-14NC-2 x 3 1/2	1	
H-1	H001-1518010		103322	AUC-S-1348	WASHER, lock, reg., S., 7/16 in.	2	
					0402A — TAIL PIPE		
				AUC-7N309A	PIPE, tail, muffler (superseded by PIPE, AUC-7ZNHT396)	1	
		04-1		AUC-7ZNHT396	PIPE, tail, muffler (supersedes PIPE, AUC-7N309A)	1	
				AUC-7ZNHT096S	PIPE, tail, muffler, w/CLAMP, assembly	1	
					(Composed of:		
				AUC-7UU047	1 CLAMP, tail pipe		
				AUC-7ZNHT396	1 PIPE, tail)		
					GROUP 05 — COOLING SYSTEM		
					0501 — RADIATOR		
	G510-0131548	05-1		AUC-5C3300	CAP, radiator expansion tank (AC-850167)	1	
		05-1		AUC-5D0300	CAP, radiator filler (STN-4670A)	1	
H-6	H006-0100820	05-1	A215165	AUC-5B0369	COCK, drain, br., tee-hdl., 3/8 in. (WH-270) (radiator outlet elbow)	1	
	0600-5UU461	05-1		AUC-5UU461	ELBOW, radiator inlet	1	
H-1	H001-1013054	05-1	213765	AUC-S-1881	SCREW, cap, hex-hd., S., 7/16-14NC-2 x 1 1/4	2	
H-1	H001-1518010	05-1	103322	AUC-S-1348	WASHER, lock, reg., S., 7/16 in.	2	
	0600-5UU305	05-1		AUC-5UU305	ELBOW, radiator outlet	1	
H-1	H001-1013033	05-1	213733	AUC-S-64	SCREW, cap, hex-hd., S., 3/8-16NC-2 x 3/4	2	
H-1	H001-1518009	05-1	103321	AUC-S-1347	WASHER, lock, reg., S., 3/8 in.	2	
	G510-0194035	05-1		AUC-5C2169	GASKET, radiator expansion tank cap (AC-846732)	1	
		05-1		AUC-S-1489	GASKET, radiator inlet elbow	1	
		05-1		AUC-S-1478	GASKET, radiator outlet elbow	1	
				AUC-5UU590	RADIATOR, assembly (includes shell, core, tank, filler and cap) (superseded by RADIATOR, assembly, AUC-5UUA590)	1	

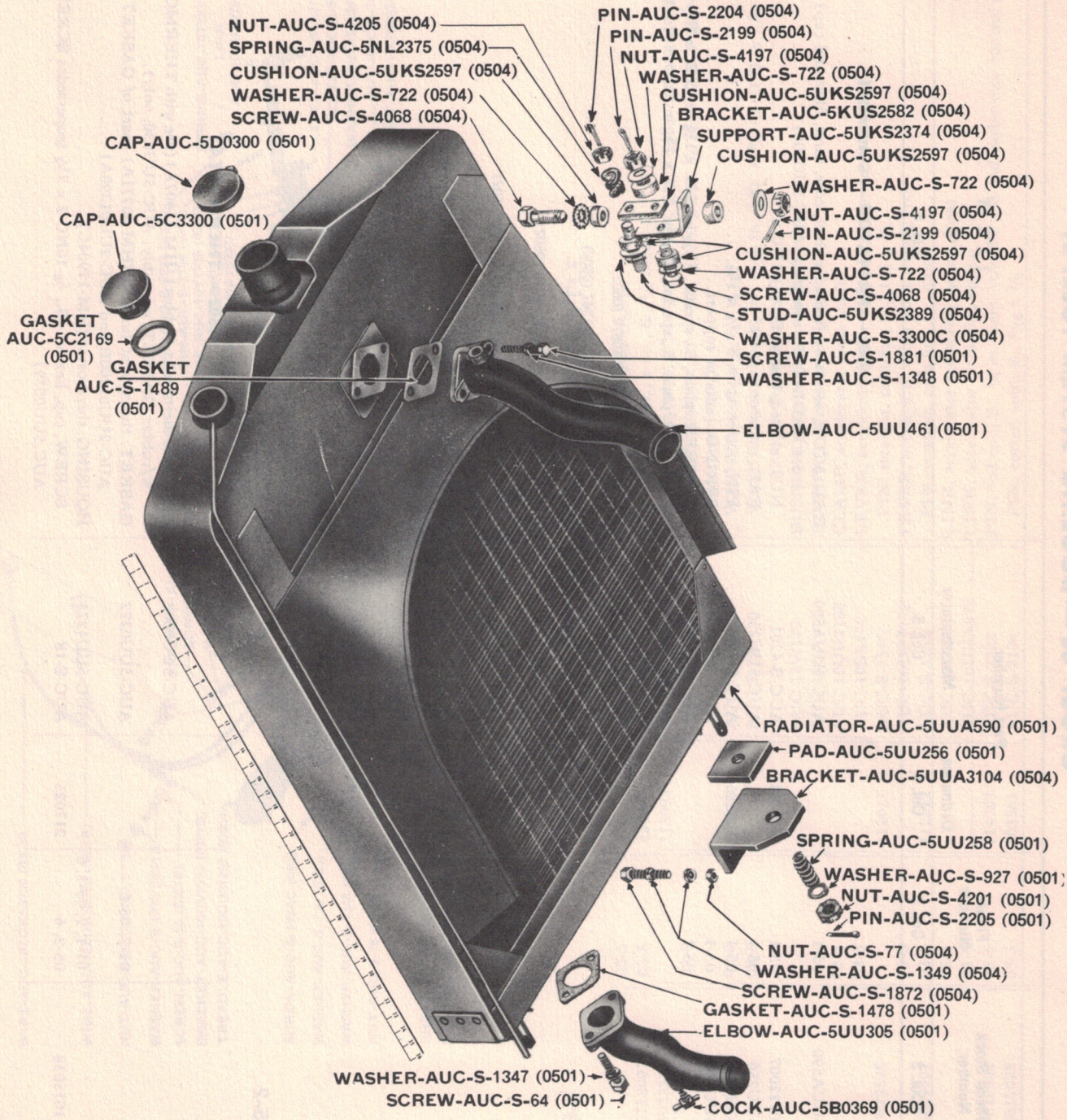

FIGURE 05-1 RADIATOR, SHELL, CORE, TANK AND FILLER RA PD 346187

Note Symbol	Official Stock Number	Figure Number	Part Number		ITEM	Quan. Reqd. per Unit Assy.	Unit Price
			Ordnance	Manufacturer			
Col. 1	Col. 2	Col. 3	Col. 4	Col. 5	Col. 6	Col. 7	Col. 8
					0501 — RADIATOR — Continued		
	0600-5UUA590	05-1		AUC-5UUA590	RADIATOR, assembly (includes shell, core, tank, filler and cap) (supersedes RADIATOR, assembly, AUC-5UU590)	1	
H-1	H001-0722007	05-1	218488	AUC-S-4201	NUT, slotted, heavy, S., 5/8-11NC-2	2	
	0600-5UU256	05-1		AUC-5UU256	PAD, radiator support	2	
H-1	H001-0811053	05-1	103386	AUC-S-2205	PIN, cotter, split, S., 1/8 x 1 1/4	2	
	0600-5UU258	05-1		AUC-5UU258	SPRING, radiator support	2	
		05-1		AUC-S-927	WASHER, plain, S., special, 21/32 in. I.D. x 1 5/8 in. O.D. x No. 10 gage	2	
				AUC-S-1960	WASHER, plain, S., special, 21/32 in. I.D. x 1 5/8 in. O.D. x No. 16 gage	2	

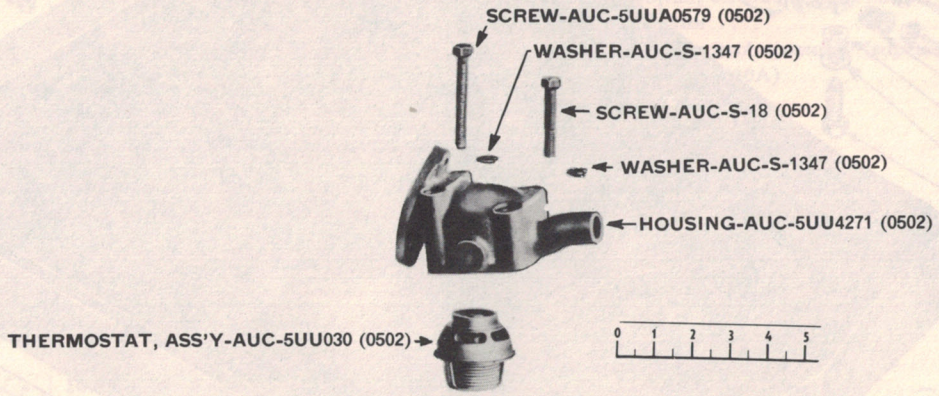

FIGURE 05-2 THERMOSTAT RA PD 346188

					0502 — THERMOSTAT		
				AUC-5UU0608	GASKET, thermostat (rubber) (HM-11407A) (use with THERMOSTAT, w/rubber GASKET, assembly, AUC-5UU030, only)	1	
		01-7, 05-6		AUC-5UU0272	GASKET, thermostat housing (HM-80771A) (part of GASKET SETS, AUC-2UU01200B and AUC-2UU01390A)	1	
		01-1, 2, 05-2, 6		AUC-5UU4271	HOUSING, thermostat (HM-17904C)	1	
H-1	H001-1013038	05-2, 6	217025	AUC-S-18	SCREW, cap, hex-hd., S., 3/8-16NC-2 x 2 1/2 (supersedes SCREW, AUC-5UU0579)	2	

	4300-1911A	05-2, 6		AUC-5UUA0579	SCREW, cap, hex-hd., S., 3/8-16NC-2 x 3 1/8 (HM-1911A)	2
H-1	H001-1518009	05-2, 6	103321	AUC-S-1347	WASHER, lock, reg., S., 3/8 in.	4
	4300-14885A			AUC-5UU0579	SCREW, cap, hex-hd., S., 3/8-16NC-2 x 2 3/8 (thermostat housing) (HM-14885A) (superseded by SCREW, AUC-S-18)	2
	G067-3400095	05-2, 6		AUC-5UU030	THERMOSTAT, w/copper GASKET, assembly (HM 11770BS) (supersedes THERMOSTAT, w/rubber GASKET, assembly, AUC-5UU030)	1
	G067-3400095			AUC-5UU030	THERMOSTAT, w/rubber GASKET, assembly (HM-11770BS) (superseded by THERMOSTAT, w/copper GASKET, assembly, AUC-5UU030)	1

0503-1 — WATER PUMP

Note: WATER PUMP ASSEMBLY, AUC-5UU040 used on all cars up to and including car No. U-7144-T-A7013.

		05-3		AUC-5UU001	BODY, water pump (HM-15460C)	1
		05-3		AUC-5UU013	BUSHING, water pump body (HM-15465A) (part of KIT, repair, AUC-5UU0638)	1
		05-3		AUC-5UU087	BUSHING, water pump cover (HM-15464A) (part of KIT, repair, AUC-5UU0638)	1
		05-3		AUC-5UU002	COVER, water pump (HM-15461C)	1
H-1	H001-1013037	05-3	217024	AUC-S-40	SCREW, cap, hex-hd., S., 3/8-16NC-2 x 2 1/4	4
H-1	H001-1518009		103321	AUC-S-1347	WASHER, lock, reg., S., 3/8 in.	4
		05-3		AUC-5TH0238	CUP, grease, water pump (HM-749A)	2
		05-3		AUC-5UU0586	DISC, lead, water pump (HM-4309A)	1
	4300-15164A	05-3		AUC-5UU004	GASKET, water pump cover (HM-15164A) (part of KIT, repair, AUC-5UU0638)	1
		05-3		AUC-5UU081	GLAND, water pump (HM-16911A) (part of KIT, repair, AUC-5UU0638)	1
		05-3		AUC-5UU003	IMPELLER, water pump (HM-15165A) (part of KIT, repair, AUC-5UU0638)	1
H-1	H001-0518017	05-3	103906	AUC-S-2308	KEY, Woodruff, S., 5/32 x 3/4 (No. 506) (part of KIT, repair, AUC-5UU0638)	1
				AUC-5UU0638	KIT, repair, water pump (HM-17998AS)	1
					(Composed of:	
				AUC-5UU013	1 BUSHING, body	
				AUC-5UU087	1 BUSHING, cover	
				AUC-5UU004	1 GASKET, cover	
				AUC-2UU0625	1 GASKET, drive shaft sleeve	
				AUC-5UU081	1 GLAND	
				AUC-5UU003	1 IMPELLER	
				AUC-S-2308	1 KEY, impeller	
				AUC-5UU0209	1 PACKING	
				AUC-5UU0598	1 PIN, coupling	
				AUC-5UU012	1 SHAFT	
				AUC-5UU0392	2 WASHER, packing)	
				AUC-5UUB032	LOCK, water pump packing nut (HM-17106A)	1

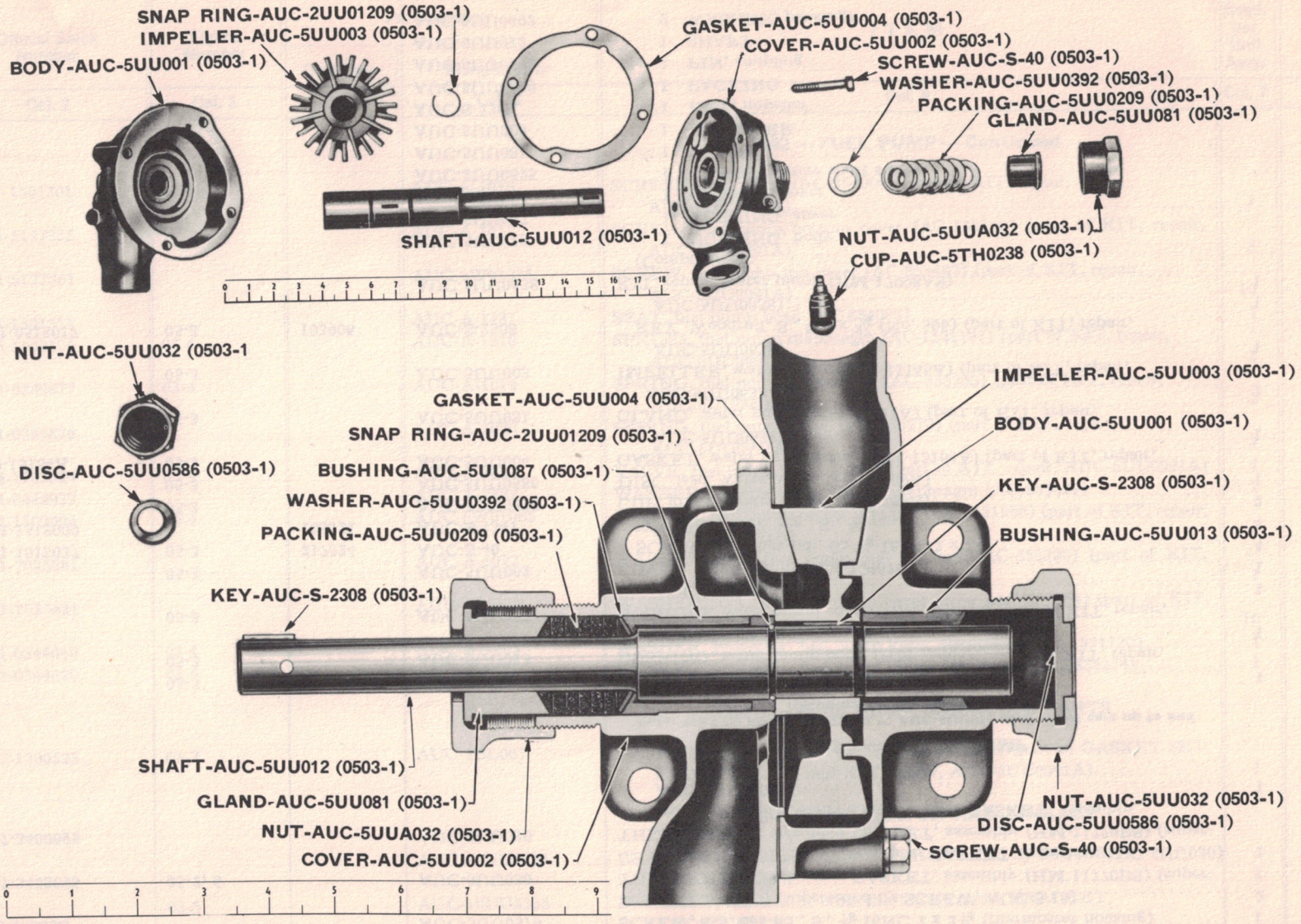

FIGURE 05-3 WATER PUMP RA PD 346189

Note Symbol	Official Stock Number	Figure Number	Part Number		ITEM	Quan. Reqd. per Unit Assy.	Unit Price
			Ordnance	Manufacturer			
Col. 1	Col. 2	Col. 3	Col. 4	Col. 5	Col. 6	Col. 7	Col. 8
					0503-1 — WATER PUMP — Continued		
		05-3		AUC-5UUA032	NUT, packing, water pump, L.H. (HM-15466A)	1	
		05-3		AUC-5UU032	NUT, packing, water pump, R.H. (HM-15824A)	1	
	G510-0333646	05-3		AUC-5UU0209	PACKING, water pump (HM-16913A) (part of KIT, repair, AUC-5UU0638)	1	
	G120-0155690			AUC-2UU01373	PIN, dowel, water pump (HM-2210A)	2	
H-6	H006-0283405		103873	AUC-S-4005	PLUG, pipe, C.I., std., ck., black, 3/8 in. (HM-61A) (water pump drain)	1	
	G510-0345876			AUC-5UU040	PUMP, water, assembly (HM-16859DS) (superseded by PUMP, assembly, AUC-5UUA040)	1	
H-1	H001-1013071		217054	AUC-S-25	SCREW, cap, hex-hd., S., 1/2-13NC-2 x 1 1/4	4	
H-1	H001-1518011		103323	AUC-S-1349	WASHER, lock, reg., S., 1/2 in.	4	
		05-3		AUC-5UU012	SHAFT, water pump (HM-16910B) (part of KIT, repair, AUC-5UU0638)	1	
		05-3		AUC-2UU01209	SNAP RING, water pump shaft (HM-15166A)	1	
		05-3		AUC-5UU0392	WASHER, water pump packing (HM-1149A) (part of KIT, repair, AUC-5UU0638)	1	
					0503-2 — WATER PUMP		
					Note: WATER PUMP ASSEMBLY (Packless) AUC-5UUA040, used on all cars from Serial No. U-7144-T-A7014 and up.		
H-12	H012-1411025	05-4		AUC-5UUB0137	BEARING, ball, annular, single row, w/single OIL SHIELD (ND-WC-8605) (water pump shaft)	1	
	7830-C-113819	05-4		AUC-5UUA0137	BEARING, roller, water pump shaft (MG-MO-18-M1-14)	1	
		05-4		AUC-5UUA001	BODY, water pump (SZ-L-113812)	1	
		05-4		AUC-5UUA002	COVER, water pump (SZ-A-113813)	1	
H-1	H001-1013037	05-4	217024	AUC-S-40	SCREW, cap, hex-hd., S., 3/8-16NC-2 x 2 1/4	4	
H-1	H001-1518009	05-4	103321	AUC-S-1347	WASHER, lock, reg., S., 3/8 in.	4	
	F005-0103580	05-4		AUC-5TH0238	CUP, grease, water pump (SZ-C-15375)	1	
H-6	H106-0192750	05-4	192750	AUC-5UUA0222	ELBOW, street, br., 45 deg., 1/8 in. (water pump grease cup)	1	
		07-1, 05-4		AUC-5UUA004	GASKET, water pump cover (SZ-C-113816) (part of GASKET SET, AUC-2UU01200B and KIT, repair, AUC-5UUB0638)	1	
		05-4		AUC-5UUA0426	GUIDE, spring, water pump impeller seal (SZ-C-106356) (part of KIT, repair, AUC-5UUB0638)	1	
	7830-B-113814	05-4		AUC-5UUA003	IMPELLER, water pump (SZ-B-113814)	1	
		05-4		AUC-5UUA0669	PIN, groove, 3/16 x 2, Type No. 1 (SZ-C-111824) (part of KIT, repair, AUC-5UUB0638)	1	

Note Symbol	Official Stock Number	Figure Number	Part Number		ITEM	Quan. Reqd. per Unit Assy.	Unit Price
			Ordnance	Manufacturer			
Col. 1	Col. 2	Col. 3	Col. 4	Col. 5	Col. 6	Col. 7	Col. 8
					0503-2 — WATER PUMP — Continued		
	0600-5UUB0638			AUC-5UUB0638	KIT, repair, water pump	1	
					(Composed of:		
				AUC-5UUA004	1 GASKET		
				AUC-5UUA0426	1 GUIDE		
				AUC-5UUA0669	1 PIN		
				AUC-5UUA0428	1 RING		
				AUC-5UUA0425	1 SEAL		
				AUC-5UUA0429	1 SNAP WIRE		
				AUC-5UUA0427	1 SPRING		
				AUC-5UUA0424	1 WASHER)		
	7830-C-16276	05-4		AUC-5UUA0673	NUT, lock, water pump bearing (SZ-C-16276)	1	
	G510-7033646	05-4		AUC-5UUA0674	OIL SEAL, water pump (SZ-C-113817)	1	
H-6	H006-0283405	05-4	103873	AUC-S-4005	PLUG, pipe, C.I., std., ck., black, 3/8 in. (water pump cover)	1	
H-6	H006-0283415	05-4	103875	AUC-S-617	PLUG, pipe, C.I., std., ck., black, 3/4 in. (water pump cover)	1	
H-6	H006-0283989	05-4	103883	AUC-S-4745	PLUG, pipe, slotted-hd., S., glvd., 1/8 in. (water pump drain)	1	
	7830-A-113811	01-2		AUC-5UUA040	PUMP, water, assembly (SZ-A-113811) (supersedes PUMP, assembly, AUC-5UU040)	1	
	G120-0155690			AUC-2UU01373	PIN, dowel, water pump mounting (HM-2210A)	2	
H-1	H001-1013071		217054	AUC-S-25	SCREW, cap, hex-hd., S., 1/2-13NC-2 x 1 1/4	4	
H-1	H001-1518011		103323	AUC-S-1349	WASHER, lock, reg., S., 1/2 in.	4	
	7830-C-111570	05-4		AUC-5UUA0264	RETAINER, water pump bearing shoulder ring (SZ-C-111570)	1	
	G067-1500260	05-4		AUC-5UUB0264	RETAINER, water pump seal (SZ-C-113818)	1	
	G156-0369904	05-4		AUC-5UUA0428	RING, clamp, water pump impeller seal (SZ-C-101450) (part of KIT, repair, AUC-5UUB0638)	1	
	7830-C-111569	05-4		AUC-5UUA0653	RING, shoulder water pump bearing (SZ-C-111569)	2	
		05-4		AUC-5UUA0425	SEAL, flexible, water pump impeller (SZ-C-106357) (part of KIT, repair, AUC-5UUB0638)	1	
				AUC-5UUA0378	SEAL, water pump impeller, assembly (SZ-C-106649)	1	
					(Composed of:		
				AUC-5UUA0426	1 GUIDE, spring		
				AUC-5UUA0428	1 RING, clamp		
				AUC-5UUA0425	1 SEAL, flexible		
				AUC-5UUA0429	1 SNAP WIRE		
				AUC-5UUA0427	1 SPRING		
				AUC-5UUA0424	1 WASHER)		
		05-4		AUC-5UUA0671	SEAL, water pump shaft (SZ-C-101122)	1	
	G510-7033353	05-4		AUC-5UUB012	SHAFT, water pump (SZ-B-113815)	1	

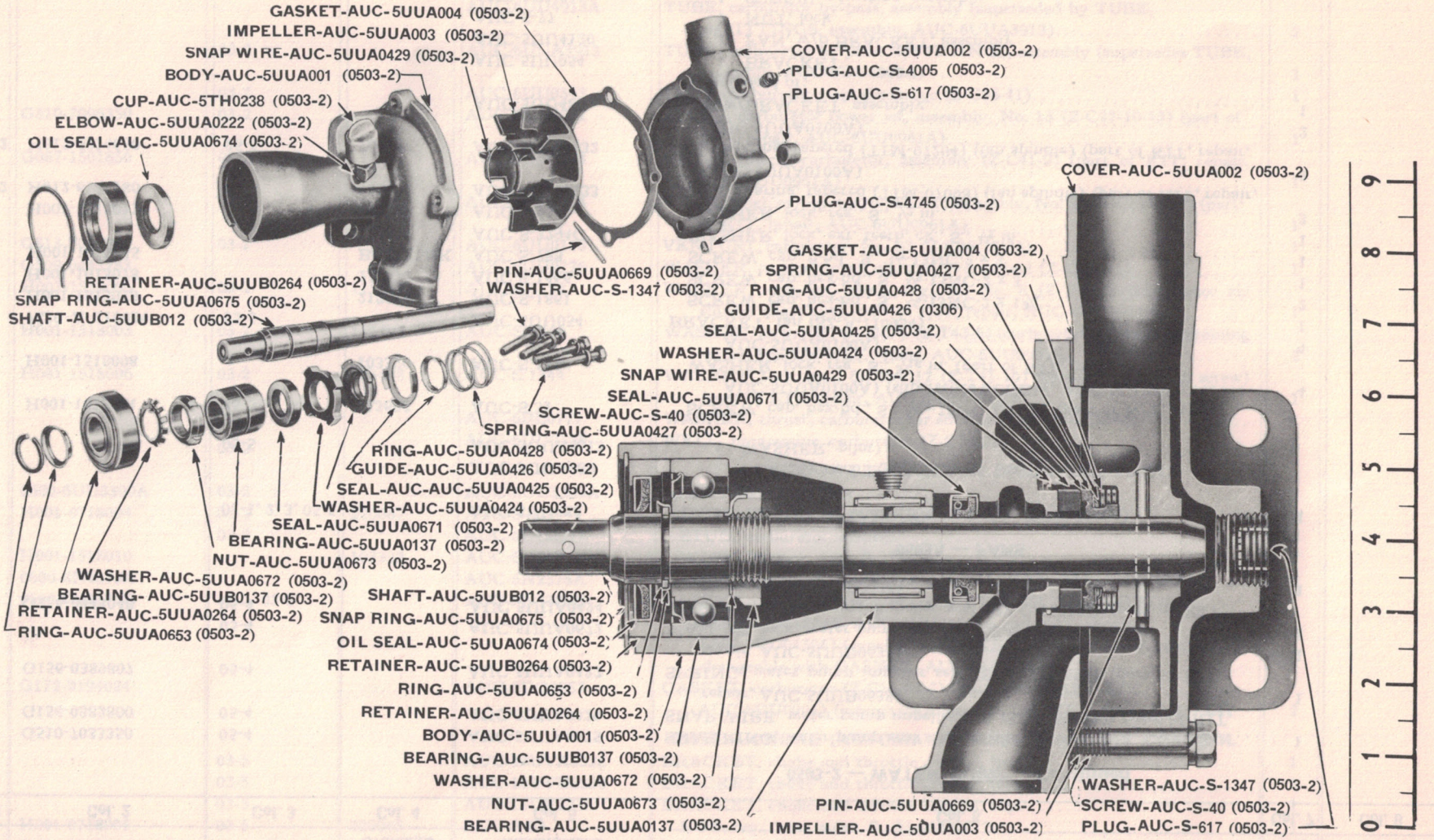

FIGURE 05-4 WATER PUMP (PACKLESS) RA PD 346190

Note Symbol	Official Stock Number	Figure Number	Part Number		ITEM	Quan. Reqd. per Unit Assy.	Unit Price
			Ordnance	Manufacturer			
Col. 1	Col. 2	Col. 3	Col. 4	Col. 5	Col. 6	Col. 7	Col. 8
					0503-2 — WATER PUMP — Continued		
	G510-7033350	05-4		AUC-5UUA0675	SNAP RING, water pump seal retainer (SZ-C-104960)	1	
	G156-0382800	05-4		AUC-5UUA0429	SNAP WIRE, water pump impeller seal (SZ-C-103940) (part of KIT, repair, AUC-5UUB0638)	1	
	G156-0389807	05-4		AUC-5UUA0427	SPRING, water pump impeller seal (SZ-C-101449S) (part of KIT, repair, AUC-5UUB0638)	1	
		05-4		AUC-5UUA0672	WASHER, lock, water pump bearing (SZ-C-16277)	1	
	G156-0443048	05-4		AUC-5UUA0424	WASHER, water pump impeller seal (SZ-C-112303) (part of KIT, repair, AUC-5UUB0638)	1	
					0503A — FANS		
		01-1, 2, 3, 05-5		AUC-5UU088	BLADE, fan, w/pilot WASHER, assembly (SZ-F-07464)	1	
					(Composed of:		
				AUC-5UUA088	1 BLADE, assembly		
		05-5		AUC-5UUA2613	1 WASHER, pilot)		
H-1	H001-1013021	05-5	213698	AUC-S-31	SCREW, cap, hex-hd., S., $\frac{5}{16}$-18NC-2 x $1\frac{1}{2}$ (part of KIT, repair, AUC-5UUA0100A) (supersedes SCREW, AUC-5UU007)	4	
H-1	H001-1518008		103320	AUC-S-1346	WASHER, lock, reg., S., $\frac{5}{16}$ in. (part of KIT, repair, AUC-5UUA0100A)	4	
	7830-A-110934	05-5		AUC-5UU054	BRACKET, fan (SZ-A-110934)	1	
H-1	H001-1013073		217056	AUC-S-1861	SCREW, cap, hex-hd., S., $\frac{1}{2}$-13NC-2 x $1\frac{3}{4}$	2	
H-1	H001-1013078		217077	AUC-S-1466	SCREW, cap, hex-hd., S., $\frac{1}{2}$-13NC-2 x 3	1	
H-1	H001-1012045		BCDX1BK	AUC-S-788	SCREW, cap, fl-hd., S., $\frac{1}{2}$-13NC-2 x 3	1	
			114620	AUC-S-3294C	WASHER, lock, ext. teeth, ck., S., $\frac{1}{2}$ in.	1	
H-1	H001-1518011		103323	AUC-S-1349	WASHER, lock, reg., S., $\frac{1}{2}$ in.	3	
H-12	H012-6131180	05-5	705371	AUC-5DW0133	CONE, bearing, tapered (TIM-07098) (fan spindle) (part of KIT, repair, AUC-5UUA0100A)	2	
H-12	H012-6214650	05-5	706797	AUC-5DW0132	CUP, bearing, tapered (TIM-07204) (fan spindle) (part of KIT, repair, AUC-5UUA0100A)	2	
				AUC-5UU480	FAN, w/BRACKET, assembly	1	
					(Composed of:		
				AUC-5UU054	1 BRACKET		
				AUC-5UU4120	1 FAN, w/o BRACKET, assembly		
				AUC-S-77	1 NUT, lock		
				AUC-5UU0171	1 SCREW, adjusting, assembly		
				AUC-S-1349	1 WASHER, lock)		
H-1	H001-1013073		217056	AUC-S-1861	SCREW, cap, hex-hd., S., $\frac{1}{2}$-13NC-2 x $1\frac{3}{4}$	2	

H-1	H001-1013078		217077	AUC-S-1466	SCREW, cap, hex-hd., S., ½-13NC-2 x 3	1
H-1	H001-1012045		BCDX1BK	AUC-S-788	SCREW, cap, fl-hd., S., ½-13NC-2 x 3	1
			114620	AUC-S-3294C	WASHER, lock, ext. teeth, ck., S., ½ in.	1
H-1	H001-1518011		103323	AUC-S-1349	WASHER, lock, reg., S., ½ in.	3
	0600-5UU4120			AUC-5UU4120	FAN, w/o BRACKET, assembly	1
					(Composed of:	
				AUC-5UU088	1 BLADE, w/WASHER, assembly	
				AUC-5UU0666	1 HUB, assembly	
				AUC-5UUA2262A	1 SPACER, fan)	
H-2	H002-0504208	05-5	504208	AUC-S-8353C	FITTING, lubricating, push type, stght., ⅛-27NPT, male, short	1
				AUC-5UU0666	HUB, fan, w/SPINDLE, assembly	1
		05-5		AUC-5UU049	HUB and PULLEY, fan (SZ-B-111546)	1
		01-7, 05-5		AUC-5CB0242	GASKET, fan bearing (SZ-C-7067) (part of GASKET SET, AUC-2UU01200B and KIT, repair, AUC-5UUA0100A)	1
	7830-C-9095	01-7, 05-5		AUC-5UU0242	GASKET, fan hub (SZ-C-9095) (part of GASKET SET, AUC-2UU01200B and KIT, repair, AUC-5UUA0100A)	1
		05-5		AUC-5UU222	GASKET, fan spacer	1
	0600-5UUA0100			AUC-5UUA0100	KIT, repair, fan (SZ-114274) (superseded by KIT, repair, AUC-5UUA0100A)	1
					(Composed of:	
				AUC-5CB0242	1 GASKET, fan bearing	
				AUC-5UU0242	2 GASKET, fan hub	
				AUC-S-2199	1 PIN, cotter	
				AUC-5T053	1 RETAINER, fan bearing	
				AUC-5T074	1 WASHER, cork, fan bearing	
				AUC-5T073	1 WASHER, retaining	
				AUC-5TL072	1 WASHER, retaining)	
	0600-5UUA0100A			AUC-5UUA0100A	KIT, repair, fan (supersedes KIT, repair, AUC-5UUA0100)	1
					(Composed of:	
				AUC-5DW0133	2 CONE, bearing	
				AUC-5DW0132	2 CUP, bearing	
				AUC-5CB0242	1 GASKET, fan bearing	
				AUC-5UU0242	2 GASKET, fan hub	
				AUC-S-2199	1 PIN, cotter	
				AUC-5T053	1 RETAINER, fan bearing	
				AUC-S-31	4 SCREW, cap	
				AUC-5T074	1 WASHER, cork, fan bearing	
				AUC-S-1346	4 WASHER, lock	
				AUC-5T073	1 WASHER, retaining	
				AUC-5TL072	1 WASHER, retaining	
				AUC-5SCM071	1 WIRE, lock)	
		05-5		AUC-5UUA0192	NUT, clamp, fan spindle, rear (SZ-C-110377) (superseded by NUT, AUC-S-2001)	1
H-1	H001-0718005		220068	AUC-5UU0192	NUT, fan adjusting screw (SZ-C-4913) (superseded by NUT, AUC-S-77)	1
		05-5		AUC-5SCM047	NUT, fan spindle, front (SZ-C-2750)	1

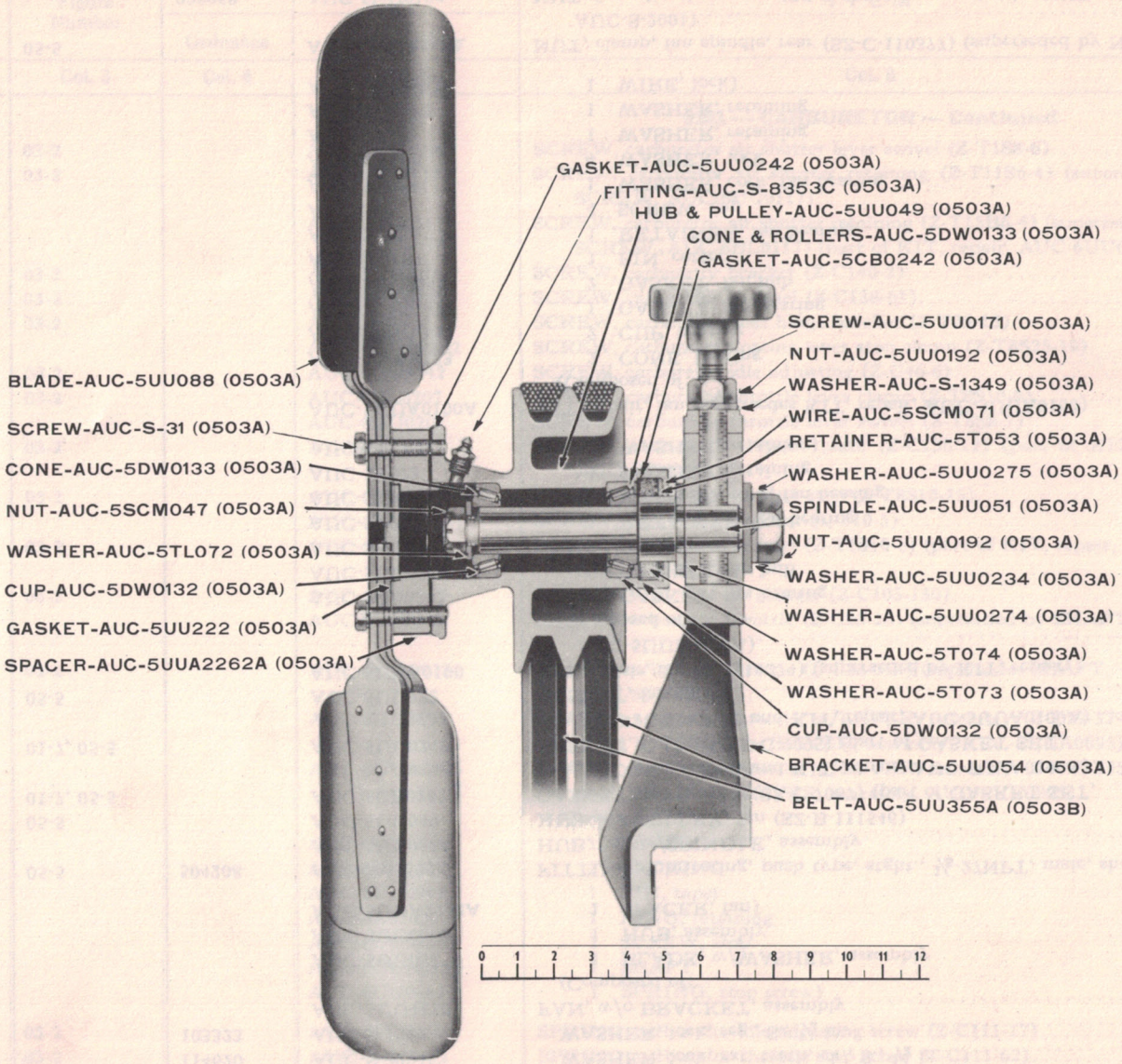

FIGURE 05-5

FAN

RA PD 346191

Note Symbol	Official Stock Number	Figure Number	Part Number		ITEM	Quan. Reqd. per Unit Assy.	Unit Price
			Ordnance	Manufacturer			
Col. 1	Col. 2	Col. 3	Col. 4	Col. 5	Col. 6	Col. 7	Col. 8
					0503A — FANS — Continued		
				AUC-S-2001	NUT, jam, heavy, hex., s-fin., S., 3/4-16NF-2 (SZ-C-115316) (fan spindle, rear) (superseded by NUT, AUC-5UUB0192)	1	
H-1	H001-0725710		503334	AUC-5UUB0192	NUT, safety, S., plain, 3/4-16NF-3 (fan spindle, rear) (supersedes NUT, AUC-S-2001 and WASHER, AUC-5UU0234)	1	
H-1	H001-0811040		103374	AUC-S-2199	PIN, cotter, split, S., 3/32 x 1 (fan spindle) (part of KIT, repair, AUC-5UUA0100A)	1	
		05-5		AUC-5T053	RETAINER, cork, fan bearing (SZ-C-6060) (part of KIT, repair, AUC-5UUA0100A)	1	
		01-1, 2, 05-5		AUC-5UU0171	SCREW, adjusting, fan, assembly (SZ-C-112601)	1	
H-1	H001-0718005		220068	AUC-S-77	NUT, reg., hex., s-fin., S., 1/2-13NC-2 (supersedes NUT, AUC-5UU0192)	1	
H-1	H001-1518011	05-5	103323	AUC-S-1349	WASHER, lock, reg., S., 1/2 in.	1	
				AUC-5UU007	SCREW, fan blade (SZ-C-3806) (superseded by SCREW, AUC-S-31)	4	
		05-5		AUC-5UUA2262A	SPACER, fan	1	
		05-5		AUC-5UU051	SPINDLE, fan (SZ-C-111844)	1	
	7830-114002			AUC-5UU0644	SPINDLE, fan, w/NUTS, assembly (SZ-114002) (Composed of:	1	
				AUC-5SCM047	1 NUT, spindle, front		
				AUC-S-2001	1 NUT, spindle, rear		
				AUC-5UU051	1 SPINDLE)		
				AUC-5SA0274	WASHER, clamp, fan bracket, front (SZ-C-2662) (superseded by WASHER, AUC-5UU0274)	1	
		05-5		AUC-5UU0274	WASHER, clamp, fan bracket, front (SZ-C-115397) (supersedes WASHER, AUC-5SA0274)	1	
				AUC-5SA0275	WASHER, clamp, fan bracket, rear (SZ-C-113013) (superseded by WASHER, AUC-5UU0275)	1	
		05-5		AUC-5UU0275	WASHER, clamp, fan bracket, rear (SZ-C-115396) (supersedes WASHER, AUC-5SA0275)	1	
		05-5		AUC-5T074	WASHER, cork, fan bearing (SZ-C-6062) (part of KIT, repair, AUC-5UUA0100A)	1	
		05-5		AUC-5UU0234	WASHER, lock, fan bearing clamp nut (SZ-C-11607) (used with NUT, AUC-S-2001 only)	1	
		05-5		AUC-5T073	WASHER, retaining, fan bearing cork (SZ-C-6061) (part of KIT, repair, AUC-5UUA0100A)	1	
		05-5		AUC-5TL072	WASHER, retaining, fan spindle bearing, front (SZ-C-17065) (part of KIT, repair, AUC-5UUA0100A)	1	
		05-5		AUC-5SCM071	WIRE, lock, fan bearing cork retainer (SZ-C-5098) (part of KIT, repair, AUC-5UUA0100A)	1	

Note Symbol	Official Stock Number	Figure Number	Part Number		ITEM	Quan. Reqd. per Unit Assy.	Unit Price
			Ordnance	Manufacturer			
Col. 1	Col. 2	Col. 3	Col. 4	Col. 5	Col. 6	Col. 7	Col. 8
					0503B — FAN AND GENERATOR BELTS		
	G510-0118254			AUC-5UU355	BELT, fan and compressor (GLH-8515) (superseded by BELT, AUC-5UU355A)	2	
	0600-5UU355A	01-1, 3, 05-5		AUC-5UU355A	BELT, fan and compressor (GLH-8515NP) (supersedes BELT, AUC-5UU355)	2	
					0504 — RADIATOR MOUNTINGS		
				AUC-5UU3104	BRACKET, radiator support, bottom (superseded by BRACKET AUC-5UUA3104)	2	
		05-1		AUC-5UUA3104	BRACKET, radiator support, bottom (supersedes BRACKET, AUC-5UU3104)	2	
H-1	H001-0718005	05-1	220068	AUC-S-77	NUT, reg., hex., s-fin., S., ½-13NC-2	4	
H-1	H001-1013072	05-1	217055	AUC-S-1872	SCREW, cap, hex-hd., S., ½-13NC-2 x 1½	4	
H-1	H001-1518011	05-1	103323	AUC-S-1349	WASHER, lock, reg., S., ½ in.	8	
		05-1		AUC-5UKS2582	BRACKET, radiator support, top	1	
		05-1		AUC-5UKS2597	CUSHION, radiator support, felt	2	
H-1	H001-0722003	05-1	218483	AUC-S-4197	NUT, slotted, heavy, S., ⅜-16NC-2	1	
H-1	H001-4217680	05-1	102647	AUC-S-4205	NUT, slotted, light, S., ½-20NF-2	1	
H-1	H001-0811040	05-1	103374	AUC-S-2199	PIN, cotter, split, S., 3/32 x 1	1	
H-1	H001-0811052	05-1	103385	AUC-S-2204	PIN, cotter, split, S., ⅛ x 1	1	
H-1	H001-1014009	05-1	220690	AUC-S-4068	SCREW, cap, hex-hd., S., dld. f/c-pin, ⅜-16NC-2 x 1¾	1	
		05-1		AUC-5NL2375	SPRING, radiator support	1	
		05-1		AUC-5UKS2389	STUD, radiator support	1	
		05-1	BEAX8AK	AUC-S-3300C	WASHER, lock, int-ext. teeth, reg., S., ⅜ x 1.245	1	
		05-1		AUC-S-722	WASHER, plain, S., special, 13/32 in. I.D. x 15/32 in. O.D. x 1/16 in. thick	4	
H-1	H001-7048660	05-1	502237	AUC-S-995	WASHER, plain, S., special, 17/32 in. I.D. x 1 in. O.D. x No. 16 gage	1	
		05-1		AUC-5UKS2374	SUPPORT, radiator top	1	
		05-1		AUC-5UKS2597	CUSHION, radiator support, felt	2	
H-1	H001-0722003	05-1	218483	AUC-S-4197	NUT, slotted, heavy, S., ⅜-16NC-2	1	
H-1	H001-0811040	05-1	103374	AUC-S-2199	PIN, cotter, split, S., 3/32 x 1	1	
H-1	H001-1014009	05-1	220690	AUC-S-4068	SCREW, cap, hex-hd., S., dld. f/c-pin, ⅜-16NC-2 x 1¾	1	
		05-1		AUC-S-722	WASHER, plain, S., special, 13/32 in. I.D. x 15/32 in. O.D. x 1/16 in. thick	2	
				AUC-5UKS0720	SUPPORT, radiator, w/BRACKET, assembly (Composed of:	1	
				AUC-5UKS2582	1 BRACKET, top (with mounting parts)		
				AUC-5UKS2374	1 SUPPORT, top (with mounting parts))		

H-6	H006-0210071		B6495B	AUC-S-4762	BUSHING, pipe, shoulder, C.I., std., glvd., 1/4 x 3/8 (water lines—compressor to manifold and pump)	3
H-6	H006-0312600		279854	AUC-25G944	CONNECTOR, compression tube, 3/8 in., 1/4 in. male pipe end (with nut and sleeve) (BWE-205053) (water lines—compressor to manifold and pump)	2
H-6	H006-0504255		504255	AUC-25G945	ELBOW, compression tube, 3/8 in., 1/4 in. male pipe end (with nut and sleeve) (BWE-205102) (water lines—compressor to manifold and pump)	2
	0600-5UU362	01-1, 2, 05-6		AUC-5UU362	ELBOW, engine water outlet	1
H-1	H001-1013033	05-6	213733	AUC-S-64	SCREW, cap, hex-hd., S., 3/8-16NC-2 x 1 1/4	2
H-1	H001-1518009	05-6	103321	AUC-S-1347	WASHER, lock, reg., S., 3/8 in.	2
H-6	H006-0265010		A159461	AUC-S-8026	ELBOW, street, br., 45 deg., 1/4 in. (WH-3350X4) (water lines—compressor to manifold and pump)	2
	0600-5UU3158A	05-6		AUC-5UU3158A	ELBOW, water pump inlet	1
H-1	H001-1013032	05-6	213729	AUC-S-23	SCREW, cap, hex-hd., S., 3/8-16NC-2 x 1	2
H-1	H001-1518009	05-6	103321	AUC-S-1347	WASHER, lock, reg., S., 3/8 in.	2
	G510-0194049	01-7, 05-6		AUC-S-1469	GASKET, engine water outlet elbow (part of GASKET SETS, AUC-2UU01200B and AUC-2UU01390A)	1
	4300-8179A	01-7, 05-6		AUC-5UU0607	GASKET, engine water outlet manifold (HM-8179A) (part of GASKET SETS, AUC-2UU01200B and AUC-2UU01390A)	2
	4300-15179B	01-7, 05-7		AUC-5UU094	GASKET, water pump discharge manifold (HM-15179B) (part of GASKET SETS, AUC-2UU01200B and AUC-2UU01390A)	1
	0600-S-4082	01-7, 05-6		AUC-S-4082	GASKET, water pump inlet elbow (part of GASKET SET, AUC-2UU01200B)	1
				AUC-S-2356	HOSE, radiator, rubber, 1 in. (1 1/2 in. O.D.) (superseded by HOSE, W-2777 and required length)	2
				AUC-S-2392	CLAMP, hose, 1 1/2 in. (superseded by CLAMP, AUC-W-7607)	4
		01-2, 05-6		AUC-W-2777-3	HOSE, radiator, rubber, 1 in. (1 1/2 in. O.D. x 3 in. long) (water pump by-pass) (supersedes HOSE, AUC-S-2356)	2
H-6	H006-0210918	05-6	B259545H	AUC-W-7607	CLAMP, hose, 1 1/2 in. (1 1/4–1 1/2 in. cap., with thumb screw) (UTS-AAC-5036-Z) (supersedes CLAMP, AUC-S-2392)	4
	G510-0217817			AUC-S-2372	HOSE, radiator, rubber, 1 3/4 in. (2 1/4 in. O.D.) (superseded by HOSE, W-2779 and required length)	4
				AUC-S-2398	CLAMP, hose, 2 1/4 in. (superseded by CLAMP, AUC-W-7602)	8
		05-6		AUC-W-2779-4	HOSE, radiator, rubber, 1 3/4 in. (2 1/4 in. O.D. x 4 in. long) (radiator outlet) (supersedes HOSE, AUC-S-2372)	2
	G102-7005733	05-6	500612	AUC-W-7602	CLAMP, hose, 2 1/4 in. (2-2 1/4 in. cap., with thumb screw) (UTS-AAC-5263-Z) (supersedes CLAMP, AUC-S-2398)	4
		01-3, 05-6		AUC-W-2779-5-1/8	HOSE, radiator, rubber, 1 3/4 in. (2 1/4 in. O.D. x 5 1/8 in. long) (water pump discharge) (supersedes HOSE, AUC-S-2372)	1
	G102-7005733	05-6	500612	AUC-W-7602	CLAMP, hose, 2 1/4 in. (2-2 1/4 in. cap., with thumb screw) (UTS-AAC-5263-Z) (supersedes CLAMP, AUC-S-2398)	2
		05-6		AUC-W-2779-9 1/2	HOSE, radiator, rubber, 1 3/4 in. (2 1/4 in. O.D. x 9 1/2 in. long) (engine water outlet) (supersedes HOSE, AUC-S-2372)	1

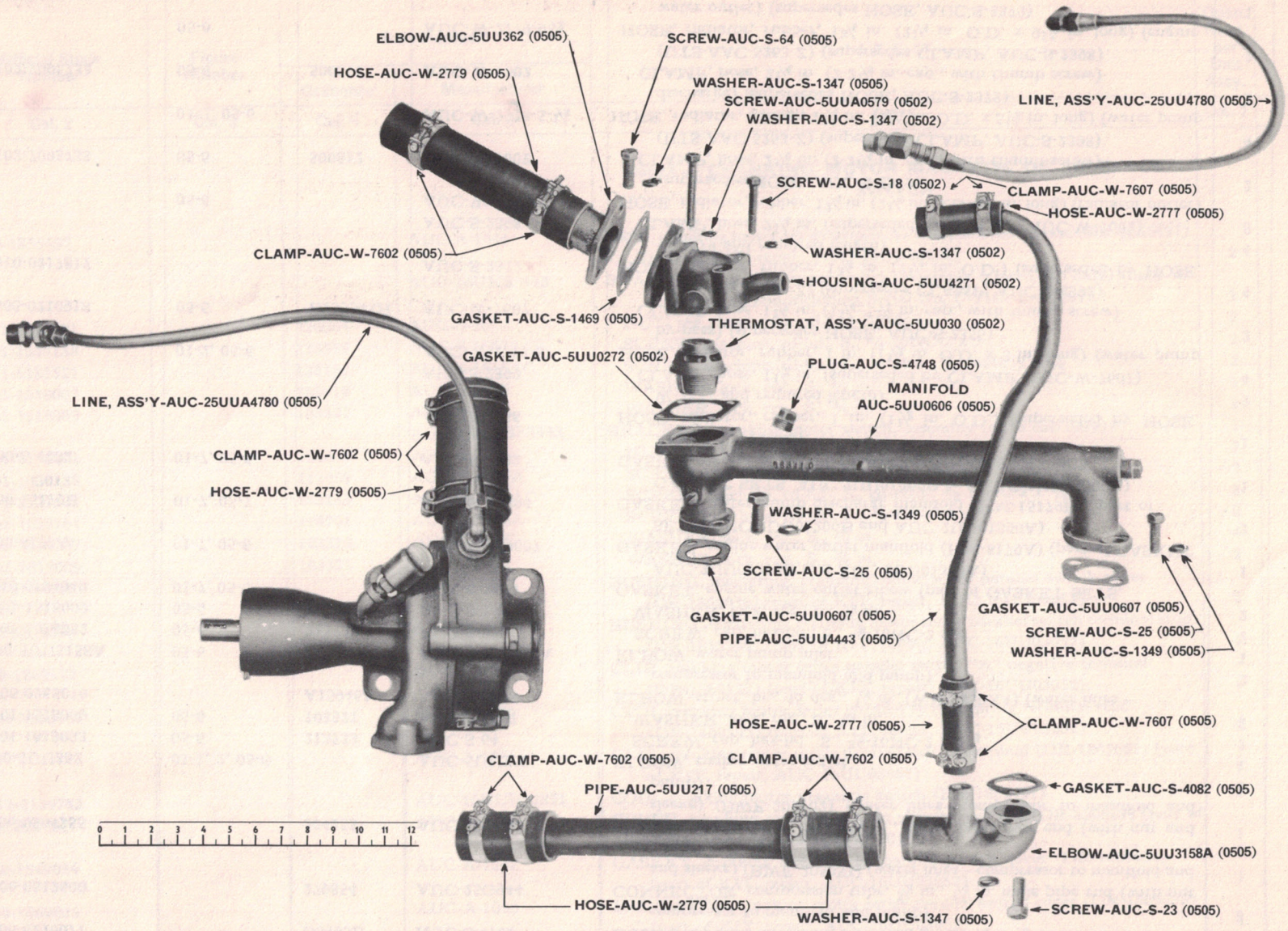

FIGURE 05-6 ENGINE WATER FITTINGS AND HOSE RA PD 346192

Note Symbol	Official Stock Number	Figure Number	Part Number		ITEM	Quan. Reqd. per Unit Assy.	Unit Price
			Ordnance	Manufacturer			
Col. 1	Col. 2	Col. 3	Col. 4	Col. 5	Col. 6	Col. 7	Col. 8
					0505 — ENGINE WATER FITTINGS AND HOSE — Continued		
	G102-7005733	05-6	500612	AUC-W-7602	CLAMP, hose, 2¼ in. (2-2¼ in. cap., with thumb screw) (UTS-AAC-5263-Z) (supersedes CLAMP, AUC-S-2398)	2	
		05-6		AUC-25UU4780	LINE, water, air compressor to water manifold, assembly	1	
				AUC-25UUA4362	LINE, water, water pump to air compressor	1	
		05-6		AUC-25UUA4780	LINE, water, water pump to air compressor, assembly	1	
	4300-17321C	01-1, 2, 05-6		AUC-5UU0606	MANIFOLD, engine water outlet (HM-17321C)	1	
H-1	H001-1013071	05-6	217054	AUC-S-25	SCREW, cap, hex-hd., S., ½-13NC-2 x 1¼	4	
H-1	H001-1518011	05-6	103323	AUC-S-1349	WASHER, lock, reg., S., ½ in.	4	
	4300-15178C	05-7		AUC-5UU0612	MANIFOLD, water pump discharge (HM-15178C)	1	
H-1	H001-1013016		193989	AUC-S-16	SCREW, cap, hex-hd., S., 5/16-18NC-2 x 5/8	20	
H-1	H001-1518008		103320	AUC-S-1346	WASHER, lock, reg., S., 5/16 in.	20	
	0600-5UU217	05-6		AUC-5UU217	PIPE, radiator outlet, 1¾ in. O.D. x 14⅞ in. long	1	
	0600-5UU4443	01-1, 2, 05-6		AUC-5UU4443	PIPE, water pump by-pass	1	
H-6	H006-0283985	05-6	A144588	AUC-S-4748	PLUG, pipe, slotted-hd., S., glvd., ¼ in. (engine water outlet manifold)	1	

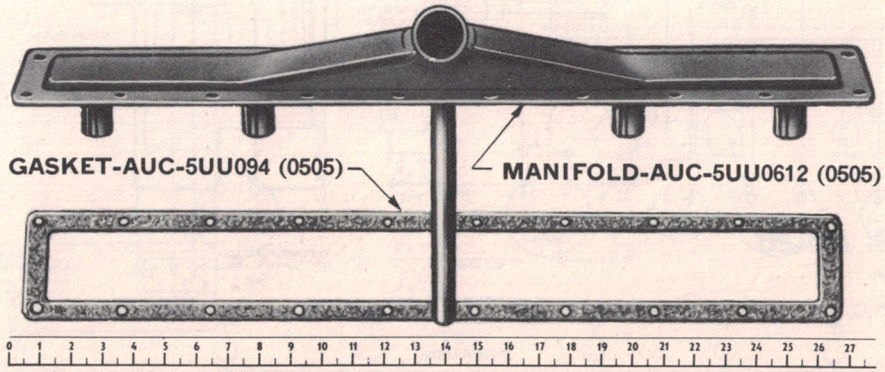

FIGURE 05-7 WATER PUMP DISCHARGE MANIFOLD RA PD 346193

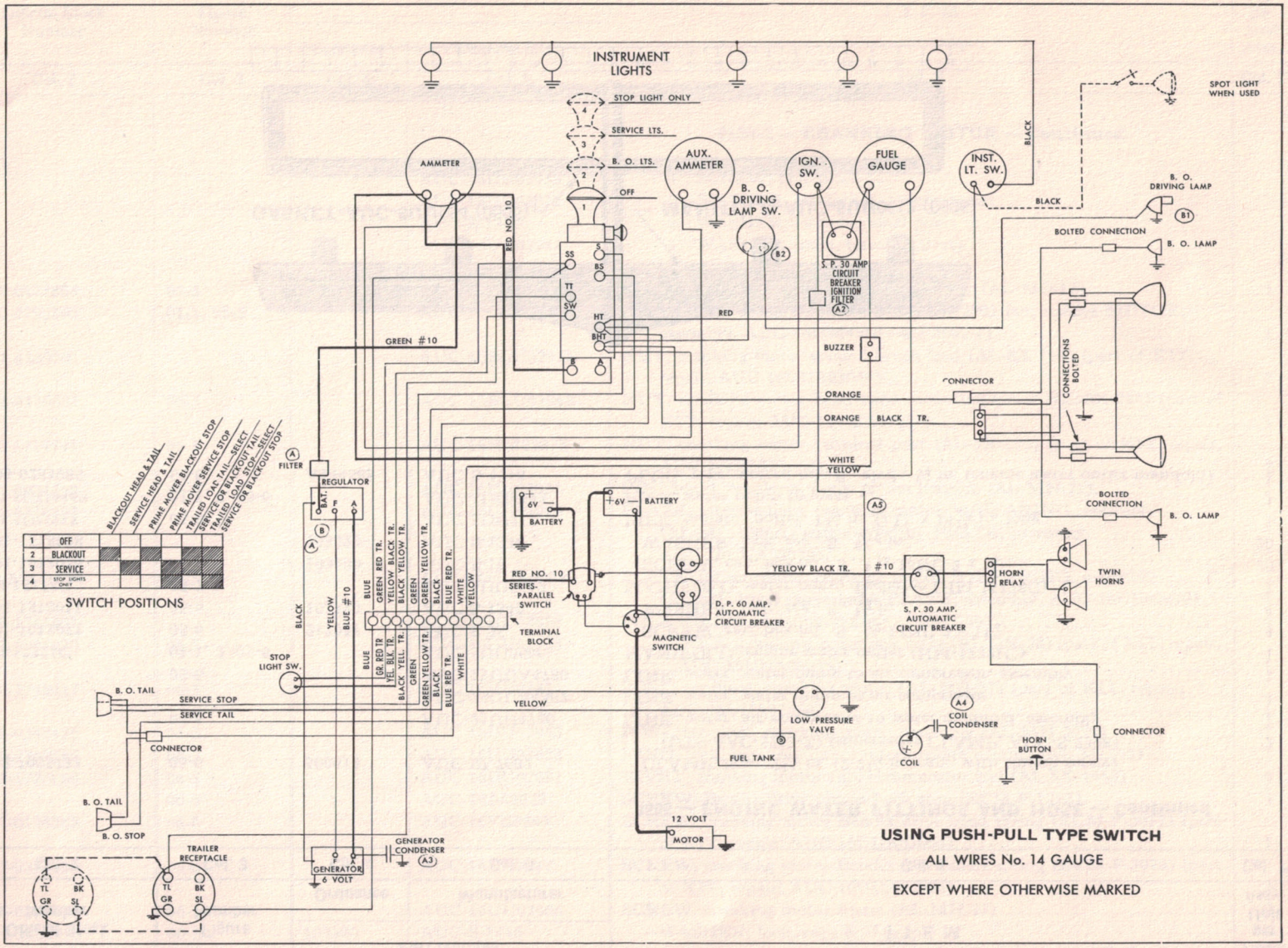

FIGURE 06-1 SCHEMATIC WIRING DIAGRAM RA PD 346194

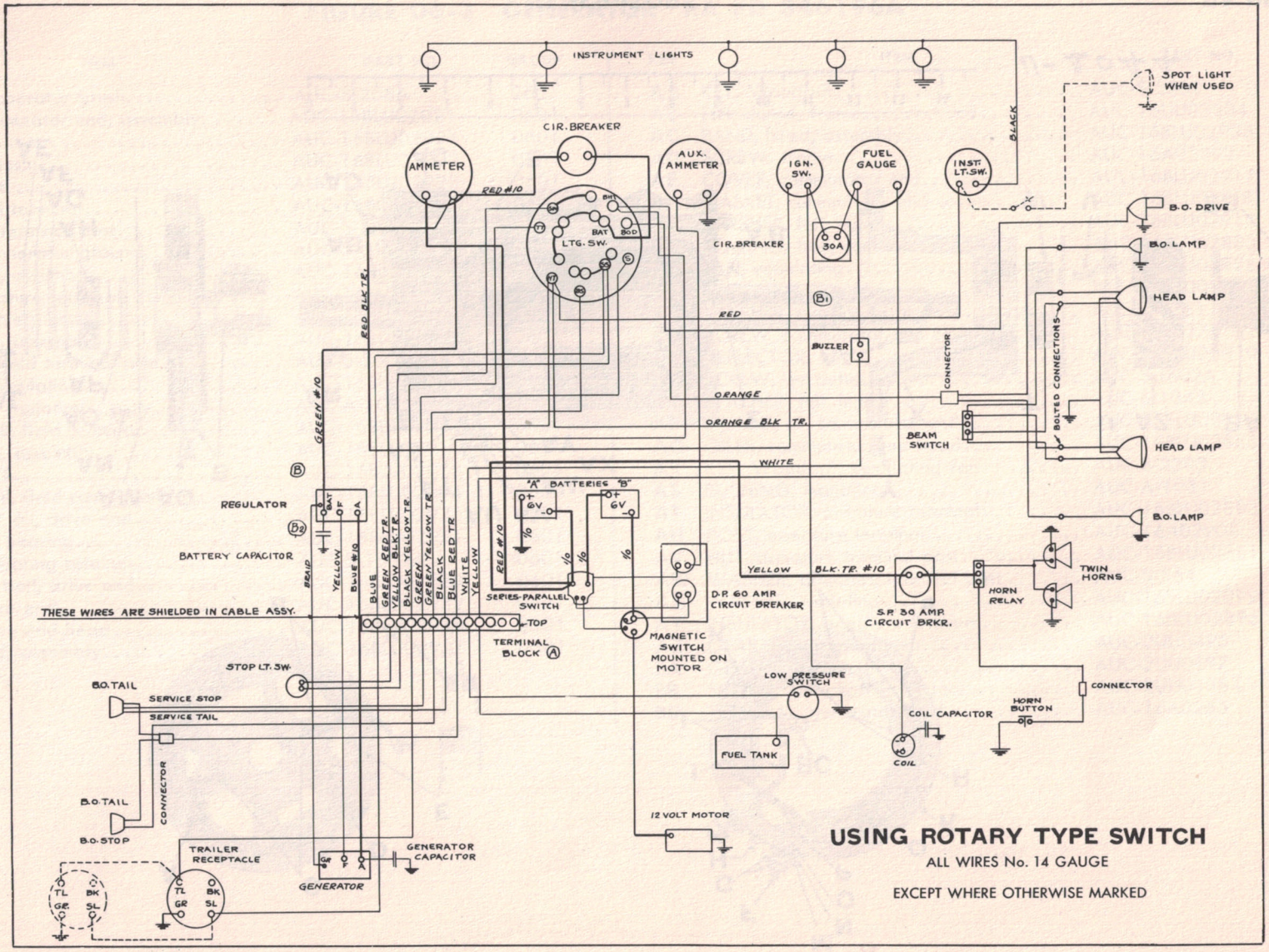

FIGURE 06-2 SCHEMATIC WIRING DIAGRAM RA PD 346195

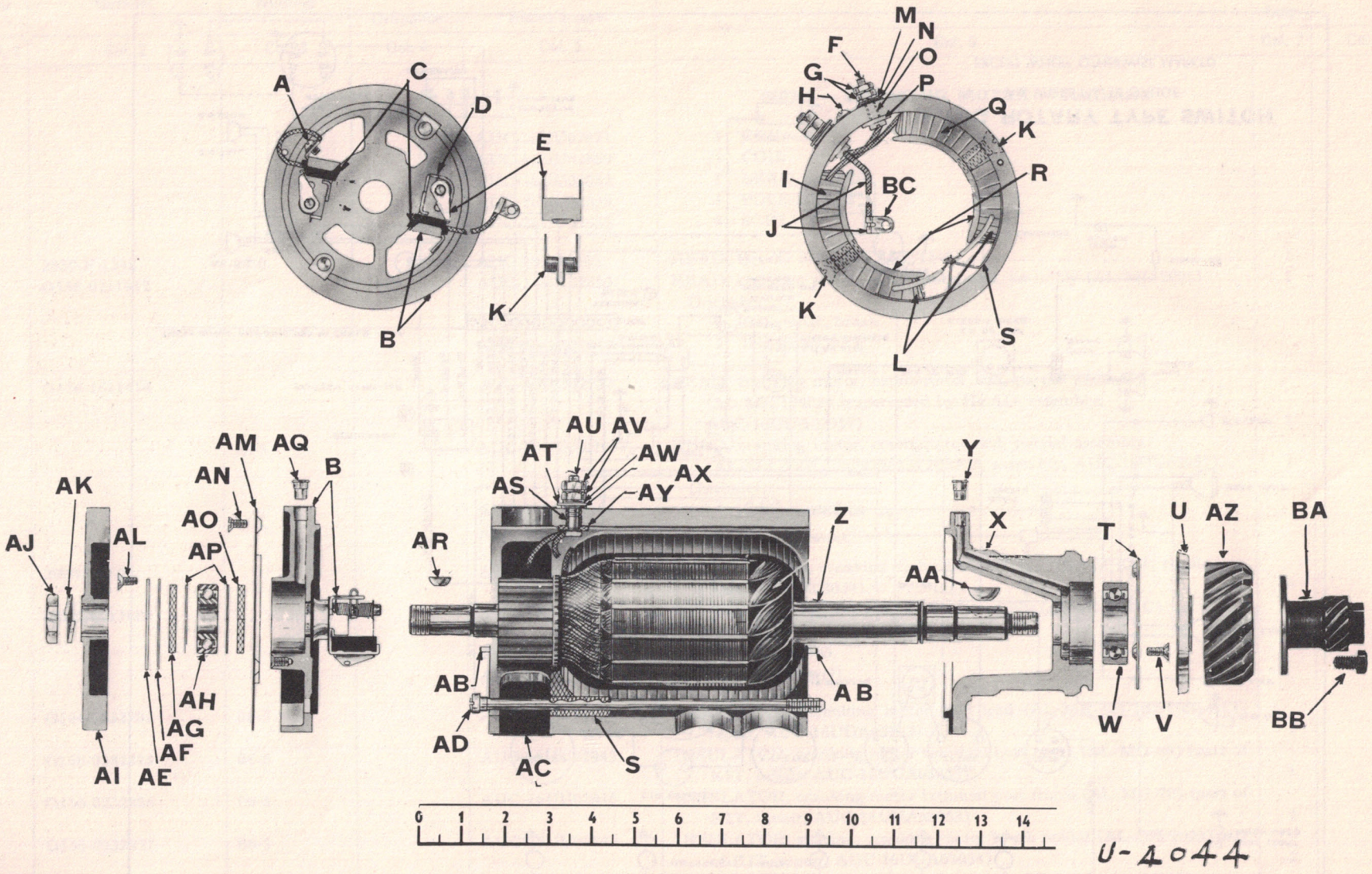

FIGURE 06-3 GENERATOR RA PD 346196

FIGURE 06-3 GENERATOR RA PD 346196A

KEY	ITEM	PART NO.	GROUP
A	SCREW, generator brush	AUC-S-208A	0601
B	HEAD, commutator end, assembly	AUC-16BLU02921	0601
C	BRUSH	AUC-16BLU02924	0601
D	SPRING, brush	AUC-16BLU02922	0601
E	ARM, brush	AUC-16BLU02923	0601
F	POST, field terminal	AUC-16B02908	0601
G	NUT, field terminal post	AUC-S-3745	0601
H	SCREW, generator ground	AUC-S-6127A	0601
I	COIL, field, assembly	AUC-16BLU02909	0601
J	LEAD, armature terminal, assembly	AUC-16BLU02906	0601
K	SCREW, pole piece	AUC-16BLU02898	0601
L	COIL, field, assembly	AUC-16BLU02904	0601
M	WASHER, field terminal post	AUC-S-350	0601
N	WASHER, insulating	AUC-16BLU02895	0601
O	BUSHING, insulating	AUC-A-1032	0601
P	INSULATOR, field terminal	AUC-16BLU02897	0601
Q	COIL, field, assembly	AUC-16BLU02911	0601
R	POLE PIECE	AUC-16BLU02903	0601
S	INSULATOR, field connection	AUC-16BLU02894	0601
T	THROWER, oil, drive end	AUC-16BLU02925	0601
U	RETAINER, bearing	AUC-16BLU02931	0601
V	SCREW, bearing retainer	AUC-S-1602A	0601
W	BEARING, ball, drive end	AUC-16BLU02889	0601
X	HEAD, drive end	AUC-16BLU02932	0601
Y	OILER, drive end head	AUC-16BLU02888	0601
Z	ARMATURE, assembly	AUC-16BLU02927	0601

KEY	ITEM	PART NO.	GROUP
AA	KEY, Woodruff	AUC-S-2308	0601
AB	PIN, dowel, frame	AUC-16UU03034	0601
AC	BAND, head, assembly	AUC-16BLU02933	0601
AD	SCREW, frame	AUC-16A02892	0601
AE	COVER, commutator end	AUC-16BLU02917	0601
AF	GASKET, commutator end cover	AUC-16BLU02918	0601
AG	WASHER, felt, outer	AUC-16BLU02915	0601
AH	BEARING, ball, commutator end	AUC-16BLU02883	0601
AI	FAN, ventilating	AUC-16BLU02928	0601
AJ	NUT, ventilating fan	AUC-16BLU02926	0601
AK	WASHER, ventilating fan	AUC-S-1351	0601
AL	SCREW, commutator end cover	AUC-A-1027	0601
AM	DEFLECTOR, air	AUC-16BLU02919	0601
AN	SCREW, air deflector	AUC-S-1602A	0601
AO	WASHER, felt, inner	AUC-S-1343	0601
AP	GUARD, oil, commutator end	AUC-16BLU02914	0601
AQ	OILER, commutator end head	AUC-16BLU02888	0601
AR	KEY, Woodruff, ventilating fan	AUC-S-2303	0601
AS	BUSHING, insulating	AUC-A-1031	0601
AT	INSULATOR, armature terminal	AUC-16BLU02893	0601
AU	POST, armature terminal	AUC-16A02908	0601
AV	NUT, armature terminal post	AUC-16BLU02881	0601
AW	WASHER, armature terminal post	AUC-S-364	0601
AX	WASHER, insulating	AUC-16BLU02899	0601
AY	INSULATOR, armature terminal	AUC-16BLU02896	0601
AZ	GEAR, generator driven	AUC-2UU0495	0601
BA	GEAR, governor drive	AUC-2UU0197	0305
BB	SCREW, governor drive gear	AUC-2UU01384	0305
BC	TERMINAL, generator lead	AUC-16A0265	0601

Note Symbol	Official Stock Number	Figure Number	Part Number		ITEM	Quan. Reqd. per Unit Assy.	Unit Price
			Ordnance	Manufacturer			
Col. 1	Col. 2	Col. 3	Col. 4	Col. 5	Col. 6	Col. 7	Col. 8
					GROUP 06 — ELECTRICAL SYSTEM		
					0601 — GENERATOR		
	G121-0110400	06-3		AUC-16BLU02923	ARM, generator brush (AL-GCE-54)	2	
	2980-GEH-2054F	06-3		AUC-16BLU02927	ARMATURE, generator, assembly (AL-GEH-2054F)	1	
	2980-GEW-1024	06-3		AUC-16BLU02933	BAND, head, generator, assembly (AL-GEW-1024)	1	
H-1	H001-4139681			AUC-16BLU02942	NUT, generator head band (AL-8X-794) (part of KIT, repair, AUC-16UU03046)	1	
H-1	H101-0132926		132929	AUC-16BLU02941	SCREW, machine, rd-hd., S., No. 10 (.190)-32NF-2 x 1¼ (AL-X-715) (part of KIT, repair, AUC-16UU03046) (supersedes SCREW, AUC-A-1026)	1	
H-12	H012-1303017	06-3	700076	AUC-16BLU02883	BEARING, ball, S.R., radial (ND-3203) (generator commutator end)	1	
H-12	H012-1303020	06-3	700077	AUC-16BLU02889	BEARING, ball, S.R., radial (ND-3204) (generator drive end)	1	
	G116-0400320	06-3		AUC-16BLU02924	BRUSH, generator (AL-GCE-1012) (part of BRUSH SET, AUC-16BLU02924S)	2	
H-1	H001-1030078	06-3	100749	AUC-S-208A	SCREW, machine, rd-hd., S., No. 8 (.164) -32NC-2 x ¼ (part of KIT, repair, AUC-16UU03046)	2	
H-1	H001-1518004		106496	AUC-S-3164	WASHER, lock, hv., S., No. 8 (.164) (part of KIT, repair, AUC-16UU03046)	2	
	G121-0126320			AUC-16BLU02924S	BRUSH SET, generator (AL-GCE-2012S) (part of KIT, repair, AUC-16UU03046)	2	
					(Composed of:	1	
				AUC-16BLU02924	2 BRUSH)		
	G121-0127846	06-3		AUC-A-1032	BUSHING, insulating, generator field terminal (AL-GCY-25) (superseded by BUSHING, AUC-16BLU02901)	1	
	G121-0139650	06-3		AUC-16BLU02904	COIL, field, generator, assembly (L.H. and R.H.) (AL-GEB-1005A) (part of KIT, repair, AUC-16UU03047)	1	
	G121-0139660	06-3		AUC-16BLU02909	COIL, field, generator, assembly, L.H. (AL-GEB-1007A)	1	
	G121-0139665	06-3		AUC-16BLU02911	COIL, field, generator, assembly, R.H. (AL-GEB-1008B)	1	
	2980-GAR-83A	06-3		AUC-16BLU02917	COVER, generator commutator end (AL-GAR-83A) (part of KIT, repair, AUC-16UU03046)	1	
	G116-1782001	06-3		AUC-A-1027	SCREW, machine, bdg-hd., S., No. 10 (.190)-32NF-2 x 7/16 (AL-8X-726) (part of KIT, repair, AUC-16UU03046)	3	
H-1	H001-1519007		110334	AUC-S-3153	WASHER, lock, int. teeth, reg., S., No. 10 (.190) (part of KIT, repair, AUC-16UU03046) (supersedes WASHER, AUC-A-1029)	3	
	G156-0149315	06-3		AUC-16BLU02919	DEFLECTOR, air, generator (AL-GCE-55A)	1	
H-1	H001-1023625	06-3	100868	AUC-S-1602A	SCREW, machine, fl-hd., S., No. 10 (.190)-32NF-2 x ½ (supersedes SCREW, AUC-S-3811)	3	

H-1	H001-7016561		138597	AUC-S-3287C	WASHER, lock, ext. teeth, ck., S., cd-pltd., No. 10 (.190) (part of KIT, repair, AUC-16UU03046) (supersedes WASHER, AUC-A-1028)	3
	G156-0178299	06-3		AUC-16BLU02928	FAN, ventilating, generator (AL-SP-230)	1
H-1	H001-0518009	06-3	106749	AUC-S-2303	KEY, Woodruff, S., 1/8 x 1/2 (No. 404) (supersedes KEY, AUC-S-2301)	1
	G085-1414734	06-3		AUC-16BLU02926	NUT, ventilating fan (AL-GBM-21) (part of KIT, repair, AUC-16UU03046)	1
H-1	H001-1518013	06-3	103325	AUC-S-1351	WASHER, lock, reg., S., 5/8 in. (part of KIT, repair, AUC-16UU03046)	1
	G121-0163758	06-3		AUC-16BLU02918	GASKET, generator commutator end cover (AL-GBJ-25) (part of KIT, repair, AUC-16UU03046)	1
	4300-15416B	01-18, 06-3		AUC-2UU0495	GEAR, generator driven (HM-15416B)	1
H-1	H001-0518017	06-3	103906	AUC-S-2308	KEY, Woodruff, S., 5/32 x 3/4 (No. 506) (part of KIT, repair, AUC-16UU03046)	1
	G509-0196299	01-1		AUC-16BLU0410	GENERATOR, assembly (AL-GEW-4802) (superseded by GENERATOR, assembly, AUC-16BLU3410)	1
	G509-0196299			AUC-16BLU3410	GENERATOR, assembly (AL-GEW-4802) (supersedes GENERATOR, assembly, AUC-16BLU0410)	1
H-1	H001-0716007		218442	AUC-S-3709	NUT, jam, hex., s-fin., S., 5/8-11NC-2	1
				AUC-2UU093	SCREW, lock, generator	1
H-1	H001-1518013		103325	AUC-S-1351	WASHER, lock, reg., S., 5/8 in.	1
				AUC-16BLU0650	GENERATOR, w/GEAR, assembly	1
					(Composed of:	
				AUC-2UU0495	1 GEAR, generator driven	
				AUC-2UU0197	1 GEAR, governor drive	
				AUC-16BLU3410	1 GENERATOR, assembly	
				AUC-2UU01384	2 SCREW, governor drive gear)	
	G121-0205450	06-3		AUC-16BLU02914	GUARD, oil, generator commutator end (AL-DA-39) (part of KIT, repair, AUC-16UU03046) (supersedes WASHER, AUC-16BLU02914)	2
	G116-7002193	06-3		AUC-16BLU02921	HEAD, generator commutator end, assembly (AL-GCE-2050)	1
	2980-GCE-57	06-3		AUC-16BLU02932	HEAD, generator drive end (AL-GCE-57)	1
	G156-0211414			AUC-16BLU02929	HEAD, generator drive end, assembly (AL-GCE-1057)	1
	G121-0232700	06-3		AUC-16BLU02894	INSULATOR, generator field connection (AL-GAL-44) (part of KIT, repair, AUC-16UU03047)	1
				AUC-S-2301	KEY, Woodruff, generator armature shaft commutator end (part of KIT, repair, AUC-16UU03046) (superseded by KEY, AUC-S-2303)	1
	2980-KIT-12			AUC-16UU03046	KIT, repair, generator (AL-12)	1
					(Composed of:	
				AUC-16BLU02924S	1 BRUSH SET	
				AUC-16BLU02917	1 COVER, commutator end	
				AUC-16BLU02918	1 GASKET, cover, commutator end	
				AUC-16BLU02914	2 GUARD, oil	
				AUC-S-2301	1 KEY, Woodruff, armature shaft, commutator end	
				AUC-S-2308	1 KEY, Woodruff, armature shaft, drive end	
				AUC-16BLU02926	1 NUT, armature shaft, commutator end	
				AUC-S-4205	1 NUT, armature shaft, drive end	
				AUC-16BLU02942	1 NUT, head band screw	

Note Symbol	Official Stock Number	Figure Number	Part Number		ITEM	Quan. Reqd. per Unit Assy.	Unit Price
			Ordnance	Manufacturer			
Col. 1	Col. 2	Col. 3	Col. 4	Col. 5	Col. 6	Col. 7	Col. 8
					0601 — GENERATOR — Continued		
				AUC-16BLU02888	1 OILER, press in type		
				AUC-16BLU02931	1 RETAINER, bearing, drive end		
				AUC-S-3811	3 SCREW, bearing retainer, drive end		
				AUC-S-208A	2 SCREW, brush lead		
				AUC-16BLU02941	1 SCREW, head band		
				AUC-A-1027	3 SCREW, mounting, cover		
				AUC-S-3811	3 SCREW, mounting deflector		
				AUC-16BLU02922	2 SPRING, brush		
				AUC-16BLU02916	1 WASHER, commutator end, inner, felt		
				AUC-16BLU02915	1 WASHER, commutator end, outer, felt		
				AUC-S-1351	1 WASHER, lock, armature shaft nut		
				AUC-S-3164	2 WASHER, lock, brush lead screw		
				AUC-S-1346	2 WASHER, lock, frame screw		
				AUC-S-3153	3 WASHER, lock, mounting, cover		
				AUC-S-3287C	3 WASHER, lock, mounting, deflector)		
	G502-0196321			AUC-16UU03047	KIT, repair, generator field coil (AL-10)	1	
					(Composed of:		
				AUC-A-1031	1 BUSHING, insulating, armature terminal		
				AUC-16BLU02901	1 BUSHING, insulating, field terminal		
				AUC-16BLU02904	1 COIL, field, assembly (L. H. and R. H.)		
				AUC-16BLU02896	1 INSULATOR, armature terminal, inner		
				AUC-16BLU02893	1 INSULATOR, armature terminal, outer		
				AUC-16BLU02894	1 INSULATOR, field connection		
				AUC-16BLU02897	1 INSULATUR, field terminal		
				AUC-16BLU02906	1 LEAD, armature terminal, assembly		
				AUC-16BLU02881	2 NUT, armature terminal		
				AUC-S-3710	1 NUT, field ground screw		
				AUC-S-3745	2 NUT, field terminal		
				AUC-16BLU02882	1 SCREW, field ground		
				AUC-16BLU02898	2 SCREW, pole piece		
				AUC-16BLU02899	1 WASHER, insulating, armature terminal, outer		
				AUC-16BLU02895	1 WASHER, insulating, field terminal, outer		
				AUC-S-1345	1 WASHER, lock, armature terminal		
				AUC-S-1343	1 WASHER, lock, field ground screw		
				AUC-S-1344	1 WASHER, lock, field terminal		
				AUC-S-742	1 WASHER, plain, armature terminal		
				AUC-S-350	1 WASHER, plain, field terminal)		

	G121-0273850	06-3		AUC-16BLU02906	LEAD, generator armature terminal, assembly (AL-GEB-44) (part of KIT, repair, AUC-16UU03047)	1
	G067-0904010	06-3		AUC-16BLU02888	OILER, press in type, 1/4 in. (generator commutator end head) (AL-X-489) (part of KIT, repair, AUC-16UU03046)	1
	G067-0904010	06-3		AUC-16BLU02888	OILER, press in type, 1/4 in. (generator drive end head) (AL-X-489) (part of KIT, repair, AUC-16UU03046)	1
	G509-0382830	01-7		AUC-2UU01359	OIL SEAL, generator (HM-4790A)	1
	G067-0904050	06-3		AUC-16UU03034	PIN, dowel, generator frame (AL-MN-21)	2
	G121-0342160	06-3		AUC-16BLU02903	POLE PIECE, generator (AL-GEB-29)	2
	G156-0382047	06-3		AUC-16BLU02898	SCREW, generator pole piece (AL-GBY-38) (part of KIT, repair, AUC-16UU03047)	2
	G156-0342416	06-3		AUC-16A02908	POST, generator armature terminal (AL-GEB-27)	1
	G121-0127843	06-3		AUC-A-1031	BUSHING, insulating, armature terminal (AL-GCT-25) (part of KIT, repair, AUC-16UU03047)	1
	G121-0232740	06-3		AUC-16BLU02896	INSULATOR, armature terminal, inner (AL-GBW-66) (part of KIT, repair, AUC-16UU03047)	1
	G121-0232730	06-3		AUC-16BLU02893	INSULATOR, armature terminal, outer (AL-GAA-32) (part of KIT, repair, AUC-16UU03047)	1
H-1	H001-0716660	06-3	503101	AUC-16BLU02881	NUT, machine screw, hex., S., No. 14 (.242)-24NS-1 (AL-8X-177) (part of KIT, repair, AUC-16UU03047)	2
	G121-0442956	06-3		AUC-16BLU02899	WASHER, insulating, armature terminal, outer (AL-GC-26) (part of KIT, repair, AUC-16UU03047)	1
H-1	H001-1518007		103319	AUC-S-1345	WASHER, lock, reg., S., 1/4 in. (part of KIT, repair, AUC-16UU03047)	2
H-1	H001-1530007	06-3	103339	AUC-S-364	WASHER, plain, S., SAE std., 1/4 in. (9/32 in. I.D. x 5/8 in. O.D. x 1/16 in. thick) (supersedes WASHER, AUC-S-742)	1
	G121-0342320	06-3		AUC-16B02908	POST, generator field terminal (AL-GEB-58)	1
	G121-0127846			AUC-16BLU02901	BUSHING, insulating, field terminal (AL-GCY-25) (part of KIT, repair, AUC-16UU03047) (supersedes BUSHING, AUC-A-1032)	1
	G121-0232750	06-3		AUC-16BLU02897	INSULATOR, field terminal (AL-GBW-67) (part of KIT, repair, AUC-16UU03047)	1
H-1	H001-0716610	06-3	103088	AUC-S-3745	NUT, machine screw, hex., S., No. 10 (.190)-32NF-1 (part of KIT, repair, AUC-16UU03047)	2
	G121-0442942	06-3		AUC-16BLU02895	WASHER, insulating, field terminal (AL-GBW-34) (part of KIT, repair, AUC-16UU03047)	1
H-1	H001-1518005		106497	AUC-W-7508	WASHER, lock, reg., S., No. 10 (.190) (supersedes WASHER, AUC-S-1344)	2
H-1	H001-7045491	06-3	120385	AUC-S-350	WASHER, plain, special, S., No. 10 (.190) (AL-8X-349) (part of KIT, repair, AUC-16UU03047) (supersedes WASHER, AUC-A-1411)	1
	G156-0367606	06-3		AUC-16BLU02931	RETAINER, bearing, generator drive end (AL-GAE-47) (part of KIT, repair, AUC-16UU03046)	1
H-1	H001-1023625	06-3	100868	AUC-S-1602A	SCREW, machine, fl-hd., S., No. 10 (.190)-32NF-2 x 1/2 (supersedes SCREW, AUC-S-3811)	3
H-1	H001-7016561		138597	AUC-S-3287C AUC-S-3811	WASHER, lock, ext. teeth, ck., S., cd-pltd., No. 10 (.190) SCREW, generator bearing retainer, drive end (part of KIT, repair, AUC-16UU03046) (superseded by SCREW, AUC-S-1602A)	3 3

Note Symbol	Official Stock Number	Figure Number	Part Number		ITEM	Quan. Reqd. per Unit Assy.	Unit Price
			Ordnance	Manufacturer			
Col. 1	Col. 2	Col. 3	Col. 4	Col. 5	Col. 6	Col. 7	Col. 8
					0601 — GENERATOR — Continued		
	G116-1781899			AUC-16BLU02892	SCREW, generator frame (AL-DK-23A) (superseded by SCREW, AUC-16A02892)	2	
	G121-0382182	06-3		AUC-16A02892	SCREW, generator frame (AL-DK-23) (supersedes SCREW, AUC-16BLU02892)	2	
H-1	H001-1518008		103320	AUC-S-1346	WASHER, lock, reg., S., 5/16 in. (part of KIT, repair, AUC-16UU03046) (supersedes WASHER, AUC-A-1030)	2	
H-1	H101-0132926		132929	AUC-A-1026	SCREW, generator head band (AL-X-715) (superseded by SCREW, AUC-16BLU02941)	1	
	G154-0382036			AUC-16BLU02882	SCREW, machine, fl-hd., S., No. 6 (.138)-32NC-2 x 9/16 (AL-8X-1420) (generator field ground) (part of KIT, repair, AUC-16UU03047)	1	
H-1	H001-0716530		103091	AUC-S-3710	NUT, machine screw, hex., S., No. 6 (.138)-32NC-1 (part of KIT, repair, AUC-16UU03047)	1	
H-1	H001-1518003		106495	AUC-S-1343	WASHER, lock, reg., S., No. 6 (.138) (part of KIT, repair, AUC-16UU03047)	1	
H-1	H001-1030587	06-3	100765	AUC-S-6127A	SCREW, machine, rd-hd., S., No. 10 (.190)-32NF-2 x 5/8 (generator ground)	1	
H-1	H001-1518005		106497	AUC-W-7508	WASHER, lock, reg., S., No. 10 (.190)	1	
				AUC-S-3811	SCREW, mounting, generator air deflector (part of KIT, repair, AUC-16UU03046) (superseded by SCREW, AUC-S-1602A)	3	
	G104-1789657	06-3		AUC-16BLU02922	SPRING, generator brush (AL-GCE-53) (part of KIT, repair, AUC-16UU03046)	2	
	G154-0398792			AUC-16BLU02912	TERMINAL, generator (AL-X-959)	1	
		06-3		AUC-16A0265	TERMINAL, generator lead (AL-X-975)	1	
	G156-0400400	06-3		AUC-16BLU02925	THROWER, oil, generator drive end (AL-DG-1144)	1	
	G121-0442945	06-3		AUC-16BLU02916	WASHER, felt, generator commutator end, inner (AL-DH-7) (part of KIT, repair, AUC-16UU03046)	1	
	G156-0443057	06-3		AUC-16BLU02915	WASHER, felt, generator commutator end, outer (AL-DA-132) (part of KIT, repair, AUC-16UU03046)	1	
H-1	H001-7016561		138597	AUC-A-1028	WASHER, lock, generator air deflector mounting (AL-X-1621 (superseded by WASHER, AUC-S-3287C)	3	
H-1	H001-1519007		110334	AUC-A-1029	WASHER, lock, generator cover mounting (AL-X-1270) (superseded by WASHER, AUC-S-3153)	3	
				AUC-S-1344	WASHER, lock, generator field terminal (part of KIT, repair, AUC-16UU03047) (superseded by WASHER, AUC-W-7508)	2	
H-1	H001-1518008		103320	AUC-A-1030	WASHER, lock, generator frame screw (AL-X-1014) (superseded by WASHER, AUC-S-1346)	2	

			AUC-S-742	WASHER, plain, generator armature terminal (part of KIT, repair, AUC-16UU03047) (superseded by WASHER, AUC-S-364)	1
			AUC-A-1411	WASHER, plain, generator field terminal (superseded by WASHER, AUC-S-350)	1
				0601B — REGULATORS	
	06-4		AUC-A-1033	ARMATURE, generator current regulator (AL-VRY-1061A) (part of KIT, repair, AUC-16UU03049)	1
	06-4		AUC-A-1038	ARMATURE, generator regulator circuit breaker (AL-VRY-1043) (part of KIT, repair, AUC-16UU03048)	1
2980-VRY-1080A	06-4		AUC-A-1045	ARMATURE, generator voltage regulator (AL-VRY-1080A) (part of KIT, repair, AUC-16UU03051)	1
2980-VRA-1055	06-4		AUC-A-1485	BASE, insulation, generator voltage regulator (AL-VRA-1055)	1
			AUC-A-1495	BRACKET, adjusting, generator current regulator air gap (AL-VRA-1060)	1
	06-4		AUC-A-1495	BRACKET, adjusting, generator voltage regulator air gap (AL-VRA-1060)	1
G502-0125856			AUC-A-1486	BRACKET, mounting, generator voltage regulator resistor (AL-VRA-67)	1
2980-VRY-3070B	06-4		AUC-A-1405	COIL, generator current regulator, assembly (AL-VRY-3070B)	1
2980-VRY-3071A	06-4		AUC-A-1406	COIL, generator voltage regulator, assembly (AL-VRY-3071A)	1
G502-0139775	06-4		AUC-A-1404	COIL, generator voltage regulator circuit breaker, assembly (AL-VRY-3035)	1
G067-0902180	06-4		AUC-A-1487	CONNECTOR, generator voltage regulator series coil (AL-VRA-46)	1
G154-0392749	06-4		AUC-A-1039	CONTACT, generator regulator circuit breaker, w/stationary BRACKET, assembly (AL-VRH-1073) (part of KIT, repair, AUC-16UU03048)	1
G154-0140096	06-4		AUC-A-1488	COVER, generator voltage regulator (AL-VRA-1002)	1
G067-0902830	06-4		AUC-16UU03413	GASKET, generator voltage regulator cover (AL-VRA-50) (superseded by GASKET, AUC-16UU03413A)	1
2980-VRH-50	06-4		AUC-16UU03413A	GASKET, generator voltage regulator cover (AL-VRH-50) (supersedes GASKETS, AUC-16UU03413 and AUC-16UU03497, and INSULATION, AUC-A-1489)	1
G067-0902840	06-4		AUC-16UU03497	GASKET, generator voltage regulator terminal (AL-VRA-51) (superseded by GASKET, AUC-16UU03413A)	1
G502-0232822	06-4		AUC-A-1040	INSULATION, generator regulator circuit breaker stationary bracket (AL-VRA-76) (part of KIT, repair, AUC-16UU03048)	1
G067-0903450	06-4		AUC-A-1489	INSULATION, generator voltage regulator terminal (AL-VRA-52) (superseded by GASKET, AUC-16UU03413A)	1

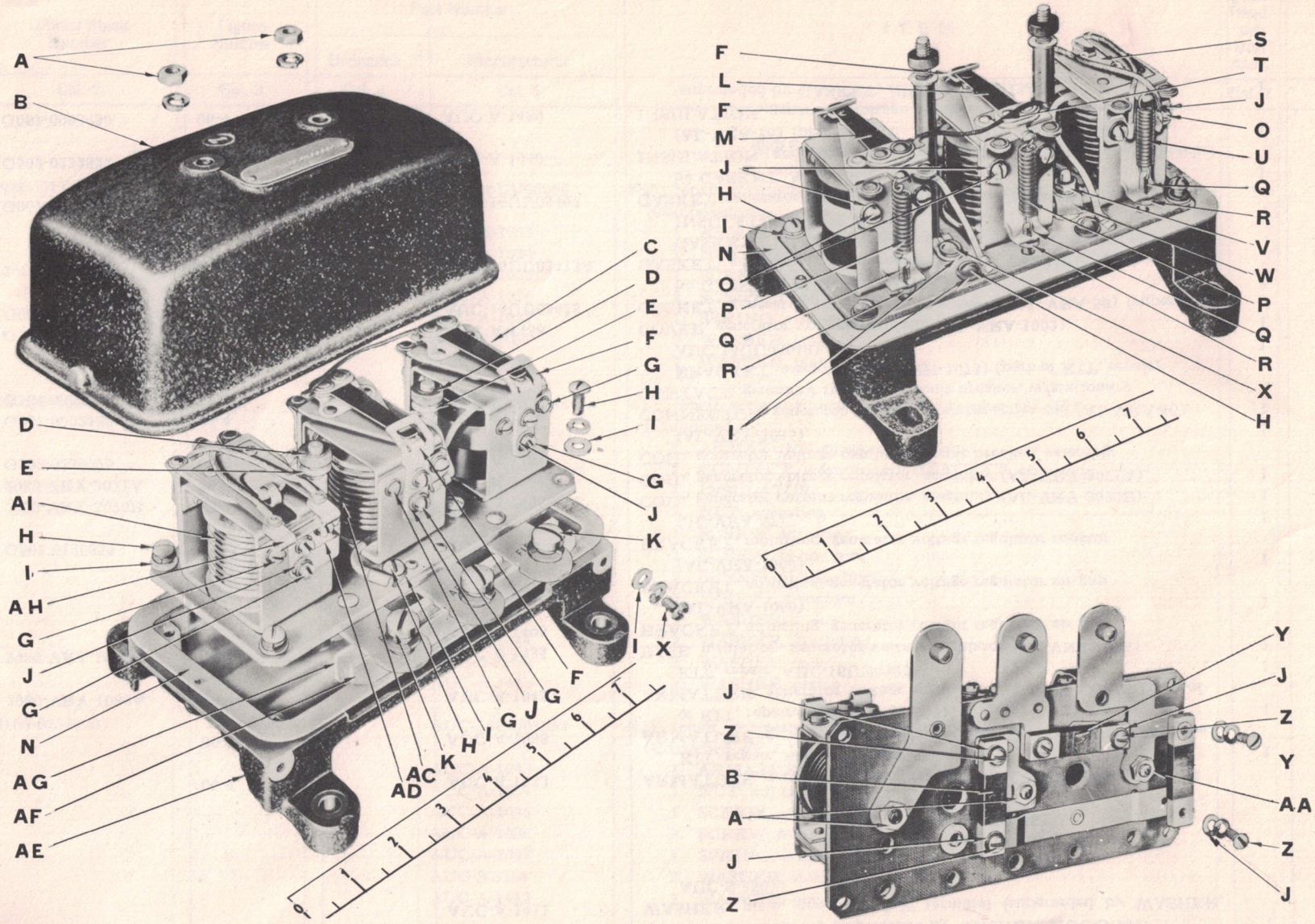

FIGURE 06-4 GENERATOR REGULATOR RA PD 346197

FIGURE 06-4 GENERATOR REGULATOR RA PD 346197A

KEY	ITEM	PART NO.	GROUP.
A	NUT, hex. (cover mounting)	AUC-S-76C	0601B
B	COVER, generator voltage regulator	AUC-A-1488	0601B
C	COIL, voltage regulator, assembly	AUC-A-1406	0601B
D	WASHER, rubber	AUC-16UU03429	0601B
E	WASHER, plain (cover mounting)	AUC-S-364C	0601B
F	BRACKET, adjusting	AUC-A-1495	0601B
G	SCREW, mounting	AUC-A-1041	0601B
H	SCREW, machine	AUC-A-1492	0601B
I	WASHER, plain	AUC-8UU0531A	0601B
J	WASHER, plain	AUC-A-1412	0601B
K	SCREW, terminal	AUC-16UU03249	0601B
L	ARMATURE, current regulator	AUC-A-1033	0601B
M	ARMATURE, voltage regulator	AUC-A-1045	0601B
N	GASKET, regulator cover	AUC-16UU03413A	0601B
O	SCREW, mounting	AUC-A-1036	0601B
P	SPRING, armature	AUC-A-1037	0601B
Q	SCREW, adjusting	AUC-A-1035	0601B
R	NUT, adjusting	AUC-A-1034	0601B
S	ARMATURE, circuit breaker	AUC-A-1038	0601B
T	LEAD, armature to current regulator armature	AUC-A-1490	0601B
U	SPRING, armature	AUC-A-1042	0601B
V	NUT, hex. (series connection)	AUC-S-3745C	0601B
W	CONNECTOR, series coil	AUC-A-1487	0601B
X	SCREW, machine	AUC-W-6133C	0601B
Y	RESISTOR, carbon	AUC-16UUA03424	0601B
Z	SCREW, machine	AUC-A-1491	0601B
AA	NUT, hex. (coil mounting)	AUC-S-1416C	0601B
AB	RESISTOR, carbon	AUC-16UU03424	0601B
AC	COIL, current regulator, assembly	AUC-A-1405	0601B
AD	INSULATION, bracket	AUC-A-1040	0601B
AE	BASE, insulation	AUC-A-1485	0601B
AF	INSULATION, terminal	AUC-A-1489	0601B
AG	GASKET, terminal	AUC-16UU03497	0601B
AH	CONTACT, w/BRACKET, assembly	AUC-A-1039	0601B
AI	COIL, circuit breaker, assembly	AUC-A-1404	0601B

Note Symbol	Official Stock Number	Figure Number	Part Number		ITEM	Quan. Reqd. per Unit Assy.	Unit Price
			Ordnance	Manufacturer			
Col. 1	Col. 2	Col. 3	Col. 4	Col. 5	Col. 6	Col. 7	Col. 8
					0601B — REGULATORS — Continued		
	2980-KIT-14			AUC-16UU03049	KIT, repair, generator current regulator (AL-14)..... (Composed of:	1	
				AUC-A-1033	1 ARMATURE, assembly		
				AUC-A-1034	1 NUT, adjusting		
				AUC-A-1035	1 SCREW, adjusting		
				AUC-A-1036	2 SCREW, fil-hd.		
				AUC-A-1037	1 SPRING, armature		
				AUC-S-3164	2 WASHER, lock		
				AUC-A-1412	2 WASHER, plain)		
	G502-0125961			AUC-16UU03048	KIT, repair, generator regulator circuit breaker (AL-13)..... (Composed of:	1	
				AUC-A-1038	1 ARMATURE, breaker, assembly		
				AUC-A-1039	1 CONTACT, w/stationary BRACKET, assembly		
				AUC-A-1040	1 INSULATOR		
				AUC-A-1034	1 NUT, adjusting		
				AUC-A-1035	1 SCREW, adjusting		
				AUC-A-1036	2 SCREW, fil-hd., long		
				AUC-A-1041	2 SCREW, fil-hd., short		
				AUC-A-1042	1 SPRING, armature		
				AUC-A-1043	2 WASHER		
				AUC-A-1044	2 WASHER, insulating		
				AUC-S-3164	3 WASHER, lock		
				AUC-A-1412	3 WASHER, plain)		
	G160-0232500			AUC-16UU03051	KIT, repair, generator voltage regulator (AL-15)..... (Composed of:	1	
				AUC-A-1045	1 ARMATURE, assembly		
				AUC-A-1034	1 NUT, adjusting		
				AUC-A-1035	1 SCREW, adjusting		
				AUC-A-1036	2 SCREW, fil-hd.		
				AUC-A-1037	1 SPRING, armature		
				AUC-S-3164	2 WASHER, lock		
				AUC-A-1412	2 WASHER, plain)		
	G067-0903630			AUC-16UUA03441	LEAD, generator voltage regulator armature to base (AL-VRH-26).....	1	

	G507-0273800	06-4		AUC-A-1490	LEAD, generator voltage regulator armature to current regulator armature (AL-VRA-133)	1
	G067-0903910	06-4		AUC-A-1034	NUT, adjusting, generator current regulator (AL-VRA-15) (part of KIT, repair, AUC-16UU03049)	1
	G067-0903910	06-4		AUC-A-1034	NUT, adjusting, generator regulator circuit breaker (AL-VRA-15) (part of KIT, repair, AUC-16UU03048)	1
	G067-0903910	06-4		AUC-A-1034	NUT, adjusting, generator voltage regulator (AL-VRA-15) (part of KIT, repair, AUC-16UU03051)	1
H-1	H001-4022721	06-4	BBMX1C-1	AUC-S-3745C	NUT, machine screw, hex., S., cd-pltd. No. 10 (.190)-32NF-1 (generator voltage regulator series connection)	1
H-1	H001-4026501	06-4	220069	AUC-S-76C	NUT, reg., hex., s-fin., S., cd-pltd., 1/4-20NC-2 (generator voltage regulator cover mounting)	2
H-1	H001-4027501	06-4	218584	AUC-S-1416C	NUT, reg., hex., s-fin., S., cd-pltd., 1/4-28NF-2 (generator voltage regulator coil mounting)	3
				AUC-A-1497	PLUG, pipe, hex-hd., S., 1/8 in. (AL-VAD-166) (generator voltage regulator drain)	1
	G510-0367338			AUC-16BLM0620	REGULATOR, generator voltage, assembly (AL-VRY-4201A) (superseded by REGULATOR, assembly, AUC-16BLM3620)	1
				AUC-16BLM3620	REGULATOR, generator voltage, assembly (AL-VRY-4201C) (formerly listed as AL-VRY-4201A) (supersedes REGULATOR, assembly, AUC-16BLM0620)	1
	G574-0367616	06-4		AUC-16UU03424	RESISTOR, carbon, generator voltage regulator, marked 7 (AL-TC-51U)	1
	G507-0367615	06-4		AUC-16UUA03424	RESISTOR, carbon, generator voltage regulator, marked 80 (AL-TC-51N)	2
	G067-0904830	06-4		AUC-A-1035	SCREW, adjusting, generator current regulator (AL-VRA-16) (part of KIT, repair, AUC-16UU03049)	1
	G067-0904830	06-4		AUC-A-1035	SCREW, adjusting, generator regulator circuit breaker (AL-VRA-16) (part of KIT, repair, AUC-16UU03048)	1
	G067-0904830	06-4		AUC-A-1035	SCREW, adjusting, generator voltage regulator (AL-VRA-16) (part of KIT, repair, AUC-16UU03051)	1
	G067-0904930	06-4		AUC-16UU03249	SCREW, generator voltage regulator terminal (AL-8X-137)	3
H-1	H001-5148821	06-4	121540	AUC-W-6133C	SCREW, machine, rd-hd., S., cd-pltd., No. 10 (.190)-32NF-2 x 5/16 (generator voltage regulator ground)	1
H-1	H001-5148821	06-4	121540	AUC-W-6133C	SCREW, machine, rd-hd., S., cd-pltd., No. 10 (.190)-32NF-2 x 5/16 (generator voltage regulator lead connection)	1
H-1	H001-5148831		132900	AUC-W-6132C	SCREW, machine, rd-hd., S., cd-pltd., No. 10 (.190)-32NF-2 x 3/8 (generator voltage regulator lead connection)	1
H-1	H001-5147531	06-4	121832	AUC-A-1491	SCREW, machine, rd-hd., S., cd-pltd., No. 8 (.164)-32NC-2 x 3/8 (generator voltage regulator resistor mounting)	6
H-1	H001-5148851	06-4	132910	AUC-A-1492	SCREW, machine, rd-hd., S., cd-pltd., No. 10 (.190)-32NF-2 x 1/2 (generator voltage regulator base mounting)	6
H-1	H001-5148851	06-4	132910	AUC-A-1492	SCREW, machine, rd-hd., S., cd-pltd., No. 10 (.190)-32NF-2 x 1/2 (generator voltage regulator lead connection)	1
H-1	H001-5125861	06-4	131974	AUC-A-1036	SCREW, mounting, generator current regulator armature and bridge (AL-8X-878) (part of KIT, repair, AUC-16UU03049)	2

Note Symbol	Official Stock Number	Figure Number	Part Number		ITEM	Quan. Reqd. per Unit Assy.	Unit Price
			Ordnance	Manufacturer			
Col. 1	Col. 2	Col. 3	Col. 4	Col. 5	Col. 6	Col. 7	Col. 8
					0601B — REGULATORS — Continued		
H-1	H001-5125861	06-4	131974	AUC-A-1036	SCREW, mounting, generator regulator circuit breaker armature and bridge (AL-8X-878) (part of KIT, repair, AUC-16UU03048)	2	
H-1	H001-5125821	06-4	131958	AUC-A-1041	SCREW, mounting, generator regulator circuit breaker stationary bracket and armature (AL-8X-888) (part of KIT, repair, AUC-16UU03048)	4	
H-1	H001-5125861	06-4	131974	AUC-A-1036	SCREW, mounting, generator voltage regulator armature and bridge (AL-8X-878) (part of KIT, repair, AUC-16UU03051)	2	
	G067-0905060			AUC-16UU03065	SEAL, lead and wire, generator voltage regulator (AL-GAG-138)	1	
	G067-0905600	06-4		AUC-A-1037	SPRING, armature, generator current regulator, 14½ coils (AL-VRA-84) (part of KIT, repair, AUC-16UU03049)	1	
	G067-0905420	06-4		AUC-A-1042	SPRING, armature, generator regulator circuit breaker, 16 coils (AL-VRA-17) (part of KIT, repair, AUC-16UU03048)	1	
	G067-0905600			AUC-A-1037	SPRING, armature, generator voltage regulator, 14½ coils (AL-VRA-84) (part of KIT, repair, AUC-16UU03051)	1	
	G067-0903390			AUC-A-1043	WASHER, insulating, generator regulator circuit breaker stationary bracket (¼ in. O.D.) (AL-GAA-35) (part of KIT, repair, AUC-16UU03048)	2	
	G067-0906490			AUC-A-1044	WASHER, insulating, generator regulator circuit breaker stationary bracket (⅜ in. O.D.) (AL-X-1465) (part of KIT, repair, AUC-16UU03048)	2	
H-1	H001-1518004		106496	AUC-S-3164	WASHER, lock, hv., S., No. 8 (generator current regulator adjusting bracket and armature mounting) (part of KIT, repair, AUC-16UU03049)	6	
H-1	H001-1518004		106496	AUC-S-3164	WASHER, lock, hv., S., No. 8 (generator regulator circuit breaker stationary contact bracket and armature mounting) (part of KIT, repair, AUC-16UU03048)	6	
H-1	H001-1518004		106496	AUC-S-3164	WASHER, lock, hv., S., No. 8 (generator voltage regulator adjusting bracket and armature mounting) (part of KIT, repair, AUC-16UU03051)	6	
H-1	H001-1518004		106496	AUC-S-3164	WASHER, lock, hv., S., No. 8 (generator voltage regulator resistor mounting)	6	
H-1	H001-1518007		103319	AUC-S-1345	WASHER, lock, reg., S., ¼ in. (generator voltage regulator coil mounting)	3	
H-1	H001-1518005		106497	AUC-W-7508	WASHER, lock, reg., S., No. 10 (.190) (generator voltage regulator lead connection)	4	
H-1	H001-7023681		121637	AUC-A-1493	WASHER, lock, reg., S., tinned, ¼ in. (AL-12X-199) (generator voltage regulator cover mounting)	2	

H-1	H001-7025711		120214	AUC-A-1494	WASHER, lock, reg., S., tinned, $^{5}/_{16}$ in. (AL-12X-1014) (generator voltage regulator terminal screw)	3
H-1	H001-7025621		120217	AUC-A-1496	WASHER, lock, reg., S., tinned, No. 10 (.190) (generator voltage regulator base mounting)	6
H-1	H001-7025621		120217	AUC-A-1496	WASHER, lock, reg., S., tinned, No. 10 .(190) (generator voltage regulator ground screw)	1
H-1	H001-7043681	06-4	120392	AUC-S-364C	WASHER, plain, S., cd-pltd., $^{1}/_{4}$ in. (AL-8X-361) (generator voltage regulator cover mounting)	4
H-1	H001-7043591		131015	AUC-A-1412	WASHER, plain, S., cd-pltd., No. 8 (AL-8X-350) (generator current regulator adjusting bracket and armature mounting) (part of KIT, repair, AUC-16UU03049)	4
H-1	H001-7043591		131015	AUC-A-1412	WASHER, plain, S., cd-pltd., No. 8 (AL-8X-350) (generator regulator circuit breaker stationary contact bracket and armature mounting) (part of KIT, repair, AUC-16UU03048)	4
H-1	H001-7043591		131015	AUC-A-1412	WASHER, plain, S., cd-pltd., No. 8 (AL-8X-350) (generator voltage regulator adjusting bracket and armature mounting) (part of KIT, repair, AUC-16UU03051)	4
H-1	H001-7043591	06-4	131015	AUC-A-1412	WASHER, plain, S., cd-pltd., No. 8 (AL-8X-350) (generator voltage regulator resistor mounting)	6
H-1	H001-7043621	06-4	120391	AUC-8UU0531A	WASHER, plain, S., cd-pltd., No. 10 (AL-8X-183A) (generator voltage regulator base mounting)	6
H-1	H001-7043621	06-4	120391	AUC-8UU0531A	WASHER, plain, S., cd-pltd., No. 10 (AL-8X-183A) (generator voltage regulator ground screw)	1
H-1	H001-7043621	06-4	120391	AUC-8UU0531A	WASHER, plain, S., cd-pltd., No. 10 (AL-8X-183A) (generator voltage regulator lead connection)	4
	G104-1842779	06-4		AUC-16UU03429	WASHER, rubber, generator voltage regulator cover mounting (AL-VRA-109)	2
					0602 — CRANKING MOTOR	
	G156-0101800	01-6, 28		AUC-2TH0783	ADAPTER, cranking motor (HM-7064B)	1

Note Symbol	Official Stock Number	Figure Number	Part Number		ITEM	Quan. Reqd. per Unit Assy.	Unit Price
			Ordnance	Manufacturer			
Col. 1	Col. 2	Col. 3	Col. 4	Col. 5	Col. 6	Col. 7	Col. 8
					0602-1 — CRANKING MOTOR, AUC-16HM4560		
					Note: CRANKING MOTOR ASSEMBLY, AUC-16HM4560, used on all cars up to and including U-7144-T-A4815		
	2580-37895			AUC-16HM02861	ARMATURE, cranking motor, assembly (DR-37895)	1	
	G147-0115952			AUC-16HM02864	BAND, head, cranking motor, assembly (DR-1880355)	1	
H-1	H001-4139681			AUC-16BLU02942	NUT, square, S., No. 10 (.190)-32NF-2 (AL-8X-794)	1	
H-1	H001-1030594		100770	AUC-S-209A	SCREW, machine, rd-hd., S., No. 10 (.190)-32NF-2 x 1¼	1	
	G162-0118005			AUC-16HM02868	BEARING, cranking motor commutator end (DR-38296)	1	
	2580-35058			AUC-16HM02867	BEARING, cranking motor drive end (DR-35058)	1	
	2580-35048			AUC-16HM02884	BEARING, cranking motor intermediate plate (DR-35048)	1	
				AUC-16HM02865	BRUSH, cranking motor (DR-16083)	6	
				AUC-16HM02887	BUSHING, insulating, cranking motor brush holder rivet (DR-21428)	6	
	G103-0502266			AUC-16HM02873	BUSHING, insulating, cranking motor terminal stud (DR-809051)	3	
	G150-0392750			AUC-16T0596	CLIP, Bendix drive spring support (ECM-F-2285)	1	
				AUC-16HM02885	CLIP, cranking motor brush lead (DR-35586)	6	
				AUC-16HM02891	CLIP, cranking motor field lead (DR-36799)	4	
	2580-38275			AUC-16HM02871	COIL, field, cranking motor, assembly, L.H. (DR-38275)	1	
	2580-38276			AUC-16HM02869	COIL, field, cranking motor, assembly, R.H. (DR-38276)	1	
	2580-811194			AUC-16SCM0880	DRIVE, cranking motor, assembly (ECM-A-1303)	1	
				AUC-16HM02857	FRAME, cranking motor, w/FIELD, assembly (DR-38274)	1	
	2580-808949			AUC-16A0595	HEAD, Bendix drive (ECM-F-1272)	1	
	G162-0188200			AUC-16HM02859	HEAD, cranking motor, commutator end (DR-38290)	1	
	2580-16999			AUC-16HM02863	HOUSING, pinion, cranking motor, assembly (DR-16999)	1	
				AUC-16HM02934	SCREW, pinion housing to motor frame (DR-37872)	12	
H-1	H001-1518005		106497	AUC-W-7508	WASHER, lock, reg., S., No. 10 (.190)	12	
	G150-0392192			AUC-16HM02874	INSULATION, cranking motor field coil (DR-33345)	1	
H-1	H001-0518017		103906	AUC-S-2308	KEY, Woodruff, S., 5/32 x ¾ (No. 506) (cranking motor Bendix drive)	1	
	G510-0295837			AUC-16HM4560	MOTOR, cranking, assembly (DR-412) (superseded by MOTOR, assembly, AUC-16UUB3560—see 0602-2)	1	
	G096-1900230			AUC-16HM02862	PLATE, intermediate, cranking motor drive end (DR-16199)	1	
H-1	H001-1013002		216914	AUC-W-36	SCREW, cap, hex-hd., S., ¼-20NC-2 x ⅝	1	
	2580-828483			AUC-16HM02876	SCREW, intermediate plate, 15/32 in. long thread (DR-828483)	1	
H-1	H001-1518007		103319	AUC-S-1345	WASHER, lock, reg., S., ¼ in.	2	
H-6	H006-0282440		501593	AUC-S-4208	PLUG, expansion, S., ¾ in. diam. (cranking motor head commutator end)	1	
	G162-0384923			AUC-16HM02858	POLE PIECE, cranking motor (DR-36497)	6	
				AUC-16HM02936	SCREW, mounting, pole piece, 5/16 in. (DR-802790)	6	
	G102-0401288			AUC-16HM02935	SCREW, mounting, pole piece, ⅜ in. (DR-828675)	6	
	G162-0370061			AUC-16HM02886	RIVET, cranking motor brush holder (DR-1855434)	6	
	2580-810287			AUC-16A0593	SCREW, Bendix drive head spring (ECM-F-2579)	1	

	2580-810288			AUC-16A0592	SCREW, Bendix drive shaft spring (ECM-F-2578)	1
H-1	H001-1030078		100749	AUC-S-208A	SCREW, machine, rd-hd., S., No. 8 (.164)-32NC-2 x 1/4 (cranking motor brush ground lead)	4
H-1	H001-1518004		106496	AUC-S-3164	WASHER, lock, hv., S., No. 8 (.164)	4
H-1	H001-1030079		110986	AUC-S-3138A	SCREW, machine, rd-hd., S., No. 8 (.164)-32NC-2 x 5/16 (cranking motor brush to field lead)	2
H-1	H001-1518004		106496	AUC-S-3164	WASHER, lock, hv., S., No. 8 (.164)	2
	2580-811080			AUC-16SCM02004	SHAFT, Bendix drive, w/SLEEVE, assembly (ECM-F-4453)	1
	2580-808950			AUC-16A0594	SLEEVE, cranking motor Bendix drive (ECM-F-1756)	1
	2580-809518			AUC-16T0538	SPRING, Bendix drive (ECM-F-3135)	1
				AUC-16HM02866	SPRING, cranking motor brush arm (DR-34846)	6
	G147-0392276			AUC-16HM02877	STUD, cranking motor terminal (DR-35074)	1
H-1	H001-4185580			AUC-16HM02875	NUT, terminal stud, 3/8 in. (DR-805258)	1
H-1	H001-1518009		103321	AUC-S-1347	WASHER, lock, reg., S., 3/8 in.	1
H-1	H001-1530009		103341	AUC-S-387	WASHER, plain, S., SAE std., 3/8 in.	1
				AUC-16HM02878	WASHER, cranking motor brush holder rivet (DR-24754)	6
	G102-0401540			AUC-16WB02959	WASHER, cranking motor shaft drive end (DR-833602)	1
	2580-35729			AUC-16HM02879	WASHER, insulating, cranking motor brush holder rivet (DR-35729)	6
	G103-0502265			AUC-16HM02872	WASHER, insulating, cranking motor terminal stud (DR-817077)	2
	2580-806427			AUC-16A0539	WASHER, lock, Bendix drive spring screw (ECM-F-1648)	2
H-1	H001-1530011		103343	AUC-S-374	WASHER, plain, S., SAE std., 1/2 in. (17/32 in. I.D. x 1 in. O.D. x 3/32 in. thick) (cranking motor shaft commutator end)	1

0602-2 — CRANKING MOTOR, AUC-16UUB3560

Note: CRANKING MOTOR ASSEMBLY, AUC-16UUB3560, used on all cars from Serial No. U-7144-T-A5300 and up

	G509-0110640			AUC-16UU02861	ARMATURE, cranking motor, assembly (AL-ML-2085)	1
	G063-0100053			AUC-16UU03027	BAND, head, cranking motor, assembly (AL-GX-1024F)	1
H-1	H001-4139681			AUC-16BLU02942	NUT, square, S., No. 10 (.190)-32NF-2 (AL-8X-794)	1
H-1	H001-1030594		100770	AUC-16BLU02941	SCREW, machine, rd-hd., S., No. 10 (.190)-32NF-2 x 1 1/4 (part of KIT, repair, AUC-16UUA03054)	1
	G156-0118024			AUC-16UU02868	BEARING, cranking motor commutator end (AL-MAL-40A) (part of KIT, repair, AUC-16UUA03054)	1
	G156-0118027			AUC-16UU03031	BEARING, cranking motor intermediate plate (AL-ML-21A) (part of KIT, repair, AUC-16UUA03054)	1
	G509-0117007	06-5		AUC-16UU03033	BEARING, cranking motor pinion housing, drive end (AL-ML-18) (part of KIT, repair, AUC-16UUA03054)	1
	G116-0400340			AUC-16UU02865	BRUSH, cranking motor (AL-MH-54) (part of KIT, repair, AUC-16UUA03054)	4
	G156-0128033	06-5		AUC-16UU02954	BUSHING, insulating, cranking motor brush holder (AL-GT-35) (part of KIT, repair, AUC-16UUA03054)	2
	G156-0131575	06-5		AUC-16UU02958	CAP, cranking motor, commutator end, w/BEARING, assembly (AL-ML-1040S)	1
	G116-1537993	06-5		AUC-16UU02885	CLIP, cranking motor brush holder post (AL-GT-41) (part of KIT, repair, AUC-16UUA03054)	2

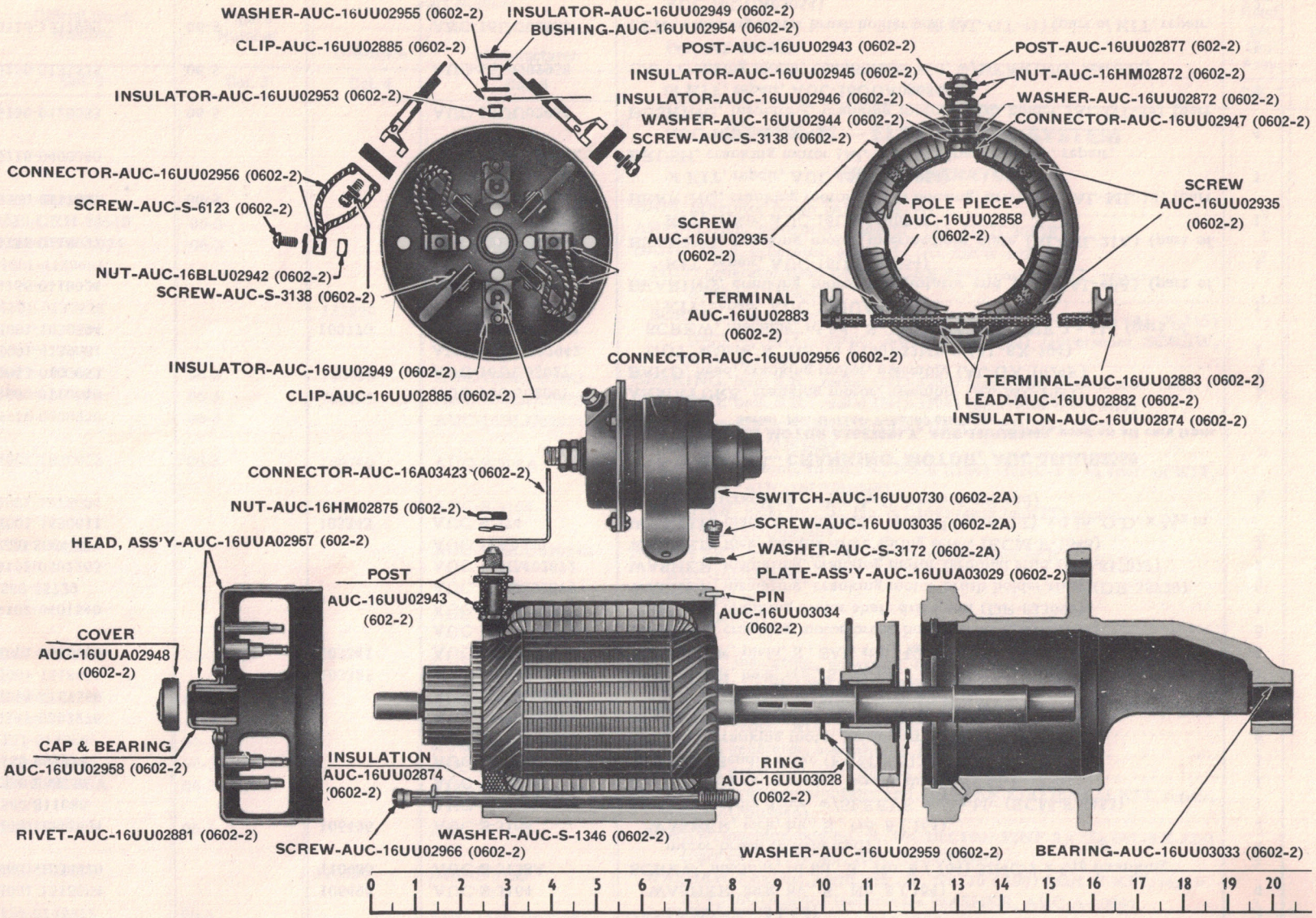

FIGURE 06-5 CRANKING MOTOR RA PD 346198

Note Symbol	Official Stock Number	Figure Number	Part Number		ITEM	Quan. Reqd. per Unit Assy.	Unit Price
			Ordnance	Manufacturer			
Col. 1	Col. 2	Col. 3	Col. 4	Col. 5	Col. 6	Col. 7	Col. 8
					0602-2 — CRANKING MOTOR — Continued		
	G156-0139787			AUC-16UUA02871	COIL, field, cranking motor, lower left (AL-ML-1009) (part of KIT, repair, AUC-16UUA03053)	1	
	G156-0139786			AUC-16UUA02869	COIL, field, cranking motor, lower right (AL-ML-1008) (part of KIT, repair, AUC-16UUA03053)	1	
	G156-0139785			AUC-16UU02871	COIL, field, cranking motor, upper left (AL-ML-1007) (part of KIT, repair, AUC-16UUA03053)	1	
	G156-0139788			AUC-16UU02869	COIL, field, cranking motor, upper right (AL-ML-1010) (part of KIT, repair, AUC-16UUA03053)	1	
	G156-0139924	06-5		AUC-16UU02947	CONNECTOR, cranking motor terminal post (AL-MH-28) (part of KIT, repair, AUC-16UUA03053)	1	
	G509-0140056	06-5		AUC-16A03423	CONNECTOR, cranking motor to magnetic switch (AL-SS-183)	1	
	G156-0139225	06-5		AUC-16UU02956	CONNECTOR, ground, cranking motor (AL-MH-53) (part of KIT, repair, AUC-16UUA03054)	2	
	G116-1540188			AUC-16UU02948	COVER, bearing, cranking motor commutator end head (AL-MG-1084S) (part of KIT, repair, AUC-16UUA03054) (superseded by COVER, AUC-16UUA02948)	1	
		06-5		AUC-16UUA02948	COVER, bearing, cranking motor commutator end head (AL-MR-1062A) (supersedes COVER, AUC-16UU02948)	1	
	2850-A-2273			AUC-16UU0880	DRIVE, cranking motor, assembly (ECM-A-2273) (superseded by DRIVE, assembly, AUC-16FE0880)	1	
	G505-0156200			AUC-16FE0880	DRIVE, cranking motor, assembly (ECM-A-2273) (supersedes DRIVE, assembly, AUC-16UU0880)	1	
					(Composed of:		
				AUC-16FE0595	1 HEAD		
				AUC-16A02623	1 SCREW		
				AUC-16FE0592	1 SCREW		
				AUC-16FE0593	1 SCREW		
				AUC-16UU02004	1 SHAFT, w/SLEEVE, assembly		
				AUC-16FE0594	1 SLEEVE		
				AUC-16FE0538	1 SPRING		
				AUC-16A02622	1 STOP		
				AUC-16FE0539	2 WASHER)		
	G509-0188372			AUC-16UUB02857	FRAME, cranking motor, w/FIELD, assembly (AL-ML-2110)	1	
					(Composed of:		
				AUC-16UUA02871	1 COIL		
				AUC-16UUA02869	1 COIL		

Note Symbol	Official Stock Number	Figure Number	Part Number		ITEM	Quan. Reqd. per Unit Assy.	Unit Price
			Ordnance	Manufacturer			
Col. 1	Col. 2	Col. 3	Col. 4	Col. 5	Col. 6	Col. 7	Col. 8
					0602-2 — CRANKING MOTOR — Continued		
				AUC-16UU02871	1 COIL		
				AUC-16UU02869	1 COIL		
				AUC-16UU02882	1 LEAD, assembly		
				AUC-16UU02858	4 POLE PIECE		
				AUC-16UU02935	4 SCREW)		
	2850-F-1542	06-6		AUC-16FE0995	HEAD, Bendix drive (ECM-F-1542)	1	
	G156-0211412			AUC-16UU02859	HEAD, cranking motor, commutator end, assembly (AL-ML-2090)	1	
					(Includes:		
				AUC-16UU02952	4 HOLDER, brush		
				AUC-16UU02949	2 INSULATOR)		
	G116-1611414			AUC-16UU02957	HEAD, cranking motor, commutator end, partial assembly (AL-ML-1090S) (superseded by HEAD, assembly, AUC-16UUA02957)	1	
		06-5		AUC-16UUA02957	HEAD, cranking motor, commutator end, partial assembly (AL-MR-1005) (supersedes HEAD, assembly, AUC-16UU02957)	1	
					(Includes:		
				AUC-16UU02958	1 CAP, assembly		
				AUC-16UU02881	4 RIVET)		
	2980-GT-14			AUC-16UU02952	HOLDER, brush, cranking motor (AL-GT-14) (part of KIT, repair, AUC-16UUA03054)	4	
	G509-0217881			AUC-16UU03032	HOUSING, pinion, cranking motor, assembly (AL-PS-1081C)	1	
					(Includes:		
				AUC-16UU03033	1 BEARING		
				AUC-16UU03034	1 PIN, dowel)		
	G104-1632782	06-5		AUC-16UU02874	INSULATION, cranking motor field lead (AL-MR-32) (part of KIT, repair, AUC-16UUA03053)	1	
	G156-0232825	06-5		AUC-16UU02945	INSULATOR, cranking motor terminal post cover (AL-MG-69) (part of KIT, repair, AUC-16UUA03053)	1	
	G156-0232826	06-5		AUC-16UU02946	INSULATOR, cranking motor terminal post frame (AL-MG-70) (part of KIT, repair, AUC-16UUA03053)	1	
	G156-0232827	06-5		AUC-16UU02949	INSULATOR, spacing, cranking motor brush holder (AL-GK-162) (part of KIT, repair, AUC-16UUA03054)	2	
	G156-0232830	06-5		AUC-16UU02953	INSULATOR, spring, cranking motor (AL-GT-32) (part of KIT, repair, AUC-16UUA03054)	2	

H-1	H001-0518015		106750	AUC-S-2306	KEY, Woodruff, S., 5/32 x 5/8 (No. 505) (cranking motor Bendix drive head) (part of KIT, repair, AUC-16UUA03055)	2
	2980-KIT-21			AUC-16UUA03054	KIT, repair, cranking motor brush and bushing (AL-21)	1
					(Composed of:	
				AUC-16UU02868	1 BEARING, commutator end	
				AUC-16UU03033	1 BEARING, housing, drive end	
				AUC-16UU03031	1 BEARING, intermediate plate	
				AUC-16UU02865	4 BRUSH	
				AUC-16UU02954	2 BUSHING, insulating, brush holder	
				AUC-16UU02885	2 CLIP, brush holder post	
				AUC-16UU02956	2 CONNECTOR, ground	
				AUC-16UU02948	1 COVER, bearing	
				AUC-16UU02952	4 HOLDER, brush	
				AUC-16UU02949	2 INSULATOR, brush holder spacing	
				AUC-16UU02953	2 INSULATOR, spring	
				AUC-16BLU02942	2 NUT, ground brush lead	
				AUC-16BLU02942	1 NUT, head band mounting screw	
				AUC-S-6132	2 SCREW, ground brush lead	
				AUC-16BLU02941	1 SCREW, mounting, head band	
				AUC-S-3138	4 SCREW, wire clip	
				AUC-16UU02866	4 SPRING, brush	
				AUC-16UU02955	2 WASHER, insulating, brush holder	
				AUC-S-3164	4 WASHER, lock, wire clip screw	
				AUC-16UU02959	2 WASHER, plain, thrust)	
	2980-F-4529			AUC-16UUA03055	KIT, repair, cranking motor drive (ECM-F-4529)	1
					(Composed of:	
				AUC-S-2306	1 KEY, Woodruff, armature shaft	
				AUC-16FE0593	1 SCREW, head spring	
				AUC-16FE0592	1 SCREW, shaft spring	
				AUC-16FE0594	1 SLEEVE, service	
				AUC-16FE0538	1 SPRING, drive	
				AUC-16FE0539	2 WASHER, lock)	
	2980-KIT-23			AUC-16UUA03053	KIT, repair, cranking motor field coil (AL-23)	1
					(Composed of:	
				AUC-16UUA02871	1 COIL, field, lower left	
				AUC-16UUA02869	1 COIL, field, lower right	
				AUC-16UU02871	1 COIL, field, upper left	
				AUC-16UU02869	1 COIL, field, upper right	
				AUC-16UU02947	1 CONNECTOR, terminal post	
				AUC-16UU02874	1 INSULATION, field lead	
				AUC-16UU02945	1 INSULATOR, terminal post cover	
				AUC-16UU02946	1 INSULATOR, terminal post frame	
				AUC-16HM02875	2 NUT, terminal post	
				AUC-16UU02877	1 POST, terminal	

Note Symbol	Official Stock Number	Figure Number	Part Number		ITEM	Quan. Reqd. per Unit Assy.	Unit Price
			Ordnance	Manufacturer			
Col. 1	Col. 2	Col. 3	Col. 4	Col. 5	Col. 6	Col. 7	Col. 8
					0602-2 — CRANKING MOTOR — Continued		
				AUC-16UU02935	4 SCREW, pole piece		
				AUC-16UU02872	2 WASHER, insulating, terminal post		
				AUC-S-1347	2 WASHER, lock, terminal post		
				AUC-16UU02944	1 WASHER, plain, terminal post)		
	G156-0273805	06-5		AUC-16UU02882	LEAD, cranking motor field coil, assembly (AL-MO-17)	1	
	G510-0295865	01-1, 06-5		AUC-16UUB3560	MOTOR, cranking, assembly (AL-ML-4209) (supersedes MOTOR, assembly, AUC-16HM4560—see 0602-1)	1	
H-1	H001-4139681			AUC-16BLU02942	NUT, cranking motor ground brush lead (AL-8X-794) (part of KIT, repair, AUC-16UUA03054)	2	
H-1	H001-4139681	06-5		AUC-16BLU02942	NUT, cranking motor head band mounting screw (AL-8X-794) (part of KIT, repair, AUC-16UUA00354)	1	
	G116-1714742	06-5		AUC-16HM02875	NUT, cranking motor terminal post (AL-5X-179) (part of KIT, repair, AUC-16UUA03053)	2	
	G067-0904050	06-5		AUC-16UU03034	PIN, dowel, cranking motor pinion housing (AL-MN-21)	1	
	G509-0340303			AUC-16UU03029	PLATE, intermediate, cranking motor, w/BEARING, assembly (AL-ML-1094A) (superseded by PLATE, assembly, AUC-16UUA03029)	1	
	2980-ML-1094	06-5		AUC-16UUA03029	PLATE, intermediate, cranking motor, w/BEARING, assembly (AL-ML-1094) (supersedes PLATE, assembly, AUC-16UU03029)	1	
	G116-1741401			AUC-16UU02858	POLE PIECE, cranking motor (AL-MH-29)	4	
	G067-0905020	06-5		AUC-16UU02935	SCREW, cranking motor pole piece (AL-GK-38) (part of KIT, repair, AUC-16UUA03053)	4	
	G116-1742417	06-5		AUC-16UU02877	POST, terminal, cranking motor (AL-MG-27) (part of KIT, repair, AUC-16UUA03053)	1	
	G156-0342426	06-5		AUC-16UU02943	POST, terminal, cranking motor, assembly (AL-MH-3028)	1	
	G509-0369535	06-5		AUC-16UU03028	RING, lock, cranking motor intermediate bearing (AL-ML-95)	1	
	G116-1770089	06-5		AUC-16UU02881	RIVET, cranking motor cap, commutator end (AL-8X-1452)	4	
		06-6		AUC-16A02623	SCREW, Bendix drive pinion back stop (ECM-F-1713)	1	
	G147-0124265	06-6		AUC-16FE0593	SCREW, cranking motor Bendix drive head spring (ECM-F-3077) (part of KIT, repair, AUC-16UUA03055)	1	
	G147-0383098	06-6		AUC-16FE0592	SCREW, cranking motor Bendix drive shaft spring (ECM-F-3076) (part of KIT, repair, AUC-16UUA03055)	1	
	G156-0382038	06-5		AUC-16UU02966	SCREW, cranking motor frame (AL-MH-20)	2	
H-1	H001-1518008	06-5	103320	AUC-S-1346	WASHER, lock, reg., S., 5/16 in.	2	
H-1	H001-5125851	06-5		AUC-S-3138	SCREW, cranking motor wire clip (AL-8X-122) (part of KIT, repair, AUC-16UUA03054)	4	

H-1	H001-5148831	06-5	100763	AUC-S-6132	SCREW, machine, rd-hd., S., No. 10 (.190)-32NF-2 x 3/8 (cranking motor ground brush lead) (part of KIT, repair, AUC-16UUA03054)	2
		06-6		AUC-16FE02004	SHAFT, Bendix drive, w/SLEEVE, assembly (ECM-F-3606)	1
		06-6		AUC-16FE0594	SLEEVE, compression, cranking motor Bendix drive (ECM-F-1757) (part of KIT, repair, AUC-16UUA03055)	1
	G156-0389829			AUC-16UU02866	SPRING, brush, cranking motor (AL-MG-74) (part of KIT, repair, AUC-16UUA03054)	4
	G147-0389813	06-6		AUC-16FE0538	SPRING, cranking motor Bendix drive (ECM-F-3159) (part of KIT, repair, AUC-16UUA03055)	1
		06-6		AUC-16A02622	STOP, Bendix drive pinion (ECM-F-1712)	1
	G116-1798796	06-5		AUC-16UU02883	TERMINAL, cranking motor field coil lead (AL-X-983)	2
	G156-0443079	06-5		AUC-16UU02955	WASHER, insulating, cranking motor brush holder (AL-GT-37) (part of KIT, repair, AUC-16UUA03054)	2
	G156-0443059	06-5		AUC-16UU02872	WASHER, insulating, cranking motor terminal post (AL-MG-68) (part of KIT, repair, AUC-16UUA03053)	2
	G067-0906040	06-6		AUC-16FE0539	WASHER, lock, cranking motor Bendix drive spring screw (ECM-F-3073) (part of KIT, repair, AUC-16UUA03055)	2
H-1	H001-1518004		106496	AUC-S-3164	WASHER, lock, hv., S., No. 8 (cranking motor wire clip screw) (part of KIT, repair, AUC-16UUA03054)	4
H-1	H001-1518009		103321	AUC-S-1347	WASHER, lock, reg., S., 3/8 in. (cranking motor terminal post) (part of KIT, repair, AUC-16UUA03053)	2
H-1	H001-1518005		106497	AUC-W-7508	WASHER, lock, reg., S., No. 10 (cranking motor ground)	2
	G116-1843101	06-5		AUC-16UU02944	WASHER, plain, cranking motor terminal post, inner (AL-MG-22) (part of KIT, repair, AUC-16UUA03053)	1
	G116-1843058	06-5		AUC-16UU02959	WASHER, thrust, cranking motor armature shaft (AL-MG-61) (part of KIT, repair, AUC-16UUA03054)	2

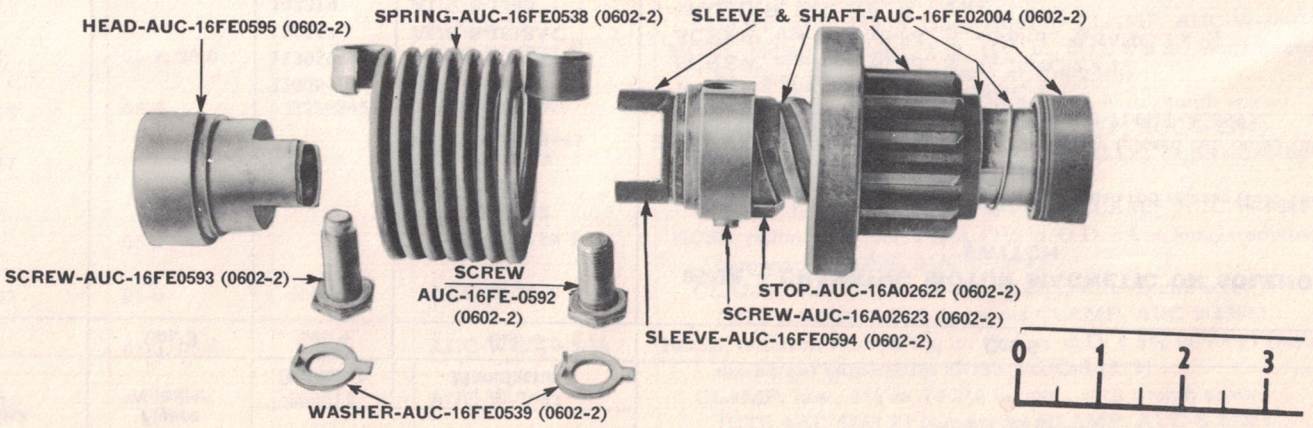

FIGURE 06-6 BENDIX DRIVE RA PD 346199

Note Symbol	Official Stock Number	Figure Number	Part Number		ITEM	Quan. Reqd. per Unit Assy.	Unit Price
			Ordnance	Manufacturer			
Col. 1	Col. 2	Col. 3	Col. 4	Col. 5	Col. 6	Col. 7	Col. 8
					0602A — CRANKING MOTOR MAGNETIC OR SOLENOID SWITCH		
	2580-1855497			AUC-A-1046	ARM, cranking motor series parallel switch push rod release (DR-1855497) (part of KIT, repair, AUC-16UU03052)	2	
				AUC-16UKS3443	BRACKET, cranking motor switch, assembly (closed cab only) (used on all cars up to and including Serial No. U-7144-T-A5399)	1	
H-1	H001-0718001		220064	AUC-S-76	NUT, reg., hex., s-fin., S., 1/4-20NC-2	2	
H-1	H001-1030138		113959	AUC-S-1607A	SCREW, machine, rd-hd., S., 1/4-20NC-2 x 1	2	
H-1	H001-5151521		133153	AUC-S-1618AC	SCREW, machine, rd-hd., S., cd-pltd., 3/8-16NC-2 x 3/4	2	
H-1	H001-1518007		103319	AUC-S-1345	WASHER, lock, reg., S., 1/4 in.	4	
H-1	H001-1518009		103321	AUC-S-1347	WASHER, lock, reg., S., 3/8 in.	2	
				AUC-16UKSF3443	BRACKET, cranking motor switch, assembly (open cab only)	1	
H-1	H001-0718001		220064	AUC-S-76	NUT, reg., hex., s-fin., S., 1/4-20NC-2	2	
H-1	H001-1030138		113959	AUC-S-1607A	SCREW, machine, rd-hd., S., 1/4-20NC-2 x 1	2	
H-1	H001-5151521		133153	AUC-S-1618AC	SCREW, machine, rd-hd., S., cd-pltd., 3/8-16NC-2 x 3/4	2	
H-1	H001-1030164		114701	AUC-S-1618A	SCREW, machine, rd-hd., S., 3/8-16NC-2 x 3/4	2	
H-1	H001-1518007		103319	AUC-S-1345	WASHER, lock, reg., S., 1/4 in.	4	
H-1	H001-1518009		103321	AUC-S-1347	WASHER, lock, reg., S., 3/8 in.	2	
	2580-1869036			AUC-A-1047	BUSHING, insulating, cranking motor series parallel switch cover (DR-1869036) (part of KIT, repair, AUC-16UU03052)	2	
	2580-1845396			AUC-A-1048	BUSHING, insulating, cranking motor series parallel switch terminal stud (DR-1845396) (part of KIT, repair, AUC-16UU03052)	1	
	2580-1862172			AUC-A-1049	CLIP, cranking motor series parallel switch "A" negative terminal (DR-1862172) (part of KIT, repair, AUC-16UU03052)	1	
	G104-1538116			AUC-A-1050	CLIP, cranking motor series parallel switch spring terminal stud (DR-1869595) (part of KIT, repair, AUC-16UU03052)	2	
				AUC-A-1051	CLIP, cranking motor series parallel switch terminal (DR-1867662) (part of KIT, repair, AUC-16UU03052)	1	
	G512-0139785			AUC-16UUB02871	COIL, cranking motor magnetic switch (DR-1862901)	1	
	2580-820657			AUC-A-1064	COVER, cranking motor magnetic switch push rod (DR-820657) (part of KIT, repair, AUC-16UUA0730)	1	
	2580-1869034			AUC-A-1052	GASKET, cranking motor series parallel switch cover (DR-1869034) (part of KIT, repair, AUC-16UU03052)	1	
	2580-1869035			AUC-A-1053	INSULATOR, cranking motor series parallel switch cover (DR-1869035) (part of KIT, repair, AUC-16UU03052)	1	

	2580-1901231			AUC-16UUA0730	KIT, repair, cranking motor magnetic switch (DR-1901231)	1
					(Composed of:	
				AUC-A-1064	1 COVER, push rod	
				AUC-A-1065	3 NUT, base mounting screw	
				AUC-A-1066	1 PIN, push rod	
				AUC-A-1067	1 ROD, w/CONTACT, assembly	
				AUC-A-1068	3 SCREW, base mounting	
				AUC-A-1069	1 SPRING, push rod	
				AUC-W-7508	3 WASHER, lock, base mounting screw)	
	2580-1900554			AUC-16UU03052	KIT, repair, series parallel switch (DR-1900554)	1
					(Composed of:	
				AUC-A-1046	2 ARM, push rod release	
				AUC-A-1047	2 BUSHING, cover insulation	
				AUC-A-1048	1 BUSHING, insulating, terminal stud	
				AUC-A-1049	1 CLIP, terminal ("A" negative terminal)	
				AUC-A-1050	2 CLIP, terminal (spring terminal stud)	
				AUC-A-1051	1 CLIP, terminal (switch terminal)	
				AUC-A-1052	1 GASKET, cover (soft rubber)	
				AUC-A-1053	1 INSULATOR, cover (under cover)	
				AUC-A-1054	1 NUT, contact mounting	
				AUC-A-1055	2 PIN, push rod release arm	
				AUC-A-1056	4 SCREW, mounting, terminal plate	
				AUC-A-1057	1 SPRING, contact cushion	
				AUC-A-1058	1 SPRING, push rod release arm	
				AUC-A-1059	2 STUD, spring terminal, w/EXTENSION	
				AUC-A-1060	1 WASHER, contact cushion spring retainer	
				AUC-A-1061	2 WASHER, insulating, terminal stud	
				AUC-W-7508	4 WASHER, lock, terminal plate mounting screw	
				AUC-A-1063	4 WASHER, plain, terminal plate mounting screw)	
H-1	H001-4135681		120614	AUC-A-1065	NUT, cranking motor magnetic switch base mounting screw (DR-120614) (part of KIT, repair, AUC-16UUA0730)	3
				AUC-A-1054	NUT, cranking motor series parallel switch contact mounting (DR-1869851) (part of KIT, repair, AUC-16UU03052)	1
	2580-825229			AUC-A-1066	PIN, cranking motor magnetic switch push rod (DR-825229) (part of KIT, repair, AUC-16UUA0730)	1
	2580-1855498			AUC-A-1055	PIN, cranking motor series parallel switch push rod release arm (DR-1855498) (part of KIT, repair, AUC-16UU03052)	2
	2580-1843456			AUC-A-1067	ROD, cranking motor magnetic switch, w/CONTACT, assembly (DR-1843456) (part of KIT, repair, AUC-16UUA0730)	1
	G103-0501834			AUC-A-1068	SCREW, mounting, cranking motor magnetic switch base (DR-1866970) (part of KIT, repair, AUC-16UUA0730)	3
				AUC-A-1056	SCREW, mounting, cranking motor series parallel switch terminal plate (DR-132123) (part of KIT, repair, AUC-16UU03052)	4
	2580-825227			AUC-A-1069	SPRING, cranking motor magnetic switch push rod (DR-825227) (part of KIT, repair, AUC-16UUA0730)	1

Note Symbol	Official Stock Number	Figure Number	Part Number		ITEM	Quan. Reqd. per Unit Assy.	Unit Price
			Ordnance	Manufacturer			
Col. 1	Col. 2	Col. 3	Col. 4	Col. 5	Col. 6	Col. 7	Col. 8
					0602A — CRANKING MOTOR MAGNETIC OR SOLENOID SWITCH — Continued		
	2580-1847240			AUC-A-1057	SPRING, cranking motor series parallel switch contact cushion (DR-1847240) (part of KIT, repair, AUC-16UU03052)	1	
	2580-1855499			AUC-A-1058	SPRING, cranking motor series parallel switch push rod release arm (DR-1855499) (part of KIT, repair, AUC-16UU03052)	1	
				AUC-A-1059	STUD, cranking motor series parallel switch spring terminal, w/EXTENSION (DR-1874705) (part of KIT, repair, AUC-16UU03052)	2	
	2580-1455			AUC-16UP0730	SWITCH, magnetic, cranking motor, assembly (DR-1455) (closed cab only) (used on all cars up to and including Serial No. U-7144-T-A5399) (superseded by SWITCH, assembly, AUC-16UU0730)	1	
	G510-0393787	01-1, 06-5		AUC-16UU0730	SWITCH, magnetic, cranking motor, assembly (DR-1118008) (open cab only) (used on all cars from U-7144-T-A5400 and up) (supersedes SWITCH, assembly, AUC-16UP0730) (use with MOTOR, cranking, assembly, AUC-16UUB3560, only)	1	
		06-5		AUC-16UU03035	SCREW, mounting, cranking motor switch (AL-X-877)	2	
H-1	H001-7017620	06-5	114604	AUC-S-3172	WASHER, lock, ext. teeth, reg., S., 1/4 in.	2	
	G150-0393775			AUC-16L3730	SWITCH, magnetic, cranking motor, assembly (DR-1422) (use with MOTOR, cranking, assembly, AUC-16HM4560, only)	1	
	G510-0393785			AUC-16UP0680	SWITCH, series-parallel, cranking motor, assembly (DR-407J)	1	
H-1	H001-1013017		216920	AUC-S-14	SCREW, cap, hex-hd., S., 5/16-18NC-2 x 3/4	2	
H-1	H001-1518008		103320	AUC-S-1346	WASHER, lock, reg., S., 5/16 in.	2	
H-1	H001-1518005		106497	AUC-A-1070	WASHER, cranking motor magnetic switch base mounting screw (DR-802731) (superseded by WASHER, AUC-W-7508)	3	
	G104-1842679			AUC-A-1060	WASHER, cranking motor series parallel switch contact cushion spring retainer (DR-1847239) (part of KIT, repair, AUC-16UU03052)	2	
H-1	H001-1518005		106497	AUC-A-1062	WASHER, cranking motor series parallel switch terminal plate mounting screw (DR-106497) (superseded by WASHER, AUC-W-7508)	4	
	G104-1842682			AUC-A-1061	WASHER, insulating, cranking motor series parallel switch terminal stud (DR-1855491) (part of KIT, repair, AUC-16UU03052)	2	
H-1	H001-1518005		106497	AUC-W-7508	WASHER, lock, reg., S., No. 10 (.190) (cranking motor magnetic switch base mounting screw) (part of KIT, repair, AUC-16UUA0730)	3	
H-1	H001-1518005		106497	AUC-W-7508	WASHER, lock, reg., S., No. 10 (.190) (cranking motor series parallel switch terminal plate mounting screw) (part of KIT, repair, AUC-16UU03052)	4	
	2580-807218			AUC-A-1063	WASHER, plain, cranking motor series parallel switch terminal plate mounting screw (DR-807218) (part of KIT, repair, AUC-16UU03052)	4	

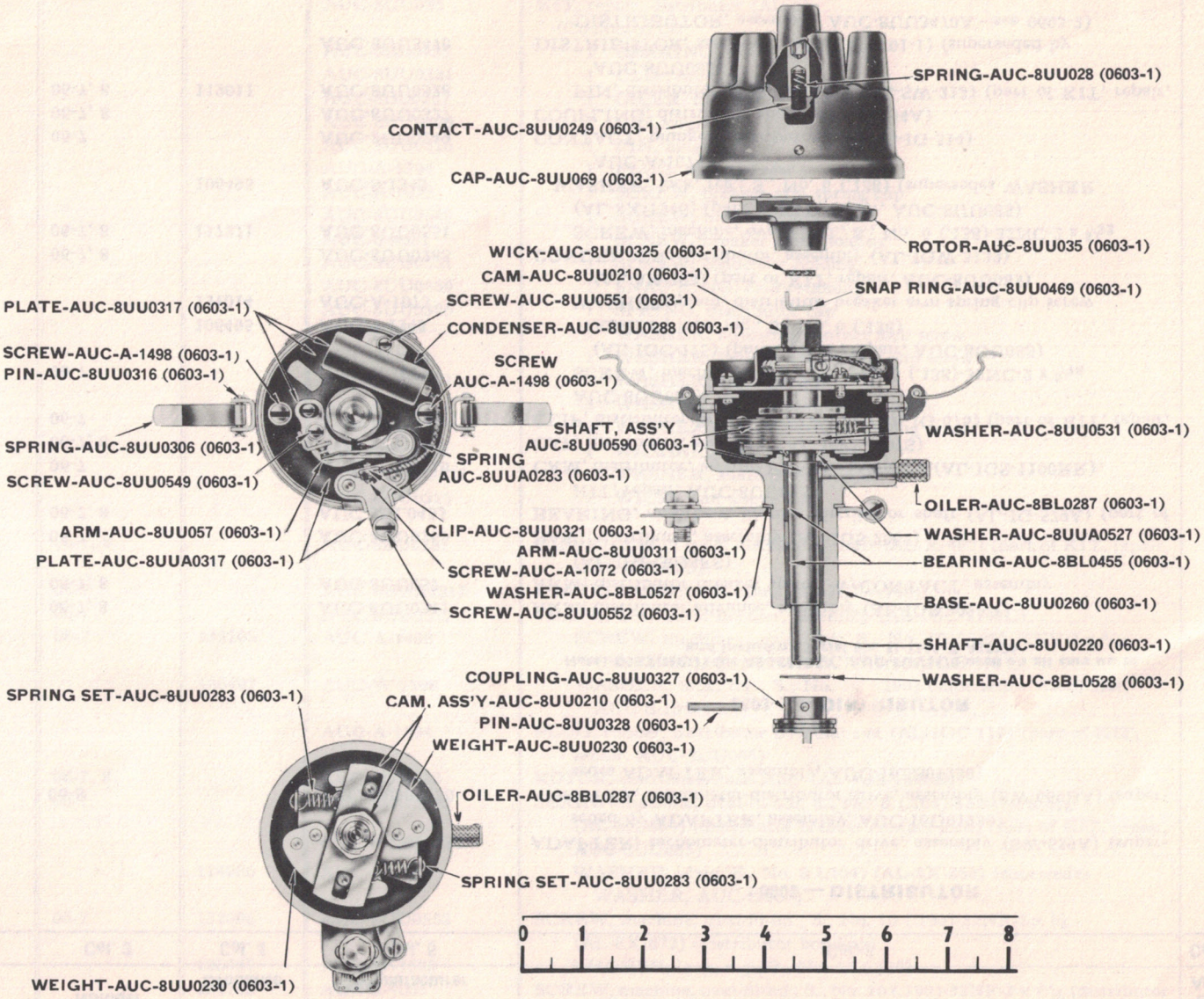

FIGURE 06-7 DISTRIBUTOR RA PD 346200

Note Symbol	Official Stock Number	Figure Number	Part Number		ITEM	Quan. Reqd. per Unit Assy.	Unit Price
			Ordnance	Manufacturer			
Col. 1	Col. 2	Col. 3	Col. 4	Col. 5	Col. 6	Col. 7	Col. 8
					0603 — DISTRIBUTOR		
				AUC-16ZB01230	ADAPTER, tachometer-distributor drive, assembly (SW-659A) (superseded by ADAPTER, assembly, AUC-16D01230)	1	
	8240-659BA	06-8		AUC-16D01230	ADAPTER, tachometer-distributor drive, assembly (SW-659BA) (supersedes ADAPTER, assembly, AUC-16ZB01230)	1	
					0603-1 — DISTRIBUTOR		
					Note: DISTRIBUTOR ASSEMBLY, AUC-8UU3470 used on all cars up to and including Serial No. U-7144-T-A10131		
	2980-IGS2020-1	06-7, 8		AUC-8UU0311	ARM, distributor advance, assembly (AL-IGS-2020-1)	1	
	G104-1783105	06-7, 8		AUC-8UU057	ARM, distributor breaker spring, w/CONTACT, assembly (AL-IGP-3028FS)	1	
	G116-1516015	06-7		AUC-8UU0260	BASE, distributor, assembly (AL-IGS-2062)	1	
	G104-1518120	06-7, 8		AUC-8BL0455	BEARING, absorbent bronze, distributor shaft (AL-IG-579A) (part of KIT, repair, AUC-8UU085)	2	
	G509-0340206	06-7		AUC-8UU0210	CAM, distributor, w/stop PLATE, assembly (AL-IGS-1100RR)	1	
	G067-0901489	06-7, 8		AUC-8UU069	CAP, distributor, assembly (AL-IGC-1107S)	1	
	G067-0901671	06-7		AUC-8UU0321	CLIP, distributor breaker arm spring (AL-IG-676) (part of KIT, repair, AUC-8UU085)	1	
	G116-1782009	06-7		AUC-A-1072	SCREW, machine, hex-hd., S., No. 6 (.138)-32NC-2 x 5/16 (AL-IGC-175) (part of KIT, repair, AUC-8UU085)	1	
H-1	H001-1518003		106495	AUC-S-1343	WASHER, lock, reg., S., No. 6 (.138)	1	
H-1	H001-7043561		131014	AUC-A-1073	WASHER, plain, distributor breaker arm spring clip screw (AL-8X-353) (part of KIT, repair, AUC-8UU085)	1	
	G067-0901889	06-7, 8		AUC-8UU0288	CONDENSER, distributor, assembly (AL-IGW-3139)	1	
H-1	H001-1026052	06-7, 8	117271	AUC-8UU0551	SCREW, machine, oval-fil-hd., S., No. 6 (.138)-32NC-2 x 5/32 (AL-8X-1546) (part of KIT, repair, AUC-8UU085)	1	
H-1	H001-1518003		106495	AUC-S-1343	WASHER, lock, reg., S., No. 6 (.138) (supersedes WASHER, AUC-A-1074)	1	
	G067-0904329	06-7		AUC-8UU0249	CONTACT, plunger, distributor cap (AL-IG-514)	1	
	G116-1540162	06-7, 8		AUC-8UU0327	COUPLING, distributor shaft (AL-IG-644A)	1	
H-1	H001-0829596	06-7, 8	112011	AUC-8UU0328	PIN, distributor shaft coupling (AL-SW-213) (part of KIT, repair, AUC-8UU085)	1	
	G510-0152065			AUC-8UU3470	DISTRIBUTOR, assembly (AL-IGC-4701-1) (superseded by DISTRIBUTOR, assembly, AUC-8UU3470A—see 0603-2)	1	

	2980-KIT-5			AUC-8UU085	KIT, repair, distributor (AL-5)	1
					(Composed of:	
				AUC-8BL0455	2 BEARING, distributor shaft	
				AUC-8UU0321	1 CLIP, breaker arm spring	
				AUC-8BL0287	1 OILER, distributor shaft	
				AUC-8UU0328	1 PIN, coupling	
				AUC-8UU0316	1 PIN, hinge	
				AUC-A-1394	1 PLUG, terminal slot	
				AUC-A-1072	1 SCREW, breaker arm spring clip	
				AUC-8UU0549	1 SCREW, breaker contact lock	
				AUC-S-4031	2 SCREW, breaker plate holding	
				AUC-8UU0551	1 SCREW, condenser holding	
				AUC-8UU0469	1 SNAP RING, cam retaining	
				AUC-8UU0306	1 SPRING, distributor cap	
				AUC-S-987	1 WASHER, adjusting contact lock screw	
				AUC-A-1073	1 WASHER, breaker arm spring clip screw	
				AUC-8UU0531	1 WASHER, cam spacing	
				AUC-S-1344	3 WASHER, lock, breaker plate screw	
				AUC-A-1074	2 WASHER, lock, condenser holding screw	
				AUC-8BL0528	1 WASHER, shaft thrust, lower	
				AUC-8UUA0527	1 WASHER, shaft thrust, upper	
				AUC-8UU0325	1 WICK, cam sleeve felt)	
	G067-0903990	06-7, 8		AUC-8BL0287	OILER, press-in type, distributor shaft (AL-X-490) (part of KIT, repair, AUC-8UU085)	1
	G121-0340277	06-7		AUC-8UUA0317	PLATE, distributor breaker (AL-IGC-1148)	1
	G121-0340306	06-7		AUC-8UU0317	PLATE, distributor breaker, assembly (AL-IGC-2148C)	1
H-1	H001-5127331	06-7	132105	AUC-A-1498	SCREW, machine, oval-fil-hd., S., No. 10 (.190)-32NF-2 x 5/16 (AL-8X-870) (supersedes SCREW, AUC-S-4031)	2
H-1	H001-1518005		106497	AUC-W-7508	WASHER, lock, reg., S., No. 10 (.190) (supersedes WASHER, AUC-S-1344)	2
	G179-0180168			AUC-A-1394	PLUG, rubber, distributor terminal slot (AL-IGC-117) (part of KIT, repair, AUC-8UU085)	1
	G116-1773638	06-7, 8		AUC-8UU035	ROTOR, distributor, assembly (AL-IGS-1016B)	1
	G067-3381992	06-7		AUC-8UU0549	SCREW, machine, oval-fil-hd., S., No. 8 (.164)-32NC-2 x 3/16 (AL-8X-884) (distributor breaker contact lock) (part of KIT, repair, AUC-8UU085)	1
H-1	H001-1530004		114986	AUC-A-1412	WASHER, plain, S., No. 8 (.164) (AL-8X-350) (supersedes WASHER, AUC-S-987)	1
H-1	H001-5127311	06-7	132096	AUC-8UU0552	SCREW, machine, oval-fil-hd., S., No. 10 (.190)-32NF-2 x 1/4 (AL-8X-872) (distributor bonding)	1
H-1	H001-1518005		106497	AUC-W-7508	WASHER, lock, reg., S., No. 10 (.190)	1
H-1	H001-5127331		132105	AUC-S-4031	SCREW, machine, oval-fil-hd., S., No. 10 (.190)-32NF-2 x 5/16 (distributor breaker plate) (part of KIT, repair, AUC-8UU085) (superseded by SCREW, AUC-A-1498)	2
	G509-0383758	06-7		AUC-8UU0220	SHAFT, distributor (AL-IGC-1130R)	1

Note Symbol	Official Stock Number	Figure Number	Part Number		ITEM	Quan. Reqd. per Unit Assy.	Unit Price
			Ordnance	Manufacturer			
Col. 1	Col. 2	Col. 3	Col. 4	Col. 5	Col. 6	Col. 7	Col. 8
					0603-1 — DISTRIBUTOR — Continued		
	G509-0383759	06-7		AUC-8UU0590	SHAFT, distributor, w/GOVERNOR, assembly (AL-IGC-2130RB)	1	
	G067-0903749	06-7, 8		AUC-8UU0469	SNAP RING, distributor cam retaining (AL-IG-680) (part of KIT, repair, AUC-8UU085)	1	
	G067-0905419	06-7, 8		AUC-8UU028	SPRING, contact, distributor cap (AL-IG-515)	1	
	G121-0389891	06-7		AUC-8UUA0283	SPRING, distributor breaker arm (AL-IGP-30)	1	
	G121-0389890	06-7		AUC-8UU0306	SPRING, distributor cap holding (AL-IG-694) (part of KIT, repair, AUC-8UU085)	2	
	G067-0904036	06-7		AUC-8UU0316	PIN, hinge, cap holding spring (AL-X-1448) (part of KIT, repair, AUC-8UU085)	2	
	2980-IGE29S	06-7		AUC-8UU0283	SPRING SET, distributor governor weight (AL-IGE-29S)	1	
	G067-0906491	06-7, 8		AUC-8UU0531	WASHER, distributor cam spacing (AL-IGS-99) (part of KIT, repair, AUC-8UU085)	1	
H-1	H001-1518003		106495	AUC-A-1074	WASHER, lock, reg., S., No. 6 (.138) (distributor condenser mounting screw) (part of KIT, repair, AUC-8UU085) (superseded by WASHER, AUC-S-1343)	1	
H-1	H001-1518005		106497	AUC-S-1344	WASHER, lock, reg., S., No. 12 (.216) (distributor breaker plate) (part of KIT, repair, AUC-8UU085) (superseded by WASHER, AUC-W-7508)	2	
H-1	H001-1530004		114986	AUC-S-987	WASHER, plain, S., No. 8 (.164) (distributor breaker contact lock screw) (part of KIT, repair, AUC-8UU085) (superseded by WASHER, AUC-A-1412)	1	
	G067-0906980	06-7		AUC-8BL0527	WASHER, thrust, distributor advance arm (AL-IG-816A)	1	
	G067-3442601	06-7, 8		AUC-8BL0528	WASHER, thrust, distributor shaft, lower (AL-IG-90) (part of KIT, repair, AUC-8UU085)	1	
	G067-0906960	06-7		AUC-8UUA0527	WASHER, thrust, distributor shaft, upper (AL-IGS-104) (part of KIT, repair, AUC-8UU085)	1	
	G509-0445204	06-7		AUC-8UU0230	WEIGHT, distributor governor (AL-IG-1322)	2	
	G067-0906999	06-7, 8		AUC-8UU0325	WICK, felt, distributor cam sleeve (AL-IGH-28) (part of KIT, repair, AUC-8UU085)	1	
					0603-2 — DISTRIBUTOR		
					Note: DISTRIBUTOR ASSEMBLY, AUC-8UU3470A used on all cars from Serial No. U-7144-T-A10132 and up		
	2980-IGS2020-1	06-7, 8		AUC-8UU0311	ARM, distributor advance, assembly (AL-IGS-2020-1)	1	
	G104-1783105	06-7, 8		AUC-8UU057	ARM, distributor breaker spring, w/CONTACT, assembly (AL-IGP-3028FS)	1	

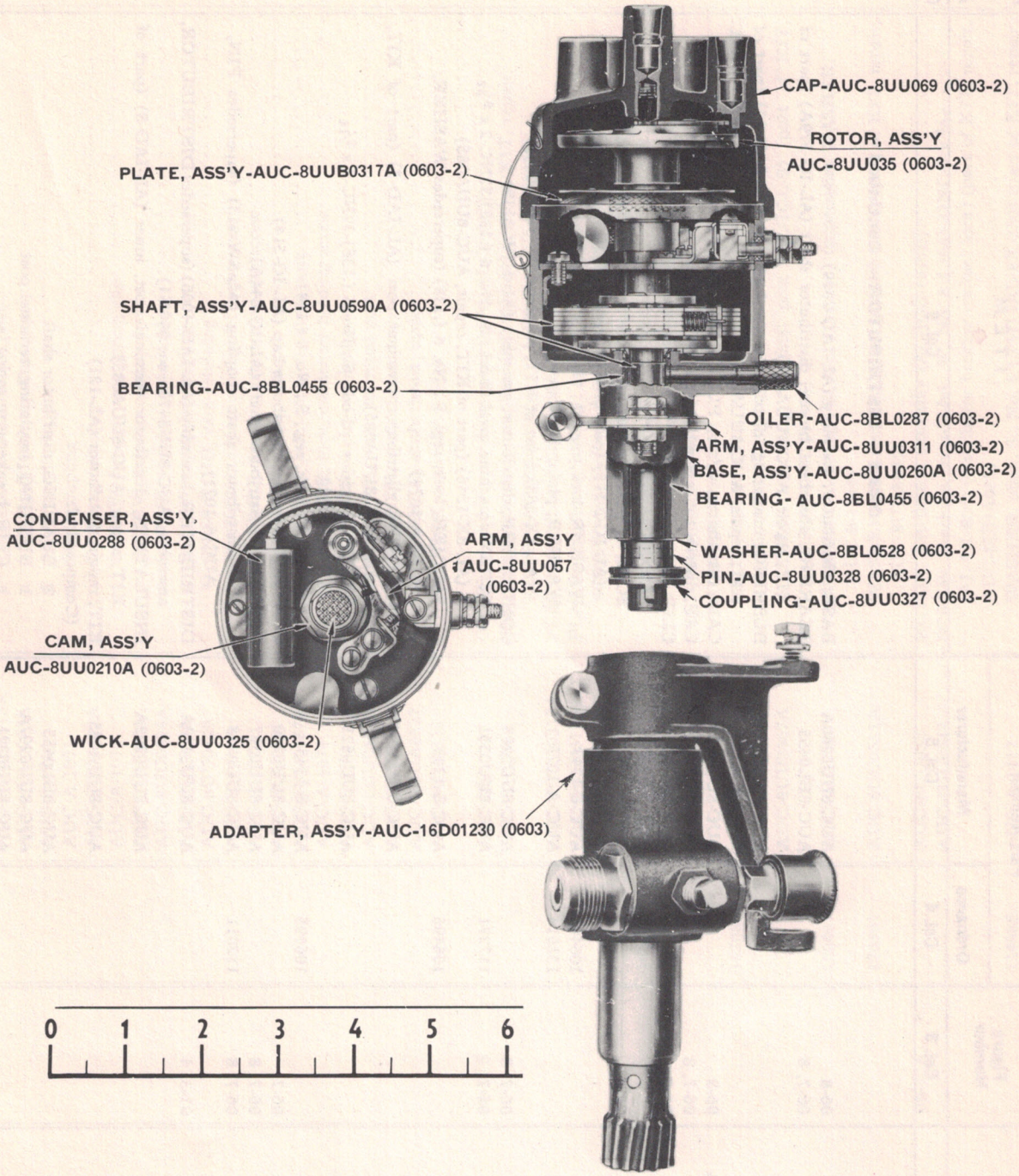

FIGURE 06-8 DISTRIBUTOR RA PD 346201

ORD 9, SNL G-510, G-691

Note Symbol	Official Stock Number	Figure Number	Part Number		ITEM	Quan. Reqd. per Unit Assy.	Unit Price
			Ordnance	Manufacturer			
Col. 1	Col. 2	Col. 3	Col. 4	Col. 5	Col. 6	Col. 7	Col. 8
					0603-2 — DISTRIBUTOR — Continued		
	2980-IAD2019	06-8		AUC-8UU0260A	BASE, distributor, assembly (AL-IAD-2019)	1	
	G104-1518120	06-7, 8		AUC-8BL0455	BEARING, absorbent bronze, distributor shaft (AL-IG-579A) (part of KIT, repair, AUC-8UUA085)	2	
	G104-2398811			AUC-8UU0297A	BUSHING, insulating, distributor terminal post (AL-IAD-10) (part of KIT, repair, AUC-8UUA085)	1	
	2980-IAD1100RA	06-8		AUC-8UU0210A	CAM, distributor, w/stop PLATE, assembly (AL-IAD-1100RA)	1	
	G067-0901489	06-7, 8		AUC-8UU069	CAP, distributor, assembly (AL-IGC-1107S)	1	
	G067-0901671	06-7		AUC-8UU0321	CLIP, distributor breaker arm spring (AL-IG-676) (part of KIT, repair, AUC-8UUA085)	1	
	G116-1782009	06-7		AUC-A-1072	SCREW, machine, hex-hd., S., No. 6 (.138)-32NC-2 x 5/16 (AL-IGC-175) (part of KIT, repair, AUC-8UUA085)	1	
H-1	H001-1518003		106495	AUC-S-1343	WASHER, lock, reg., S., No. 6 (.138)	1	
H-1	H001-7043561		131014	AUC-A-1073	WASHER, plain, distributor breaker arm spring clip screw (AL-8X-353) (part of KIT, repair, AUC-8UUA085)	1	
	G067-0901889	06-7, 8		AUC-8UU0288	CONDENSER, distributor, assembly (AL-IGW-3139)	1	
H-1	H001-1026052	06-7	117271	AUC-8UU0551	SCREW, machine, oval-fil-hd., S., No. 6 (.138)-32NC-2 x 5/32 (AL-8X-1546) (part of KIT, repair, AUC-8UUA085)	1	
H-1	H001-1518003		106495	AUC-S-1343	WASHER, lock, reg., S., No. 6 (.138) (supersedes WASHER, AUC-A-1074)	1	
	2980-IAD7			AUC-8UUA0472A	CONNECTOR, distributor terminal post (AL-IAD-7) (part of KIT, repair, AUC-8UUA085)	1	
H-1	H101-0132684			AUC-8UU0521A	SCREW, machine, rd-hd., S., No. 6 (.138)-32NC-2 x 3/16 (AL-8X-301)	1	
H-1	H001-1518003		106495	AUC-S-1343	WASHER, lock, reg., S., No. 6 (.138)	1	
	G067-0904329	06-7		AUC-8UU0249	CONTACT, plunger, distributor cap (AL-IG-514)	1	
	G116-1540162	06-7, 8		AUC-8UU0327	COUPLING, distributor shaft (AL-IG-644A)	1	
H-1	H001-0829596	06-7, 8	112011	AUC-8UU0328	PIN, distributor shaft coupling (AL-SW-213) (supersedes PIN, AUC-A-1071)	1	
	2980-IAD4006	01-3, 4		AUC-8UU3470A	DISTRIBUTOR, assembly (AL-IAD-4006) (supersedes DISTRIBUTOR, assembly, AUC-8UU3470—see 0603-1)	1	
	2980-IAD8			AUC-8UU0293A	INSULATION, distributor terminal post, inner (AL-IAD-8) (part of KIT, repair, AUC-8UUA085)	1	
	2980-KIT-121			AUC-8UUA085	KIT, repair, distributor (AL-121)	1	
					(Composed of:		
				AUC-8BL0455	2 BEARING, distributor shaft		
				AUC-8UU0297A	1 BUSHING, insulating, terminal post		
				AUC-8UU0321	1 CLIP, breaker arm spring		

				AUC-8UUA0472A	1 CONNECTOR, terminal post		
				AUC-8UU0293A	1 INSULATION, terminal post		
				AUC-S-3745	1 NUT, terminal post		
				AUC-A-1071	1 PIN, coupling		
				AUC-8UU0472A	1 POST, terminal		
				AUC-A-1072	1 SCREW, breaker arm spring clip		
				AUC-8UU0549	1 SCREW, breaker contact lock		
				AUC-8UU0534A	2 SCREW, breaker plate holding		
				AUC-8UU0551	1 SCREW, condenser holding		
				AUC-8UU0469	1 SNAP RING, cam retaining		
				AUC-A-1412	1 WASHER, adjusting contact lock screw		
				AUC-A-1073	1 WASHER, breaker arm spring clip screw		
				AUC-8UU0531	1 WASHER, cam spacing		
				AUC-8UU0467A	1 WASHER, insulating, terminal post		
				AUC-A-1074	2 WASHER, lock, condenser holding screw		
				AUC-S-1344	2 WASHER, lock, terminal post		
				AUC-8UU0531A	1 WASHER, plain, terminal post		
				AUC-8BL0528	1 WASHER, shaft thrust, lower		
				AUC-8UUA0527	1 WASHER, shaft thrust, upper		
				AUC-8UU0325	1 WICK, cam sleeve felt)		
	G067-0903990	06-7, 8		AUC-8BL0287	OILER, press-in type, distributor shaft (AL-X-490)	1	
	G104-1769910			AUC-A-1071	PIN, distributor shaft coupling (AL-GJ-236) (part of KIT, repair, AUC-8UUA085) (superseded by PIN, AUC-8UU0328)	1	
	2980-IAD1004			AUC-8UUA0317A	PLATE, distributor breaker (AL-IAD-1004)	1	
	2980-IAD2004			AUC-8UU0317A	PLATE, distributor breaker, assembly (AL-IAD-2004)	1	
	2980-X2878			AUC-8UU0534A	SCREW, machine, oval-fil-hd., No. 10 (.190)-32NF-2 x 5/16 (AL-X-2878) (part of KIT, repair, AUC-8UUA085)	2	
H-1	H001-1518005		106497	AUC-W-7508	WASHER, lock, reg., S., No. 10 (.190)	2	
	2980-IAD2015	06-8		AUC-8UUB0317A	PLATE, distributor seal, assembly (AL-IAD-2015)	1	
	G104-1742400			AUC-8UU0472A	POST, distributor terminal (AL-IGL-8) (part of KIT, repair, AUC-8UUA085)	1	
H-1	H001-0716610		103088	AUC-S-3745	NUT, machine screw, hex., S., No. 10 (.190)-32NF-1 (part of KIT, repair, AUC-8UUA085)	2	
	G104-1844677			AUC-8UU0467A	WASHER, insulating, terminal post (AL-IGL-9) (part of KIT, repair, AUC-8UUA085)	1	
H-1	H001-1518005		106497	AUC-W-7508	WASHER, lock, reg., S., No. 10 (.190) (supersedes WASHER, AUC-S-1344)	2	
H-1	H001-7043621		120391	AUC-8UU0531A	WASHER, plain, terminal post (AL-8X-183A) (part of KIT, repair, AUC-8UUA085)	1	
	G116-1773638	06-7, 8		AUC-8UU035	ROTOR, distributor, assembly (AL-IGS-1016B)	1	
	G067-3381992			AUC-8UU0549	SCREW, machine, oval-fil-hd., S., No. 8 (.164)-32NC-2 x 3/16 (AL-8X-884) (distributor breaker contact lock) (part of KIT, repair, AUC-8UUA085)	1	
H-1	H001-1530004		114986	AUC-A-1412	WASHER, plain, S., No. 8 (.164) (AL-8X-350) (part of KIT, repair, AUC-8UUA085)	1	

Note Symbol	Official Stock Number	Figure Number	Part Number		ITEM	Quan. Reqd. per Unit Assy.	Unit Price
			Ordnance	Manufacturer			
Col. 1	Col. 2	Col. 3	Col. 4	Col. 5	Col. 6	Col. 7	Col. 8
					0603-2 — DISTRIBUTOR — Continued		
H-1	H001-5127311		132096	AUC-8UU0552	SCREW, machine, oval-fil-hd., S., No. 10 (.190)-32NF-2 x 1/4 (AL-8X-872) (distributor bonding)	1	
H-1	H001-1518005		106497	AUC-W-7508	WASHER, lock, reg., S., No. 10 (.190)	1	
	2980-IGC1130RE			AUC-8UUA0220	SHAFT, distributor (AL-IGC-1130RE)	1	
	2980-IGC2130RL	06-8		AUC-8UU0590A	SHAFT, distributor, w/GOVERNOR, assembly (AL-IGC-2130RL)	1	
	G067-0903749	06-7		AUC-8UU0469	SNAP RING, distributor cam retaining (AL-IG-680) (part of KIT, repair, AUC-8UUA085)	1	
	G067-0905419	06-7		AUC-8UU028	SPRING, contact, distributor cap (AL-IG-515)	1	
	G121-0389891			AUC-8UUA0283	SPRING, distributor breaker arm (AL-IGP-30)	1	
				AUC-8UU0283A	SPRING SET, distributor governor weight (AL-IGC-24S)	1	
H-4	H004-0368050			AUC-8BL0314	TERMINAL, distributor high tension wire (AL-IG-94)	7	
	G067-0906491	06-7		AUC-8UU0531	WASHER, distributor cam spacing (AL-IGS-99) (part of KIT, repair, AUC-8UUA085)	1	
	2980-IAD12			AUC-8UU0589A	WASHER, felt, distributor seal plate (AL-IAD-12)	1	
H-1	H001-1518003		106495	AUC-A-1074	WASHER, lock, reg., S., No. 6 (.138) (distributor condenser mounting screw) (part of KIT, repair, AUC-8UUA085) (superseded by WASHER, AUC-S-1343)	1	
H-1	H001-1518006		106498	AUC-S-1344	WASHER, lock, reg., S., No. 12 (.216) (distributor terminal post) (part of KIT, repair, AUC-8UUA085) (superseded by WASHER, AUC-W-7508)	2	
	G067-0906980	06-7		AUC-8BL0527	WASHER, thrust, distributor advance arm (AL-IG-816A)	1	
	G067-3442601	06-7, 8		AUC-8BL0528	WASHER, thrust, distributor shaft, lower (AL-IG-90) (part of KIT, repair, AUC-8UUA085)	1	
	G067-0906960	06-7		AUC-8UUA0527	WASHER, thrust, distributor shaft, upper (AL-IGS-104) (part of KIT, repair, AUC-8UUA085)	1	
	G067-0906989			AUC-8UU0230A	WEIGHT, distributor governor (AL-IGC-2168R)	2	
	G067-0906999	06-7, 8		AUC-8UU0325	WICK, felt, distributor cam sleeve (AL-IGH-28) (part of KIT, repair, AUC-8UUA085)	1	
					0604 — IGNITION COIL		
	2980-IG-4090A			AUC-8BL0120A	COIL, ignition (AL-IG-4090A) (superseded by COIL, AUC-8BLA0120)	1	
	G510-0139784			AUC-8BLA0120	COIL, ignition (AL-IG-4070H) (supersedes COIL, AUC-8BL0120A)	1	
				AUC-S-7440C	SCREW, cap, hex-hd., S., cd-pltd., 5/16-18NC-2 x 1 1/4	2	
				AUC-12UUB9108	SPACER, cd-pltd., ignition coil	2	
H-1	H001-7021771		138538	AUC-S-7500C	WASHER, lock, int. teeth, reg., S., cd-pltd., 5/16 in.	2	

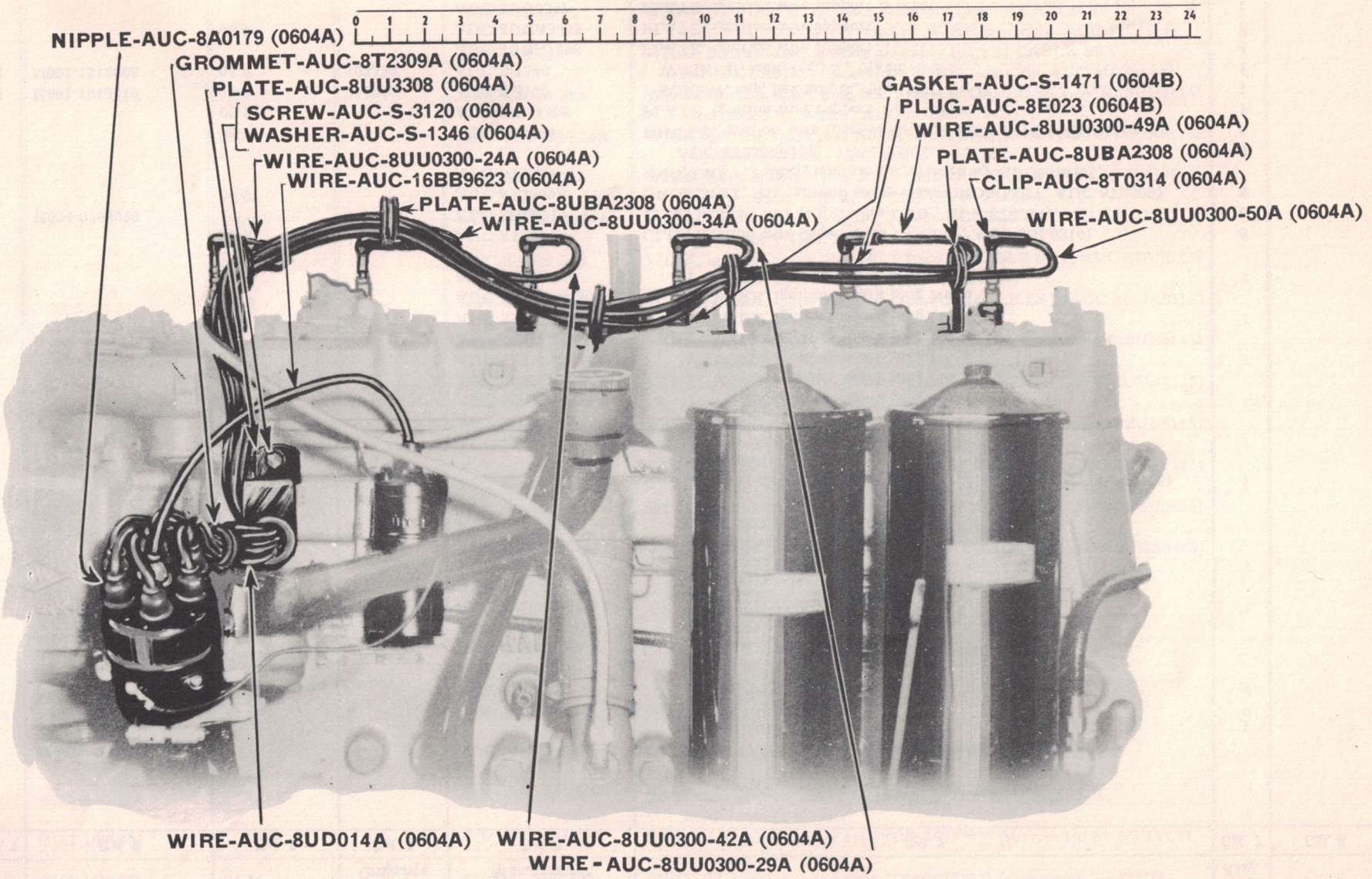

FIGURE 06-9 IGNITION WIRING RA PD 346202

Note Symbol	Official Stock Number	Figure Number	Part Number		ITEM	Quan. Reqd. per Unit Assy.	Unit Price
			Ordnance	Manufacturer			
Col. 1	Col. 2	Col. 3	Col. 4	Col. 5	Col. 6	Col. 7	Col. 8
					0604A — IGNITION WIRING		
	0600-8UU0115			AUC-8UU0115	CABLE SET, distributor (superseded by CABLE SET, AUC-8UUA0115)	1	
					(Composed of:		
				AUC-8A0179	8 NIPPLE, ignition wire		
				AUC-8UD014A	1 WIRE, high tension, assembly		
				AUC-8-0300-24A	1 WIRE, ignition, spark plug No. 1		
				AUC-8-0300-29A	1 WIRE, ignition, spark plug No. 2		
				AUC-8-0300-34A	1 WIRE, ignition, spark plug No. 3		
				AUC-8-0300-42A	1 WIRE, ignition, spark plug No. 4		
				AUC-8-0300-49A	1 WIRE, ignition, spark plug No. 5		
				AUC-8-0300-50A	1 WIRE, ignition, spark plug No. 6		
				AUC-16BB9623	1 WIRE, low tension, assembly)		
				AUC-8UUA0115	CABLE SET, distributor (supersedes CABLE SET, AUC-8UU0115)	1	
					(Composed of:		
				AUC-8A0179	8 NIPPLE, ignition wire		
				AUC-8UU014	1 WIRE, high tension, assembly		
				AUC-8UU0300-24A	1 WIRE, ignition, spark plug No. 1		
				AUC-8UU0300-29A	1 WIRE, ignition, spark plug No. 2		
				AUC-8UU0300-34A	1 WIRE, ignition, spark plug No. 3		
				AUC-8UU0300-42A	1 WIRE, ignition, spark plug No. 4		
				AUC-8UU0300-49A	1 WIRE, ignition, spark plug No. 5		
				AUC-8UU0300-50A	1 WIRE, ignition, spark plug No. 6		
				AUC-16BB9623	1 WIRE, low tension, assembly)		
		06-9		AUC-8T0314	CLIP, ignition wire (superseded by CLIP, AUC-8BL0314)	8	
	H004-0368050			AUC-8BL0314	CLIP, ignition wire (supersedes CLIP, AUC-8T0314)	8	
		06-9		AUC-8T2309A	GROMMET, felt, ignition (supersedes GROMMET, AUC-8T2309)	8	
				AUC-8T2309	GROMMET, rubber, ignition (superseded by GROMMET, AUC-8T2309A)	8	
		06-9		AUC-8A0179	NIPPLE, ignition wire (part of CABLE SET, AUC-8UUA0115)	8	
		06-9		AUC-8UU3308	PLATE, ignition wire support	1	
H-1	H001-1013019	06-9	216922	AUC-S-3120	SCREW, cap, hex-hd., S., $\frac{5}{16}$-18NC-2 x 1	1	
H-1	H001-1518008	06-9	103320	AUC-S-1346	WASHER, lock, reg., S., $\frac{5}{16}$ in.	1	
				AUC-8UBA2308	PLATE, ignition wire support	4	
		06-9		AUC-8UUA3308	PLATE, ignition wire support	1	
				AUC-8UU0547	PLATE, ignition wire support bracket	1	

				AUC-8UD014A	WIRE, high tension, ignition, assembly (part of CABLE SET, AUC-8UU0115) (superseded by WIRE, assembly, AUC-8UU014)	1
				AUC-8UU014	WIRE, high tension, ignition assembly (part of CABLE SET, AUC-8UUA0115) (supersedes WIRE, assembly, AUC-8UD014A)	1
				AUC-8-0300-24A	WIRE, ignition, spark plug No. 1 (part of CABLE SET, AUC-8UU0115) (superseded by WIRE, AUC-8UU0300-24A)	1
		06-9		AUC-8UU0300-24A	WIRE, ignition, spark plug No. 1 (part of CABLE SET, AUC-8UUA0115) (supersedes WIRE, AUC-8-0300-24A)	1
				AUC-8-0300-29A	WIRE, ignition, spark plug No. 2 (part of CABLE SET, AUC-8UU0115) (superseded by WIRE, AUC-8UU0300-29A)	1
		06-9		AUC-8UU0300-29A	WIRE, ignition, spark plug No. 2 (part of CABLE SET, AUC-8UUA0115) (supersedes WIRE, AUC-8-0300-29A)	1
				AUC-8-0300-34A	WIRE, ignition, spark plug No. 3 (part of CABLE SET, AUC-8UU0115) (superseded by WIRE, AUC-8UU0300-34A)	1
		06-9		AUC-8UU0300-34A	WIRE, ignition, spark plug No. 3 (part of CABLE SET, AUC-8UUA0115) (supersedes WIRE, AUC-8-0300-34A)	1
				AUC-8-0300-42A	WIRE, ignition, spark plug No. 4 (part of CABLE SET, AUC-8UU0115) (superseded by WIRE, AUC-8UU0300-42A)	1
		06-9		AUC-8UU0300-42A	WIRE, ignition, spark plug No. 4 (part of CABLE SET, AUC-8UUA0115) (supersedes WIRE, AUC-8-0300-42A)	1
				AUC-8-0300-49A	WIRE, ignition, spark plug No. 5 (part of CABLE SET, AUC-8UU0115) (superseded by WIRE, AUC-8UU0300-49A)	1
		06-9		AUC-8UU0300-49A	WIRE, ignition, spark plug No. 5 (part of CABLE SET, AUC-8UUA0115) (supersedes WIRE, AUC-8-0300-49A)	1
				AUC-8-0300-50A	WIRE, ignition, spark plug No. 6 (part of CABLE SET, AUC-8UU0115) (superseded by WIRE, AUC-8UU0300-50A)	1
		06-9		AUC-8UU0300-50A	WIRE, ignition, spark plug No. 6 (part of CABLE SET, AUC-8UUA0115) (supersedes WIRE, AUC-8-0300-50A)	1
		06-9		AUC-16BB9623	WIRE, low tension, ignition, assembly (part of CABLE SET, AUC-8UUA0115)	1
					0604B — SPARK PLUGS	
	0600-S-1471	06-9		AUC-S-1471	GASKET, spark plug, 14 mm.	6
H-4	H004-0501008	06-9		AUC-8E023	PLUG, spark (CP-J-10)	6
					0604C — IGNITION LOCK OR SWITCH	
	G085-3302080			AUC-16URK2420	SWITCH, ignition (DR-1997754) (superseded by SWITCH, AUC-16UKS2420)	1
	G162-1690371			AUC-16UKS2420	SWITCH, ignition, lever type (DR-1997797) (superseded by SWITCH, AUC-16UKS3420)	1
	G162-1690371	06-10		AUC-16UKS3420	SWITCH, ignition, lever type (DR-1997797) (supersedes SWITCH, AUC-16UKS2420)	1

Note Symbol	Official Stock Number	Figure Number	Part Number		ITEM	Quan. Reqd. per Unit Assy.	Unit Price
			Ordnance	Manufacturer			
Col. 1	Col. 2	Col. 3	Col. 4	Col. 5	Col. 6	Col. 7	Col. 8
					0605 — INSTRUMENTS (AMMETER, OIL GAGE, WATER TEMPERATURE GAGE, VOLTMETER AND ALL FUNCTIONAL PARTS)		
	G116-0400021	06-10		AUC-16UKS3630	AMMETER (SW-440047)	1	
	8240-440051	06-10		AUC-16UKSA3630	AMMETER, auxiliary (SW-440051)	1	
				AUC-10UV2303	BRACKET, heat indicator cable	1	
				AUC-S-2400	CLAMP, hose, 2¾ in. (heat cable to water manifold)	1	
				AUC-16S244	CLIP, heat indicator cable (superseded by CLIP, AUC-10UTE2989)	1	
				AUC-16Y244	CLIP, heat indicator cable	1	
				AUC-10UTE2989	CLIP, heat indicator cable bracket (supersedes CLIP, AUC-16S244)	1	
H-1	H001-0718001		220064	AUC-S-76	NUT, reg., hex., s-fin., S., ¼-20NC-2	1	
H-1	H001-1030136		113957	AUC-S-1614A	SCREW, machine, rd-hd., S., ¼-20NC-2 x ¾	1	
H-1	H001-1518007		103319	AUC-S-1345	WASHER, lock, reg., S., ¼ in.	2	
				AUC-16UC244	CLIP, heat indicator cable bracket	1	
H-1	H001-0718001		220064	AUC-S-76	NUT, reg., hex., s-fin., S., ¼-20NC-2	1	
H-1	H001-1030136		113957	AUC-S-1614A	SCREW, machine, rd-hd., S., ¼-20NC-2 x ¾	1	
H-1	H001-1518007		103319	AUC-S-1345	WASHER, lock, reg., S., ¼ in.	2	
	8240-444068	06-10		AUC-25UKS332	GAGE, air (SW-444068)	1	
	8240-441023	06-10		AUC-16UKS3775	GAGE, fuel (SW-441023)	1	
	G510-0193739	06-10		AUC-16UKS3564	GAGE, oil pressure (SW-444063)	1	
				AUC-16UKS31190	GAGE, viscometer	1	
	8240-442080-74	06-10		AUC-16UKS32040	INDICATOR, heat, including thermocouple and cable (SW-442080-74)	1	
					0605B — INSTRUMENT WIRING		
				AUC-16UKS3520A	CABLE, generator to regulator, assembly (closed cab only) (used on all cars from Serial No. U-7144-T-A2310 to U-7144-T-A5399 inclusive)	1	
				AUC-16UKS3520	CABLE, generator to regulator, assembly (closed cab only) (used on all cars up to and including Serial No. U-7144-T-A2309)	1	
	0600-16UKS3520B			AUC-16UKS3520B	CABLE, generator to regulator, assembly (open cab only) (used on all cars from Serial No. U-7144-T-A5400 and up)	1	
				AUC-16SA2724	GROMMET, rubber	2	
				AUC-16UKS3480	CABLE, head light to dimmer switch, assembly	1	
	0600-16UKS3740			AUC-16UKS3740	CABLE, junction block to instrument panel, assembly	1	
	G067-1500370			AUC-16WA244	CLIP, generator to regulator cable	3	
H-1	H001-0718001		220064	AUC-S-76	NUT, reg., hex., s-fin., S., ¼-20NC-2	2	
H-1	H001-1030136		113957	AUC-S-1614A	SCREW, machine, rd-hd., S., ¼-20NC-2 x ¾	2	
H-1	H001-1518007		103319	AUC-S-1345	WASHER, lock, reg., S., ¼ in.	4	
				AUC-16UKS244	CLIP, head light cable	5	

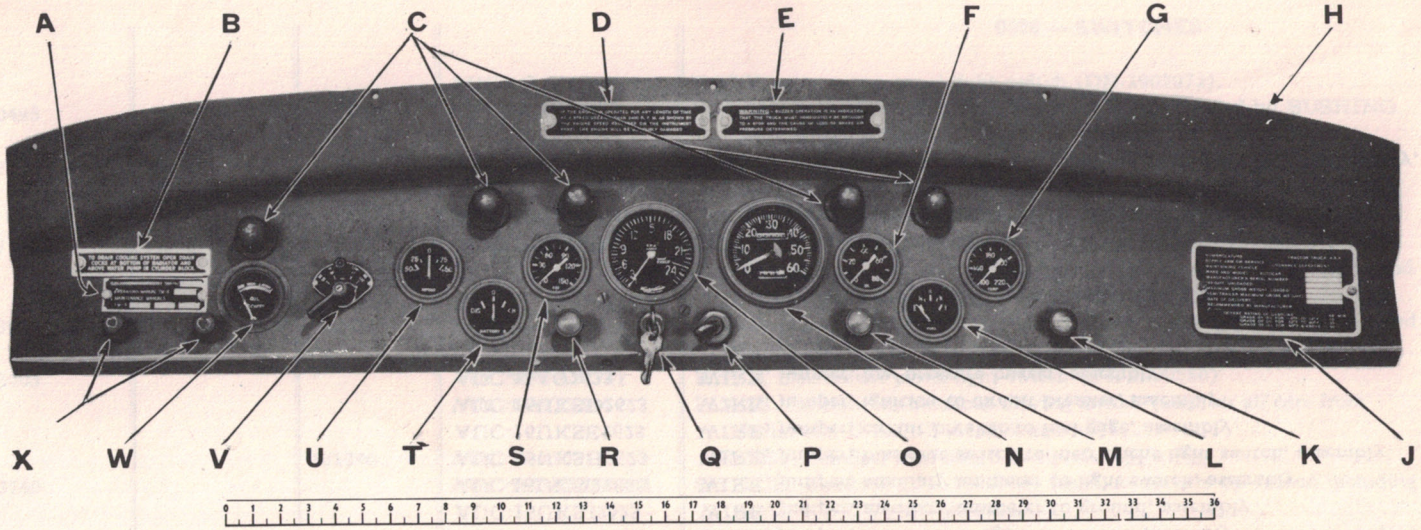

FIGURE 06-10 **INSTRUMENT PANEL AND INSTRUMENTS** **RA PD 346203**

KEY	ITEM	PART NO.	GROUP
A	PLATE, publications reference	AUC-16UU22842	2203
B	PLATE, drain caution	AUC-16UUC22285	2203
C	LIGHT, instrument panel	AUC-16UKS3951	0605C
D	PLATE, engine speed caution	AUC-16UUB22285	2203
E	PLATE, air pressure caution	AUC-16UUA22285	2203
F	GAGE, oil pressure	AUC-16UKS3564	0605
G	INDICATOR, heat	AUC-16UKS32040	0605
H	PANEL, instrument	AUC-15UKS472	1809
J	PLATE, nomenclature	AUC-16UU22285	2203
K	SWITCH, instrument panel light	AUC-16UKS32672	0606
L	GAGE, fuel	AUC-16UKS3775	0605
M	WIRE, throttle control	AUC-10UKS31270	0303A
N	SPEEDOMETER	AUC-16UKS3760	2204
O	TACHOMETER	AUC-16UKS31210	2205
P	SWITCH, ignition	AUC-16UKS3420	0604C
Q	LOCK, tachometer	AUC-16UKS31844	2205
R	WIRE, choke	AUC-10UKS3750	0301B
S	GAGE, air	AUC-25UKS332	0605
T	AMMETER, auxiliary	AUC-16UKSA3630	0605
U	AMMETER	AUC-16UKS3630	0605
V	SWITCH, blackout	AUC-16WG41241	0606
W	VISCOMETER	AUC-16UKS31190	0605
X	VALVE, windshield wiper	AUC-16UKSF01428	1811D

Note Symbol	Official Stock Number	Figure Number	Part Number		ITEM	Quan. Reqd. per Unit Assy.	Unit Price
			Ordnance	Manufacturer			
Col. 1	Col. 2	Col. 3	Col. 4	Col. 5	Col. 6	Col. 7	Col. 8
					0605B — INSTRUMENT WIRING — Continued		
H-4	H004-0327565			AUC-16WB244	CLIP, head light cable	3	
H-1	H001-1030136		113957	AUC-S-1614A	SCREW, machine, rd-hd., S., 1/4-20NC-2 x 3/4	3	
H-1	H001-1518007		103319	AUC-S-1345	WASHER, lock, reg., S., 1/4 in.	3	
H-4	H004-0327567			AUC-16W2487	CLIP, head light cable	1	
H-1	H001-0716540		110633	AUC-S-103	NUT, machine screw, hex., S., No. 10 (.190)-24NC-1	4	
H-1	H001-0718001		220064	AUC-S-76	NUT, reg., hex., s-fin., S., 1/4-20NC-2	1	
H-1	H001-1030102		110502	AUC-S-6139A	SCREW, machine, rd-hd., S., No. 10 (.190)-24NC-2 x 3/4	4	
H-1	H001-1030136		113957	AUC-S-1614A	SCREW, machine, rd-hd., S., 1/4-20NC-2 x 3/4	1	
				AUC-S-3524AC	SCREW, self-tapping, rd-hd., S., cd-pltd., No. 10 (.190)-32NF-2 x 5/8	3	
H-1	H001-1518007		103319	AUC-S-1345	WASHER, lock, reg., S., 1/4 in.	2	
H-1	H001-1518005		106497	AUC-W-7508	WASHER, lock, reg., S., No. 10 (.190)	8	
	G102-0400457			AUC-16WF244	CLIP, junction block to instrument panel cable	2	
H-1	H001-1030136		113957	AUC-S-1614A	SCREW, machine, rd-hd., S., 1/4-20NC-2 x 3/4	2	
H-1	H001-1518007		103319	AUC-S-1345	WASHER, lock, reg., S., 1/4 in.	2	
				AUC-16RL21785	CONNECTOR, single, horn	1	
				AUC-16W21785	CONNECTOR, three-way, blackout lamp circuit	1	
				AUC-16UD2724	GROMMET, head light cable	1	
				AUC-16UKSF2623	WIRE, jumper, ammeter to ignition switch, assembly	1	
				AUC-16UKSJ2623	WIRE, jumper, auxiliary ammeter to ground, assembly	1	
				AUC-16UKSG2623	WIRE, jumper, auxiliary ammeter to light switch, assembly	1	
				AUC-16UKSH2623	WIRE, jumper, blackout switch to instrument light switch, assembly	1	
				AUC-16UKSE2623	WIRE, jumper, circuit breaker to fuel gage, assembly	1	
				AUC-16UKSD2623	WIRE, jumper, ignition to circuit breaker, assembly	1	
				AUC-16AQ2623	WIRE, jumper, low pressure buzzer, assembly	1	
					0605C — PANEL LIGHT		
				AUC-16UKS31408	HOOD, instrument panel light	5	
				AUC-16UKSA2951	SOCKET, dash light, assembly (5 lights) (superseded by SOCKET, assembly, AUC-16UKS3951)	1	
		06-10		AUC-16UKS3951	SOCKET, dash light, assembly (5 lights) (supersedes SOCKET, assembly, AUC-16UKSA2951)	1	

				AUC-16UKSA02672	BODY, instrument panel light switch (DR-1902072)	1
	G102-0400495			AUC-16WB32732	BUSHING, blackout switch (DR-1990557) (superseded by BUSHING, AUC-16WC32732)	1
	G103-1527750			AUC-16WC32732	BUSHING, blackout switch (DR-1990558) (used on all cars up to and including Serial No. U-7144-T-A10299) (supersedes BUSHING, AUC-16WB32732)	1
	G103-1527736			AUC-16WA22732	BUSHING, instrument panel light switch (DR-1884374)	1
				AUC-16UKS02972	KNOB, blackout driving light switch control (used on all cars up to and including Serial No. U-7144-T-A10299)	1
	G103-1663902			AUC-16W22731	KNOB, blackout switch, w/set SCREW, assembly (DR-1990544) (used on all cars up to and including Serial No. U-7144-T-A10299)	1
	G103-1663903			AUC-16WA22731	KNOB, instrument panel light switch (DR-1990550)	1
				AUC-16W33384	PLATE, escutcheon, blackout driving switch (used on all cars from Serial No. U-7144-T-A10300 and up)	1
			131240	AUC-W-1201C	RIVET, tubular, oval-hd., S., cd-pltd., 3/32 x 5/32	2
	G125-1393740			AUC-16UKSB01241	SWITCH, blackout (DR-1900069) (used on all cars up to and including Serial No. U-7144-T-A10299)	1
				AUC-16UKSA02973	SWITCH, blackout driving light (used on all cars up to and including Serial No. U-7144-T-A10299)	1
				AUC-16UKS02763	NUT, mounting, blackout driving light switch	1
H-4	H004-0506602			AUC-16UKS02973	SWITCH, blackout driving light, assembly (HC-7421) (superseded by SWITCH, assembly, AUC-16UKS22973)	1
H-4	H004-0506602	06-10		AUC-16UKS22973	SWITCH, blackout driving light, assembly (HC-7421) (supersedes SWITCH, assembly, AUC-16UKS02973) (used on all cars up to and including Serial No. U-7144-T-A10299)	1
H-4	H004-0506605			AUC-16UKSA41241	SWITCH, blackout lighting, assembly (DR-1994513) (used on all cars up to and including Serial No. U-7144-T-A10299)	1
	G103-1714403			AUC-16W22763	NUT, mounting, blackout switch (DR-1886809)	1
H-1	H001-1519013		115551	AUC-S-3295	WASHER, lock, int. teeth, reg., S., 1/2 in.	1
	G671-5636599	06-10		AUC-16WG41241	SWITCH, blackout lighting, assembly (DR-194522) (used on all cars from Serial No. U-7144-T-A10300 and up)	1
	G085-3303600			AUC-16W3699	SWITCH, foot dimmer, assembly (DR-1997007) (superseded by SWITCH, assembly, AUC-16UKS3699)	1
	2580-1997013			AUC-16UKS3699	SWITCH, foot dimmer, assembly (DR-1997013) (supersedes SWITCH, assembly, AUC-16W3699)	1
H-1	H001-1023134		113989	AUC-S-3816A	SCREW, machine, fl-hd., S., 1/4-20NC-2 x 5/8	2
H-1	H001-1521005		114616	AUC-S-3189	WASHER, lock, ext. teeth, ck., S., 1/4 in.	2
	2580-1997772	06-10		AUC-16UKS32672	SWITCH, instrument panel light, assembly (DR-1997772)	1
				AUC-16UKSW2623	WIRE, jumper, blackout switch to driving light switch, assembly (used on all cars up to and including Serial No. U-7144-T-A10299)	1

Note Symbol	Official Stock Number	Figure Number	Part Number		ITEM	Quan. Reqd. per Unit Assy.	Unit Price
			Ordnance	Manufacturer			
Col. 1	Col. 2	Col. 3	Col. 4	Col. 5	Col. 6	Col. 7	Col. 8
					0606B — CHASSIS WIRING		
				AUC-16UKS21834	BRACKET, tail light cable	1	
				AUC-16UKSC4510	CABLE, tail light, assembly (superseded by CABLE, assembly, AUC-16UKSA3510)	1	
				AUC-16UKSA5310	CABLE, tail light, assembly (supersedes CABLE, assembly, AUC-16UKSC4510)	1	
	G067-1500370			AUC-16WA244	CLIP, tail light cable	5	
H-1	H001-0718001		220064	AUC-S-76	NUT, reg., hex., s-fin., S., 1/4-20NC-2	5	
H-1	H001-1030138		113959	AUC-S-1607A	SCREW, machine, rd-hd., S., 1/4-20NC-2 x 1	5	
H-1	H001-1518007		103319	AUC-S-1345	WASHER, lock, reg., S., 1/4 in.	10	
H-4	H004-0327565			AUC-16WB244	CLIP, tail light cable	5	
H-1	H001-0718001		220064	AUC-S-76	NUT, reg., hex., s-fin., S., 1/4-20NC-2	5	
H-1	H001-1030138		113959	AUC-S-1607A	SCREW, machine, rd-hd., S., 1/4-20NC-2 x 1	5	
H-1	H001-1518007		103319	AUC-S-1345	WASHER, lock, reg., S., 1/4 in.	10	
H-4	H004-0328250			AUC-16W21785	CONNECTOR, three way, tail lamp circuit	1	
				AUC-16UD2724	GROMMET, tail light cable	4	
				AUC-16UKSP2623	WIRE, jumper, trailer receptacle to ground, assembly	1	
					0606D — CIRCUIT BREAKERS		
				AUC-16URK22649A	BREAKER, circuit, horn and low pressure buzzer (SPT-CDA-30) (used on all cars from Serial No. U-7144-T-A14100 and up)	2	
H-1	H001-0716535		103092	AUC-S-3740	NUT, machine screw, hex., S., No. 8 (.164)-32NC-1	4	
H-1	H001-1030084		100753	AUC-S-6126A	SCREW, machine, rd-hd., S., No. 8 (.164)-32NC-2 x 3/4	4	
H-1	H001-1518004		106496	AUC-S-3164	WASHER, lock, hv., S., No. 8 (.164)	8	
	0600-16URK22649			AUC-16URK22649	BREAKER, circuit, horn and low pressure buzzer (SPT-B6069A) (used on all cars up to and including Serial No. U-7144-T-A14099)	2	
H-1	H001-0716535		103092	AUC-S-3740	NUT, machine screw, hex., S., No. 8 (.164)-32NC-1	4	
H-1	H001-1030084		100753	AUC-S-6126A	SCREW, machine, rd-hd., S., No. 8 (.164)-32NC-2 x 3/4	4	
H-1	H001-1518004		106496	AUC-S-3164	WASHER, lock, hv., S., No. 8 (.164)	8	
				AUC-16UKSA22649	BREAKER, circuit, starting switch (SPT-PDLA-50) (used on all cars from Serial No. U-7144-T-A14100 and up)	2	
H-1	H001-0716610		103088	AUC-S-3745	NUT, machine screw, hex., S., No. 10 (.190)-32NF-1	4	
H-1	H001-1030590		100767	AUC-W-2972	SCREW, machine, rd-hd., S., No. 10 (.190)-32NF-2 x 7/8	4	
H-1	H001-1518005		106497	AUC-W-7508	WASHER, lock, reg., S., No. 10 (.190)	8	
	G510-7033355			AUC-16UKS22649	BREAKER, circuit, starting switch (SPT-B5500) (used on all cars up to and including Serial No. U-7144-T-A14099)	1	

H-1	H001-0716610		103088	AUC-S-3745	NUT, machine screw, hex., S., No. 10 (.190)-32NF-1	2
H-1	H001-1023627		100869	AUC-S-3811A	SCREW, machine, fl-hd., S., No. 10 (.190)-32NF-2 x 5/8	2
H-1	H001-1518005		106497	AUC-W-7508	WASHER, lock, reg., S., No. 10 (.190)	4
				AUC-16UKS23609	COVER, starting switch circuit breaker (used on all cars up to and including Serial No. U-7144-T-A14099)	2
				AUC-16UKSA22976	PLATE, mounting, starting switch circuit breaker (used on all cars from Serial No. U-7144-T-A14100 and up)	1
					0606E — TERMINAL BOXES	
	2980-SP-2188			AUC-16UKS32676	BLOCK, junction, 7 pole	2
H-1	H001-0718001		220064	AUC-S-76	NUT, reg., hex., s-fin., S., 1/4-20NC-2	4
H-1	H001-1030136		113957	AUC-S-1614A	SCREW, machine, rd-hd., S., 1/4-20NC-2 x 3/4	4
H-1	H001-1518007		103319	AUC-S-1345	WASHER, lock, reg., S., 1/4 in.	8
				AUC-16UKS31442	BRACKET, junction block	1
				AUC-16UKS32744	COVER, junction block	1
H-1	H001-0716540		110633	AUC-S-103	NUT, machine screw, hex., S., No. 10 (.190)-24NC-1	4
H-1	H001-1030100		110500	AUC-S-6148A	SCREW, machine, rd-hd., S., No. 10 (.190)-24NC-2 x 1/2	4
H-1	H001-1518005		106497	AUC-W-7508	WASHER, lock, reg., S., No. 10 (.190)	8
					0606F — TRAILER ELECTRIC COUPLING PARTS	
	G117-0103901			AUC-16URK31570	CABLE, trailer lighting, assembly	1
				AUC-16HF31098	RECEPTACLE, trailer lighting cable (closed cab only)	1
H-1	H001-0718003		220066	AUC-S-78	NUT, reg., hex., s-fin., S., 3/8-16NC-2	2
H-1	H001-1013032		213729	AUC-S-23	SCREW, cap, hex-hd., S., 3/8-16NC-2 x 1	2
H-1	H001-1518009		103321	AUC-S-1347	WASHER, lock, reg., S., 3/8 in.	4
				AUC-16UKS41098	RECEPTACLE, trailer lighting cable (open cab only) (supersedes RECEPTACLE, AUC-16UKS31098)	1
H-1	H001-0718003		220066	AUC-S-78	NUT, reg., hex., s-fin., S., 3/8-16NC-2	2
H-1	H001-1013032		213729	AUC-S-23	SCREW, cap, hex-hd., S., 3/8-16NC-2 x 1	2
H-1	H001-1518009		103321	AUC-S-1347	WASHER, lock, reg., S., 3/8 in.	4
				AUC-16W41098	RECEPTACLE, trailer lighting cable (superseded by RECEPTACLE, AUC-16UKS31098)	1
	0600-16UKS31098			AUC-16UKS31098	RECEPTACLE, trailer lighting cable (superseded by RECEPTACLE, AUC-16UKS41098)	1
				AUC-16UKSB31098	SOCKET, dummy trailer, assembly (open cab only) (used on all cars from Serial No. U-7144-T-A10281 and up)	1
H-1	H001-0718003		220066	AUC-S-78	NUT, reg., hex., s-fin., S., 3/8-16NC-2	2
H-1	H001-1013032		213729	AUC-S-23	SCREW, cap, hex-hd., S., 3/8-16NC-2 x 1	2
H-1	H001-1518009		103321	AUC-S-1347	WASHER, lock, reg., S., 3/8 in.	4

Note Symbol	Official Stock Number	Figure Number	Part Number		ITEM	Quan. Reqd. per Unit Assy.	Unit Price
			Ordnance	Manufacturer			
Col. 1	Col. 2	Col. 3	Col. 4	Col. 5	Col. 6	Col. 7	Col. 8
					0607 — HEAD LIGHTS		
	3500-5933524	06-11		AUC-16UKSA0988	BODY, head light, assembly—prime (GL-5933524)	2	
		06-11		AUC-16TE4251	BRACKET, head light, L.H.	1	
		06-11		AUC-16TE4249	BRACKET, head light, R.H.	1	
H-1	H001-0718003		220066	AUC-S-78	NUT, reg., hex., s-fin., S., 3/8-16NC-2	6	
H-1	H001-1013034		213737	AUC-S-17	SCREW, cap, hex-hd., S., 3/8-16NC-2 x 1½	6	
H-1	H001-1518009		103321	AUC-S-1347	WASHER, lock, reg., S., 3/8 in.	12	
	G116-1537990			AUC-16URK0274	CLIP, loom, head light (GL-5930502)	2	
	3500-5933522	06-11		AUC-16UKSA0992	CONNECTOR, head light, w/WIRING, assembly (GL-5933522)	2	
				AUC-16URK0265	EYELET, terminal, head light (GL-1867662)	2	
	G057-0203923			AUC-16URK0724	GROMMET, head light (GL-5930487) (superseded by GROMMET, AUC-16URK2724)	2	
	G057-0203923	06-11		AUC-16URK2724	GROMMET, head light (GL-5930487) (supersedes GROMMET, AUC-16URK0724)	2	
	3500-925307			AUC-16UKS4460	LIGHT, head, assembly, 6 v. (GL-1011-J)	2	
					(Composed of:		
				AUC-16UKSA0988	1 BODY		
				AUC-16URK0274	1 CLIP		
				AUC-16UKSA0992	1 CONNECTOR, w/WIRING, assembly		
				AUC-16URK0265	1 EYELET		
				AUC-16URK2724	1 GROMMET		
				AUC-16URK02648	1 LAMP-UNIT		
				AUC-A-1075	1 LOOM		
				AUC-16URK0365	1 MOLDING, assembly		
				AUC-16URK0286	1 RING		
				AUC-16SC02633	1 SCREW		
				AUC-16URK0759	3 SCREW		
				AUC-16URK0915	2 TERMINAL)		
				AUC-A-1075	LOOM, head light wire cover (GL-5932572)	2	
	3500-5931167	06-11		AUC-16URK0365	MOLDING, head light, assembly—prime (GL-5931167)	2	
	G116-0401400	06-11		AUC-16URK0286	RING, retaining, head light (GL-5932207)	2	
	G085-1482056			AUC-16SC02633	SCREW, head light molding (GL-922690)	2	
	G085-3302920			AUC-16URK0759	SCREW, head light retaining ring (GL-924552)	6	
				AUC-16URK0915	TERMINAL, head light (GL-1878192)	4	
	3500-912663			AUC-16RLE0264	WASHER, head light mounting nut (special) (GL-912663)	1	

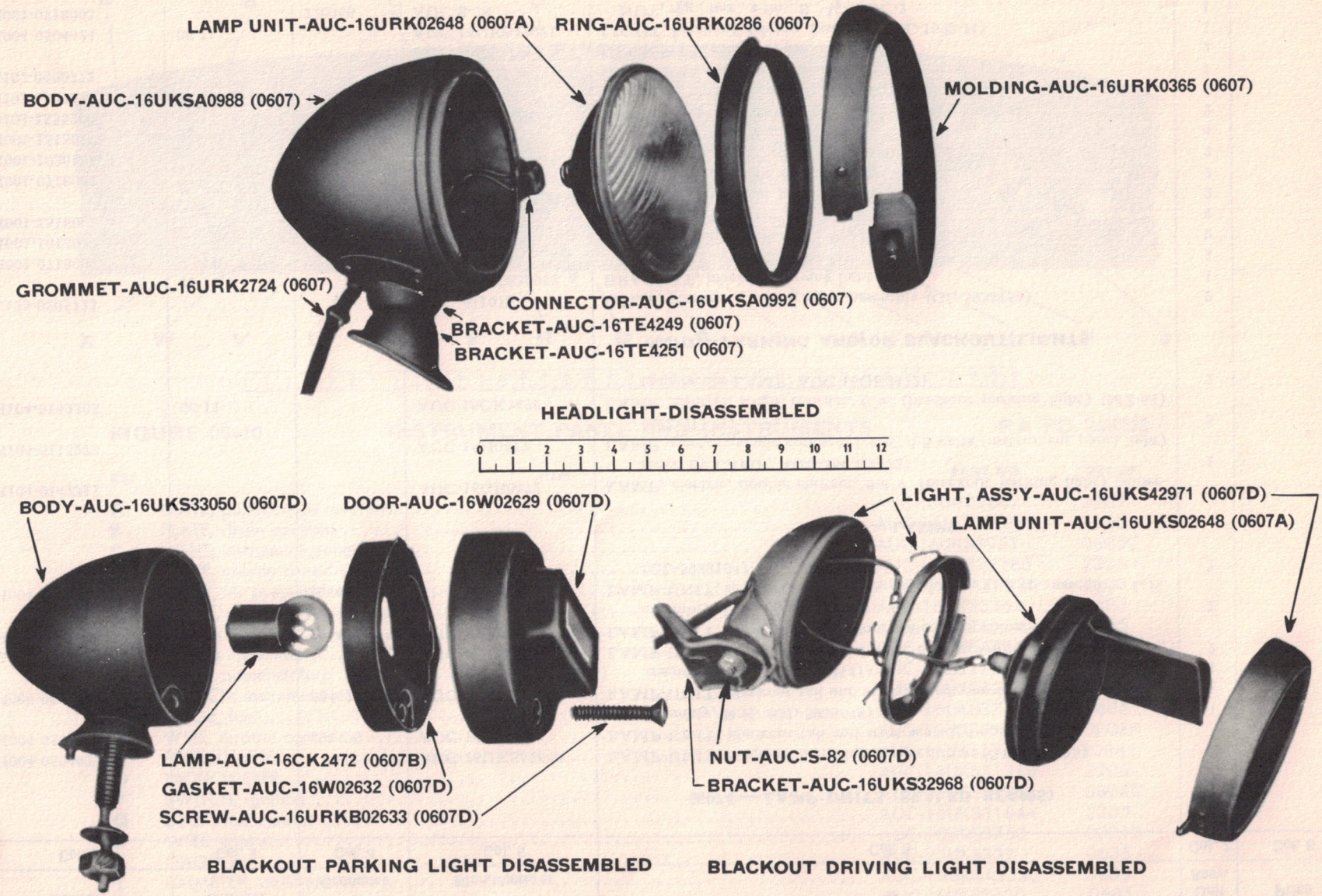

FIGURE 06-11 HEAD LIGHTS, BLACKOUT DRIVING AND PARKING LIGHTS RA PD 346204

GROUP 06 — ELECTRICAL SYSTEM (Cont'd)

Note Symbol	Official Stock Number	Figure Number	Part Number		ITEM	Quan. Reqd. per Unit Assy.	Unit Price
			Ordnance	Manufacturer			
Col. 1	Col. 2	Col. 3	Col. 4	Col. 5	Col. 6	Col. 7	Col. 8
					0607A — LAMP UNITS (SEALED BEAMS)		
H-4	H004-0504433	06-11		AUC-16UKS02648	LAMP-UNIT, blackout drive light, sealed, 6 v. (GL-5934473)	1	
H-4	H004-0504420		504420	AUC-16L0729	LAMP-UNIT, blackout tail and stop, sealed, 4-opening, 6 v., 3 cp., assembly, R.H. (GL-5933078)	1	
H-4	H004-0504423		504423	AUC-16M0729	LAMP-UNIT, blackout tail and stop, sealed, one-opening, 6 v., 3 cp., assembly, R.H. (GL-5933121)	1	
	G085-0101970	06-11		AUC-16URK02648	LAMP-UNIT, sealed beam, head light, 6 v., assembly (GL-925000)	2	
H-4	H004-0504420		504420	AUC-16L0729	LAMP-UNIT, service tail and stop, sealed, 4-opening, 6 v., 3 cp., assembly, L.H. (GL-5933078)	1	
H-4	H004-0504417		504417	AUC-16K0729	LAMP-UNIT, service tail and stop, sealed, 6 v., 21-3 cp., assembly, L.H. (GL-5933104)	1	
					0607B — LAMPS		
H-4	H104-0142311			AUC-16GE0472	LAMP, electric, double contact, 6-8 v. (blackout parking light) (superseded by LAMP, AUC-16CK2472)	2	
H-4	H104-0115273			AUC-16H0472	LAMP, electric, single contact, 1 c.p., 6-8 volts (instrument panel light) (MZ-51)	5	
H-4	H104-0142303	06-11		AUC-16CK2472	LAMP, electric, single contact, 6 v. (blackout parking light) (MZ-63) (supersedes LAMP, AUC-16GE0472)	2	
					0607D — PARKING AND/OR BLACKOUT LIGHTS		
	G125-0205725			AUC-A-1076	BODY, blackout parking light, assembly (GL-5933156)	2	
		06-11		AUC-16UKS32968	BRACKET, blackout driving light	1	
H-1	H001-0718002	06-11	220065	AUC-S-82	NUT, reg., hex., s-fin., S., $\frac{5}{16}$-18NC-2	2	
H-1	H001-1013019		216922	AUC-S-3120	SCREW, cap, hex-hd., S., $\frac{5}{16}$-18NC-2 x 1	2	
H-1	H001-1518008		103320	AUC-S-1346	WASHER, lock, reg., S., $\frac{5}{16}$ in.	4	
				AUC-16UKS22708	BRACKET, blackout parking light	2	
H-1	H001-0718001		220064	AUC-S-76	NUT, reg., hex., s-fin., S., $\frac{1}{4}$-20NC-2	2	
H-1	H001-1030138		113959	AUC-S-1607A	SCREW, machine, rd-hd., S., $\frac{1}{4}$-20NC-2 x 1	2	
H-1	H001-1518007		103319	AUC-S-1345	WASHER, lock, reg., S., $\frac{1}{4}$ in.	4	
	G103-1555200	06-11		AUC-16W02629	DOOR, blackout parking light, assembly (GL-5933122)	2	
	G103-1593625	06-11		AUC-16W02632	GASKET, blackout parking light door (GL-5933075)	2	
	G102-0400772			AUC-16W2724	GROMMET, blackout driving light	1	
				AUC-16SA2724	GROMMET, blackout parking light	2	
H-4	H004-0504424	06-11		AUC-16UKS42971	LIGHT, blackout driving, assembly (GL-1023-H)	1	
H-1	H001-0718003		220066	AUC-S-78	NUT, reg., hex., s-fin., S., $\frac{3}{8}$-16NC-2	1	

H-1	H001-1518009		103321	AUC-S-1347	WASHER, lock, reg., S., 3/8 in.	1
H-1	H001-1530009		103341	AUC-S-387	WASHER, plain, S., SAE std., 3/8 in. (13/32 in. I.D. x 13/16 in. O.D. x 1/16 in. thick)	1
H-4	H004-0504439	06-11		AUC-16UKS33050	LIGHT, blackout parking, 6 v., assembly (GL-5513A)	2
					(Includes:	
				AUC-A-1076	1 BODY, assembly	
				AUC-16W02629	1 DOOR, assembly	
				AUC-16W02632	1 GASKET	
				AUC-16GE0472	1 LAMP	
				AUC-16URKB02633	1 SCREW	
				AUC-16URK0915	1 TERMINAL)	
				AUC-16UKS33101	REINFORCEMENT, blackout driving light, assembly	1
H-1	H001-1026074	06-11	100714	AUC-16URKB02633	SCREW, blackout parking light door (GL-5932419)	2
H-4	H004-0366630			AUC-16URK0915	TERMINAL, blackout parking light wire (GL-1878192)	2

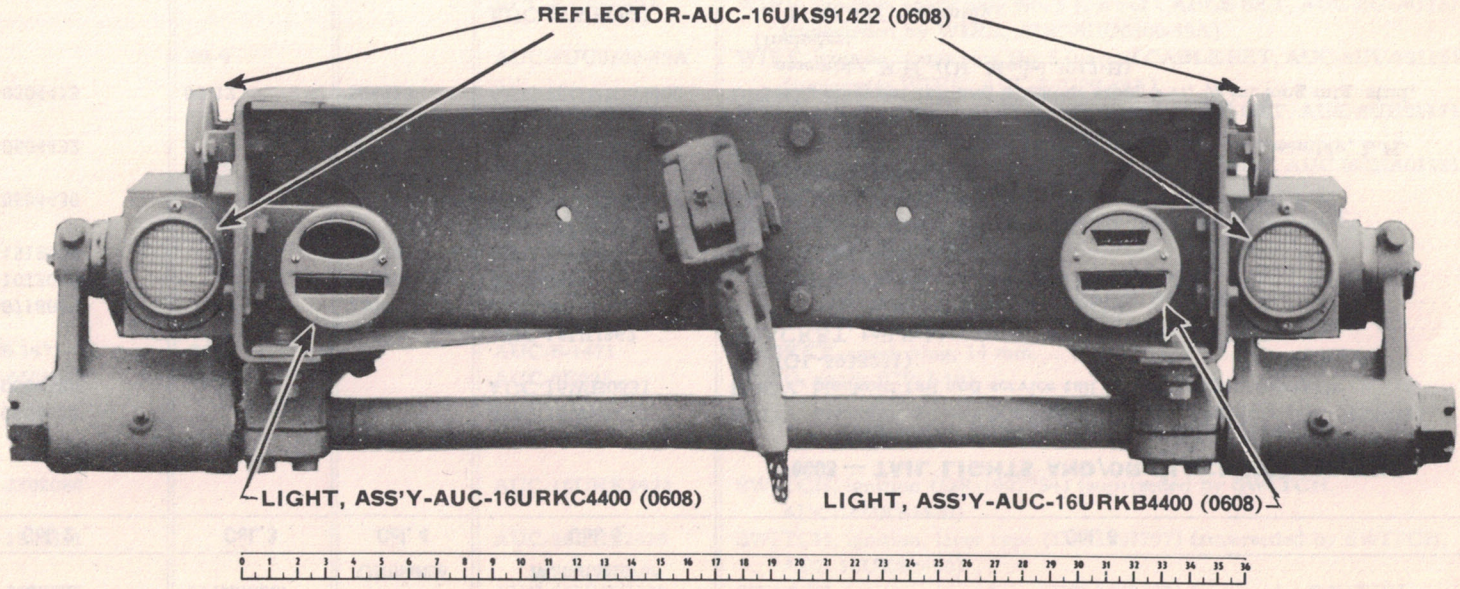

FIGURE 06-12 TAIL LIGHTS AND BLACKOUT LIGHTS RA PD 346205

Note Symbol	Official Stock Number	Figure Number	Part Number		ITEM	Quan. Reqd. per Unit Assy.	Unit Price
			Ordnance	Manufacturer			
Col. 1	Col. 2	Col. 3	Col. 4	Col. 5	Col. 6	Col. 7	Col. 8
					0608 — TAIL LIGHTS AND/OR BLACKOUT LIGHTS		
H-4	H004-0504428			AUC-16WB0631	BODY, blackout tail and blackout stop light, assembly (GL-5933231)	1	
H-4	H004-0504428			AUC-16WB0631	BODY, blackout tail and service tail and stop light, assembly (GL-5933231)	1	
				AUC-16UU362	BRACKET, tail light	2	
H-1	H001-0718003		220066	AUC-S-78	NUT, reg., hex., s-fin., S., 3/8-16NC-2	4	
H-1	H001-1013033		213733	AUC-S-64	SCREW, cap, hex-hd., S., 3/8-16NC-2 x 1 1/4	4	
H-1	H001-1518009		103321	AUC-S-1347	WASHER, lock, reg., S., 3/8 in.	8	
				AUC-16UKS22131	BRACKET, tail light reflector	2	
H-4	H004-0504430			AUC-16WB0632	DOOR, blackout tail and blackout stop light, assembly, R.H. (GL-5933055)	1	
H-4	H004-0504432			AUC-16WC0632	DOOR, blackout tail and service tail and stop light, assembly, L.H. (GL-5933056)	1	
H-4	H004-0504413	06-12	504413	AUC-16URKB4400	LIGHT, blackout tail and blackout stop, 6 v., 7/8 in. long mtg. stud, assembly, R.H. (GL-Model 3012-B)	1	
					(Includes:		
				AUC-16WB0631	1 BODY, assembly		
				AUC-16WB0632	1 DOOR, assembly		
				AUC-16L0729	1 LAMP-UNIT		
				AUC-16M0729	1 LAMP-UNIT		
				AUC-16WB0633	2 SCREW, door)		
H-4	H004-0504406	06-12	504406	AUC-16URKC4400	LIGHT, blackout tail and service tail and stop, 6 v., 7/8 in. long mtg. stud, assembly, L.H. (GL-Model 3012-A)	1	
					(Includes:		
				AUC-16WB0631	1 BODY, assembly		
				AUC-16WC0632	1 DOOR, assembly		
				AUC-16L0729	1 LAMP-UNIT		
				AUC-16K0729	1 LAMP-UNIT		
				AUC-16WB0633	2 SCREW, door)		
H-4	H004-0348085			AUC-16W2725	PLUG, double contact, tail lamp (HC-1450)	1	
H-4	H004-0348120			AUC-16W2757	PLUG, single contact, tail lamp (HC-1451)	3	
		06-12		AUC-16UKSA91422	REFLECTOR, tail light, amber	2	
H-1	H001-0718001		220064	AUC-S-76	NUT, reg., hex., s-fin., S., 1/4-20NC-2	4	
H-1	H001-1030136		113957	AUC-S-1614A	SCREW, machine, rd-hd., S., 1/4-20NC-2 x 3/4	4	
H-1	H001-1518007		103319	AUC-S-1345	WASHER, lock, reg., S., 1/4 in.	8	

		06-12		AUC-16UKS91422	REFLECTOR, tail light, red	4
H-1	H001-0718001		220064	AUC-S-76	NUT, reg., hex., s-fin., S., 1/4-20NC-2	8
H-1	H001-1030136		113957	AUC-S-1614A	SCREW, machine, rd-hd., S., 1/4-20NC-2 x 3/4	8
H-1	H001-1518007		103319	AUC-S-1345	WASHER, lock, reg., S., 1/4 in.	16
H-1	H001-1030088			AUC-16WB0633	SCREW, blackout tail and blackout stop light door (GL-5933069)	2
H-1	H001-1030088			AUC-16WB0633	SCREW, blackout tail and service tail and stop light door (GL-5933069)	2
					0609 — HORNS	
				AUC-16UKS31376	BRACKET, horn and relay (closed cab only)	1
				AUC-16UKSF31376	BRACKET, horn and relay (open cab only)	1
H-1	H001-0718003		220066	AUC-S-78	NUT, reg., hex., s-fin., S., 3/8-16NC-2	2
H-1	H001-1013032		213729	AUC-S-23	SCREW, cap, hex-hd., S., 3/8-16NC-2 x 1	2
H-1	H001-1518009		103321	AUC-S-1347	WASHER, lock, reg., S., 3/8 in.	4
	G102-0400205			AUC-16W41620	BRACKET, horn mounting (DR-1872391)	2
	G509-0217780			AUC-16UKS32740	HORN, dual electric, assembly (DR-1880391)	1
				AUC-16UKS0640	HORN, electric (DR-199519)	1
H-1	H001-0718001		220064	AUC-S-76	NUT, reg., hex., s-fin., S., 1/4-20NC-2	2
H-1	H001-1030136		113957	AUC-S-1614A	SCREW, machine, rd-hd., S., 1/4-20NC-2 x 3/4	2
H-1	H001-1518007		103319	AUC-S-1345	WASHER, lock, reg., S., 1/4 in.	4
				AUC-16UKSA0640	HORN, electric (DR-199520)	1
H-1	H001-0718001		220064	AUC-S-76	NUT, reg., hex., s-fin., S., 1/4-20NC-2	2
H-1	H001-1030136		113957	AUC-S-1614A	SCREW, machine, rd-hd., S., 1/4-20NC-2 x 3/4	2
H-1	H001-1518007		103319	AUC-S-1345	WASHER, lock, reg., S., 1/4 in.	4
	G067-0904530			AUC-16WA22069	RELAY, electric horn (DR-1116818) (superseded by RELAY, AUC-16UKS02069)	1
				AUC-16UKS02069	RELAY, electric horn (DR-1116775) (supersedes RELAY, AUC-16WA22069)	1
H-1	H001-0718001		220064	AUC-S-76	NUT, reg., hex., s-fin., S., 1/4-20NC-2	2
H-1	H001-1030136		113957	AUC-S-1614A	SCREW, machine, rd-hd., S., 1/4-20NC-2 x 3/4	2
H-1	H001-1518007		103319	AUC-S-1345	WASHER, lock, reg., S., 1/4 in.	4
				AUC-16UKSF31536	SUPPORT, horn and relay bracket	1
				AUC-16UKSL2623	WIRE, jumper, circuit breaker to horn, assembly	1
				AUC-16UKSK2623	WIRE, jumper, horn relay to horn, assembly	1
					0609A — HORN AND/OR SIREN BUTTON AND WIRING	
	G067-2100090			AUC-10UK0163	BUTTON, steering gear horn (RG-450029) (part of KIT, repair, AUC-10UU01322)	1
	G116-1531226			AUC-10DA0424	CABLE, steering gear horn, w/upper TERMINAL, assembly (RG-8034-96) (part of KIT, repair, AUC-10UU01322)	1
	G067-2100120			AUC-10RM0726	CAP, steering gear horn button contact (RG-029031) (part of KIT, repair, AUC-10UU01322)	1
	G067-2100200			AUC-10UK0722	CUP, steering gear horn button contact (RG-029037) (part of KIT, repair, AUC-10UU01322)	1
	7640-450061			AUC-10SJ01259	EMBLEM, steering gear horn button (RG-450061)	1

Note Symbol	Official Stock Number	Figure Number	Part Number		ITEM	Quan. Reqd. per Unit Assy.	Unit Price
			Ordnance	Manufacturer			
Col. 1	Col. 2	Col. 3	Col. 4	Col. 5	Col. 6	Col. 7	Col. 8
					0609A — HORN AND/OR SIREN BUTTON AND WIRING — Continued		
	G102-0400566			AUC-10DA0648	FERRULE, insulating, steering gear horn button (RG-051036) (part of KIT, repair, AUC-10UU01322)	1	
	7640-504036			AUC-10UU01322	KIT, repair, horn button (RG-504036)	1	
					(Composed of:		
				AUC-10W0163	1 BUTTON		
				AUC-10DA0424	1 CABLE, w/upper TERMINAL, assembly		
				AUC-10RM0726	1 CAP		
				AUC-10UK0722	1 CUP		
				AUC-10DA0648	1 FERRULE		
				AUC-S-1127	3 SCREW		
				AUC-10UK01252	1 SEGMENT		
				AUC-10BL0725	1 SPRING		
				AUC-10RM0166	1 SPRING		
				AUC-10RM0724	1 WASHER)		
				AUC-S-1127	SCREW, wood, rd-hd., S., black enameled, 3/4 in., No. 10 (.190) (steering gear horn button) (part of KIT, repair, AUC-10UU01322) (superseded by SCREW, AUC-S-1127AF)	3	
				AUC-S-1127AF	SCREW, wood, rd-hd., S., black enameled, 3/4 in., No. 10 (.190) (steering gear horn button) (RG-022020) (supersedes SCREW, AUC-S-1127)	3	
	G067-2100330			AUC-10UK01252	SEGMENT, base and retaining, steering gear horn button (RG-454895) (part of KIT, repair, AUC-10UU01322)	1	
	G102-0403147			AUC-10URLB01145	SHIM, steering gear horn button emblem (RG-033078)	1	
	G067-2100510			AUC-10RM0166	SPRING, steering gear horn button (RG-401081) (part of KIT, repair, AUC-10UU01322)	1	
	G067-2100520			AUC-10BL0725	SPRING, steering gear horn button contact (RG-401082) (part of KIT, repair, AUC-10UU01322)	1	
	G116-1843043			AUC-10RM0724	WASHER, steering gear horn button contact (RG-029036) (part of KIT, repair, AUC-10UU01322)	1	
					0610 — BATTERY		
H-15	H015-0500905		500905	AUC-16DUU0440	BATTERY, storage, 6-8 v., type 4H, dry charged (ES-XHM-194) (Electrolyte in separate container; see ELECTROLYTE, 51-A-1562-150)	2	
H-15	H015-0500904		500904	AUC-16UU0440	BATTERY, storage, 6-8 v., type 4H, wet charged (ES-XH-194)	2	
	51-A-1562-150			AUC-16A03036	ELECTROLYTE, storage battery, specific gravity 1.275 (for BATTERY, dry charged, H015-0500905)	AR	

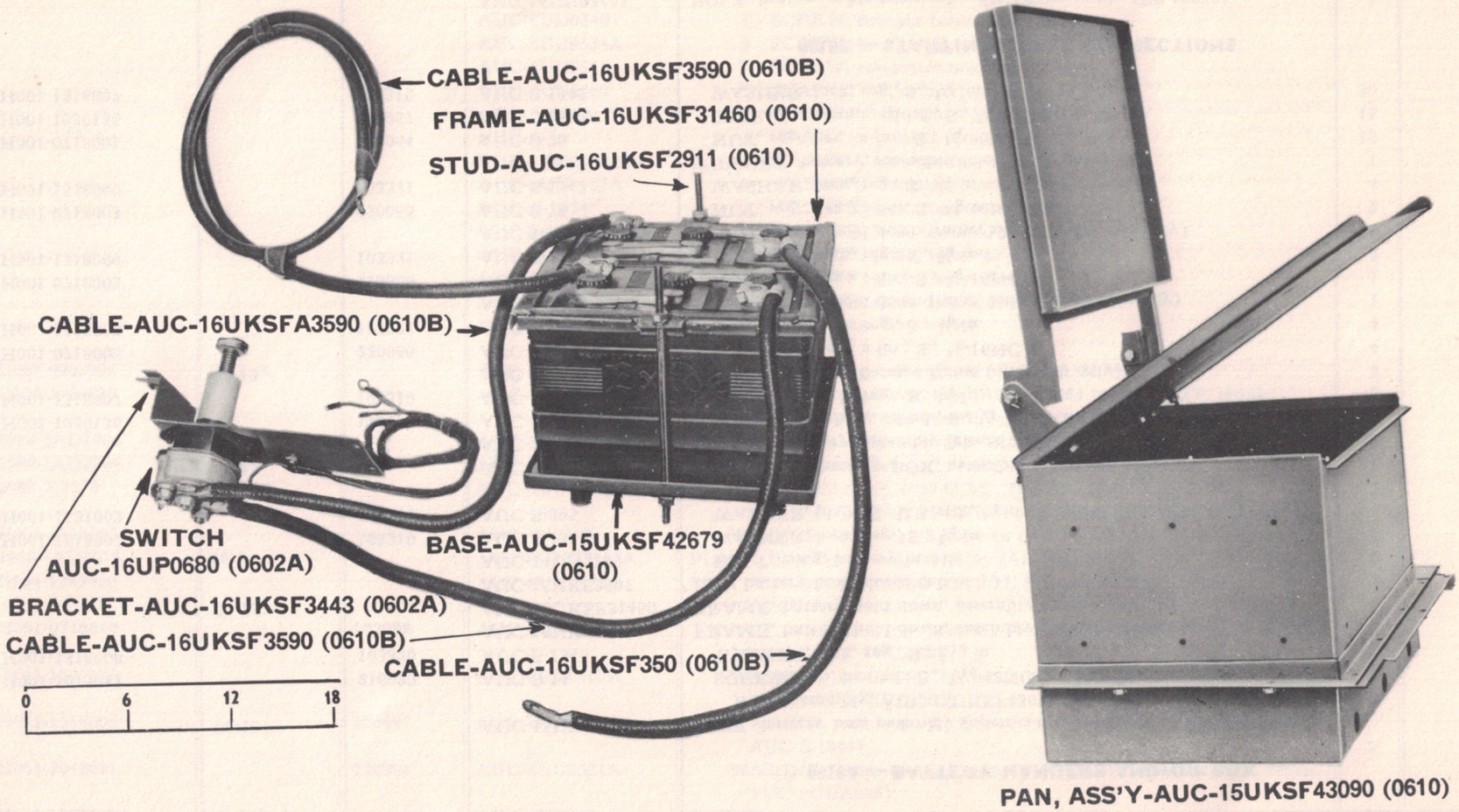

FIGURE 06-13 BATTERIES, HANGERS AND STARTING CABLES RA PD 346206

Note Symbol	Official Stock Number	Figure Number	Part Number		ITEM	Quan. Reqd. per Unit Assy.	Unit Price
			Ordnance	Manufacturer			
Col. 1	Col. 2	Col. 3	Col. 4	Col. 5	Col. 6	Col. 7	Col. 8
					0610A — BATTERY HANGERS AND/OR BOX		
		06-13		AUC-15UKSF42679	BASE, battery box, assembly (open cab only) (part of PAN, w/battery BOX, assembly, AUC-15UKSF43090)	1	
H-1	H001-1013017		216920	AUC-S-14	SCREW, cap, hex-hd., S., 5/16-18NC-2 x 3/4	4	
H-1	H001-1518008		103320	AUC-S-1346	WASHER, lock, reg., S., 5/16 in.	4	
				AUC-16UKS31460	FRAME, battery hold down, assembly (closed cab only)	1	
		06-13		AUC-16UKSF31460	FRAME, battery hold down, assembly (open cab only)	1	
				AUC-16UKS3497	LID, battery box (closed cab only)	1	
				AUC-14UN2189	BOLT, wing, battery box lid	2	
H-1	H001-1518007		103319	AUC-S-1345	WASHER, lock, reg., S., 1/4 in.	2	
H-1	H001-1531002		106261	AUC-S-395	WASHER, plain, S., U.S. std., 1/4 in. (5/16 in. I.D. x 3/4 in. O.D. x 1/16 in. thick)	2	
		06-13		AUC-15UKSF43090	PAN, seat, w/battery BOX, assembly (open cab only)	1	
				AUC-16UKS31520	SHIELD, battery, assembly (closed cab only)	1	
H-1	H001-1030136		113957	AUC-S-1614A	SCREW, machine, rd-hd., S., 1/4-20NC-2 x 3/4	6	
H-1	H001-1518007		103319	AUC-S-1345	WASHER, lock, reg., S., 1/4 in.	6	
		06-13		AUC-16UKSF2911	STUD, battery hold down frame (open cab only)	2	
H-1	H001-0718003		220066	AUC-S-78	NUT, reg., hex., s-fin., S., 3/8-16NC-2	4	
H-1	H001-1518009		103321	AUC-S-1347	WASHER, lock, reg., S., 3/8 in.	4	
				AUC-16UKS9911	STUD, battery hold down frame, long (closed cab only)	1	
H-1	H001-0718003		220066	AUC-S-78	NUT, reg., hex., s-fin., S., 3/8-16NC-2	1	
H-1	H001-1518009		103321	AUC-S-1347	WASHER, lock, reg., S., 3/8 in.	2	
				AUC-16UKSA9911	STUD, battery hold down frame, short (closed cab only)	2	
H-1	H001-0718003		220066	AUC-S-78	NUT, reg., hex., s-fin., S., 3/8-16NC-2	2	
H-1	H001-1518009		103321	AUC-S-1347	WASHER, lock, reg., S., 3/8 in.	4	
				AUC-16UKS31110	SUPPORT, battery, assembly (closed cab only)	1	
H-1	H001-0718001		220064	AUC-S-76	NUT, reg., hex., s-fin., S., 1/4-20NC-2	15	
H-1	H001-1030136		113957	AUC-S-1614A	SCREW, machine, rd-hd., S., 1/4-20NC-2 x 3/4	15	
H-1	H001-1518007		103319	AUC-S-1345	WASHER, lock, reg., S., 1/4 in.	30	
					0610B — STARTING CABLE CONNECTIONS		
				AUC-16UU03405	BOLT, battery cable terminal, w/NUT, assembly (ES-12230)	2	
				AUC-16UKSF21341	BRACKET, battery cable clip (open cab only)	2	
				AUC-16UKS350	CABLE, battery ground, assembly (closed cab only)	1	
H-1	H001-0718003		220066	AUC-S-78	NUT, reg., hex., s-fin., S., 3/8-16NC-2	1	
H-1	H001-1013032		213729	AUC-S-23	SCREW, cap, hex-hd., S., 3/8-16NC-2 x 1	1	
H-1	H001-1518009		103321	AUC-S-1347	WASHER, lock, reg., S., 3/8 in.	2	

		06-13		AUC-16UKSF350	CABLE, battery ground, assembly (open cab only)	1
H-1	H001-0718003		220066	AUC-S-78	NUT, reg., hex., s-fin., S., 3/8-16NC-2	1
H-1	H001-1013032		213729	AUC-S-23	SCREW, cap, hex-hd., S., 3/8-16NC-2 x 1	1
H-1	H001-1518009		103321	AUC-S-1347	WASHER, lock, reg., S., 3/8 in.	2
				AUC-16UKSB3590	CABLE, battery to magnetic switch, assembly (closed cab only)	1
		06-13		AUC-16UKSFB3590	CABLE, battery to magnetic switch, assembly (open cab only)	1
				AUC-16UKS3580	CABLE, cranking motor, assembly (closed cab only)	1
				AUC-16UKSA31791	CABLE, instrument supply, assembly (used on all cars from Serial No. U-7144-T-A14100 and up)	1
				AUC-16UKS31791	CABLE, instrument supply, assembly (used on all cars up to and including Serial No. U-7144-T-A14099)	1
H-1	H001-1028067		100957	AUC-S-6173A	SCREW, machine, rd-hd., br., No. 8 (.164)—32NC-2 x 1/4	1
				AUC-16UKSFA3600	CABLE, magnetic switch, assembly (used on all cars from Serial No. U-7144-T-A14100 and up)	1
				AUC-16UKSF3600	CABLE, magnetic switch, assembly (used on all cars up to and including Serial No. U-7144-T-A14099)	1
H-1	H001-1028067		100957	AUC-S-6173A	SCREW, machine, rd-hd., br., No. 8 (.164)—32NC-2 x 1/4	1
				AUC-16UKSA3590	CABLE, negative, battery to series-parallel switch, assembly (closed cab only)	1
		06-13		AUC-16UKSFA3590	CABLE, negative, battery to series-parallel switch, short, assembly (open cab only)	1
				AUC-16UKS3590	CABLE, positive, battery to series-parallel switch, assembly (closed cab only)	1
		06-13		AUC-16UKSF3590	CABLE, positive, battery to series-parallel switch, long, assembly (open cab only)	1
				AUC-16CK2308	CLIP, battery cable (battery to magnetic switch) (open cab only)	2
H-1	H001-0718001		220064	AUC-S-76	NUT, reg., hex., s-fin., S., 1/4-20NC-2	2
H-1	H001-5150151		133043	AUC-S-1614AC	SCREW, machine, rd-hd., S., cd-pltd., 1/4-20NC-2 x 3/4	2
H-1	H001-1518007		103319	AUC-S-1345	WASHER, lock, reg., S., 1/4 in.	4
H-4	H004-0327567			AUC-16W2487	CLIP, magnetic switch cable (open cab only)	1
H-1	H001-0718001		220064	AUC-S-76	NUT, reg., hex., s-fin., S., 1/4-20NC-2	1
H-1	H001-1030136		113957	AUC-S-1614A	SCREW, machine, rd-hd., S., 1/4-20NC-2 x 3/4	1
H-1	H001-1518007		103319	AUC-S-1345	WASHER, lock, reg., S., 1/4 in.	2
H-4	H004-0365726			AUC-16UBL2252	TERMINAL, battery ground cable	1
				AUC-16SA2499	TERMINAL, battery to magnetic switch cable	1
				AUC-16C2499	TERMINAL, battery to series-parallel switch cable (positive)	1
H-4	H004-0365726			AUC-16UBL2252	TERMINAL, battery to series-parallel switch cable (positive)	1
				AUC-16CDL0499	TERMINAL, battery to series-parallel switch cable (positive and negative)	2
				AUC-16SA2253	TERMINAL, battery to series-parallel switch cable (positive and negative)	2
				AUC-16UKSB2623	WIRE, jumper, magnetic switch feed, assembly (closed cab only)	1
				AUC-16UKS2623	WIRE, jumper, magnetic switch to circuit breaker, assembly (closed cab only)	1
H-1	H001-1028067		100957	AUC-S-6173A	SCREW, machine, rd-hd., br., No. 8 (.164)—32NC-2 x 1/4	1

Note Symbol	Official Stock Number	Figure Number	Part Number		ITEM	Quan. Reqd. per Unit Assy.	Unit Price
			Ordnance	Manufacturer			
Col. 1	Col. 2	Col. 3	Col. 4	Col. 5	Col. 6	Col. 7	Col. 8
					0610B — STARTING CABLE CONNECTIONS — Continued		
				AUC-16UKSAB2623	WIRE, jumper, series-parallel switch to circuit breaker, assembly (used on all cars from Serial No. U-7144-T-A14100 and up)	1	
H-1	H001-1028067		100957	AUC-S-6173A	SCREW, machine, rd-hd., br., No. 8 (.164)—32NC-2 x ¼	1	
				AUC-16UKSAC2623	WIRE, jumper, series-parallel switch to circuit breaker, assembly (used on all cars from Serial No. U-7144-T-A14100 and up)	1	
H-1	H001-1028067		100957	AUC-S-6173A	SCREW, machine, rd-hd., br., No. 8 (.164)—32NC-2 x ¼	1	
				AUC-16UKSA2623	WIRE, jumper, series-parallel switch to circuit breaker, assembly (used on all cars up to and including Serial No. U-7144-T-A14099)	1	
H-1	H001-1028067		100957	AUC-S-6173A	SCREW, machine, rd-hd., br., No. 8 (.164)—32NC-2 x ¼	1	
				AUC-16UKSN2623	WIRE, jumper, series-parallel switch to circuit breaker, assembly (used on all cars up to and including Serial No. U-7144-T-A14099)	1	
H-1	H001-1028067		100957	AUC-S-6173A	SCREW, machine, rd-hd., br., No. 8 (.164)—32NC-2 x ¼	1	
				AUC-16UKSC2623	WIRE, jumper, series-parallel switch to magnetic switch, assembly (closed cab only)	1	

Afd. DOCUMENTATIE
Datum 2 2 juni 1960
Par.

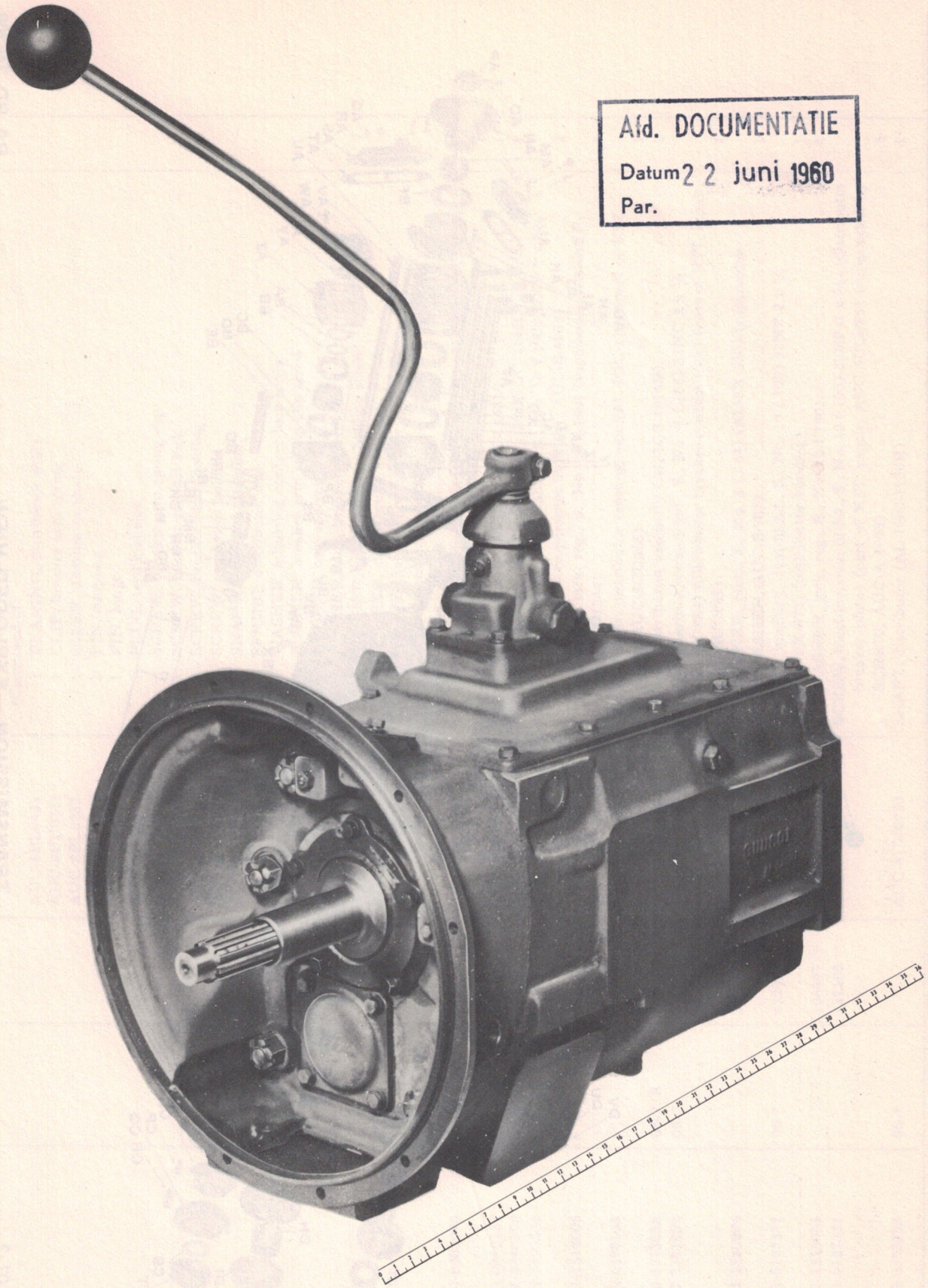

FIGURE 07-1 TRANSMISSION — ASSEMBLY RA PD 346207

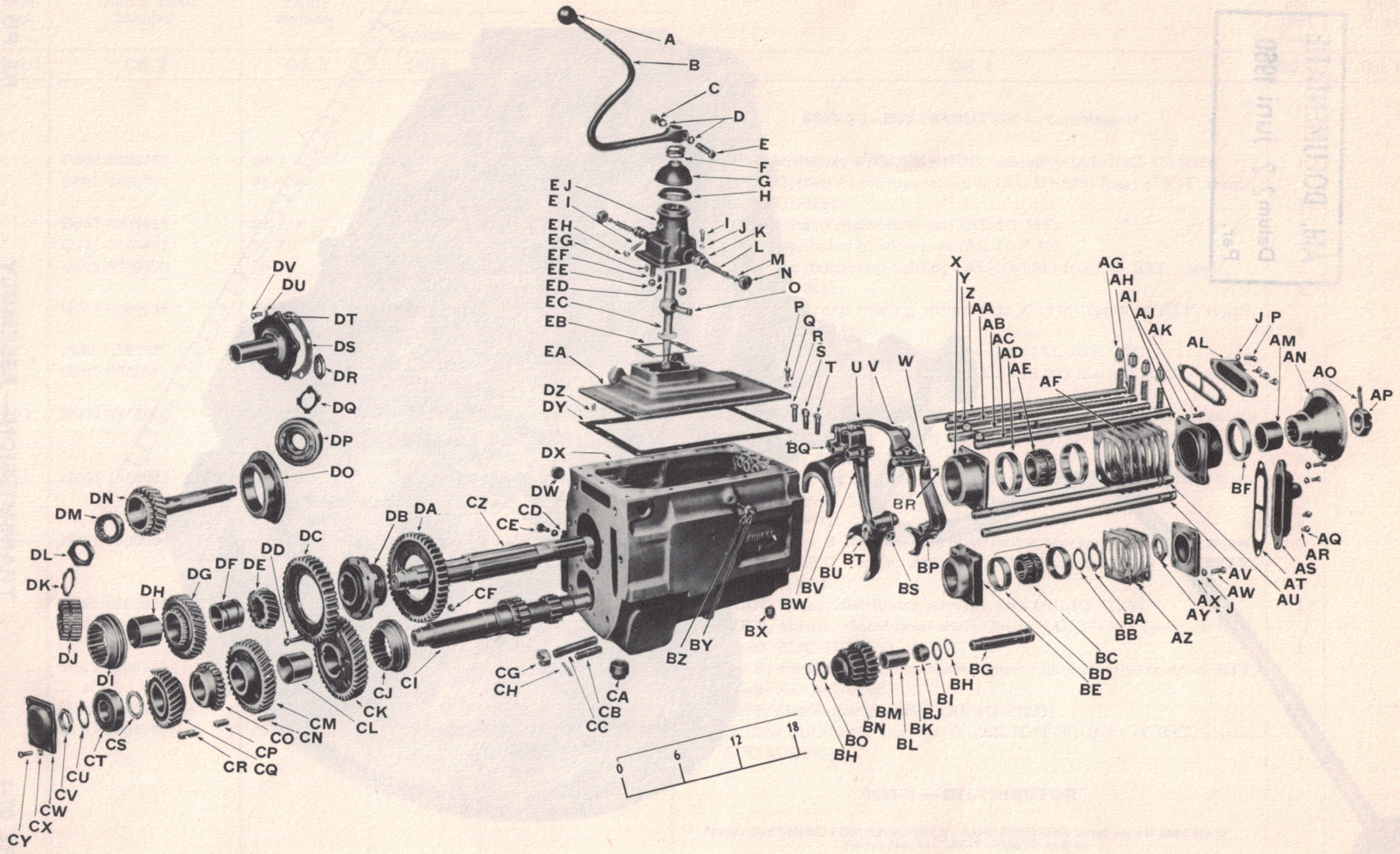

FIGURE 07-2 TRANSMISSION — EXPLODED VIEW RA PD 346208

FIGURE 07-2 TRANSMISSION—EXPLODED VIEW RA PD 346208 A

KEY	ITEM	PART NO.	GROUP
A	BALL, gear shift lever	AUC-10T2408	0706A
B	LEVER, gear shift	AUC-10UU423	0706A
C	NUT, gear shift lever	AUC-S-1420	0706A
D	WASHER, gear shift lever	AUC-S-1349	0706A
E	SCREW, gear shift lever	AUC-S-1868	0706A
F	SPRING, gear shift lever socket	AUC-10UU2391	0706A
G	COVER, gear shift lever socket	AUC-10T205	0706A
H	OIL SEAL, shift lever socket	AUC-10D2339	0706A
I	SCREW, gear shift lever housing	AUC-S-23	0706
J	WASHER, shift lever housing screw	AUC-S-1347	0706
K	PLUNGER, reverse lockout	AUC-3UU21129	0706A
L	SPRING, lockout plunger	AUC-2SA2832	0706A
M	RIVET, lockout plunger spring	AUC-S-568	0706A
N	NUT, lockout plunger spring	AUC-3UU21131	0706A
O	PIN, center, shift lever stub	AUC-10UU2409	0706A
P	SCREW, transmission case cover	AUC-S-23	0701
Q	WASHER, case cover screw	AUC-S-1347	0701
R	SCREW, 1st & 2nd speed fork	AUC-3DF2629	0706C
S	SCREW, 3rd & 4th speed fork	AUC-3A2629	0706C
T	SCREW, reverse shift fork	AUC-3TF2629	0706C
U	ARM, reverse gear shift rod	AUC-3DF4188	0706C
V	FORK, 1st & 2nd gear shift	AUC-3DF387A	0706C
W	PIN, connecting	AUC-3DF2928	0706C
X	HOUSING, main shaft rear bearing	AUC-3TF3347A	0704
Y	PLUNGER, shift rod interlock	AUC-3TF2224A	0706B
Z	ROD, 1st & 2nd speed shift	AUC-3UU384	0706B
AA	ROD, 3rd & 4th speed shift	AUC-3UU383	0706B
AB	ROD, 5th speed shift, upper	AUC-3UU3189	0706B
AC	ROD, reverse shift, upper	AUC-3UU385	0706B
AD	CUP, bearing, main shaft, rear	AUC-3TF262	0704
AE	CONE, bearing, main shaft, rear	AUC-3TF261	0704
AF	SHIM SET, main shaft rear bearing cap	AUC-3UU0196	0704
AG	PLUNGER, gear shift rod	AUC-3UU2345	0706B
AH	SPRING, gear shift rod	AUC-3T111	0706B
AI	CAP, main shaft rear bearing	AUC-3UU3414	0704
AJ	WASHER, main shaft rear bearing cap	AUC-S-1348	0704
AK	SCREW, main shaft rear bearing cap	AUC-S-923	0704
AL	COVER, rear shift rod, top	AUC-3DF324	0706B
AM	SPACER, main shaft, rear	AUC-3UU21155	0704
AN	FLANGE, companion	AUC-3CA3201	0700
AO	PIN, cotter, companion flange nut	AUC-S-2216	0700
AP	NUT, companion flange	AUC-3L2103	0700
AQ	NUT, shift rod stop	AUC-S-82	0706B
AR	SCREW, shift rod stop	AUC-S-1235	0706B
AS	COVER, rear shift rod, side	AUC-3UDF324	0706B
AT	GASKET, rear shift rod cover	AUC-3DF2152	0706B
AU	ROD, 5th speed shift, lower	AUC-3UNF3189	0706B
AV	ROD, reverse shift, lower	AUC-3UNF385	0706B
AW	SCREW, countershaft bearing cap	AUC-S-1879	0704C
AX	CAP, countershaft rear bearing	AUC-3TF3977A	0704C
AY	NUT, countershaft rear bearing	AUC-3DF2103	0704C
AZ	SHIM SET, countershaft rear bearing cap	AUC-3UU0156	0704C
BA	WASHER, countershaft bearing nut	AUC-4Y228	0704C
BB	WASHER, countershaft rear bearing	AUC-S-380	0704C
BC	CUP, bearing, countershaft, rear	AUC-3T262	0704C
BD	CONE, bearing, countershaft, rear	AUC-3T261	0704C
BE	HOUSING, countershaft rear bearing	AUC-3TF3976A	0704C
BF	OIL SEAL, main shaft	AUC-S-6051	0704
BG	SHAFT, reverse gear	AUC-3TFB206	0704C
BH	SNAP RING, reverse gear bearing	AUC-3TFB21075	0704B
BI	WASHER, reverse bearing, rear	AUC-3TFB21074	0704B
BJ	RING, separator, reverse bearing	AUC-3TFB21076	0704B
BK	BEARING, needle, reverse gear	AUC-3TFB21073	0704B
BL	KEY, reverse gear sleeve	AUC-3TFB21072	0704B
BM	SLEEVE, reverse gear	AUC-3TFB21071	0704B
BN	GEAR, reverse, assembly	AUC-3TFB31580A	0704B
BO	WASHER, reverse bearing, front	AUC-3TFC21074	0704B
BP	FORK, reverse gear	AUC-3TFB435	0706C
BQ	JAW, 1st & 2nd speed shift rod	AUC-3DF2191	0706C
BR	PIN, reverse shift rod arm	AUC-S-3253	0706C
BS	NUT, 5th speed arm and fork pin	AUC-S-850	0706C

FIGURE 07-2 TRANSMISSION—EXPLODED VIEW RA PD 346208 B

KEY	ITEM	PART NO.	GROUP
BT	PIN, 5th speed rod arm and fork	AUC-3DF2927	0706C
BU	FORK, 5th speed shift	AUC-3DF4346A	0706C
BV	ARM, 5th speed shift rod	AUC-3DF4971	0706C
BW	FORK, 3rd & 4th speed gear shift	AUC-3TF415C	0706C
BX	PLUG, pipe, oil level	AUC-S-2490	0701
BY	SCREW, guide, reverse shift fork	AUC-3DF2925	0706B
BZ	NUT, reverse shift fork screw	AUC-S-77	0706B
CA	PLUG, pipe, oil level	AUC-S-4157	0701
CB	STUD, case to clutch housing	AUC-3D2332	0701
CC	STUD, case to clutch housing	AUC-3DF2332	0701
CD	COVER, power take-off opening	AUC-3UU3154	0701
CE	SCREW, take-off opening cover	AUC-S-23	0701
CF	NUT, 1st & 2nd speed slide gear	AUC-S-1418	0704B
CG	NUT, case to clutch housing	AUC-S-4203	0701
CH	PIN, case to clutch housing nut	AUC-S-2206	0701
CI	COUNTERSHAFT, assembly	AUC-3TF429BS	0704C
CJ	RING, clutch, 3rd & 4th speed	AUC-3TF3948A	0704B
CK	GEAR, 5th speed countershaft	AUC-3TF01420A	0704B
CL	BUSHING, 5th speed countershaft gear	AUC-3TF2954A	0704B
CM	GEAR, 3rd speed countershaft	AUC-3TF326A	0704B
CN	KEY, 3rd speed countershaft gear	AUC-3D2917	0704B
CO	GEAR, driving, power take-off	AUC-3UU3863	0704B
CP	KEY, power take-off driving gear	AUC-3B2914	0704B
CQ	GEAR, countershaft drive	AUC-3TF321A	0704B
CR	KEY, countershaft drive gear	AUC-3D2914	0704B
CS	WASHER, countershaft front bearing	AUC-3TF2916	0704C
CT	BEARING, countershaft, front	AUC-3TF0142B	0704C
CU	WASHER, countershaft front bearing lock nut	AUC-3TF2247	0704C
CV	NUT, countershaft front bearing	AUC-3TF2101	0704C
CW	CAP, countershaft front bearing	AUC-3TF304A	0704C
CX	WASHER, front bearing cap screw	AUC-S-1347	0704C
CY	SCREW, countershaft front bearing cap	AUC-S-23	0704C
CZ	SHAFT, main	AUC-3TF431A	0704
DA	GEAR, slide, 1st speed	AUC-3TF422A	0704B
DB	SLEEVE, 1st & 2nd speed slide gear	AUC-3TF393A	0704B
DC	GEAR, slide, 2nd speed	AUC-3TF4102A	0704B
DD	BOLT, slide gear sleeve	AUC-3TF2146	0704B
DE	GEAR, 5th speed, main shaft	AUC-3TF3179A	0704B
DF	SLEEVE, 3rd speed gear	AUC-3TF2956A	0704B
DG	GEAR, 3rd speed, assembly	AUC-3TF01410A	0704B
DH	BUSHING, 3rd speed gear	AUC-3TF2955A	0704B
DI	RING, 5th speed countershaft gear	AUC-3TF3948A	0704B
DJ	DRIVER, 3rd & 4th speeds	AUC-3TF2951A	0704B
DK	WASHER, main shaft lock nut	AUC-3S2106	0704
DL	NUT, lock, main shaft	AUC-3S2959	0704
DM	BEARING, main shaft pilot	AUC-3TF2147	0704
DN	SHAFT, drive, w/GEAR, assembly	AUC-3TF441A	0703
DO	RETAINER, drive shaft bearing	AUC-3TF3352A	0703
DP	BEARING, ball, drive shaft	AUC-3T079	0703
DQ	WASHER, drive shaft bearing	AUC-4Y228	0703
DR	NUT, drive shaft bearing	AUC-3DF2103	0703
DS	GASKET, drive shaft bearing cap	AUC-3TF3112A	0703
DT	CAP, drive shaft bearing	AUC-3TF3162A	0703
DU	WASHER, bearing cap screw	AUC-S-1347	0703
DV	SCREW, drive shaft bearing cap	AUC-S-64	0703
DW	PLUG, expansion	AUC-S-4212	0701
DX	CASE, transmission	AUC-3UU601	0701
DY	GASKET, case cover	AUC-3TF317A	0701
DZ	PIN, dowel, case cover	AUC-2Y1345	0701
EA	COVER, transmission case	AUC-3UU516	0701
EB	GASKET, lever housing	AUC-10D2249	0706
EC	STUB, gear shift lever	AUC-10UU31137	0706A
ED	KEY, gear shift lever stub	AUC-S-2345	0706A
EE	BALL, lockout plunger	AUC-S-1672	0706A
EF	SPRING, lockout plunger ball	AUC-2UU21133	0706A
EG	PIN, dowel, lever housing	AUC-3D2355	0706
EH	NUT, shift lever housing	AUC-S-2021	0706
EI	SCREW, shift lever housing	AUC-3S282A	0706
EJ	HOUSING, gear shift lever	AUC-3UU4353	0706

Note Symbol	Official Stock Number	Figure Number	Part Number		ITEM	Quan. Reqd. per Unit Assy.	Unit Price
			Ordnance	Manufacturer			
Col. 1	Col. 2	Col. 3	Col. 4	Col. 5	Col. 6	Col. 7	Col. 8
					GROUP 07 — TRANSMISSION		
					0700 — TRANSMISSION ASSEMBLY		
	0600-3CA3201	07-2		AUC-3CA3201	FLANGE, transmission companion	1	
	0600-3L2103	07-2		AUC-3L2103	NUT, transmission companion flange	1	
H-1	H001-0811058	Q7-2	103391	AUC-S-2216	PIN, cotter, split, S., 1/8 x 2 1/2	1	
	0600-3UU01168			AUC-3UU01168	GASKET SET, transmission	1	
					(Composed of:		
				AUC-3TF3117A	1 GASKET, case cover		
				AUC-3TF3112A	1 GASKET, drive shaft bearing cap		
				AUC-10D2249	1 GASKET, gear shift lever housing		
				AUC-3DF2152	2 GASKET, gear shift rod cover		
				AUC-19UV3391	1 GASKET, power take-off opening cover		
				AUC-10D2339	1 OIL SEAL, gear shift lever socket (cork))		
				AUC-3UU020	TRANSMISSION, assembly (bare)	1	
		07-1		AUC-3UU6530	TRANSMISSION, assembly, complete with clutch housing and hand control	1	
	0600-3UUA0530			AUC-3UUA0530	TRANSMISSION, complete with clutch housing and hand control, w/companion FLANGE, assembly	1	
					0701 — CASE		
	0600-3UU601	07-2		AUC-3UU601	CASE, transmission (bare)	1	
				AUC-3UU0260	CASE, transmission, assembly	1	
					(Composed of:		
				AUC-3UU601	1 CASE		
				AUC-3DF2332	1 STUD, long		
				AUC-3D2332	5 STUD, short)		
H-1	H001-0722008	07-2	218493	AUC-S-4203	NUT, slotted, heavy, S., 3/4-10NC-2	6	
H-1	H001-0811054	07-2	103387	AUC-S-2206	PIN, cotter, split, S., 1/8 x 1 1/2	6	
	0600-3UU516	07-2		AUC-3UU516	COVER, transmission case	1	
		07-2		AUC-3UU3154	COVER, transmission power take-off opening	1	
H-1	H001-1013032	07-2	213729	AUC-S-23	SCREW, cap, hex-hd., S., 3/8-16NC-2 x 1	6	
H-1	H001-1518009		103321	AUC-S-1347	WASHER, lock, reg., S., 3/8 in.	6	
				AUC-3UU0816	COVER, transmission, w/dowel PIN, assembly	1	
H-1	H001-1013032	07-2	213729	AUC-S-23	SCREW, cap, hex-hd., S., 3/8-16NC-2 x 1	10	

Note Symbol	Official Stock Number	Figure Number	Part Number		ITEM	Quan. Reqd. per Unit Assy.	Unit Price
			Ordnance	Manufacturer			
Col. 1	Col. 2	Col. 3	Col. 4	Col. 5	Col. 6	Col. 7	Col. 8
					0701 — CASE — Continued		
H-1	H001-1518009	07-2	103321	AUC-S-1347	WASHER, lock, reg., S., 3/8 in.	10	
		07-2		AUC-3TF317A	GASKET, transmission case cover (part of GASKET SET, AUC-3UU01168)	1	
				AUC-19UV3391	GASKET, transmission power take-off opening cover (part of GASKET SET, AUC-3UU01168)	1	
	0600-2Y1345	07-2		AUC-2Y1345	PIN, dowel, transmission case cover	2	
				AUC-3D2355	PIN, dowel, transmission case cover	2	
H-6	H006-0282480	07-2	541402	AUC-S-4212	PLUG, expansion, S., 1 1/4 in. diam. (transmission case)	2	
				AUC-3A01111	PLUG, magnetic, transmission drain (LI-405P)	1	
H-6	H006-0283815	07-2	219199	AUC-S-2490	PLUG, pipe, sq-hd., black, 1/2 in. (transmission case, summer oil level)	1	
H-6	H006-0283830	07-2	219305	AUC-S-4157	PLUG, pipe, sq-hd., black, 1 1/4 in. (transmission case, winter oil level)	1	
	0600-3DF2332	07-2		AUC-3DF2332	STUD, transmission case to clutch housing, long	1	
	0600-3D2332	07-2		AUC-3D2332	STUD, transmission, case to clutch housing, short	5	
					0703 — MAIN DRIVE PINION AND BEARINGS		
	0600-3TF3162A	07-2		AUC-3TF3162A	CAP, transmission drive shaft bearing	1	
H-1	H001-1013033	07-2	213733	AUC-S-64	SCREW, cap, hex-hd., S., 3/8-16NC-2 x 1 1/4	5	
H-1	H001-1518009	07-2	103321	AUC-S-1347	WASHER, lock, reg., S., 3/8 in.	5	
H-12	H012-4000012	07-2		AUC-3T079	BEARING, ball, transmission drive shaft (ND-7409-XL)	1	
		07-2		AUC-3TF3112A	GASKET, transmission drive shaft bearing cap (part of GASKET SET, AUC-2UU01168)	1	
	0600-3DF2103	07-2		AUC-3DF2103	NUT, lock, transmission drive shaft bearing	1	
	0600-3TF3352A	07-2		AUC-3TF3352A	RETAINER, transmission drive shaft bearing	1	
	0600-3TF341A			AUC-3TF341A	SHAFT, drive, transmission, w/GEAR (superseded by SHAFT, w/GEAR, AUC-3TF441A)	1	
		07-2		AUC-3TF441A	SHAFT, drive, transmission, w/GEAR (supersedes SHAFT, w/GEAR, AUC-3TF341A)	1	
	0600-3Y228			AUC-3Y228	WASHER, lock, transmission drive shaft bearing (superseded by WASHER, AUC-4Y228)	1	
	0600-4Y228	07-2		AUC-4Y228	WASHER, lock, transmission drive shaft bearing (supersedes WASHER, AUC-3Y228)	1	
					0704 — MAIN SHAFT AND BEARINGS		
		07-2		AUC-3TF2147	BEARING, roller, assembly, complete (SKF-NJ-2306/C3) (transmission main shaft pilot)	1	

	0600-3UU3414	07-2		AUC-3UU3414	CAP, transmission main shaft rear bearing	1
H-1	H001-1013055	07-2	213770	AUC-S-923	SCREW, cap, hex-hd., S., 7/16-14NC-2 x 1½	4
H-1	H001-1518010	07-2	103322	AUC-S-1348	WASHER, lock, reg., S., 7/16 in.	4
H-12	H012-6102480	07-2	705047	AUC-3TF261	CONE, bearing, tapered (TIM-377) (transmission main shaft, rear)	2
H-12	H012-6202070	07-2	706646	AUC-3TF262	CUP, bearing, tapered (TIM-372-A) (transmission main shaft, rear)	2
	0600-3TF3347A	07-2		AUC-3TF3347A	HOUSING, transmission main shaft rear bearing	1
	0600-3S2959	07-2		AUC-3S2959	NUT, lock, transmission main shaft	1
		07-2		AUC-S-6051	OIL SEAL, transmission main shaft (CM-375228)	1
		07-2		AUC-3TF431A	SHAFT, main, transmission (bare)	1
	0600-3UU01174			AUC-3UU01174	SHAFT, main, transmission, w/NUTS, assembly	1
					(Composed of:	
				AUC-3L2103	1 NUT, flange	
				AUC-3S2959	1 NUT, lock	
				AUC-3TF431A	1 SHAFT, main)	
				AUC-3DF3196B	SHIM, transmission main shaft rear bearing cap, .005 in. (part of SHIM SET, AUC-3UU0196)	AR
				AUC-3DF9196A	SHIM, transmission main shaft rear bearing cap, .008 in.	5
				AUC-3DF3196	SHIM, transmission main shaft rear bearing cap, .010 in. (part of SHIM SET, AUC-3UU0196)	5
	0600-3UU0196	07-2		AUC-3UU0196	SHIM SET, transmission main shaft rear bearing cap	1
					(Composed of:	
				AUC-3DF3196B	6 SHIM, .005 in.	
				AUC-3DF3196	5 SHIM, .010 in.)	
				AUC-16UU2568	SPACER, transmission main shaft, rear (superseded by SPACER, AUC-3UU21155)	1
		07-2		AUC-3UU21155	SPACER, transmission main shaft, rear (supersedes SPACER, AUC-16UU2568)	1
	0600-3S2106	07-2		AUC-3S2106	WASHER, lock, transmission main shaft lock nut	1
					0704B — GEARS	
	0600-3TFB21073S			AUC-3TFB21073S	BEARING, needle, transmission reverse gear (set of 106 pieces)	1
		07-2		AUC-3TFB21073	BEARING, needle, transmission reverse gear	106
	0600-3TF2146	07-2		AUC-3TF2146	BOLT, transmission first and second speed slide gear sleeve	8
				AUC-3TF2954	BUSHING, transmission fifth speed countershaft gear (superseded by BUSHING, AUC-3TF2954A)	1
		07-2		AUC-3TF2954A	BUSHING, transmission fifth speed countershaft gear (supersedes BUSHING, AUC-3TF2954)	1
				AUC-3TF2955	BUSHING, transmission main shaft third speed gear (superseded by BUSHING, AUC-3TF2955A)	1
		07-2		AUC-3TF2955A	BUSHING, transmission main shaft third speed gear (supersedes BUSHING, AUC-3TF2955)	1
	0600-3TF2951A	07-2		AUC-3TF2951A	DRIVER, clutch, transmission third and fourth speeds	1
	0600-3TF321A	07-2		AUC-3TF321A	GEAR, drive, transmission countershaft	1
	0600-3UU3863	07-2		AUC-3UU3863	GEAR, driving, transmission power take-off	1
				AUC-3TF3949A	GEAR, fifth speed, transmission countershaft	1

Note Symbol	Official Stock Number	Figure Number	Part Number		ITEM	Quan. Reqd. per Unit Assy.	Unit Price
			Ordnance	Manufacturer			
Col. 1	Col. 2	Col. 3	Col. 4	Col. 5	Col. 6	Col. 7	Col. 8
					0704B — GEARS — Continued		
	0600-3TF01420A	07-2		AUC-3TF01420A	GEAR, fifth speed, transmission countershaft, w/BUSHING, assembly.. (Composed of:	1	
				AUC-3TF2954A	1 BUSHING		
				AUC-3TF3949A	1 GEAR)		
	0600-3TF3179A	07-2		AUC-3TF3179A	GEAR, fifth speed, transmission main shaft.....	1	
	0600-3TFB327			AUC-3TFB327	GEAR, reverse, transmission (superseded by GEAR, w/needle BEARINGS, assembly, AUC-3TFB31580).....	1	
				AUC-3TFB31580	GEAR, reverse, transmission, w/needle BEARINGS, assembly (superseded by GEAR, w/needle BEARINGS, assembly, AUC-3TFB31580A).....	1	
	0600-3TFB31580A	07-2		AUC-3TFB31580A	GEAR, reverse, transmission, w/needle BEARINGS, assembly (supersedes GEAR, w/needle BEARINGS, assembly, AUC-3TFB31580)... (Composed of:	1	
				AUC-3TFB21073	106 BEARING, needle		
				AUC-3TFB327	1 GEAR		
				AUC-3TFB21072	1 KEY, sleeve		
				AUC-3TFB21076	1 RING, separator		
				AUC-3TFB21071	1 SLEEVE		
				AUC-3TFB21075	2 SNAP RING		
				AUC-3TFB21074	1 WASHER		
				AUC-3TFC21074	1 WASHER)		
				AUC-3TF0200A	GEAR, slide, transmission first and second speed, assembly..... (Composed of:	1	
				AUC-3TF2146	8 BOLT		
				AUC-3TF422	1 GEAR, first speed		
				AUC-3TF4102A	1 GEAR, second speed		
				AUC-S-1418	8 NUT		
				AUC-3TF393A	1 SLEEVE)		
	0600-3TF422A	07-2		AUC-3TF422A	GEAR, slide, transmission first speed.....	1	
	0600-3TF4102A	07-2		AUC-3TF4102A	GEAR, slide, transmission second speed.....	1	
	0600-3TF326A	07-2		AUC-3TF326A	GEAR, third speed, transmission countershaft.....	1	
				AUC-3TF318A	GEAR, third speed, transmission main shaft.....	1	
	0600-3TF01410A	07-2		AUC-3TF01410A	GEAR, third speed, transmission main shaft, w/BUSHING, assembly ... (Composed of:	1	
				AUC-3TF2955A	1 BUSHING		
				AUC-3TF318A	1 GEAR)		

	0600-3D2914	07-2		AUC-3D2914	KEY, transmission countershaft drive gear	1
	0600-3B2914	07-2		AUC-3B2914	KEY, transmission power take-off driving gear	1
	0600-3D2917	07-2		AUC-3D2917	KEY, transmission third speed countershaft gear	1
H-1	H001-4167600	07-2	103026	AUC-S-1418	NUT, light, hex., s-fin., S., 3/8-24NF-2 (transmission first and second speed slide gear)	8
	0600-3TF3948A	07-2		AUC-3TF3948A	RING, clutch, transmission fifth speed countershaft gear	1
	0600-3TF3948A	07-2		AUC-3TF3948A	RING, clutch, transmission third and fourth speed	1
		07-2		AUC-3TFB21076	RING, separator, transmission reverse gear needle bearing	1
	0600-3TF393A	07-2		AUC-3TF393A	SLEEVE, transmission first and second speed slide gear	1
	0600-3TF2956A	07-2		AUC-3TF2956A	SLEEVE, transmission main shaft third speed gear	1
	0600-3TFB21071	07-2		AUC-3TFB21071	SLEEVE, transmission reverse gear	1
	0600-3TFB21072	07-2		AUC-3TFB21072	KEY, transmission reverse gear sleeve	1
	0600-3TFB21075	07-2		AUC-3TFB21075	SNAP RING, transmission reverse gear needle bearing	2
	0600-3TFC21074	07-2		AUC-3TFC21074	WASHER, transmission reverse gear needle bearing, front	1
	0600-3TFB21074	07-2		AUC-3TFB21074	WASHER, transmission reverse gear needle bearing, rear	1
					0704C — COUNTERSHAFT AND REVERSE IDLER SHAFT	
H-12	H012-0707664	07-2	707664	AUC-3TF0142B	BEARING, roller, assembly, complete (HY-R1309TS) (transmission countershaft, front)	1
		07-2		AUC-3TF304A	CAP, transmission countershaft front bearing	1
H-1	H001-1013032	07-2	213729	AUC-S-23	SCREW, cap, hex-hd., S., 3/8-16NC-2 x 1	4
H-1	H001-1518009	07-2	103321	AUC-S-1347	WASHER, lock, reg., S., 3/8 in.	4
		07-2		AUC-3TF3977A	CAP, transmission countershaft rear bearing housing	1
H-1	H001-1013035	07-2	217022	AUC-S-1879	SCREW, cap, hex-hd., S., 3/8-16NC-2 x 1 3/4	4
H-1	H001-1518009		103321	AUC-S-1347	WASHER, lock, reg., S., 3/8 in.	4
H-12	H012-6101360	07-2	705018	AUC-3T261	CONE, bearing, tapered (TIM-336) (transmission countershaft, rear)	2
				AUC-3TF429B	COUNTERSHAFT, transmission (superseded by COUNTERSHAFT, w/NUT, assembly, AUC-3TFB429BS)	1
				AUC-3UU070	COUNTERSHAFT, transmission, w/GEARS and BEARINGS, assembly	1
	0600-3TFB429BS			AUC-3TFB429BS	COUNTERSHAFT, transmission, w/NUTS, assembly (superseded by COUNTERSHAFT, w/NUTS, assembly, AUC-3TF429BS)	1
	0600-3TF429BS	07-2		AUC-3TF429BS	COUNTERSHAFT, transmission, w/NUTS, assembly (supersedes COUNTERSHAFT, w/NUTS, assembly, AUC-3TFB429BS)	1
					(Composed of:	
				AUC-3TF429B	1 COUNTERSHAFT	
				AUC-3TF2101	1 NUT, lock, front bearing	
				AUC-3DF2103	1 NUT, lock, rear bearing)	
H-12	H012-6201500	07-2	706634	AUC-3T262	CUP, bearing, tapered (TIM-332) (transmission countershaft, rear)	2
	0600-3TF3976A	07-2		AUC-3TF3976A	HOUSING, transmission countershaft rear bearing	1
	0600-3TF2101	07-2		AUC-3TF2101	NUT, lock, transmission countershaft front bearing	1
	0600-3DF2103	07-2		AUC-3DF2103	NUT, lock, transmission countershaft rear bearing	1
	0600-3TFB206	07-2		AUC-3TFB206	SHAFT, transmission reverse gear	1
				AUC-3T2156	SHIM, transmission countershaft rear bearing cap, .005 in. (part of SHIM SET, AUC-3UU0156)	8
				AUC-3T2156A	SHIM, transmission countershaft rear bearing cap, .008 in.	AR

Note Symbol	Official Stock Number	Figure Number	Part Number		ITEM	Quan. Reqd. per Unit Assy.	Unit Price
			Ordnance	Manufacturer			
Col. 1	Col. 2	Col. 3	Col. 4	Col. 5	Col. 6	Col. 7	Col. 8
					0704C — COUNTERSHAFT AND REVERSE IDLER SHAFT — Continued		
				AUC-3D2156	SHIM, transmission countershaft rear bearing cap, 1/32 in. (part of SHIM SET, AUC-3UU0156)	1	
	0600-3UU0156	07-2		AUC-3UU0156	SHIM SET, transmission countershaft rear bearing cap (Composed of: 8 SHIM, .005 in. 1 SHIM, 1/32 in.)	1	
				AUC-3T2156			
				AUC-3D2156			
		07-2		AUC-S-380	WASHER, plain, special, S., 1 5/8 in. I.D. x 2 in. O.D. x 1/16 in. thick (transmission countershaft rear bearing)	1	
	0600-3TF2916	07-2		AUC-3TF2916	WASHER, transmission countershaft front bearing	1	
	0600-3TF2247	07-2		AUC-3TF2247	WASHER, transmission countershaft front bearing lock nut	1	
	0600-4Y228	07-2		AUC-4Y228	WASHER, transmission countershaft rear bearing lock nut	1	
					0706 — GEAR SHIFT COVER OR HOUSING		
		07-2		AUC-10D2249	GASKET, gear shift lever housing (part of GASKET SET, AUC-3UU01168)	1	
	0600-3UU4353	07-2		AUC-3UU4353	HOUSING, transmission gear shift lever	1	
H-1	H001-1013032	07-2	213729	AUC-S-23	SCREW, cap, hex-hd., S., 3/8-16NC-2 x 1 (supersedes SCREW, AUC-S-46)	4	
H-1	H001-1518009	07-2	103321	AUC-S-1347	WASHER, lock, reg., S., 3/8 in.	4	
H-1	H001-0716022	07-2	219702	AUC-S-2021	NUT, jam, hex., s-fin., S., 5/16-24NF-2 (transmission gear shift lever housing) (supersedes NUT, AUC-S-3715)	1	
H-1	H001-4167560		103025	AUC-S-3715	NUT, light, hex., s-fin., S., 5/16-24NF-2 (transmission gear shift lever housing) (superseded by NUT, AUC-S-2021)	1	
	0600-3D2355	07-2		AUC-3D2355	PIN, dowel, transmission gear shift lever housing	2	
				AUC-S-46	SCREW, cap, hex-hd., S., 3/8-16NC-2 x 1 1/8 (transmission gear shift lever housing) (superseded by SCREW, AUC-S-23)	4	
	0600-3S282A	07-2		AUC-3S282A	SCREW, set, hdls., 3/8 in. long hanger-pt., S., 5/16-24NF-3 x 1 1/4 (transmission gear shift lever housing)	1	
					0706A — GEAR SHIFT LEVER AND PARTS		
		07-2		AUC-S-1672	BALL, S., 1/2 in. diam. (transmission gear shift lockout plunger)	2	
		07-2		AUC-10T2408	BALL, transmission gear shift lever	1	
	0600-10T205	07-2		AUC-10T205	COVER, transmission gear shift lever socket	1	
	0600-10UU423	07-2		AUC-10UU423	LEVER, transmission gear shift	1	
H-1	H001-0718025	07-2	218571	AUC-S-1420	NUT, reg., hex., s-fin., S., 1/2-20NF-2	1	

H-1	H001-1013288	07-2	216837	AUC-S-1868	SCREW, cap, hex-hd., S., 1/2-20NF-2 x 2 1/4	1
H-1	H001-1518011	07-2	103323	AUC-S-1349	WASHER, lock, reg., S., 1/2 in.	2
				AUC-10UU0130	LEVER, transmission gear shift, assembly	1
	0600-3UU21131	07-2		AUC-3UU21131	NUT, transmission gear shift lockout plunger spring	2
		07-2		AUC-10D2339	OIL SEAL, transmission gear shift lever socket (part of GASKET SET, AUC-3UU01168)	1
	0600-10UU2409	07-2		AUC-10UU2409	PIN, center, transmission gear shift lever stub	1
	0600-3UU21129	07-2		AUC-3UU21129	PLUNGER, transmission gear shift reverse lockout	2
H-1	H001-0924108	07-2	BMCX1	AUC-S-568	RIVET, steel, b-hd., 1/4 x 7/8 (transmission gear shift lockout plunger spring)	2
	0600-10UU2391	07-2		AUC-10UU2391	SPRING, transmission gear shift lever socket	1
	0600-2SA2832	07-2		AUC-2SA2832	SPRING, transmission gear shift lockout plunger	2
	0600-3UU21133	07-2		AUC-2UU21133	SPRING, transmission gear shift lockout plunger ball	2
	0600-10UU31137	07-2		AUC-10UU31137	STUB, transmission gear shift lever	1
H-1	H001-0518033	07-2	112139	AUC-S-2345	KEY, Woodruff, S., 1/4 x 7/8 (No. 807)	1

0706B — GEAR SHIFTER RAILS AND PARTS

	0600-3UDF324	07-2		AUC-3UDF324	COVER, transmission rear gear shift rod, side	1
H-1	H001-1013032		213729	AUC-S-23	SCREW, cap, hex-hd., S., 3/8-16NC-2 x 1	2
H-1	H001-1518009		103321	AUC-S-1347	WASHER, lock, reg., S., 3/8 in.	2
	0600-3DF324	07-2		AUC-3DF324	COVER, transmission rear gear shift rod, top	1
H-1	H001-1013032		213729	AUC-S-23	SCREW, cap, hex-hd., S., 3/8-16NC-2 x 1	2
H-1	H001-1518009		103321	AUC-S-1347	WASHER, lock, reg., S., 3/8 in.	2
		07-2		AUC-3DF2152	GASKET, transmission rear gear shift rod cover (part of GASKET SET, AUC-3UU01168)	2
H-1	H001-0718002	07-2	220065	AUC-S-82	NUT, reg., hex., s-fin., S., 5/16-18NC-2 (transmission gear shift rod stop)	5
H-1	H001-0829596		112011	AUC-S-1546	PIN, straight, cold-fin., S., .125 x 7/8 (transmission gear shift rod interlock pin retainer)	3
	0600-3Y1173			AUC-3Y1173	PIN, transmission gear shift rod interlock	1
	0600-3UU2345	07-2		AUC-3UU2345	PLUNGER, transmission gear shift rod	4
	0600-3TF2224A	07-2		AUC-3TF2224A	PLUNGER, transmission gear shift rod interlock	3
		07-2		AUC-3UNF3189	ROD, transmission fifth speed gear shift, lower	1
		07-2		AUC-3UU3189	ROD, transmission fifth speed gear shift, upper	1
		07-2		AUC-3UU384	ROD, transmission first and second speed gear shift	1
		07-2		AUC-3UNF385	ROD, transmission reverse gear shift, lower	1
		07-2		AUC-3UU385	ROD, transmission reverse gear shift, upper	1
		07-2		AUC-3UU383	ROD, transmission third and fourth speed gear shift	1
H-1	H001-1013016		193989	AUC-S-16	SCREW, cap, hex-hd., S., 5/16-18NC-2 x 5/8 (transmission rear gear shift rod cover, side)	1
		07-2		AUC-3DF2925	SCREW, guide, transmission reverse gear shift fork	1
H-1	H001-0718005	07-2	220068	AUC-S-77	NUT, reg., hex., s-fin., S., 1/2-13NC-2	1
H-1	H001-1068045	07-2		AUC-S-1235	SCREW, set, hdls., cup-pt., S., 5/16-18NC-2 x 1 (transmission gear shift rod stop)	5
	0600-3T111	07-2		AUC-3T111	SPRING, transmission gear shift rod	4
H-1	H001-1518008		103320	AUC-S-1346	WASHER, lock, reg., S., 5/16 in. (transmission rear gear shift rod cover, side)	1

Note Symbol	Official Stock Number	Figure Number	Part Number		ITEM	Quan. Reqd. per Unit Assy.	Unit Price
			Ordnance	Manufacturer			
Col. 1	Col. 2	Col. 3	Col. 4	Col. 5	Col. 6	Col. 7	Col. 8
					0706C — GEAR SHIFTER YOKES OR FORKS		
	0600-3DF4971	07-2		AUC-3DF4971	ARM, transmission fifth speed shift rod	1	
	0600-3DF4188	07-2		AUC-3DF4188	ARM, transmission reverse gear shift rod	1	
	0600-3DF2629			AUC-3DF2629	SCREW, cap, hex-hd., S., dld. f/lkg-wire, 7/16-14NC-2 x 1 3/8	3	
				AUC-3DF4346	FORK, transmission fifth speed gear shift (superseded by FORK, AUC-3DF4346A)	1	
	0500-3DF4346A	07-2		AUC-3DF4346A	FORK, transmission fifth speed gear shift (supersedes FORK, AUC-3DF4346)	1	
	0600-3DF2629			AUC-3DF2629	SCREW, cap, hex-hd., S., dld. f/lkg-wire, 7/16-14NC-2 x 1 3/8	1	
	0600-3DF387A	07-2		AUC-3DF387A	FORK, transmission first and second speed gear shift	1	
	0600-3DF2629	07-2		AUC-3DF2629	SCREW, cap, hex-hd., S., dld. f/lkg-wire, 7/16-14NC-2 x 1 3/8	1	
	0600-3TFB435	07-2		AUC-3TFB435	FORK, transmission reverse gear shift	1	
	0600-3TF2629	07-2		AUC-3TF2629	SCREW, cap, hex-hd., S., dld. f/lkg-wire, 7/16-14NC-2 x 1 5/8	1	
	0600-3TF415C	07-2		AUC-3TF415C	FORK, transmission third and fourth speed gear shift	1	
	0600-3A2629	07-2		AUC-3A2629	SCREW, cap, hex-hd., S., dld. f/lkg-wire, 7/16-20NF-2 x 1 3/8	1	
	0600-3DF2191	07-2		AUC-3DF2191	JAW, transmission first and second speed gear shift rod	1	
	0600-3DF2927	07-2		AUC-3DF2927	PIN, connecting transmission fifth speed shift rod arm and fork	1	
H-1	H001-0718004	07-2	220067	AUC-S-850	NUT, reg., hex., s-fin., S., 7/16-14NC-2	1	
	0600-3DF2928	07-2		AUC-3DF2928	PIN, connecting, transmission reverse gear shift rod arm and fork	1	
H-1	H001-0829601	07-2	112012	AUC-S-3253	PIN, straight, cold-fin., S., .125 x 1 (transmission reverse gear shift rod arm)	1	
					GROUP 08 — TRANSFER CASE		
					0800 — TRANSMISSION TRANSFER ASSEMBLY		
				AUC-19UUA0440	CASE, transmission transfer, w/companion FLANGES, assembly	1	
					(Composed of:		
				AUC-19FK6440	1 CASE, assembly		
				AUC-19FK0647	2 DEFLECTOR, dirt		
				AUC-3ES3201	1 FLANGE, driven shaft		
				AUC-3ET3201	1 FLANGE, main shaft)		
	8500-T-76-2			AUC-19FK6440	CASE, transmission transfer, w/declutch shaft companion FLANGE, assembly (TD-T-76-2)	1	
		08-1		AUC-19FKA0647	DEFLECTOR, dirt, transfer case declutch shaft flange (TD-2847-X-310)	1	
	0600-3DM3201	08-1, 2		AUC-3DM3201	FLANGE, transfer case declutch shaft (TD-3897-J-296)	1	
				AUC-3DM01750	FLANGE, transfer case declutch shaft, w/dirt DEFLECTOR, assembly	1	
					(Composed of:		
				AUC-19FKA0647	1 DEFLECTOR		
				AUC-3DM3201	1 FLANGE)		

	G116-2314760	08-1, 2		AUC-4FD0652	NUT, transfer case declutch shaft flange (TD-14X-57)	1
H-1	H001-0811056		103389	AUC-S-2208	PIN, cotter, split, S., 1/8 x 2	1
	8500-MPS-168			AUC-19UU0694	GASKET SET, transfer case (TD-MPS-168)	1
					(Composed of:	
				AUC-19SKA0433	1 GASKET, declutch shaft bearing cap	
				AUC-19FK0512	1 GASKET, declutch shaft bearing carrier	
				AUC-19FK0212	1 GASKET, driven shaft rear bearing cap	
				AUC-19FKA0208	2 GASKET, idler shaft front and rear bearing cap	
				AUC-19FK0208	1 GASKET, main shaft front bearing cap	
				AUC-19FKA0185	1 GASKET, main shaft rear bearing cap	
				AUC-19SK0189	2 GASKET, shift cover	
				AUC-19FK0185	1 GASKET, transfer case cover)	
	0600-19UU0705			AUC-19UU0705	KIT, repair, transfer case seal	1
					(Composed of:	
				AUC-19FK0431	1 OIL SEAL, declutch shaft	
				AUC-19SKB0214	2 OIL SEAL, main and driven shafts	
				AUC-19UG0624	1 PACKING, declutch shifter shaft	
				AUC-19UG0623	1 PACKING, gear shifter shaft	
				AUC-19UG0626	1 RETAINER, declutch shifter shaft packing	
				AUC-19UG0625	1 RETAINER, gear shifter shaft packing)	
	8500-MPS-164			AUC-19UU0695	SHIM SET, transfer case bearing cap (TD-MPS-164)	1
					(Composed of:	
				AUC-19FKA0581	3 SHIM, driven shaft rear bearing cap — medium	
				AUC-19FKB0581	3 SHIM, driven shaft rear bearing cap — thick	
				AUC-19FK0581	1 SHIM, driven shaft rear bearing cap — thin	
				AUC-19FK0469	2 SHIM, idler shaft front and rear bearing cap — medium	
				AUC-19FK0471	3 SHIM, idler shaft front and rear bearing cap — thick	
				AUC-19FK0468	1 SHIM, idler shaft front and rear bearing cap — thin	
				AUC-4FK0766	2 SHIM, main shaft front bearing cage — medium	
				AUC-4FK0768	3 SHIM, main shaft front bearing cage — thick	
				AUC-4FK0764	1 SHIM, main shaft front bearing cage — thin)	
					0801 — CASE	
	G509-0131905	08-1, 2		AUC-19FK0590	CASE, transfer, w/COVER, assembly (TD-A-3875-C-133)	1
H-1	H001-4167640		103027	AUC-S-2025	NUT, light, hex., s-fin., S., 7/16-20NF-2	18
				AUC-S-1599	PIN, taper, S., No. 7 (.409 x 1 1/4)	4
H-1	H001-1013054		213765	AUC-S-1881	SCREW, cap, hex-hd., S., 7/16-14NC-2 x 1 1/4	3
H-1	H001-1013270		216818	AUC-S-4445	SCREW, cap, hex-hd., S., 7/16-20NF-2 x 1 3/4	18
H-1	H001-1518010		103322	AUC-S-1348	WASHER, lock, reg., S., 7/16 in.	21
		08-1, 2		AUC-19FK0185	GASKET, transfer case cover (TD-2808-A-365) (part of GASKET SET, AUC-19UU0694)	1
H-6	H006-0283820		219301	AUC-S-4131	PLUG, pipe, sq-hd., black, 3/4 in. (transfer case oil filler)	1
	8500-P-212	08-1, 2		AUC-19FK0643	PLUG, pipe, sq-hd., black, magnetic, 1 in. (TD-P-212) (transfer case oil drain)	1

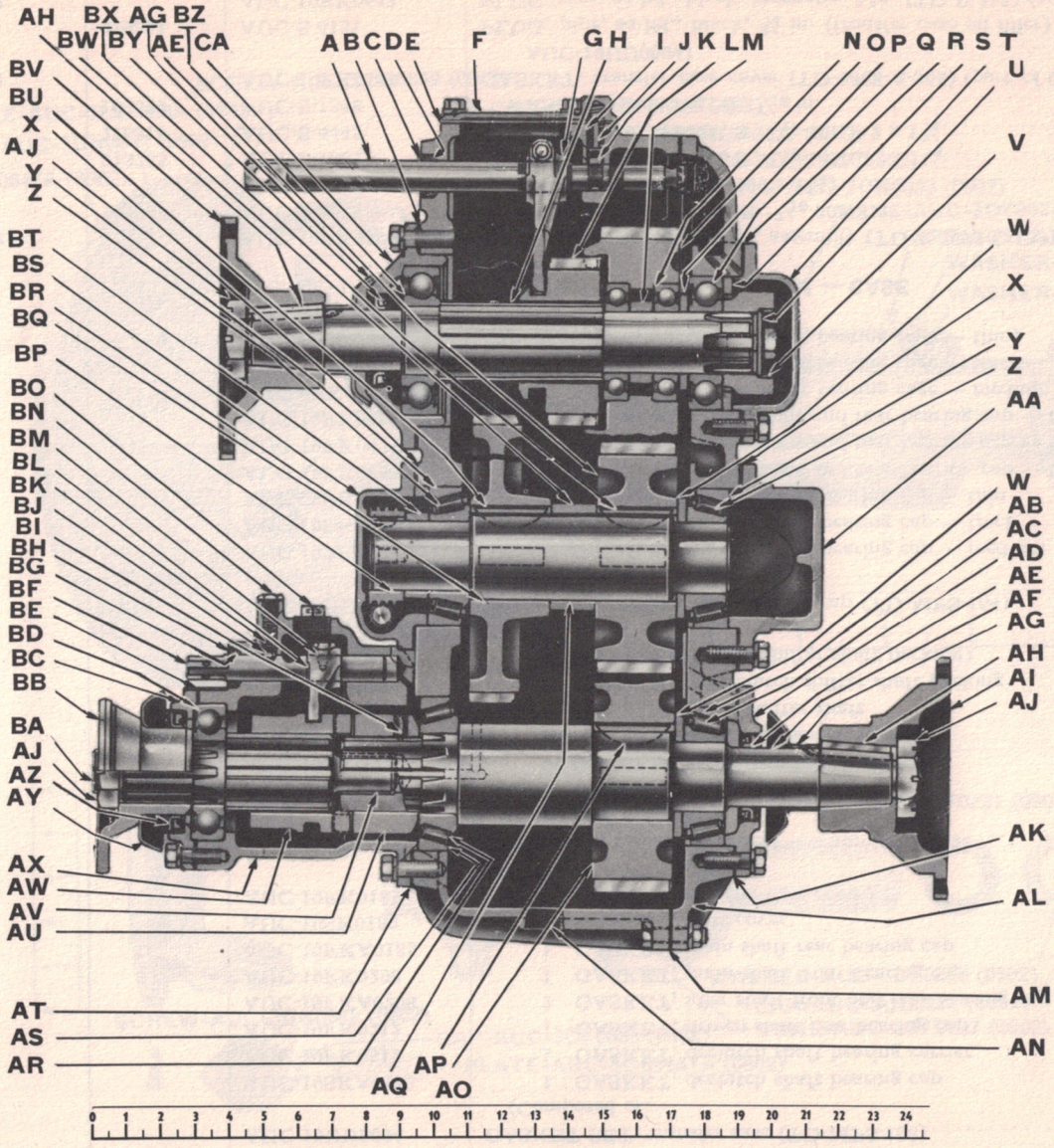

FIGURE 08-1 TRANSMISSION TRANSFER ASSEMBLY — SECTIONALIZED VIEW RA PD 346209

FIGURE 08-1 TRANSMISSION TRANSFER ASSEMBLY—SECTIONALIZED VIEW {RA PD 346209 A / RA PD 346210 A

KEY	ITEM	PART NO.	GROUP
A	SHAFT, shifting	AUC-19FK0191	0805
B	GASKET, main shaft bearing cage	AUC-19FK0208	0802
	SHIM, main shaft bearing cage	AUC-4FK0766	0802
C	RETAINER, packing	AUC-19UG0625	0805
D	PACKING, gear shift shaft	AUC-19UG0623	0805
E	GASKET, gear shift shaft cover	AUC-19SK0189	0805
F	COVER, gear shift shaft	AUC-19FK0188	0805
G	FORK, gear shift	AUC-19FK0205	0805A
H	SHAFT, main	AUC-19FK0206	0802
I	SPRING, gear shift lock	AUC-19SKB0438	0805
J	PLUNGER, gear shift lock spring	AUC-19SKB0463	0805
K	BALL, gear shift lock	AUC-S-1671	0805
L	GEAR, low speed sliding	AUC-19FK0225	0802
M	SPACER, drive gear idler bearing	AUC-19FK0221	0802
N	BEARING, main drive gear idler	AUC-19FK0421	0802
O	GEAR, main drive	AUC-19FK0356	0802
P	WASHER, drive gear idler bearing	AUC-19FK0223	0802
Q	BEARING, main shaft, rear	AUC-19FK0362	0802
R	GASKET, main shaft bearing cover	AUC-19FKA0185	0802
S	WASHER, main shaft rear bearing	AUC-19FKA0221	0802
T	CAP, main shaft rear bearing	AUC-19FK0211	0802
U	WASHER, plain, driving clutch	AUC-19FK0513	0802
V	CLUTCH, driving, power take-off	AUC-19FK0434	0802
W	WASHER, driven and idler shaft	AUC-19FKA0223	0803—0804
X	GASKET, idler shaft bearing cap	AUC-19FKA0208	0804
	SHIM, idler shaft bearing cap	AUC-19FK0468	0804
Y	CUP, bearing, idler shaft	AUC-19FK0637	0804
Z	CONE, bearing, idler shaft	AUC-19FK0636	0804
AA	CAP, idler shaft rear bearing	AUC-19FK0216	0804
AB	CUP, bearing, driven shaft, rear	AUC-19FK0637	0803
AC	CONE, bearing, driven shaft, rear	AUC-19FK0636	0803
AD	CAP, driven shaft rear bearing	AUC-19FK0487	0803
AE	OIL SEAL, main and driven shaft bearing	AUC-19SKB0214	0802—0803
AF	SHAFT, driven	AUC-19FK0218	0803
AG	DEFLECTOR, dirt, main and driven shaft	AUC-19FK0647	0802—0803
AH	KEY, main and driven shaft flange	AUC-4NFG01344	0802—0803
AI	FLANGE, driven shaft	AUC-3ES3201	0803—0800
AJ	NUT, flange	AUC-4FD0652	0800—0802—0803
AK	GASKET, driven shaft bearing cap	AUC-19FK0212	0803
	SHIM, driven shaft rear bearing cap	AUC-19FKA0581	0803
AL	CASE, w/COVER, assembly	AUC-19FK0590	0801
AM	GASKET, transfer case cover	AUC-19FK0185	0801

FIGURE 08-1 TRANSMISSION TRANSFER ASSEMBLY—SECTIONALIZED VIEW {RA PD 346209 B / RA PD 346210 B

KEY	ITEM	PART NO.	GROUP
AN	PLUG, pipe, oil drain	AUC-19FK0643	0801
AO	GEAR, driven	AUC-19FKA0358	0803
AP	KEY, driven gear	AUC-19FK0644	0803
AQ	SHAFT, idler	AUC-19FK0215	0804
AR	CONE, bearing, driven shaft, front	AUC-19FK0442	0803
AS	CUP, bearing, driven shaft, front	AUC-4UF1826	0803
AT	GASKET, declutch shaft bearing carrier	AUC-19FK0512	0804A
AU	CLUTCH, driving	AUC-19SKA0434	0804A
AV	BUSHING, driven shaft	AUC-19SKA0422	0803
AW	CLUTCH, sliding	AUC-19SKA0435	0804A
AX	CARRIER, declutch shaft bearing	AUC-19FK0432	0804A
AY	DEFLECTOR, dirt, declutch shaft flange	AUC-19FKA0647	0800
AZ	OIL SEAL, declutch shaft	AUC-19FK0431	0804A
BA	SHAFT, declutch	AUC-19SKA0427	0804A
BB	FLANGE, declutch shaft	AUC-3DM3021	0800
BC	CAP, declutch shaft bearing	AUC-19FKA0432	0804A
BD	BEARING, ball, declutch shaft	AUC-19FK0362	0804A
BE	GASKET, declutch shaft bearing cap	AUC-19SKA0433	0804A
BF	SHAFT, shifting, declutch	AUC-19FK0437	0805
BG	PACKING, declutch shifter shaft	AUC-19UG0624	0805
BH	RETAINER, shifter shaft packing	AUC-19UG0626	0805
BI	SCREW, lock, declutch driving clutch	AUC-19FK0645	0804A
BJ	BALL, declutch shifting lock	AUC-S-1670	0805
BK	SPRING, declutch shift lock	AUC-19SKA0438	0805
BL	FORK, declutch shaft	AUC-19FK0436	0805A
BM	SCREW, declutch shift fork	AUC-19FK0646	0805A
BN	SCREW, declutch shift lock spring	AUC-19UG0622	0805
BO	PLUG, declutch shaft bearing carrier oil filler	AUC-19FK0426	0804A
BP	GEAR, drive, speedometer	AUC-16S0569	0810
BQ	GEAR, low speed, idler shaft	AUC-19FK0358	0804
BR	KEY, speedometer drive gear	AUC-S-2303	0810
BS	CAP, idler shaft front bearing	AUC-19FK0131	0804
BT	SPACER, speedometer drive gear	AUC-16UU0568A	0810
BU	KEY, idler shaft low speed gear	AUC-19FK0644	0804
BV	FLANGE, main shaft	AUC-3ET3201	0802
BW	SPACER, idler gear	AUC-19FK0222	0804
BX	KEY, idler shaft gear	AUC-19FK0644	0804
BY	GEAR, idler shaft	AUC-19FKA0225	0804
BZ	BEARING, ball, main shaft, front	AUC-19FK0361	0802
CA	CAGE, main shaft front bearing	AUC-19FK0207	0802

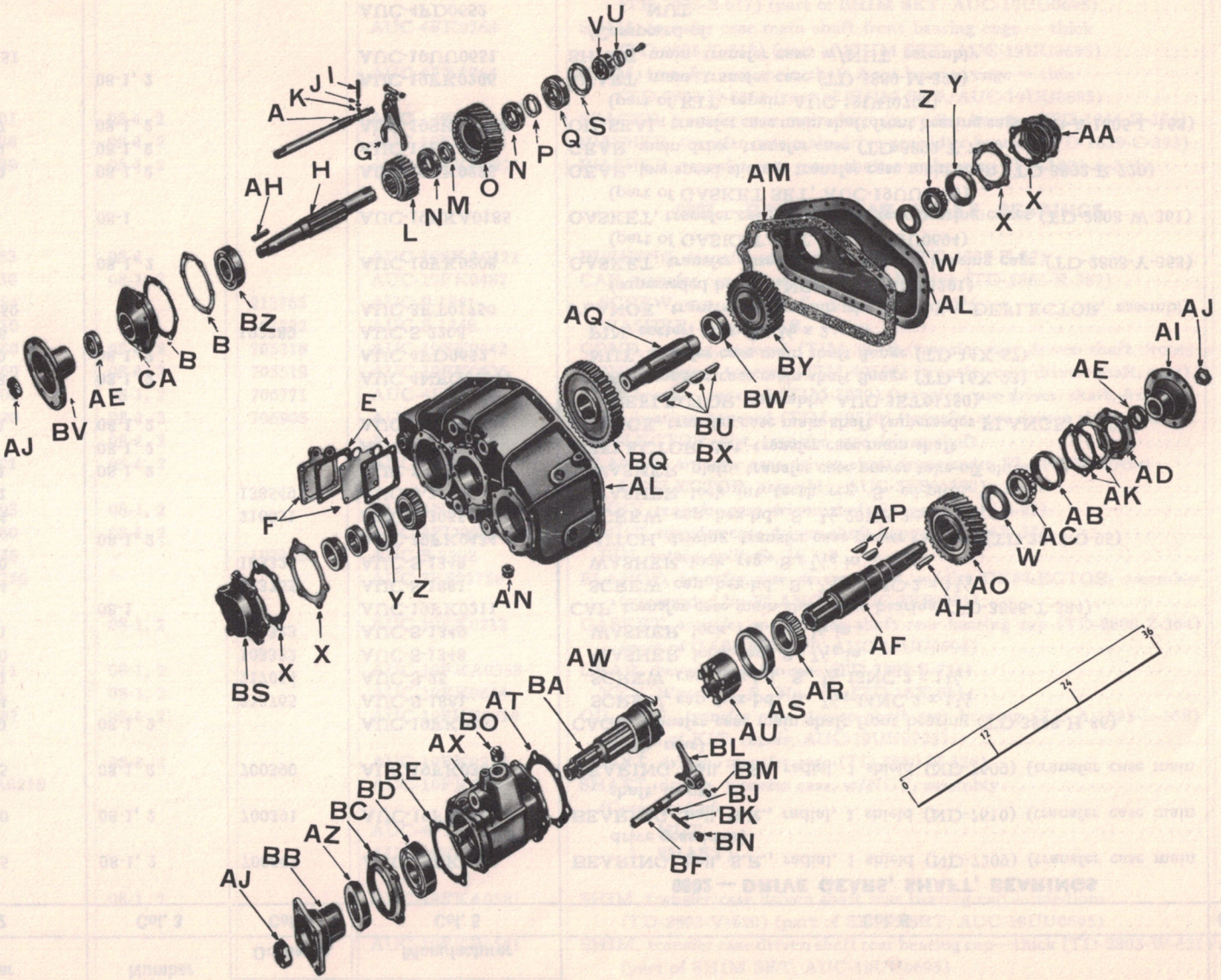

FIGURE 08-2 TRANSMISSION TRANSFER — EXPLODED VIEW RA PD 346210

Note Symbol	Official Stock Number	Figure Number	Part Number		ITEM	Quan. Reqd. per Unit Assy.	Unit Price
			Ordnance	Manufacturer			
Col. 1	Col. 2	Col. 3	Col. 4	Col. 5	Col. 6	Col. 7	Col. 8
					0802 — DRIVE GEARS, SHAFT, BEARINGS		
H-12	H012-1310045	08-1, 2	700602	AUC-19FK0421	BEARING, ball, S.R., radial, 1 shield (ND-7209) (transfer case main drive gear idler)	2	
H-12	H012-1314050	08-1, 2	700391	AUC-19FK0361	BEARING, ball, S.R., radial, 1 shield (ND-7610) (transfer case main shaft, front)	1	
H-12	H012-1314045	08-1, 2	700390	AUC-19FK0362	BEARING, ball, S.R., radial, 1 shield (ND-7609) (transfer case main shaft, rear)	1	
	G509-0131529	08-1, 2		AUC-19FK0207	CAGE, transfer case main shaft front bearing (TD-3838-H-86)	1	
H-1	H001-1013054		213765	AUC-S-1881	SCREW, cap, hex-hd., S., 7/16-14NC-2 x 1 1/4	5	
H-1	H001-1013071		217054	AUC-S-25	SCREW, cap, hex-hd., S., 1/2-13NC-2 x 1 1/4	1	
H-1	H001-1518010		103322	AUC-S-1348	WASHER, lock, reg., S., 7/16 in.	5	
H-1	H001-1518011		103323	AUC-S-1349	WASHER, lock, reg., S., 1/2 in.	1	
		08-1		AUC-19FK0211	CAP, transfer case main shaft rear bearing (TD-3866-T-384)	1	
H-1	H001-1013054		213765	AUC-S-1881	SCREW, cap, hex-hd., S., 7/16-14NC-2 x 1 1/4	6	
H-1	H001-1518010		103322	AUC-S-1348	WASHER, lock, reg., S., 7/16 in.	6	
		08-1, 2		AUC-19FK0434	CLUTCH, driving, transfer case power take-off (TD-2848-Q-95)	1	
H-1	H001-1013284		216031	AUC-S-2055	SCREW, cap, hex-hd., S., 1/2-20NF-2 x 1 1/4	1	
H-1	H001-7021861		138549	AUC-S-3295C	WASHER, lock, int. teeth, reg., S., cd-pltd., 1/2 in.	1	
	G509-0443041	08-1, 2		AUC-19FK0513	WASHER, plain, transfer case power take-off clutch	1	
		08-1, 2		AUC-19FK0647	DEFLECTOR, dirt, transfer case main shaft	1	
	G150-0184601	08-1, 2		AUC-3ET3201	FLANGE, transfer case main shaft (supersedes FLANGE, w/dirt DEFLECTOR, assembly, AUC-3ET01750)	1	
	G509-0258893	08-1, 2		AUC-4NFG01344	KEY, transfer case main shaft flange (TD-16X-23)	1	
	G116-2314760	08-1, 2		AUC-4FD0652	NUT, transfer case main shaft flange (TD-14X-57)	1	
H-1	H001-0811056		103389	AUC-S-2208	PIN, cotter, split, S., 1/8 x 2	1	
	0600-3ET01750			AUC-3ET01750	FLANGE, transfer case main shaft, w/dirt DEFLECTOR, assembly (superseded by FLANGE, AUC-3ET3201)	1	
		08-1, 2		AUC-19FK0208	GASKET, transfer case main shaft front bearing cage (TD-2808-Y-363) (part of GASKET SET, AUC-19UU0694)	2	
		08-1		AUC-19FKA0185	GASKET, transfer case main shaft rear bearing cover (TD-2808-W-361) (part of GASKET SET, AUC-19UU0694)	1	
	G509-0194810	08-1, 2		AUC-19FK0225	GEAR, low speed sliding, transfer case main shaft (TD-3892-R-720)	1	
	G509-0194809	08-1, 2		AUC-19FK0356	GEAR, main drive, transfer case (TD-3892-T-722)	1	
H-13	H013-0500087	08-1, 2		AUC-19SKB0214	OIL SEAL, transfer case main shaft front bearing cage (TD-A-1805-L-168) (part of KIT, repair, AUC-19UU0705)	1	
		08-1, 2		AUC-19FK0206	SHAFT, main, transfer case (TD-3880-M-325)	1	
	0600-19UU0651			AUC-19UU0651	SHAFT, main, transfer case, w/NUT, assembly	1	
					(Composed of:		
				AUC-4FD0652	1 NUT		
				AUC-19FK0206	1 SHAFT)		

		08-1, 2		AUC-4FK0766	SHIM, transfer case main shaft front bearing cage — medium (TD-2803-S-617) (part of SHIM SET, AUC-19UU0695)	2
				AUC-4FK0768	SHIM, transfer case main shaft front bearing cage — thick (TD-2803-T-618) (part of SHIM SET, AUC-19UU0695)	3
				AUC-4FK0764	SHIM, transfer case main shaft front bearing cage — thin (TD-2803-R-616) (part of SHIM SET, AUC-19UU0695)	1
	G509-0387001	08-1, 2		AUC-19FK0221	SPACER, transfer case main drive gear idler bearing (TD-1844-R-174)	1
	G509-0443038	08-1, 2		AUC-19FK0223	WASHER, transfer case main drive gear idler bearing (TD-1829-C-393)	1
	G509-0443039	08-1, 2		AUC-19FKA0221	WASHER, transfer case main shaft rear bearing (TD-1829-A-391)	1
					0803 — DRIVEN GEAR, SHAFT, BEARINGS	
	G116-1528033	08-1		AUC-19SKA0422	BUSHING, transfer case driven shaft (TD-1825-E-57)	1
	G509-0131530	08-1, 2		AUC-19FK0487	CAP, transfer case driven shaft rear bearing (TD-3866-R-382)	1
H-1	H001-1013054		213765	AUC-S-1881	SCREW, cap, hex-hd., S., 7/16-14NC-2 x 1 1/4	6
H-1	H001-1518010		103322	AUC-S-1348	WASHER, lock, reg., S., 7/16 in.	6
H-12	H012-6127480	08-1, 2	705318	AUC-19FK0442	CONE, bearing, tapered (TIM-3979) (transfer case driven shaft, front)	1
H-12	H012-6176460	08-1, 2	705519	AUC-19FK0636	CONE, bearing, tapered (TIM-49585) (transfer case driven shaft, rear)	1
H-12	H012-6211600	08-1, 2	706771	AUC-4UF1826	CUP, bearing, tapered (TIM-3920) (transfer case driven shaft, front)	1
H-12	H012-6231220	08-1, 2	706905	AUC-19FK0637	CUP, bearing, tapered (TIM-49520) (transfer case driven shaft, rear)	1
		08-1, 2		AUC-19FK0647	DEFLECTOR, dirt, transfer case driven shaft	1
	0600-3ES3201	08-1, 2		AUC-3ES3201	FLANGE, transfer case driven shaft (supersedes FLANGE, w/dirt DEFLECTOR, assembly, AUC-3ES01750)	1
	G509-0258893	08-1, 2		AUC-4NFG01344	KEY, transfer case driven shaft flange (TD-16X-23)	1
	G116-2314760	08-1, 2		AUC-4FD0652	NUT, transfer case driven shaft flange (TD-14X-57)	1
H-1	H001-0811056		103389	AUC-S-2208	PIN, cotter, split, S., 1/8 x 2	1
	0600-3ES01750			AUC-3ES01750	FLANGE, transfer case driven shaft, w/dirt DEFLECTOR, assembly (superseded by FLANGE, AUC-3ES3201)	1
		08-1, 2		AUC-19FK0212	GASKET, transfer case driven shaft rear bearing cap (TD-2808-Z-364) (part of GASKET SET, AUC-19UU0694)	1
	G509-0194811	08-1, 2		AUC-19FKA0358	GEAR, driven, transfer case (TD-3892-S-721)	1
	8500-16X-65	08-1, 2		AUC-19FK0644	KEY, Woodruff, S., No. VX (TD-16X-65)	2
H-13	H013-0500087	08-1 ,2		AUC-19SKB0214	OIL SEAL, transfer case driven shaft rear bearing (TD-A-1805-L-168) (part of KIT, repair, AUC-19UU0705)	1
		08-1, 2		AUC-19FK0218	SHAFT, driven, transfer case (TD-3880-N-326)	1
	0600-19FKA0218			AUC-19FKA0218	SHAFT, driven, transfer case, w/NUT, assembly	1
					(Composed of:	
				AUC-4FD0652	1 NUT	
				AUC-19FK0218	1 SHAFT)	
		08-1, 2		AUC-19FKA0581	SHIM, transfer case driven shaft rear bearing cap — medium (TD-2803-V-620) (part of SHIM SET, AUC-19UU0695)	3
				AUC-19FKB0581	SHIM, transfer case driven shaft rear bearing cap—thick (TD-2803-W-621) (part of SHIM SET, AUC-19UU0695)	3
				AUC-19FK0581	SHIM, transfer case driven shaft rear bearing cap — thin (TD-2803-U-619) (part of SHIM SET, AUC-19UU0695)	1
	G509-0443040	08-1, 2		AUC-19FKA0223	WASHER, transfer case driven shaft (TD-1829-B-392)	1

Note Symbol	Official Stock Number	Figure Number	Part Number		ITEM	Quan. Reqd. per Unit Assy.	Unit Price
			Ordnance	Manufacturer			
Col. 1	Col. 2	Col. 3	Col. 4	Col. 5	Col. 6	Col. 7	Col. 8
					0804 — IDLER GEAR, SHAFT, BEARINGS		
		08-1		AUC-19FK0131	CAP, transfer case idler shaft front bearing (TD-3866-S-383)	1	
				AUC-19A0699	SCREW, cap, hex-hd., S., 7/16-14NC-2 x 1 1/8	4	
				AUC-19A0701	SCREW, cap, hex-hd., S., 7/16-14NC-2 x 2 3/8	2	
H-1	H001-1518010		103322	AUC-S-1348	WASHER, lock, reg., S., 7/16 in.	6	
	G509-0131532	08-1, 2		AUC-19FK0216	CAP, transfer case idler shaft rear bearing (TD-3866-Q-381)	1	
				AUC-19A0699	SCREW, cap, hex-hd., S., 7/16-14NC-2 x 1 1/8	6	
H-1	H001-1518010		103322	AUC-S-1348	WASHER, lock, reg., S., 7/16 in.	6	
H-12	H012-6176460	08-1, 2	705519	AUC-19FK0636	CONE, bearing, tapered (TIM-49585) (transfer case idler shaft)	2	
H-12	H012-6231220	08-1, 2	706905	AUC-19FK0637	CUP, bearing, tapered (TIM-49520) (transfer case idler shaft)	2	
		08-1, 2		AUC-19FKA0208	GASKET, transfer case idler shaft bearing cap, front and rear (TD-2808-X-362) (part of GASKET SET, AUC-19UU0694)	2	
	G509-0194813	08-1, 2		AUC-19FK0358	GEAR, low speed, transfer case idler shaft (TD-3892-Q-719)	1	
	8500-16X-65	08-1, 2		AUC-19FK0644	KEY, Woodruff, S., No. VX (TD-16X-65)	2	
	G509-0194812	08-1, 2		AUC-19FKA0225	GEAR, transfer case idler shaft (TD-3892-U-723)	1	
	8500-16X-65	08-1, 2		AUC-19FK0644	KEY, Woodruff, S., No. VX (TD-16X-65)	2	
	G509-0383754	08-1, 2		AUC-19FK0215	SHAFT, idler, transfer case (TD-3880-L-324)	1	
				AUC-19FK0469	SHIM, transfer case idler shaft front and rear bearing cap — medium (TD-2803-P-614) (part of SHIM SET, AUC-19UU0695)	4	
				AUC-19FK0471	SHIM, transfer case idler shaft front and rear bearing cap — thick (TD-2803-Q-615) (part of SHIM SET, AUC-19UU0695)	6	
		08-1, 2		AUC-19FK0468	SHIM, transfer case idler shaft front and rear bearing cap — thin (TD-2803-N-612) (superseded by SHIM, AUC-19FKB0468)	2	
				AUC-19FKB0468	SHIM, transfer case idler shaft front and rear bearing cap — thin (TD-2803-N-612) (part of SHIM SET, AUC-19UU0695) (supersedes SHIM, AUC-19FK0468)	2	
		08-1, 2		AUC-19FK0222	SPACER, transfer case idler gear (TD-1844-S-175)	1	
	G509-0443040	08-1, 2		AUC-19FKA0223	WASHER, transfer case idler shaft (TD-1829-B-392)	1	
					0804A — DECLUTCH SHAFT, BEARINGS AND PARTS		
H-12	H012-1311045		700625	AUC-3FK0285	BEARING, ball, S.R., radial, 1 shield (ND-7309) (transfer case declutch shaft) (superseded by BEARING, AUC-19FK0362)	1	
H-12	H012-1314045	08-1, 2	700390	AUC-19FK0362	BEARING, ball, S.R., radial, 1 shield (ND-7609) (transfer case declutch shaft) (supersedes BEARING, AUC-3FK0285)	1	
	G509-0131588	08-1, 2		AUC-19FKA0432	CAP, transfer case declutch shaft bearing (TD-3866-P-354)	1	
H-1	H001-1013033		213733	AUC-S-64	SCREW, cap, hex-hd., S., 3/8-16NC-2 x 1 1/4	4	
H-1	H001-1518009		103321	AUC-S-1347	WASHER, lock, reg., S., 3/8 in.	4	

	G509-0131704	08-1, 2		AUC-19FK0432	CARRIER, transfer case declutch shaft bearing (TD-3826-C-185)	1
H-1	H001-1013054		213765	AUC-S-1881	SCREW, cap, hex-hd., S., 7/16-14NC-2 x 1 1/4	6
H-1	H001-1518010		103322	AUC-S-1348	WASHER, lock, reg., S., 7/16 in.	6
	G063-0100550	08-1, 2		AUC-19SKA0434	CLUTCH, driving, transfer case declutch (TD-2848-W-23)	1
	G116-0300720	08-1, 2		AUC-19SKA0435	CLUTCH, sliding, transfer case declutch (TD-2848-V-22)	1
		08-1, 2		AUC-19SKA0433	GASKET, transfer case declutch shaft bearing cap (TD-2808-P-94) (part of GASKET SET, AUC-19UU0694)	1
		08-1, 2		AUC-19FK0512	GASKET, transfer case declutch shaft bearing carrier (TD-2808-V-360) (part of GASKET SET, AUC-19UU0694)	1
H-13	H013-0500157	08-1, 2		AUC-19FK0431	OIL SEAL, transfer case declutch shaft (TD-A-1805-Z-104) (part of KIT, repair, AUC-19UU0705)	1
	G160-0340680	08-1, 2		AUC-19FK0426	PLUG, transfer case declutch shaft bearing carrier oil filler (TD-1850-Q-43)	1
	8500-S-865	08-1		AUC-19FK0645	SCREW, lock, transfer case declutch driving clutch (TD-S-865)	1
		08-1, 2		AUC-19SKA0427	SHAFT, declutch, transfer case (TD-3880-T-46)	1
	0600-19UU0652			AUC-19UU0652	SHAFT, declutch, transfer case, w/NUT, assembly	1
					(Composed of:	
				AUC-4FD0652	1 NUT	
				AUC-19SKA0427	1 SHAFT)	
					0805 — SHIFTER SHAFTS	
H-2	H002-0100140	08-1, 2	104920	AUC-S-1670	BALL, S., 3/8 in. diam. (transfer case declutch shifting lock)	1
H-2	H002-0100160	08-1, 2	104921	AUC-S-1671	BALL, S., 7/16 in. diam. (transfer case gear shift lock)	1
		08-1, 2		AUC-19FK0188	COVER, transfer case gear shift shaft (TD-3855-H-60)	1
H-1	H001-1013030		193999	AUC-S-12	SCREW, cap, hex-hd., S., 3/8-16NC-2 x 3/4	4
H-1	H001-1518009		103321	AUC-S-1347	WASHER, lock, reg., S., 3/8 in.	4
	G067-2300280	08-1, 2		AUC-19SK0189	GASKET, transfer case gear shift shaft cover (TD-2808-H-216) (part of GASKET SET, AUC-19UU0694)	2
	G116-1733649	08-1		AUC-19UG0624	PACKING, transfer case declutch shifter shaft (TD-5X-349) (part of KIT, repair, AUC-19UU0705)	1
	G116-1733650	08-1		AUC-19UG0623	PACKING, transfer case gear shift shaft (TD-5X-287) (part of KIT, repair, AUC-19UU0705)	1
				AUC-19UG0628	PLATE, breather, transfer case gear shift shaft cover (TD-2803-N-612)	1
	G103-0400360	08-1, 2		AUC-19SKB0463	PLUNGER, transfer case gear shift lock spring (TD-1846-B-2)	1
	G116-0302540	08-1		AUC-19UG0626	RETAINER, transfer case declutch shifter shaft packing (TD-1805-W-75) (part of KIT, repair, AUC-19UU0705)	1
	G067-2300490	08-1		AUC-19UG0625	RETAINER, transfer case gear shift shaft packing (TD-1805-Z-26) (part of KIT, repair, AUC-19UU0705)	1
	G160-0382032	08-1, 2		AUC-19UG0622	SCREW, transfer case declutch shift lock spring (TD-3X-146)	1
	G116-1784618	08-1, 2		AUC-19FK0437	SHAFT, shifting, transfer case declutch (TD-2843-F-110)	1
	G509-0383755	08-1, 2		AUC-19FK0191	SHAFT, shifting, transfer case gear (TD-2843-R-122)	1
	G116-1789832	08-1, 2		AUC-19SKA0438	SPRING, transfer case declutch shift lock (TD-2858-S-45)	1
	G067-2300720	08-1, 2		AUC-19SKB0438	SPRING, transfer case gear shift lock (TD-2858-A-1)	1

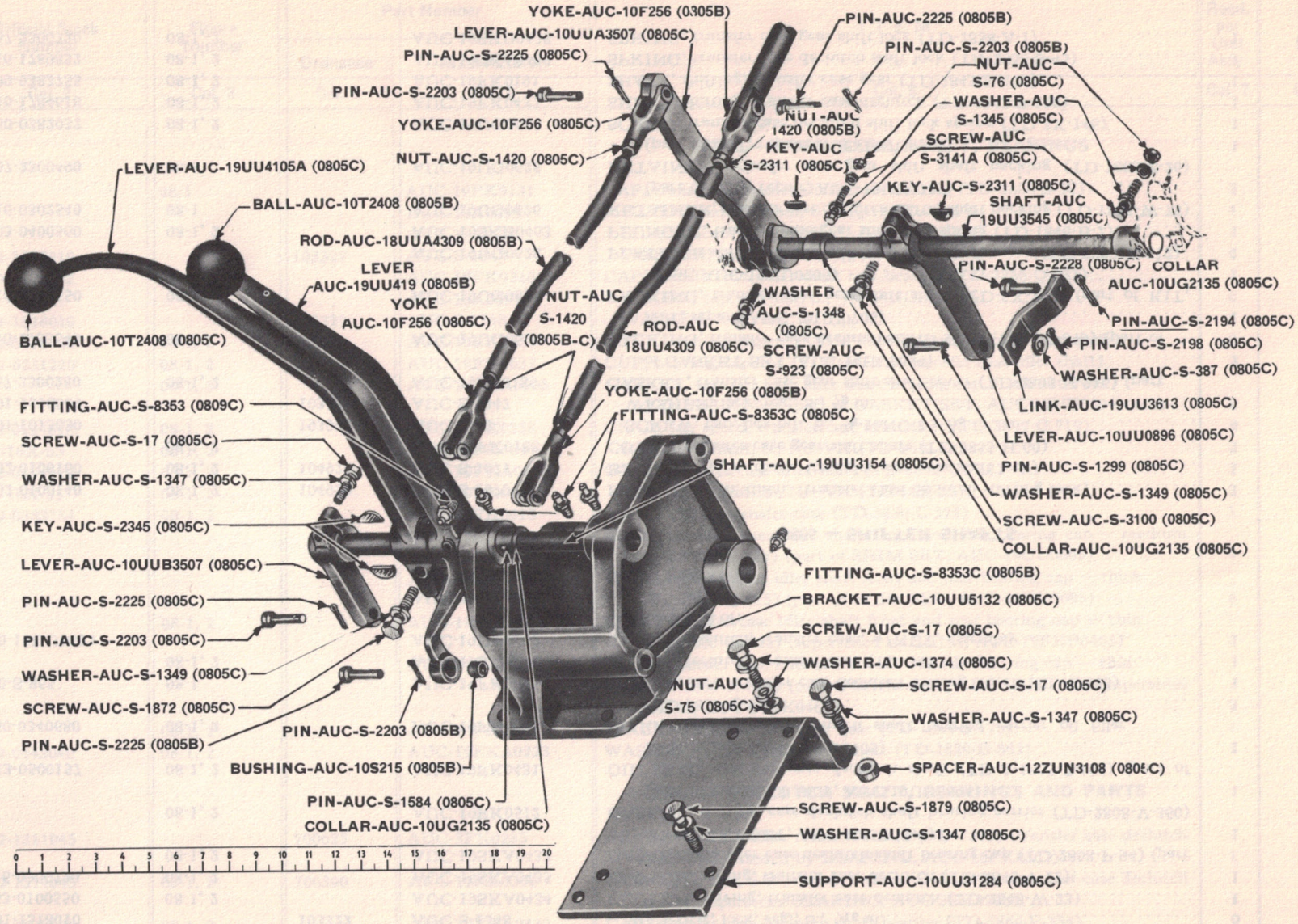

FIGURE 08-3 TRANSMISSION TRANSFER CONTROLS RA PD 346211

Note Symbol	Official Stock Number	Figure Number	Part Number		ITEM	Quan. Reqd. per Unit Assy.	Unit Price
			Ordnance	Manufacturer			
Col. 1	Col. 2	Col. 3	Col. 4	Col. 5	Col. 6	Col. 7	Col. 8
					0805A — YOKES		
	G116-0301440	08-1, 2		AUC-19FK0436	FORK, transfer case declutch shift (TD-2849-P-94)	1	
	G160-0382031	08-1, 2		AUC-19FK0646	SCREW, transfer case declutch shift fork (TD-26X-52)	1	
	G509-0185450	08-1, 2		AUC-19FK0205	FORK, transfer case gear shift (TD-2849-R-96)	1	
H-1	H001-0713024		103045	AUC-S-809	NUT, castle, S., 3/8-24NF-2	1	
H-1	H001-0811040		103374	AUC-S-2199	PIN, cotter, split, S., 3/32 x 1	1	
H-1	H001-1013248		216794	AUC-S-1457	SCREW, cap, hex-hd., S., 3/8-16NF-2 x 1 3/4	1	
					0805B — SHIFT LEVERS		
		08-3		AUC-10T2408	BALL, transfer case gear shift hand lever	1	
		08-3		AUC-10S215	BUSHING, transfer case gear shift hand lever	1	
H-2	H002-0504208	08-3	504208	AUC-S-8353C	FITTING, lubricating, push type, stght., 1/8-27NPT, male, short, (transfer case gear shift hand lever)	1	
		08-3		AUC-19UU419	LEVER, hand, transfer case gear shift	1	
				AUC-19UU0130	LEVER, hand, transfer case gear shift, w/BUSHING, assembly (Composed of:	1	
				AUC-10S215	1 BUSHING		
				AUC-19UU419	1 LEVER)		
		08-3		AUC-18UUA4309	ROD, control, transfer case gear shift, assembly	1	
H-1	H001-1810060	08-3	104039	AUC-10F256	YOKE, rod end, adjustable, light, S., 1/2 in. (transfer case gear shift control rod)	2	
H-1	H001-0718025	08-3	218571	AUC-S-1420	NUT, reg., hex., s-fin., S., 1/2-20NF-2	2	
H-1	H001-0811050	08-3	103384	AUC-S-2203	PIN, cotter, split, S., 1/8 x 3/4	2	
H-1	H001-0823006	08-3	114787	AUC-S-2225	PIN, rod end, S., 1/2 in. diam. x 1 15/32 in. long	2	
					0805C — DECLUTCH LEVER AND PARTS		
		08-3		AUC-10T2408	BALL, transfer case declutch shift hand lever	1	
		08-3		AUC-10UU5132	BRACKET, control, transfer case	1	
H-1	H001-0718003	08-3	220066	AUC-S-75	NUT, reg., hex., s-fin., S., 3/8-16NC-2	2	
H-1	H001-1013034	08-3	213737	AUC-S-17	SCREW, cap, hex-hd., S., 3/8-16NC-2 x 1 1/2	2	
H-1	H001-1013072	08-3	217055	AUC-S-1872	SCREW, cap, hex-hd., S., 1/2-13NC-2 x 1 1/2	2	
H-1	H001-1518009	08-3	103321	AUC-S-1347	WASHER, lock, reg., S., 3/8 in.	4	
H-1	H001-1518011	08-3	103323	AUC-S-1349	WASHER, lock, reg., S., 1/2 in.	2	
				AUC-10S215	BUSHING, transfer case declutch shift cross shaft lever	1	

Note Symbol	Official Stock Number	Figure Number	Part Number		ITEM	Quan. Reqd. per Unit Assy.	Unit Price
			Ordnance	Manufacturer			
Col. 1	Col. 2	Col. 3	Col. 4	Col. 5	Col. 6	Col. 7	Col. 8
					0805C — DECLUTCH LEVER AND PARTS — Continued		
		08-3		AUC-10UG2135	COLLAR, transfer case control shaft	2	
H-1	H001-0718001	08-3	220064	AUC-S-76	NUT, reg., hex., s-fin., S., 1/4-20NC-2	2	
H-1	H001-1030143	08-3	113965	AUC-S-3141A	SCREW, machine, rd-hd., S., 1/4-20NC-2 x 2	2	
H-1	H001-1518007	08-3	103319	AUC-S-1345	WASHER, lock, reg., S., 1/4 in.	4	
		08-3		AUC-10UG2135	COLLAR, transfer case hand lever control shaft	1	
H-1	H001-0830094	08-3	110928	AUC-S-1584	PIN, straight, cold-fin., S., .25 x 1 5/8	1	
H-2	H002-0504202		504202	AUC-S-8352C	ELBOW, lubricating, 90°, 1/8-27NPT, male and female (transfer case control bracket)	1	
H-2	H002-0504208	08-3	504208	AUC-S-8353C	FITTING, lubricating, push type, stght., 1/8-27NPT, male, short (transfer case control bracket)	4	
		08-3		AUC-19UU4105A	LEVER, hand, transfer case declutch shift	1	
H-1	H001-0518033	08-3	112139	AUC-S-2345	KEY, Woodruff, S., 1/4 x 7/8 (No. 807)	1	
H-1	H001-1013072	08-3	217055	AUC-S-1872	SCREW, cap, hex-hd., S., 1/2-13NC-2 x 1 1/2	1	
H-1	H001-1518011	08-3	103323	AUC-S-1349	WASHER, lock, reg., S., 1/2 in.	1	
		08-3		AUC-10UUA3507	LEVER, transfer case declutch shift	1	
H-1	H001-0518023	08-3	103907	AUC-S-2311	KEY, Woodruff, S., 3/16 x 7/8 (No. 607)	1	
H-1	H001-1013055	08-3	213770	AUC-S-923	SCREW, cap, hex-hd., S., 7/16-14NC-2 x 1 1/2	1	
H-1	H001-1518010	08-3	103322	AUC-S-1348	WASHER, lock, reg., S., 7/16 in.	1	
		08-3		AUC-10UUB3507	LEVER, transfer case declutch shift control shaft	1	
H-1	H001-0518033	08-3	112139	AUC-S-2345	KEY, Woodruff, S., 1/4 x 7/8 (No. 807)	1	
H-1	H001-1013034	08-3	213737	AUC-S-17	SCREW, cap, hex-hd., S., 3/8-16NC-2 x 1 1/2	1	
H-1	H001-1518009	08-3	103321	AUC-S-1347	WASHER, lock, reg., S., 3/8 in.	1	
				AUC-10UU3507	LEVER, transfer case declutch shift cross shaft	1	
		08-3		AUC-10UU0896	LEVER, transfer case declutch shift cross shaft, w/BUSHING, assembly	1	
H-1	H001-0518023	08-3	103907	AUC-S-2311	KEY, Woodruff, S., 3/16 x 7/8 (No. 607)	1	
H-1	H001-1013073	08-3	217056	AUC-S-3100	SCREW, cap, hex-hd., S., 1/2-13NC-2 x 1 3/4	1	
H-1	H001-1518011	08-3	103323	AUC-S-1349	WASHER, lock, reg., S., 1/2 in.	1	
		08-3		AUC-19UU3613	LINK, control, transfer case declutch shift	1	
H-1	H001-0811025	08-3	103361	AUC-S-2194	PIN, cotter, split, S., 1/16 x 1/2	1	
H-1	H001-0811039	08-3	103373	AUC-S-2198	PIN, cotter, split, S., 3/32 x 3/4	1	
H-1	H001-0823002	08-3	114783	AUC-S-2228	PIN, rod end, S., 1/4 in. diam. x 13/16 in. long	1	
H-1	H001-4541620	08-3	114785	AUC-S-1299	PIN, rod end, S., 3/8 in. diam. x 1 3/32 in. long	1	
		08-3		AUC-S-387	WASHER, plain, special, S., 3/8 in. (13/32 in. I.D. x 13/16 in. O.D. x 1/16 in. thick)	2	
		08-3		AUC-18UU4309	ROD, control, transfer case declutch shift, assembly	1	
		08-3		AUC-19UU3154	SHAFT, control, transfer case hand shift levers	1	
		08-3		AUC-19UU3545	SHAFT, cross, transfer case declutch control	1	
		08-3		AUC-12ZUN3108	SPACER, transfer case control bracket support	2	

		08-3		AUC-10UU31284	SUPPORT, transfer case control bracket	1
H-1	H001-1013035	08-3	217022	AUC-S-1879	SCREW, cap, hex-hd., S., 3/8-16NC-2 x 1 3/4	2
H-1	H001-1518009	08-3	103321	AUC-S-1347	WASHER, lock, reg., S., 3/8 in.	2
H-1	H001-1810060	08-3	104039	AUC-10F256	YOKE, rod end, adjustable, light, S., 1/2 in. (transfer case declutch shift control rod)	2
H-1	H001-0718025	08-3	218571	AUC-S-1420	NUT, reg., hex., s-fin., S., 1/2-20NF-2	2
H-1	H001-0811050	08-3	103384	AUC-S-2203	PIN, cotter, split, S., 1/8 x 3/4	2
H-1	H001-0823006	08-3	114787	AUC-S-2225	PIN, rod end, S., 1/2 in. diam. x 1 15/32 in. long	2

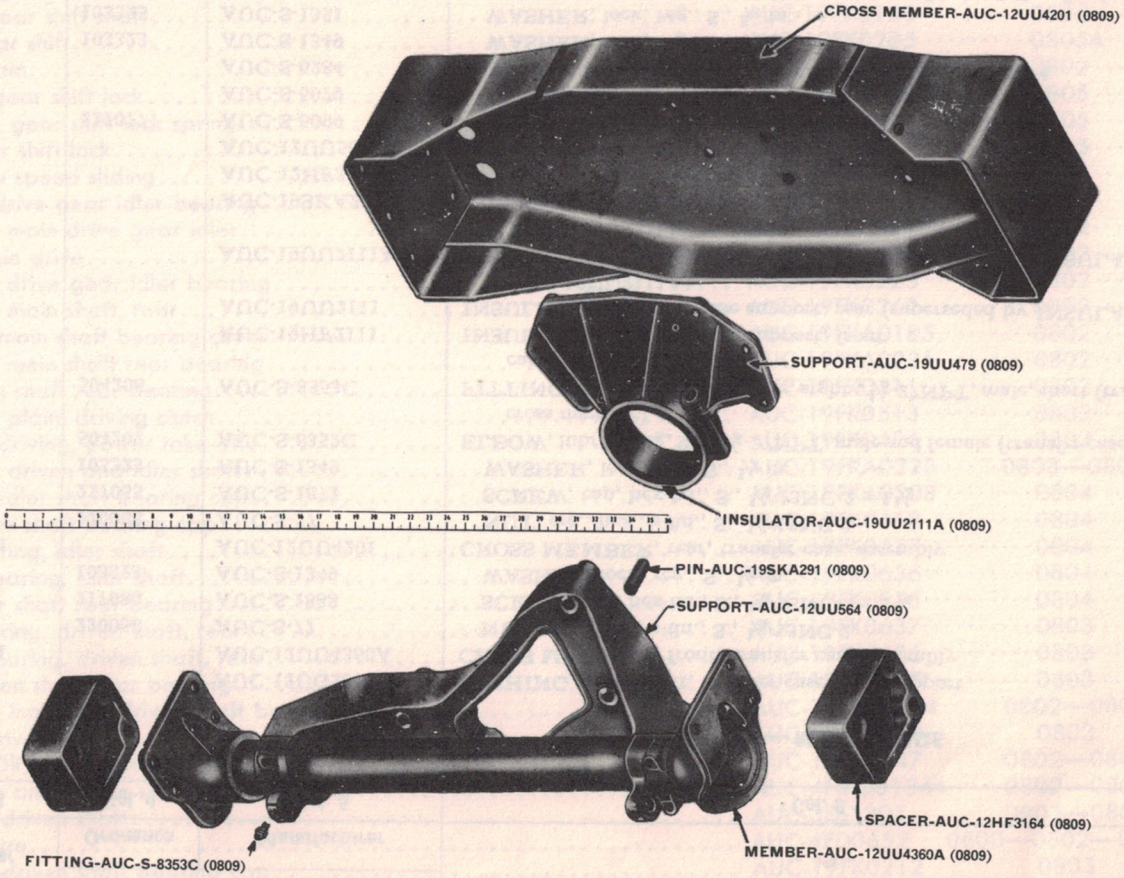

FIGURE 08-4 TRANSMISSION TRANSFER MOUNTINGS RA PD 346212

Note Symbol	Official Stock Number	Figure Number	Part Number		ITEM	Quan. Reqd. per Unit Assy.	Unit Price
			Ordnance	Manufacturer			
Col. 1	Col. 2	Col. 3	Col. 4	Col. 5	Col. 6	Col. 7	Col. 8
					0809 — MOUNTINGS		
				AUC-12UG237	BUSHING, cross shaft, transfer case front support	2	
		08-4, 15-1		AUC-12UU4360A	CROSS MEMBER, front, transfer case, assembly	1	
H-1	H001-0718005		220068	AUC-S-77	NUT, reg., hex., s-fin., S., ½-13NC-2	8	
H-1	H001-1013081		217080	AUC-S-1888	SCREW, cap, hex-hd., S., ½-13NC-2 x 3¾	8	
H-1	H001-1518011		103323	AUC-S-1349	WASHER, lock, reg., S., ½ in.	16	
		08-4, 15-1		AUC-12UU4201	CROSS MEMBER, rear, transfer case, assembly	1	
H-1	H001-0718005		220068	AUC-S-77	NUT, reg., hex., s-fin., S., ½-13NC-2	12	
H-1	H001-1013072		217055	AUC-S-1872	SCREW, cap, hex-hd., S., ½-13NC-2 x 1½	12	
H-1	H001-1518011		103323	AUC-S-1349	WASHER, lock, reg., S., ½ in.	24	
H-2	H002-0504202		504202	AUC-S-8352C	ELBOW, lubricating, 90°, ⅛-27NPT, male and female (transfer case front cross member)	2	
H-2	H002-0504208	08-4	504208	AUC-S-8353C	FITTING, lubricating, push type, stght., ⅛-27NPT, male, short (transfer case front cross member)	2	
	0600-19HF2111			AUC-19HF2111	INSULATOR, transfer case support, front	8	
	0600-19UU2111			AUC-19UU2111	INSULATOR, transfer case support, rear (superseded by INSULATOR, AUC-19UU2111A)	1	
	0600-19UU2111A	08-4		AUC-19UU2111A	INSULATOR, transfer case support, rear (supersedes INSULATOR, AUC-19UU2111)	1	
		08-4		AUC-19SKA291	PIN, dowel, transfer case	2	
		08-4		AUC-12HF3164	SPACER, end, transfer case front cross member	2	
		08-4		AUC-12UU564	SUPPORT, front, transfer case	1	
H-1	H001-1013078		217077	AUC-S-6099	SCREW, cap, hex-hd., S., dld. f/lkg-wire, ½-13NC-2 x 3	4	
				AUC-S-6079	SCREW, cap, hex-hd., S., dld. f/lkg-wire, ⅝-11NC-2 x 3	2	
				AUC-S-6284	SCREW, cap, hex-hd., S., dld. f/lkg-wire, ⅝-11NC-2 x 4	4	
H-1	H001-1518011		103323	AUC-S-1349	WASHER, lock, reg., S., ½ in.	4	
H-1	H001-1518013		103325	AUC-S-1351	WASHER, lock, reg., S., ⅝ in.	6	
				AUC-S-701	WASHER, plain, special, S., 21/32 in. I.D. x 1 5/16 in. O.D. x 3/32 in. thick	4	
		08-4		AUC-19UU479	SUPPORT, rear, transfer case	1	
H-1	H001-0718005		220068	AUC-S-77	NUT, reg., hex., s-fin., S., ½-13NC-2	7	
H-1	H001-1013073		217056	AUC-S-3100	SCREW, cap, hex-hd., S., ½-13NC-2 x 1¾	1	
H-1	H001-1014016		221638	AUC-S-1871	SCREW, cap, hex-hd., S., ½-13NC-2 x 2½	6	
H-1	H001-1518011		103323	AUC-S-1349	WASHER, lock, reg., S., ½ in.	14	
					0810 — SPEEDOMETER DRIVE GEARS		
	G067-2300040			AUC-16RE0572	BUSHING, speedometer driven gear (SW-T-11012)	1	
		08-1		AUC-16S0569	GEAR, drive, speedometer (SW-105946)	1	

H-1	H001-0518009	08-1	106749	AUC-S-2303	KEY, Woodruff, S., 1/8 x 1/2 (No. 404) (supersedes KEY, AUC-16UU03059)	1
				AUC-16S0571	GEAR, driven, speedometer (SW-105947)	1
	0600-16UU03056			AUC-16UU03056	GEAR SET, speedometer	1
					(Composed of:	
				AUC-16S0569	1 GEAR, drive	
				AUC-16S0571	1 GEAR, driven)	
	G116-0401100			AUC-16UU03059	KEY, speedometer drive gear (SW-3213) (superseded by KEY, AUC-S-2303)	1
	G067-2300710		A167650	AUC-3A0137B	SLEEVE, speedometer driven gear (SW-78744)	1
				AUC-19FK0219	SPACER, speedometer drive gear (TD-1484-T-176) (superseded by SPACER, AUC-16UU0568A)	1
		08-1		AUC-16UU0568A	SPACER, speedometer drive gear (TD-1844-T-176) (supersedes SPACER, AUC-19FK0219)	1

GROUP 09 — PROPELLER SHAFT AND UNIVERSAL JOINT

0901 — PROPELLER SHAFT ASSEMBLIES

	0600-3E9222			AUC-3E9222	BOLT, propeller shaft, front	8
	0600-3Y2222A			AUC-3Y2222A	BOLT, propeller shaft, intermediate and rear	24
				AUC-3B2222	BOLT, propeller shaft, rear (superseded by BOLT, AUC-3T9222)	8
				AUC-3T9222	BOLT, propeller shaft, rear (supersedes BOLT, AUC-3B2222)	8
H-1	H001-4167600		103026	AUC-S-1418	NUT, light, hex., s-fin., S., 3/8-24NF-2 (intermediate and rear propeller shafts)	32
H-1	H001-0718025		218571	AUC-S-1420	NUT, reg., hex., s-fin., S., 1/2-20NF-2 (front propeller shaft)	8
				AUC-30ZD5470J	SHAFT, propeller, front, assembly	1
				AUC-30LE4110	SHAFT, propeller, intermediate, assembly	1
				AUC-30ZDE5302	SHAFT, propeller, rear, assembly	1
H-1	H001-1518009		103321	AUC-S-1347	WASHER, lock, reg., S., 3/8 in. (intermediate and rear propeller shafts)	64
H-1	H001-1518011		103323	AUC-S-1349	WASHER, lock, reg., S., 1/2 in. (front propeller shaft)	16

0902 — UNIVERSAL JOINTS

FRONT PROPELLER SHAFT

				AUC-3RG0635A	BEARING, needle, front propeller shaft journal, assembly (SP-K4-6-68X) (part of KIT, repair, AUC-3UU01172)	8
	G122-0131430			AUC-3RG0218	CAP, dust, front propeller shaft slip joint (SP-3 1/2-14-19)	1
	G122-0131410			AUC-3RG0633	CAP, needle bearing, front propeller shaft (SP-K4-70-49) (part of KIT, repair, AUC-3UU01172)	8
				AUC-3RG0729	GASKET, front propeller shaft journal (SP-K4-86-119)	8
				AUC-3ZD0140D	JOINT, slip, front propeller shaft, assembly (SP-1501-14X)	1
	G122-0406340			AUC-3RG0632	JOURNAL, front propeller shaft, w/OIL SEAL, assembly (SP-K4-5-78X) (part of KIT, repair, AUC-3UU01172)	1

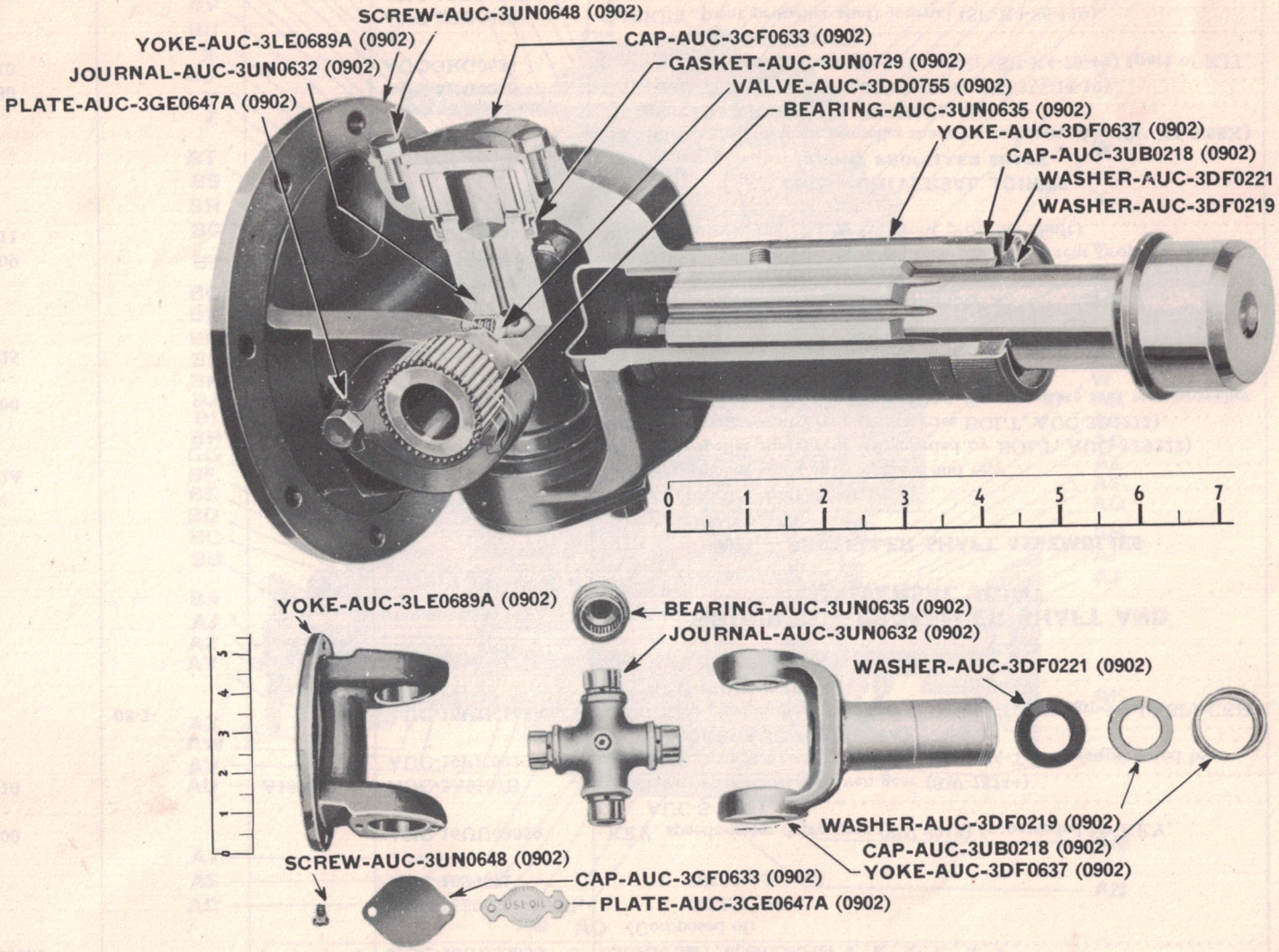

FIGURE 09-1 PROPELLER SHAFTS AND UNIVERSAL JOINTS RA PD 346213

Note Symbol	Official Stock Number	Figure Number	Part Number		ITEM	Quan. Reqd. per Unit Assy.	Unit Price
			Ordnance	Manufacturer			
Col. 1	Col. 2	Col. 3	Col. 4	Col. 5	Col. 6	Col. 7	Col. 8
					0902 — UNIVERSAL JOINTS — Continued		
					FRONT PROPELLER SHAFT		
	G122-0406350			AUC-3UU01172	KIT, repair, front propeller shaft (SP-K5-15X)	1	
					(Composed of:		
				AUC-4RG0635A	4 BEARING, assembly		
				AUC-3RG0633	4 CAP, bearing		
				AUC-3RG0632	1 JOURNAL, w/OIL SEAL, assembly		
				AUC-3RG0647	4 PLATE, lock		
				AUC-3GE0648	8 SCREW, bearing cap)		
	G122-0340315			AUC-3RG0647	PLATE, lock, front propeller shaft needle bearing cap (SP-98-781) (part of KIT, repair, AUC-3UU01172)	8	
				AUC-3RG0728	RETAINER, front propeller shaft journal gasket (SP-K4-76-17)	8	
	G122-0124356			AUC-3GE0648	SCREW, front propeller shaft needle bearing cap (SP-5-73-108) (part of KIT, repair, AUC-3UU01172)	16	
				AUC-30ZDA5470J	SHAFT, stub, front propeller shaft, assembly (SP-K4-60-224)	1	
	G104-0602501	09-1		AUC-3DD0755	VALVE, relief, front propeller shaft journal (SP-98-798)	1	
	G122-0442612			AUC-3RG0221	WASHER, felt, front propeller shaft slip joint (SP-K4-16-83)	1	
	G122-0442940			AUC-3A0219	WASHER, front propeller shaft slip joint dust cap (SP-4-15-43)	1	
	G122-0482206			AUC-3ZD0689	YOKE, flange, front propeller shaft (SP-K4-2-309)	2	
				AUC-3ZD0637A	YOKE, front propeller shaft slip joint sleeve (SP-KL4-3-861) (superseded by YOKE, w/PLUG, assembly, AUC-3ZD0637)	1	
	G122-0482210			AUC-3ZD0637	YOKE, front propeller shaft slip joint sleeve, w/PLUG, assembly (SP-KL4-3-98) (supersedes YOKE, AUC-3ZD0637A)	1	
					INTERMEDIATE PROPELLER SHAFT		
		09-1		AUC-3UN0635	BEARING, needle, intermediate propeller shaft journal, assembly (SP-K5-6-48)	8	
	G104-1531675			AUC-3LE0218	CAP, dust, intermediate propeller shaft slip joint (SP-K5-14-29)	1	
	G104-0601201	09-1		AUC-3CF0633	CAP, needle bearing, intermediate propeller shaft (SP-K5-70-49)	8	
	G104-1593795	09-1		AUC-3UN0729	GASKET, intermediate propeller shaft journal (SP-K5-86-79)	8	
	G104-0600275	09-1		AUC-3UN0632	JOURNAL, intermediate propeller shaft, w/OIL SEAL, assembly (SP-KR5-5-68X)	1	
	G104-0601231	09-1		AUC-3GE0647A	PLATE, lock, intermediate propeller shaft needle bearing cap (SP-98-741)	8	
	G104-1767607			AUC-3UN0728	RETAINER, intermediate propeller shaft journal gasket (SP-K5-76-17)	8	
	G104-0601651	09-1		AUC-3UN0648	SCREW, intermediate propeller shaft needle bearing cap (SP-5-73-109)	16	
				AUC-3LE0753	SHAFT, stub, intermediate propeller shaft, assembly (SP-K5-82-28)	1	
	G104-0602501	09-1		AUC-3DD0755	VALVE, relief, intermediate propeller shaft journal (SP-98-798)	1	

Note Symbol	Official Stock Number	Figure Number	Part Number		ITEM	Quan. Reqd. per Unit Assy.	Unit Price
			Ordnance	Manufacturer			
Col. 1	Col. 2	Col. 3	Col. 4	Col. 5	Col. 6	Col. 7	Col. 8
					0902 — UNIVERSAL JOINTS — Continued		
					INTERMEDIATE PROPELLER SHAFT		
	G104-1842719			AUC-3LE0221	WASHER, felt, intermediate propeller shaft slip joint (SP-K5-16-33)	1	
	G104-0603202			AUC-3LE0689	YOKE, flange, intermediate propeller shaft (sleeve end) (SP-K5-2-379)	1	
	G104-1882300	09-1		AUC-3LE0689A	YOKE, flange, intermediate propeller shaft (spline end) (SP-K5-2-279)	1	
	G150-0482434			AUC-3LE0637A	YOKE, intermediate propeller shaft slip joint sleeve (SP-K5-3-198X)	1	
					REAR PROPELLER SHAFT		
	G104-0600100	09-1		AUC-3UN0635	BEARING, needle, rear propeller shaft journal, assembly (SP-K5-6-78X) (part of KIT, repair, AUC-3UU01173)	8	
	G104-0600201	09-1		AUC-3UB0218	CAP, dust, rear propeller shaft slip joint (SP-4-14-19)	1	
	G104-0601201	09-1		AUC-3CF0633	CAP, needle bearing, rear propeller shaft (SP-K5-70-49) (part of KIT, repair, AUC-3UU01173)	8	
	G104-1593795	09-1		AUC-3UN0729	GASKET, rear propeller shaft journal (SP-K5-86-79)	8	
				AUC-3ZUNC0140	JOINT, slip, rear propeller shaft, assembly (SP-1601-4X) (superseded by JOINT, assembly, AUC-3ZUN0140)	1	
				AUC-3ZUN0140	JOINT, slip, rear propeller shaft, assembly (SP-1601-4X) (supersedes JOINT, assembly, AUC-3ZUNC0140)	1	
	G104-0600275	09-1		AUC-3UN0632	JOURNAL, rear propeller shaft, w/OIL SEAL, assembly (SP-KR5-5-68X) (part of KIT, repair, AUC-3UU01173)	2	
	G104-0600700			AUC-3UU01173	KIT, repair, rear propeller shaft (SP-K5-16X) (Composed of:	1	
				AUC-3UN0635	4 BEARING, assembly		
				AUC-3CF0633	4 CAP, bearing		
				AUC-3UN0632	1 JOURNAL, w/OIL SEAL, assembly		
				AUC-3GE0647A	4 PLATE, lock		
				AUC-3UN0648	8 SCREW, bearing cap)		
	G104-0601231	09-1		AUC-3GE0647A	PLATE, lock, rear propeller shaft needle bearing cap (SP-98-741) (part of KIT, repair, AUC-3UU01173)	8	
	G104-1767607			AUC-3UN0728	RETAINER, rear propeller shaft journal gasket (SP-K5-76-17)	8	
	G104-0601651	09-1		AUC-3UN0648	SCREW, rear propeller shaft needle bearing cap (SP-5-73-109) (part of KIT, repair, AUC-3UU01173)	16	
				AUC-30ZDEA5302	SHAFT, stub, rear propeller shaft, assembly (SP-K5-62-224)	1	
	G104-0602501	09-1		AUC-3DD0755	VALVE, relief, rear propeller shaft journal (SP-98-798)	1	
	G104-0602801	09-1		AUC-3DF0221	WASHER, felt, rear propeller shaft slip joint (SP-K5-16-23)	1	
	G104-0602871	09-1		AUC-3DF0219	WASHER, rear propeller shaft slip joint dust cap (SP-K5-15-23)	1	
	G104-1882300	09-1		AUC-3LE0689A	YOKE, flange, rear propeller shaft (sleeve end) (SP-K5-2-279)	1	
				AUC-3A0689	YOKE, flange, rear propeller shaft (spline end) (SP-K5-2-249)	1	
	G104-2482433	09-1		AUC-3DF0637	YOKE, rear propeller shaft slip joint sleeve (SP-K5-3-108)	1	

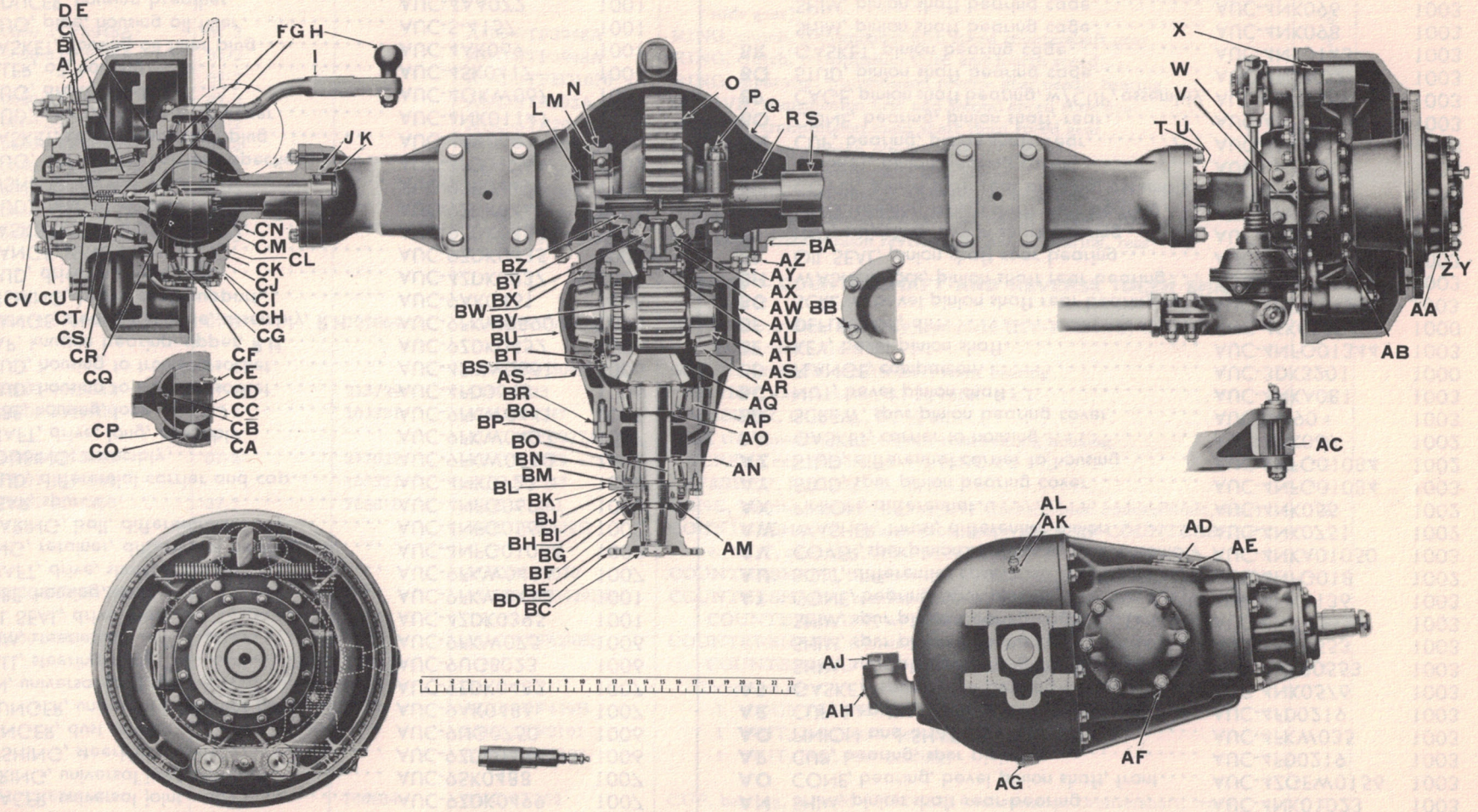

FIGURE 10-1 FRONT AXLE—CROSS SECTIONAL VIEW RA PD 346214

FIGURE 10-1 FRONT AXLE—CROSS SECTIONAL VIEW RA PD 346214 A

KEY	ITEM	PART NO.	GROUP
A	PACKING, universal joint	AUC-9ZDK0489	1007
B	SPACER, universal joint	AUC-9ZDK0499	1007
C	SPRING, universal joint buffer	AUC-9SK0488	1007
D	BUSHING, steering knuckle	AUC-9ZDK0438	1006
E	SLINGER, dust shield	AUC-9UG0750	1006
F	PLUNGER, universal joint pilot pin	AUC-9AK0486	1007
G	PIN, universal joint pilot	AUC-9ZDK0482	1007
H	BALL, steering arm	AUC-9UGB023	1006
I	ARM, steering	AUC-9FKW075	1006
J	OIL SEAL, drive shaft	AUC-4ZDK0395	1001
K	TUBE, housing, short	AUC-9FKW0442	1001
L	SHAFT, drive, short, assembly	AUC-9FKW0434	1007
M	RING, retainer, differential bearing	AUC-4NFG01086	1002
N	BEARING, ball, differential	AUC-4NFG0567	1002
O	GEAR, spur	AUC-4NFG062	1003
P	STUD, differential carrier and cap	AUC-4NK0122	1002
Q	HOUSING, assembly	AUC-9FKW0830	1001
R	SHAFT, drive, long, assembly	AUC-9FKW0433	1007
S	TUBE, housing, long	AUC-9FKW0441	1001
T	STUD, housing to trunnion socket	AUC-4FD0648	1006
U	STUD, housing to trunnion socket	AUC-4FKW0661	1006
V	CAP, knuckle bearing, upper, R.H.	AUC-9ZDK0452	1006
W	FLANGE, steering knuckle, assembly, R.H.	AUC-9FKW0890	1006
X	BUSHING, brake shaft support	AUC-9AK0461	1006
Y	STUD, drive shaft and hub	AUC-4ZDK0237	1007
Z	FLANGE, drive shaft	AUC-9ZDK0435	1007
AA	GASKET, drive shaft flange	AUC-9ZDK0436	1007
AB	STUD, steering knuckle flange	AUC-9ZDK0448	1006
AC	BUSHING, tie rod yoke bolt	AUC-9SK0449	1006
AD	PLUG, differential carrier inspection	AUC-4FD0176	1002
AE	GASKET, carrier inspection plug	AUC-4AK069	1002
AF	STUD, spur pinion bearing cover	AUC-4NK01141	1003
AG	PLUG, drain, housing	AUC-4GKW067	1001
AH	FILLER, oil, housing	AUC-4SK0417	1001
AI	GASKET, housing oil filler plug	AUC-4AK069	1001
AJ	PLUG, pipe, housing oil filler	AUC-S-4157	1001
AK	REDUCER, housing breather	AUC-4AA072	1001
AL	BREATHER, housing, assembly	AUC-4AA01600	1001
AM	NUT, lock, bevel pinion shaft forward bearing	AUC-4NKB081	1003
AN	SHIM, pinion shaft rear bearing	AUC-4NK01023	1003
AO	CONE, bearing, bevel pinion shaft, front	AUC-4ZGEW0156	1003
AP	CUP, bearing, spur pinion	AUC-4FD0219	1003
AQ	PINION and SHAFT, bevel	AUC-4FKW035	1003
AR	CUP, bearing, bevel pinion shaft, front	AUC-4FD0219	1003
AS	GASKET, spur pinion bearing cage	AUC-4NK0576	1003
	SHIM, spur pinion bearing cage	AUC-4NKB0553	1003
	SHIM, spur pinion bearing cage	AUC-4NK0553	1003
	SHIM, spur pinion bearing cage	AUC-4NKA0553	1003
AT	CONE, bearing, spur pinion	AUC-4NK0136	1003
AU	BOLT, differential case	AUC-4NFG018	1002
AV	COVER, spur pinion bearing, w/CUP, assembly	AUC-4NKA01050	1003
AW	WASHER, thrust, differential pinion	AUC-4NK0751	1002
AX	PINION, differential	AUC-4NK055	1002
AY	STUD, spur pinion bearing cover	AUC-4NFG01084	1003
AZ	STUD, differential carrier to housing	AUC-4NFG01084	1002
BA	GASKET, carrier to housing	AUC-4NK069	1002
BB	SCREW, spur pinion bearing cover	AUC-S-790	1003
BC	NUT, bevel pinion shaft	AUC-4NKA081	1003
BD	FLANGE, companion	AUC-3DK3201	1000
BE	KEY, bevel pinion shaft	AUC-4NFG01344	1003
BF	DEFLECTOR, dirt	AUC-4FK01396	1000
BG	SCREW, bevel pinion shaft rear bearing nut	AUC-4FKW01258	1003
BH	WASHER, lock, pinion shaft rear bearing	AUC-4NKA01204	1003
BI	OIL SEAL, pinion shaft rear bearing	AUC-19DKB0214	1003
BJ	NUT, adjusting, pinion shaft bearing	AUC-4NKA029	1003
BK	RING, spinner, pinion shaft rear bearing	AUC-4FKW0762	1003
BL	COVER, pinion shaft rear bearing, assembly	AUC-4NK0470	1003
BM	GASKET, pinion bearing cover	AUC-4NK0582	1003
BN	CUP, bearing, pinion shaft, rear	AUC-3T237	1003
BO	CONE, bearing, pinion shaft, rear	AUC-4NFG0138	1003
BP	CAGE, pinion shaft bearing, w/CUP, assembly	AUC-4NK0460	1003
BQ	STUD, pinion shaft bearing cage	AUC-4FKW0237	1003
BR	GASKET, pinion bearing cage	AUC-4NK0143	1003
	SHIM, pinion shaft bearing cage	AUC-4NK098	1003
	SHIM, pinion shaft bearing cage	AUC-4NK096	1003
	SHIM, pinion shaft bearing cage	AUC-4FKW096	1003

FIGURE 10-1 FRONT AXLE—CROSS SECTIONAL VIEW RA PD 346214 B

KEY	ITEM	PART NO.	GROUP
BS	GEAR, bevel	AUC-4FKW0521	1003
BT	SCREW, bevel gear	AUC-S-2065	1003
BU	COVER, spur pinion brg., w/CUP, assembly	AUC-4NK01050	1003
BV	PINION, spur	AUC-4FKW044	1003
BW	CARRIER, differential, assembly	AUC-9FKW0170	1003
BX	SPIDER, differential	AUC-4NK058	1003
BY	WASHER, thrust, differential side gear	AUC-4ZGEW0638	1003
BZ	GEAR, side, differential	AUC-4NKA057	1003
CA	CAGE, universal joint, inner	AUC-9ZDK0476	1007
CB	RACE, universal joint, inner	AUC-9ZDK0484	1007
CC	PILOT, universal joint	AUC-9ZDK0481	1007
CD	RETAINER, universal joint and shaft	AUC-9ZDK0478	1007
CE	SCREW, universal joint and shaft retainer	AUC-9ZDK0479	1007
CF	CONE, bearing, steering knuckle	AUC-4ZDK0138	1006
CG	CAP, steering knuckle bearing, lower	AUC-4ZDK0453	1006
CH	SHIM, steering knuckle bearing cap	AUC-9ZDKA0454	1006
CI	CUP, bearing, steering knuckle	AUC-4ZDK0139	1006
CJ	FLANGE, steering knuckle, assembly, L.H.	AUC-9FKWA0890	1006
CK	SPRING, trunnion socket felt	AUC-9ZDK0498	1006
CL	FELT, trunnion socket	AUC-9ZDK0447	1006
CM	SOCKET, trunnion, assembly	AUC-9FKW0860	1006
CN	PLUG, pipe, trunnion socket	AUC-S-4745	1006
CO	BALL, universal joint	AUC-9ZDK0477	1007
CP	CAGE, universal joint, outer	AUC-9ZDK0485	1007
CQ	SEAT, universal joint pilot pin	AUC-9ZDK0483	1007
CR	KNUCKLE, steering, assembly	AUC-9ZDK0140	1006
CS	SPRING, universal drive pilot pin plunger	AUC-9AK0487	1007
CT	SPRING, universal joint	AUC-9ZDK0511	1007
CU	PLUG, pipe, universal joint cage, outer	AUC-S-629	1007
CV	SNAP RING, universal joint retainer	AUC-9ZDK0504	1007

Note Symbol	Official Stock Number	Figure Number	Part Number		ITEM	Quan. Reqd. per Unit Assy.	Unit Price
			Ordnance	Manufacturer			
Col. 1	Col. 2	Col. 3	Col. 4	Col. 5	Col. 6	Col. 7	Col. 8
					1000 — FRONT AXLE ASSEMBLY		
				AUC-9FKW9430	AXLE, front, assembly (8.435 ratio) (TD-F-2090W-73-X-3)	1	
				AUC-9FKWA0430	AXLE, front, w/companion FLANGE, assembly	1	
					(Composed of:		
				AUC-9FKW9430	1 AXLE		
				AUC-3DK01750	1 FLANGE, companion, w/dirt DEFLECTOR, assembly)		

Note Symbol	Official Stock Number	Figure Number	Part Number		ITEM	Quan. Reqd. per Unit Assy.	Unit Price
			Ordnance	Manufacturer			
Col. 1	Col. 2	Col. 3	Col. 4	Col. 5	Col. 6	Col. 7	Col. 8
					1000 — FRONT AXLE ASSEMBLY — Continued		
		10-1, 4		AUC-4FK01396	DEFLECTOR, dirt, front axle companion flange	1	
		10-1, 4		AUC-3DK3201	FLANGE, companion, front axle	1	
				AUC-3DK01750	FLANGE, companion, front axle, w/dirt DEFLECTOR, assembly	1	
					(Composed of:		
				AUC-3DK3201	1 FLANGE, companion		
				AUC-4FK01396	1 DEFLECTOR)		
				AUC-9UUA0569	GASKET SET, front axle (TD-MPS-173)	1	
					(Composed of:		
				AUC-4NK0143	1 GASKET, bevel pinion bearing cage		
				AUC-4NK0582	1 GASKET, bevel pinion bearing cover		
				AUC-4NK069	1 GASKET, differential carrier to housing		
				AUC-9ZDK0436	2 GASKET, drive shaft flange		
				AUC-4AK069	2 GASKET, gear carrier inspection plug		
				AUC-4NK0576	2 GASKET, spur pinion bearing cage)		
				AUC-9UUA0571	SHIM SET, front axle (TD-MPS-174)	1	
					(Composed of:		
				AUC-4NK096	1 SHIM, bevel pinion shaft bearing cage, medium		
				AUC-4FKW096	1 SHIM, bevel pinion shaft bearing cage, thick		
				AUC-4NK098	6 SHIM, bevel pinion shaft bearing cage, thin		
				AUC-4NKD01023	1 SHIM, bevel pinion shaft rear bearing, .167		
				AUC-4NKC01023	1 SHIM, bevel pinion shaft rear bearing, .172		
				AUC-4NKB01023	1 SHIM, bevel pinion shaft rear bearing, .177		
				AUC-4NKA01023	1 SHIM, bevel pinion shaft rear bearing, .182		
				AUC-4NK01023	1 SHIM, bevel pinion shaft rear bearing, .187		
				AUC-4NKJ01023	1 SHIM, bevel pinion shaft rear bearing, .189		
				AUC-4NKH01023	1 SHIM, bevel pinion shaft rear bearing, .194		
				AUC-4NKG01023	1 SHIM, bevel pinion shaft rear bearing, .199		
				AUC-4NKF01023	1 SHIM, bevel pinion shaft rear bearing, .204		
				AUC-4NKE01023	1 SHIM, bevel pinion shaft rear bearing, .209		
				AUC-4NK0553	8 SHIM, spur pinion bearing cage, medium		
				AUC-4NKA0553	2 SHIM, spur pinion bearing cage, thick		
				AUC-4NKB0553	2 SHIM, spur pinion bearing cage, thin		
				AUC-9ZDKA0454	4 SHIM, steering knuckle bearing cap, thick		
				AUC-9ZDK0454	20 SHIM, steering knuckle bearing cap, thin)		

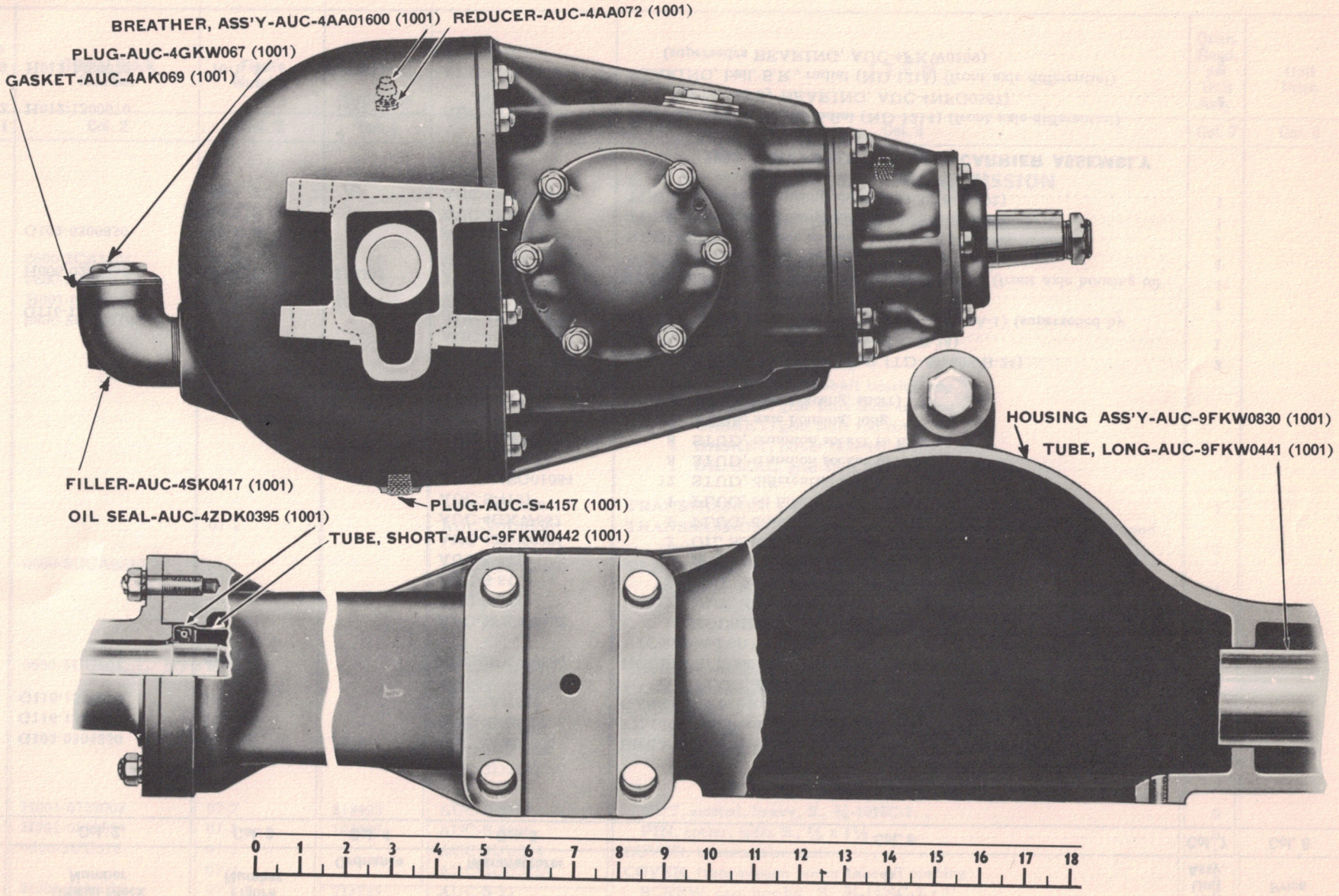

FIGURE 10-2 FRONT AXLE HOUSING RA PD 346215

Note Symbol	Official Stock Number	Figure Number	Part Number		ITEM	Quan. Reqd. per Unit Assy.	Unit Price
			Ordnance	Manufacturer			
Col. 1	Col. 2	Col. 3	Col. 4	Col. 5	Col. 6	Col. 7	Col. 8
					1001 — HOUSING		
	G102-0304350	10-1, 2		AUC-4AA01600	BREATHER, front axle housing, assembly (TD-A-1199-C-1043)	1	
	G116-1569034	10-1, 2		AUC-4SK0417	FILLER, oil, front axle housing (TD-3885-A-1)	1	
	G116-1594074	10-1, 2		AUC-4AK069	GASKET, front axle housing oil filler plug (TD-2808-N-300) (used only with PLUG, AUC-4FD0176)	1	
		01-1, 2		AUC-9FKW0830	HOUSING, front axle, assembly (TD-A-3801-G-397)	1	
					(Composed of:		
				AUC-9FKW0432	1 HOUSING		
				AUC-S-3723	12 NUT, differential carrier to housing		
				AUC-S-84	8 NUT, trunnion socket to housing		
				AUC-S-847	8 NUT, trunnion socket to housing		
				AUC-4ZDK0395	2 OIL SEAL, axle drive shaft		
				AUC-4GKW067	1 PLUG, drain		
				AUC-S-4157	1 PLUG, oil filler		
				AUC-4NFG01084	12 STUD, differential carrier to housing		
				AUC-4FD0648	8 STUD, trunnion socket to housing		
				AUC-4FKW0661	8 STUD, trunnion socket to housing		
				AUC-9FKW0441	1 TUBE, axle housing, long		
				AUC-9FKW0442	1 TUBE, axle housing, short)		
		10-1, 2		AUC-4ZDK0395	OIL SEAL, front axle drive shaft (TD-A-1805-B-24)	2	
		10-1, 2		AUC-4GKW067	PLUG, drain, front axle housing (TD-P-28)	1	
	G116-1531555			AUC-4FD0176	PLUG, oil filler, front axle housing (TD-1850-A-1) (superseded by PLUG, AUC-S-4157)	1	
H-6	H006-0283830	10-1, 2	219305	AUC-S-4157	PLUG, pipe, sq-hd., black, 1¼ in. (TD-P-120) (front axle housing oil filler) (supersedes PLUG, AUC-4FD0176)	1	
	G102-0300850	10-1, 2		AUC-4AA072	REDUCER, front axle housing breather (TD-1898-W-205)	1	
		10-1, 2		AUC-9FKW0441	TUBE, front axle housing, long (TD-3816-E-291)	1	
		10-1, 2		AUC-9FKW0442	TUBE, front axle housing, short (TD-3816-F-292)	1	
					1002 — DIFFERENTIAL AND CARRIER ASSEMBLY		
H-12	H012-1300070		700543	AUC-4FKW0209	BEARING, ball, S. R., radial (ND-1214) (front axle differential) (superseded by BEARING, AUC-4NFG0567)	2	
H-12	H012-1300070	10-1, 3	700543	AUC-4NFG0567	BEARING, ball, S.R., radial (ND-1214) (front axle differential) (supersedes BEARING, AUC-4FKW0209)	2	