RESTRICTED

TM9-804

DEPARTMENT OF THE ARMY TECHNI

M5-19

1/4-TON, 4 x 4
UTILITY TRUCK M38
(WILLYS-OVERLAND)

DEPARTMENT OF THE ARMY • SEPTEMBER 1950

RESTRICTED

RESTRICTED

DEPARTMENT OF THE ARMY TECHNICAL MANUAL

TM 9-804

SGV TD

1/4-TON, 4 x 4
UTILITY TRUCK M38
(WILLYS-OVERLAND)



DEPARTMENT OF THE ARMY • *SEPTEMBER 1950*

United States Government Printing Office
Washington : 1950

RESTRICTED

DEPARTMENT OF THE ARMY
WASHINGTON 25, D. C., *29 September 1950*

TM 9–804 is published for the information and guidance of all concerned.

[AG 451 (25 Sep 50)]

BY ORDER OF THE SECRETARY OF THE ARMY:

OFFICIAL:
EDWARD F. WITSELL
Major General, USA
The Adjutant General

J. LAWTON COLLINS
Chief of Staff, United States Army

DISTRIBUTION:
Tech Sv (2) except 9 (25); Arm & Sv Bd (2); AFF (2); OS Maj Comd (10); Base Comd (2); MDW (3); A (20); CHQ (2); D (2); R 5, 7 (1); 9 (2); 17 (1); Bn 2, 3, 5–8 (1); 9 (2); 10–12, 17, 19, 44, 55 (1); C 2, 3, 5–8 (1); 9 (2); 10–12, 14, 17, 19, 28, 30, 44, 55, 71 (1); FC (1); Sch (5) except 9 (50); Gen Dep (1); Dep 9 (3); PE (Ord O) (5); OSD (1); PG 9 (3); Ars 9 (3); Dist 9 (3); SPECIAL DISTRIBUTION.
For explanation of distribution formula see SR 310–90–1.

CONTENTS

		Paragraphs	Page
CHAPTER 1.	**INTRODUCTION**		
Section I.	General	1–2	1
II.	Description and data	3–5	2
CHAPTER 2.	**OPERATING INSTRUCTIONS**		
Section I.	Service upon receipt of matériel	6–9	8
II.	Controls and instruments	10–22	13
III.	Operation under usual conditions	23–26	16
IV.	Operation under unusual conditions	27–33	20
CHAPTER 3.	**ORGANIZATIONAL MAINTENANCE INSTRUCTIONS**		
Section I.	Parts, special tools, and equipment for organizational maintenance	34–35	35
II.	Lubrication and painting	36–39	38
III.	Preventive maintenance services	40–43	46
IV.	Trouble-shooting	44–63	75
V.	Engine description and maintenance in vehicle	64–73	89
VI.	Power plant removal and installation	74–112	94
VII.	Engine removal and installation	113–115	104
VIII.	Clutch	116–120	105
IX.	Fuel system	121–125	108
X.	Exhaust system	126–128	112
XI.	Cooling system	129–134	113
XII.	Ignition system	135–139	118
XIII.	Starting system	140–141	122
XIV.	Generating system	142–144	124
XV.	Transmission	145–148	126
XVI.	Transfer	149–152	129
XVII.	Propeller shafts	153–155	130
XVIII.	Front axle	156–167	131
XIX.	Rear axle	168–175	137
XX.	Brakes	176–182	140
XXI.	Springs and shock absorbers	183–187	148
XXII.	Steering system	188–193	153
XXIII.	Batteries and lighting system	194–202	157
XXIV.	Wheels and tires	203–205	166
XXV.	Winch	206–210	167
XXVI.	Radio interference suppression	211–212	170
XXVII.	Wiring, circuits, and harnesses	213–215	170
XXVIII.	Instrument cluster, gages, switches, and sending units	216–229	174
XXIX.	Body and frame	230–241	180
XXX.	Maintenance under unusual conditions	242–249	185
CHAPTER 4.	**SHIPMENT AND LIMITED STORAGE AND DESTRUCTION TO PREVENT ENEMY USE**		
Section I.	Shipment and limited storage	250–254	198
II.	Destruction of matériel to prevent enemy use	255–256	209
APPENDIX.	**REFERENCES**		212
INDEX			215

CHAPTER 1
INTRODUCTION

Section I. GENERAL

1. Scope

a. These instructions are published for the information and guidance of personnel to whom this matériel is issued. They contain information on the operation and organizational maintenance of the matériel, as well as descriptions of major units and their functions in relation to other components of the matériel.

b. The appendix contains a list of current references, including supply catalogs, technical manuals, and other available publications applicable to the matériel.

2. Forms, Records, and Reports

a. GENERAL. Forms, records, and reports are designed to serve necessary and useful purposes. Responsibility for the proper execution of these forms rests upon commanding officers of all units operating and maintaining vehicles. It is emphasized, however, that forms, records, and reports are merely aids. They are not a substitute for thorough practical work, physical inspection, and active supervision.

b. AUTHORIZED FORMS. The forms, records, and reports generally applicable to units operating and maintaining these vehicles are listed below. No forms other than approved Department of the Army forms will be used. For a current and complete listing of all forms, see SR 310–20–6.

Standard Form 91, Operator's Report of Motor Vehicle Accident.
Standard Form 91A, Transcript of Operator's Report of Motor Vehicle Accident.
Standard Form 93, Report of Investigating Officer.
Standard Form 94, Statement of Witness.
DD Form 110, Vehicle and Equipment Operational Record.

DA AGO Form 9–68, Spot Check Inspection Record for Wheeled and Half-Track Vehicles.
DA AGO Form 9–73, Data for Registration—Motor Vehicle.
DA AGO Form 9–74, Motor Vehicle Operator's Permit.
DA AGO Form 9–75, Daily Dispatching Record of Motor Vehicles.
DA AGO Form 348, Driver Qualification Record.
DA AGO Form 460, Preventive Maintenance Roster.
DA AGO Form 461, Work Sheet for Wheeled and Half-Track Vehicles.
DA AGO Form 468, Unsatisfactory Equipment Report.
DA AGO Form 478, MWO and Major Unit Assembly Replacement Record and Organizational Equipment File.
DA AGO Form 614, Accident—Identification Card.
DA AGO Form 811, Work Request and Job Order.
DA AGO Form 811–1, Work Request and Hand Receipt.

c. Field Report of Accidents. The reports necessary to comply with the requirements of the Army safety program are prescribed in detail in the SR 385–10–40 series of special regulations. These reports are required whenever accidents occur involving injury to personnel or damage to matériel.

d. Report of Unsatisfactory Equipment or Matériels. Any suggestions for improvement in design, maintenance, safety, and efficiency of operation prompted by chronic failure or malfunction of the matériel, spare parts, or equipment or as to defects in the application or effect of prescribed petroleum fuels, lubricants, and/or preserving matériels will be reported through technical channels to the Chief of Ordnance, Washington 25, D. C., ATTN: ORDFM, using DA AGO Form 468. Suggestions are encouraged in order that other organizations may benefit.

Section II. DESCRIPTION AND DATA

3. Description

a. General. This vehicle is a general purpose personnel or cargo carrier especially designed for adaptation to general reconnaissance, command communications, or other special duties. It is a four-wheel vehicle with four-wheel drive and designated as ¼-ton 4 x 4 utility truck M38. The design locates the four-cylinder gasoline engine forward under the hood and provides a four-passenger open-type body, which can be enclosed with removable canvas top and side curtains held in place by suitable metal bows and rods. The conventional three-speed transmission is supplemented by a two-speed transfer which, in addition to providing a power line to the front axle, provides additional speeds for traversing difficult terrain. The windshield can

be folded flat on top of the hood for low silhouette and forward firing. The spare wheel and tire are mounted on the rear panel and a pintle is provided at the rear for towing purposes. This vehicle is constructed for short period underwater operation, which is accomplished by the waterproofing of electrical units and providing a venting system connected to the air cleaner. A kit is available which extends the air intake and exhaust pipes, thus permitting fording of deeper water (par. 33*d*). Such design permits use of the vehicle in landing and fording operations. General physical characteristics are shown in figures 1 to 3.

b. IDENTIFICATION. The manufacturer's serial number is stamped on the nomenclature plate (fig. 4) located on the instrument panel. The engine serial number is stamped on the top of the water pump boss on the front of the cylinder block. The USA registration number is stenciled on each side of the hood panel.

4. Name, Caution, and Instruction Plates

The various name, caution, and instruction plates are located on the instrument panel (fig. 5) and are listed as follows:

Nomenclature plate (fig. 4).
Name and patent plate (fig. 4).
Speeds and coolant information plate (fig. 4).
Center of gravity plate (fig. 4).
Shipping data plate (fig. 4).
Shifting and tire inflation instruction plate (fig. 4).

5. Tabulated Data

a. GENERAL DATA.

Wheelbase	80 in.
Length over-all	132 15/16 in.
Width over-all (min)	62 in.
Height over-all (max)	67¼ in.
Lowest operable	54 in.
Wheel size	16 x 4.50E combat.
Tire size	7.00–16.
Tire pressure	28 p. s. i.
Tire type	Nondirectional mud and snow.
Tire plies	6.
Tread—front	49⅛ in.
Tread—rear	49 3/16 in.
Crew—operating	1.
Weights:	
Total w/o crew	
Highway	3,825 lb.
Cross country	3,425 lb.
Payload (max)	
Highway	1,200 lb.
Cross country	800 lb.



Figure 1. Vehicle with top installed.

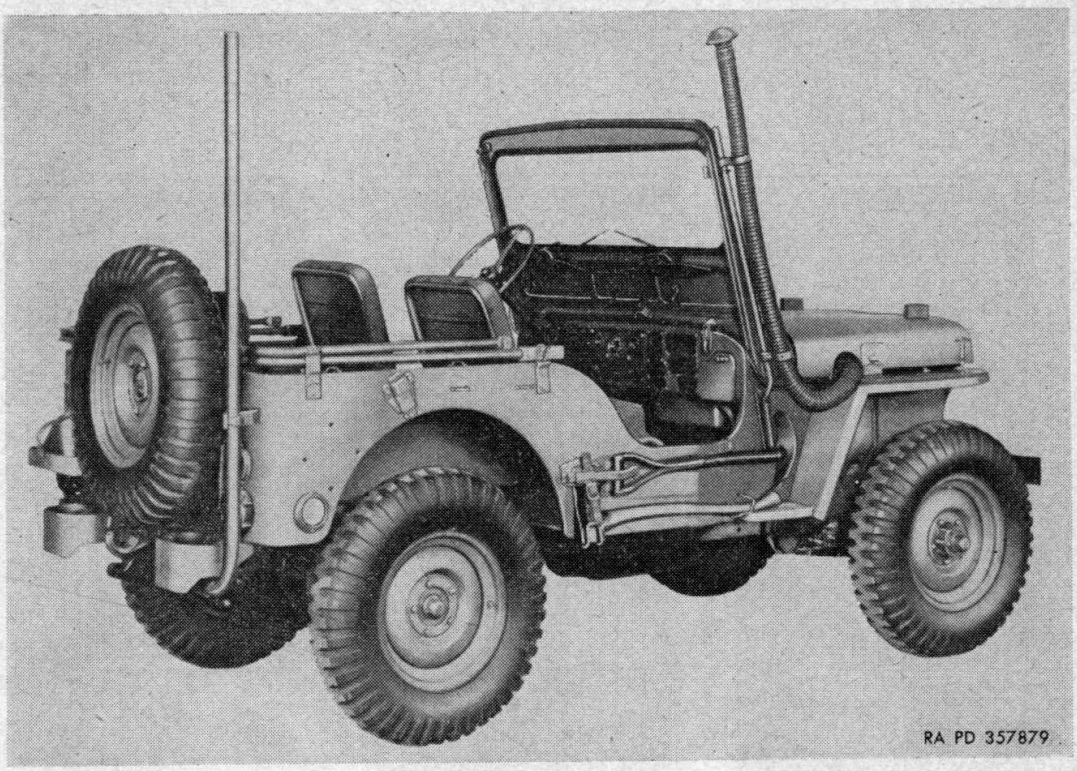

Figure 2. Right rear view of vehicle.

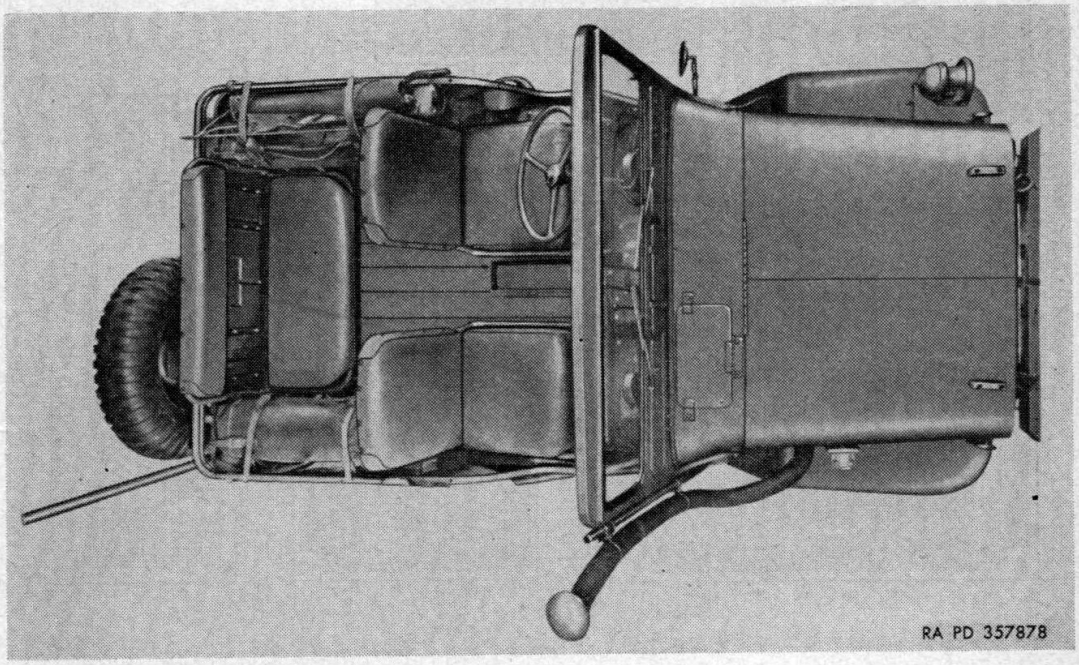

Figure 3. Top view of vehicle.

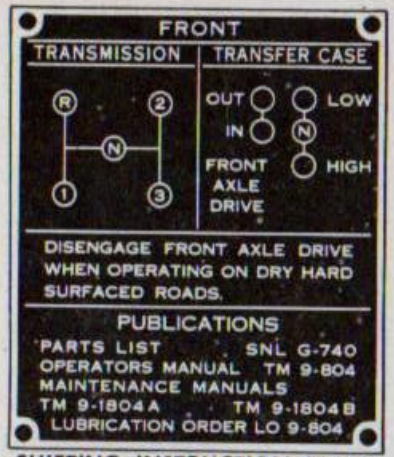

SHIFTING INSTRUCTION PLATE

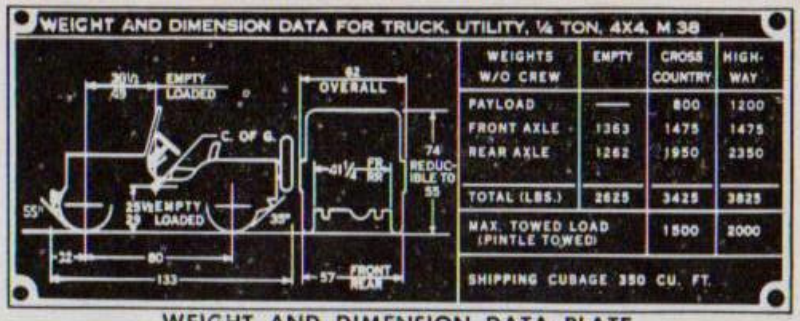

WEIGHT AND DIMENSION DATA PLATE

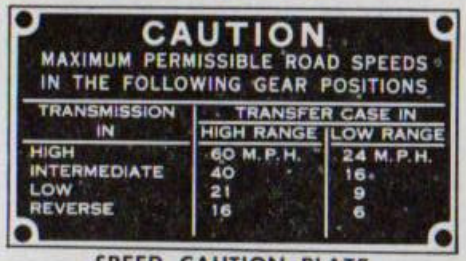

SPEED CAUTION PLATE

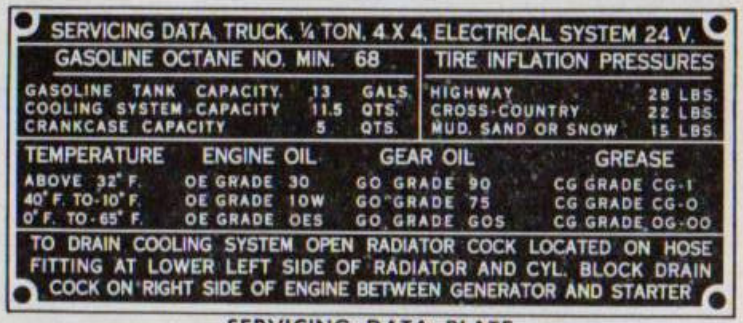

SERVICING DATA PLATE

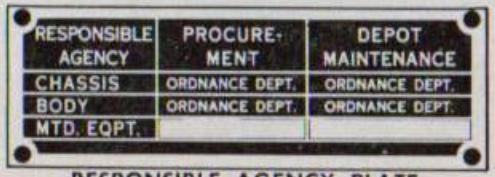

RESPONSIBLE AGENCY PLATE

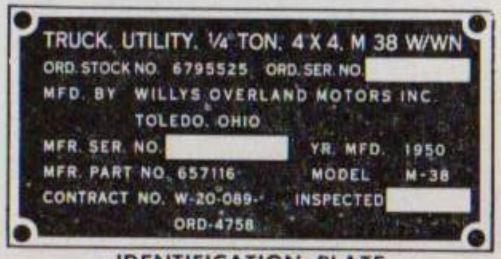

IDENTIFICATION PLATE

RA PD 357942

Figure 4. Name, caution, and instruction plates.

Weights—Continued	
Trailer load (max)	
Highway	2,000 lb.
Cross country	1,500 lb.
Ground clearance (min)	(Rear axle) 9¼ in.
Pintle height	21½ in.
Gasoline octane rating	68 min.
Angle of approach	55°
Angle of departure	35°

b. Performance

Maximum recommended speeds with transfer case in "HIGH" range:	
High	60 mph
Intermediate	38 mph
Low	21 mph
Reverse	16 mph
Maximum recommended speeds with transfer in "LOW" range:	
High	24 mph
Intermediate	16 mph
Low	9 mph
Reverse	6 mph
Maximum grade ability	76%
Minimum turning radius	20 ft. right 19 ft. left

CHAPTER 2

OPERATING INSTRUCTIONS

Section I. SERVICE UPON RECEIPT OF MATÉRIEL

6. Purpose

a. When a new or reconditioned vehicle is first received by the using organization, it is necessary for the organizational mechanics to determine whether the vehicle has been properly prepared for service by the supplying organization and to be sure it is in condition to perform any mission to which it may be assigned, when placed in service. For this purpose, inspect all assemblies, subassemblies, and accessories to be sure they are properly assembled, secure, clean, and correctly adjusted and/or lubricated. Check all tools and equipment to be sure every item is present, in good condition, clean, and properly mounted or stowed.

b. In addition, perform a run-in test of at least 50 miles on all new or reconditioned vehicles and a sufficient number of miles on used vehicles to completely check their operation, according to procedures in paragraph 9.

c. Whenever practicable, the driver will assist in the performance of these services.

7. Correction of Deficiencies

Deficiencies disclosed during the course of these services will be treated as follows:

a. Correct any deficiencies within the scope of the maintenance echelon of the using organization, before the vehicle is placed in service.

b. Deficiencies beyond the scope of the maintenance echelon of the using organization will be referred to a higher echelon for correction.

c. Bring deficiencies of a serious nature to the attention of the supplying organization through proper channels.

8. Preliminary Service

a. GENERAL. Before performing run-in test, as directed in paragraph 9, the procedures outlined in *b* below will be performed.

b. PROCEDURES.

(1) *Fuel, oil, and water.* Fill fuel tank. Check crankcase oil and coolant supply; add oil and coolant, as necessary, to bring to correct levels. Allow room for expansion in fuel tank and radiator. During freezing weather, test value of antifreeze and add, as necessary, to protect cooling system against freezing (par. 129).

Caution: If there is a tag attached to filler cap or steering wheel concerning engine oil in crankcase, follow instructions on tag before driving the vehicle.

(2) *Battery.* Make hydrometer and voltage test of battery and add clean water to bring electrolyte one-half inch above plate (par. 195).

(3) *Air cleaner.* Examine carburetor air cleaner to see if it is in good condition and secure (par. 122). Remove element and wash thoroughly in volatile mineral spirits paint thinner. Fill oil cup to indicated level with fresh oil, and reinstall securely. Be sure oil cup and body gaskets are in good condition, and that all tube connections are watertight.

(4) *Accessories and belt.* See that accessories such as carburetor, generator, regulator, starter, distributor, water pump, fan, and oil filter, are mounted securely. Make sure that fan and generator drive belt is in good condition, and adjusted to have 1-inch finger-pressure deflection.

(5) *Electrical wiring.* Examine all accessible wiring and conduits to see if they are in good condition, securely connected, and properly supported.

(6) *Tires.* See that all tires, including spare, are properly inflated to 28 psi, cool; that stems are in correct position; all valve caps present, and finger tight. If tires other than 7.00–16, 6-ply are used, determine proper pressure for that particular tire. Inspect for damage, and remove objects lodged in treads and carcasses.

(7) *Wheel and flange nuts.* See that all wheel mounting, rim, and axle flange nuts are present and secure.

(8) *Fenders and bumper.* Examine fenders and front bumper for looseness and damage.

(9) *Towing connections.* Examine towing hooks and pintle for looseness and damage, and see that pintle latch operates properly and locks securely.

(10) *Body.* See that all body mountings are secure. Inspect attachments, hardware, glass, seats, top and frame, and cur-

tains and hood, to see if they are in good condition, correctly assembled, and securely mounted or fastened. Examine body paint and signs of rust. See that vehicle markings are legible.

(11) *Lubricate.* Perform a complete lubrication service of the vehicle, covering all intervals, according to instructions on lubrication order (fig. 9) except units already lubricated or serviced in items (1) to (10). Check all gear case oil levels and add oil, as necessary, to bring to proper levels. Change only if condition of oil indicates the necessity, or if gear oil is not of proper grade for existing or anticipated atmospheric temperatures.

Note. Perform following items (12) through (15) during lubrication.

(12) *Springs and suspensions.* Inspect front and rear springs and shock absorbers to see that they are in good condition, correctly assembled, and secure, and that bushings and shackle pins are not excessively loose or damaged (sec. XXI).

(13) *Steering linkage.* See that all steering arms, rods, and connections are in good condition and secure; and that gear case is securely mounted and not leaking (sec. XXII).

(14) *Propeller shafts.* Inspect all shafts and universal joints to see if they are in good condition, correctly assembled, alined, secure, and not leaking (sec. XVII).

(15) *Axle and transfer vents.* See that axle housing vents and transfer vent line are present, in good condition, and not clogged (fig. 7).

(16) *Choke.* Examine choke to be sure it opens and closes fully in response to operation of choke button.

(17) *Engine warm-up.* Start engine and note if starter action is satisfactory, and if engine has any tendency toward hard starting. Set hand throttle to run engine at fast idle during warm-up. During warm-up, reset choke button so that engine runs smoothly, and to prevent overchoking and oil dilution.

(18) *Instruments.*

(*a*) *Oil-pressure gage.* Immediately after engine starts, observe if oil pressure is satisfactory. (Normal operating pressure, hot, at running speeds is 30 to 35 psi; at idle, 10 psi.) Stop engine if pressure is not indicated in 30 seconds.

(*b*) *Battery charge indicator.* The indicator should show charge. High charge may be indicated until generator restores to battery current used in starting.

(*c*) *Temperature gage.* Engine temperature should rise grad-

ually during warm-up period to normal operating range, 160° F. to 180° F.

(*d*) *Fuel gage.* Fuel gage should register "FULL" if tank has been filled.

(19) *Engine controls.* Observe if engine responds properly to controls, and if controls operate without excessive looseness or binding.

(20) *Horn and windshield wipers.* See that these items are in good condition and secure. If tactical situation permits, test horn for proper operation and tone. See if wiper arms will operate through their full range, and that blade contacts glass evenly and firmly.

(21) *Glass and rear view mirror.* Clean all body glass, curtain windows and mirror, and inspect for looseness and damage. Adjust mirror for correct vision.

(22) *Lamps (lights) and reflectors.* Clean lenses and inspect all units for looseness and damage. If tactical situation permits, open and close all light switches to see if lamps respond properly.

(23) *Leaks, general.* Look under vehicle, and within engine compartment, for indications of fuel, oil, coolant, and brake fluid leaks. Trace any leaks found to source, and correct or report them to designated authority.

(24) *Tools and equipment.* Check tools and on-vehicle stowage lists (par. 34) to be sure all items are present, and to see that they are serviceable and properly stowed.

9. Run-in Test

a. PROCEDURES. Refer to section III of this chapter for operating instructions. Perform the following procedures, steps (1) to (11), inclusive, during the road test of the vehicle. On vehicles which have been driven 50 miles or more in the course of delivery from the supplying to the using organization, reduce the length of the road test to the least mileage necessary to make observations listed below.

Caution: Continuous operation of the vehicle at speeds approaching the maximum indicated on the caution plate (fig. 4) should be avoided during the test.

(1) *Dash instruments and gages.* Do not move vehicle until engine temperature reaches 135° F. Maximum safe operating temperature is 200° F. Observe reading of charge indicator, oil temperature, and fuel gages to be sure they are indicating the proper functioning of the units to which they apply. Also see that speedometer registers the vehicle speed, and that odometer registers accumulating mileage.

(2) *Brakes—foot and hand.* Test service brakes to see if they stop vehicle effectively without side pull, chatter, or squealing; and observe if pedal has at least one-half inch free travel before meeting push-rod-to-piston resistance. Parking brake should hold vehicle on reasonable incline, leaving one-third lever ratchet travel in reserve.

Caution: Avoid long application of brakes until shoes become evenly seated to drums.

(3) *Clutch.* Observe if clutch operates smoothly without grab, chatter, or squeal on engagement, or slippage (under load) when fully engaged. See that pedal has 1¼ inches free travel (fig. 24) before meeting resistance.

Caution: Do not ride clutch pedal at any time, and do not engage and disengage new clutch severely or unnecessarily.

(4) *Transmission and transfer.* Gearshift mechanism should operate easily and smoothly, and gears should operate without excessive noise, and not slip out of mesh. Test front axle declutching for proper operation.

(5) *Steering.* Observe steering action for binding or looseness, and note any excessive pull to one side, wander, shimmy, or wheel tramp. See that column, bracket, and wheel are secure.

(6) *Engine.* Be on the alert for any abnormal engine operating characteristics or unusual noise, such as lack of pulling power or acceleration, backfiring, misfiring, stalling, overheating, or excessive exhaust smoke. Observe if engine responds properly to all controls.

(7) *Unusual noise.* Be on the alert throughout road test for any unusual noise from body and attachments, running gear, suspension, or wheels, that might indicate looseness, damage, wear, inadequate lubrication, or underinflated tires.

Note. Halt vehicle at 10-mile intervals for service (8) and (9) below.

(8) *Temperatures.* Cautiously hand feel each brake drum and wheel hub for abnormal temperatures. Examine the transmission, transfer, and differential housing for indications of overheating and excessive lubricant leaks at seals, gaskets, or vents.

Note. Transfer temperatures normally are higher than other gear cases.

(9) *Leaks.* With engine running, and fuel, engine oil, and cooling systems under pressure, look within engine compartment and under vehicle for indications of leaks.

b. Vehicle Publications and Reports.

(1) *Publications.* See that the vehicle operator's manual, lubrication order, Standard Form 91, and DA AGO Form 478 are in the vehicle, legible, and properly stowed.

Note. Department of the Army registration number and vehicle nomenclature must be filled in on DA AGO Form 478 for new vehicles.

(2) *Reports.* Upon completion of run-in test, correct or report any deficiences noted. Report general condition of vehicle to designated individual in authority.

Section II. CONTROLS AND INSTRUMENTS

10. General

This section describes, locates, and furnishes the driver with sufficient information pertaining to the various controls and instruments provided for the proper operation of the vehicle.

11. Operating Controls

The operating controls of this vehicle, including those for the steering clutch, foot brake, accelerator (foot throttle), choke and hand throttle, and transmission shifting, are of conventional automotive design and their locations are indicated in figure 4. The transfer and front axle drive controls are covered in paragraph 12.

12. Transfer Shift Controls

Two shifting levers are provided on the transfer (fig. 4). The left lever controls the drive selection to the front axle while the right lever permits the choice of auxiliary speed ranges. See shifting plate in figure 4. "Low" auxiliary range can be selected only while in four-wheel drive. "High" range may be selected for both two- and four-wheel drive.

13. Parking Brake Handle

The parking or hand brake is operated by a handle located at the left of the instrument panel (fig. 5). A mechanical brake on the rear propeller shaft is actuated by pulling the handle outward from the instrument panel. A ratchet holds the lever in a vertical position until released by a quarter turn of the handle, allowing it to return to its original position.

14. Light Switch

The light switch is a rotary type. Three levers are provided to control the various lighting circuits (fig. 7). Lever No. 3 is an interlock which controls the selectivity of the other two, permitting the

908329—50——2

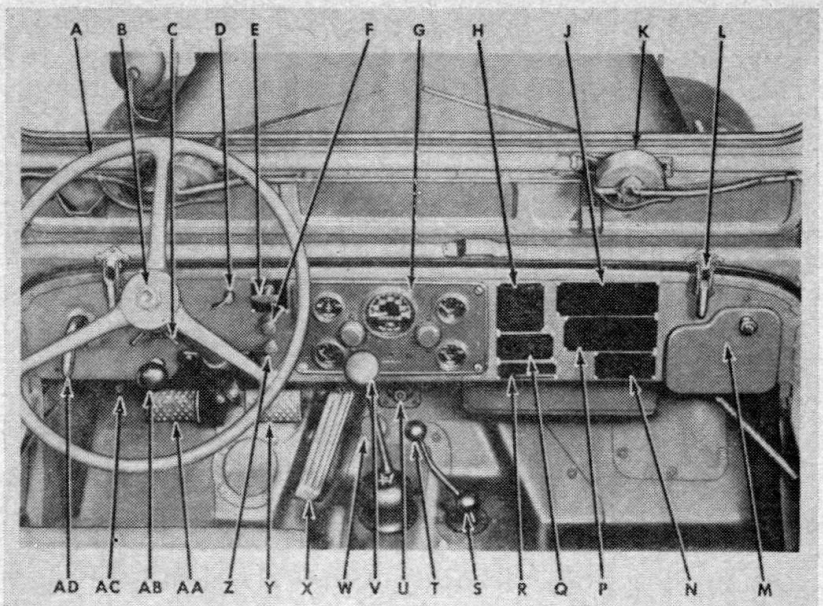

Figure 5. Instruments and controls.

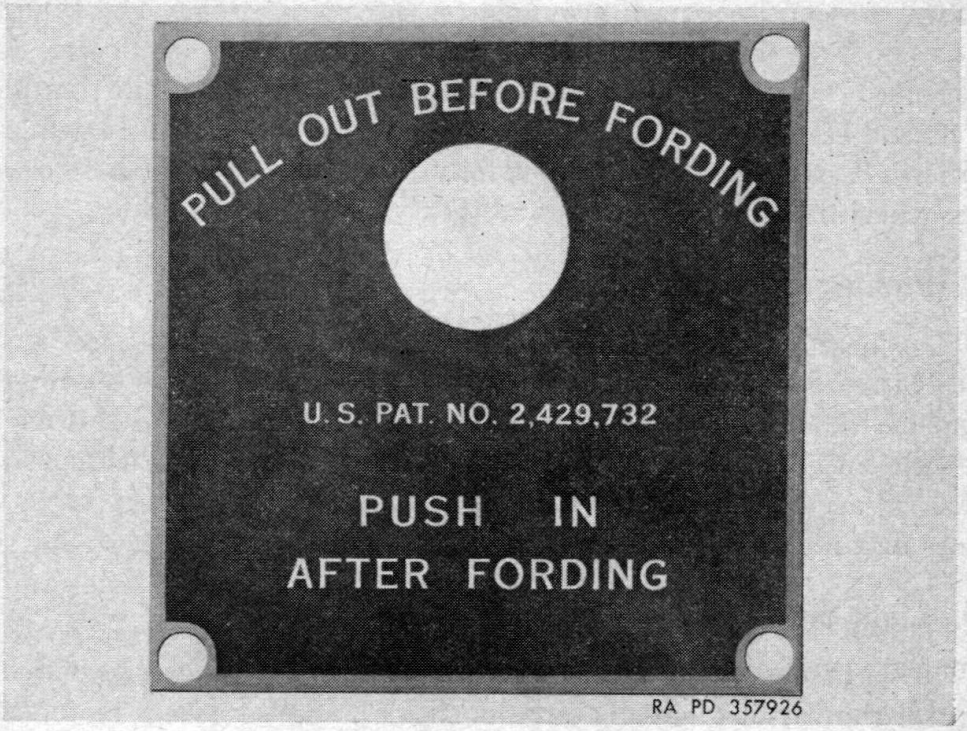

Figure 6. Fording control valve plate.

use of either standard or blackout lights. Lever No. 1 cannot be used to control the regular service lights until lever No. 3 has been held to the right and lever No. 2 turned to the "service drive" position. This set-up prevents the possibility of accidentally turning on the service lights when only blackout lights are desired.

15. Head Light Dimmer Switch

The head light dimmer switch is foot operated, has a special waterproof case, and is located to the left of the clutch pedal. It controls the high and low beams of the service driving head lights.

16. Crankcase Vent Valves Control

The crankcase vent valves control (fig. 5) permits the sealing of the crankcase for underwater operation when handle is pulled out.

Note. Follow the instructions on the warning plate for the operation of this control (fig. 6).

17. Speedometer

The speedometer is located in the center of the instrument cluster (fig. 70) and registers, in miles per hour, the vehicle speed. The odometer registers the accumulated mileage the vehicle has been driven.

18. Oil Pressure Gage

The oil pressure gage is located in the lower right corner of the instrument cluster and indicates engine oil pressure. Under normal driving conditions, this should read 30 to 35 psi and about 10 psi when idling.

19. Fuel Gage

The fuel gage is located above the oil gage in the instrument cluster (fig. 70) and indicates the amount of fuel in the tank.

20. Engine Temperature Gage

The temperature gage is located in the lower left corner of the instrument cluster (fig. 70) and indicates the temperature of the engine coolant. The normal driving temperature is 160° F. to 180° F.

21. Battery Charge Indicator

The battery charge indicator is located above the temperature gage in the instrument cluster (fig. 70). It is not the usual type ammeter, but is only an indicator which shows the operator the condition of the charging circuit. A slight "charge" should be indicated normally. For a short time after starting the engine, this "charge" will be higher until starting current drain is replaced in the battery.

22. Headlight High Beam Indicator

Directly under the speedometer, in the instrument cluster, is the high beam indicator (fig. 70). The ruby light indicates when the "high beams" of the service driving headlights are on.

Section III. OPERATION UNDER USUAL CONDITIONS

23. General

This section contains instructions for the mechanical steps necessary to operate the vehicle under conditions of moderate temperatures and humidity. For operation under unusual conditions, refer to chapter 2, section IV.

24. Starting the Engine

a. Put transmission gear shift lever in neutral position (fig. 5).

b. Pull out hand throttle control about ¾ to 1 inch.

c. Pull out choke control all the way.

Note. Choking is not necessary when engine is warm. The engine priming pump is provided for starting in extreme cold (par. 29).

d. Turn ignition switch lever clockwise to "on" position.

e. Depress clutch pedal to disengage clutch and hold down while engine is started.

f. Step on starter pedal to crank engine; release as soon as engine starts.

g. Adjust choke and throttle controls to obtain proper idling speed. As engine warms up, push choke control all the way in.

h. Check oil pressure gage reading—at idle speed with engine warm the indicator hand should show 5 to 10 on the gage.

Note. A cold engine will indicate higher and reading will drop as oil becomes warm.

i. Check battery indicator for charge reading and fuel gage for indication of fuel supply.

j. After a few minutes operation, check the temperature gage reading. Normal operating temperature should be between 160° F. and 180° F.

25. Driving the Vehicle

Note. Before a new or reconditioned vehicle is put into service, perform run-in test as outlined in paragraph 9.

a. Placing the Vehicle in Motion.

(1) Place transfer right-hand shift lever in rear position to engage the "high" range. Then place center shift lever in forward position to disengage the front axle (fig. 5).

(2) Depress clutch pedal and move the transmission shift lever

toward the driver and backward to engage low (1st) gear (fig. 5).

(3) Release parking (hand) brake.

(4) Slightly depress accelerator to increase engine speed and at the same time slowly release clutch pedal. Gradually increase pressure on the accelerator as the clutch engages and vehicle starts to move.

Note. During the next two operations perform the procedures as outlined in table II (par. 42), under "during operation."

(5) Increase speed to approximately 10 miles per hour, depress clutch pedal and, at the same time, release pressure on the accelerator. Move transmission shift lever out of low gear, across neutral position, and then forward into second gear. No double clutching is required. Release clutch pedal and accelerate engine.

(6) After vehicle has attained a speed of approximately 20 miles per hour, follow the same procedure as above but shift lever into high (3d) gear by moving the gearshift lever straight back.

Note. Follow directions given for "during operation," table II, paragraph 42.

b. Shifting to Lower Speeds While in Motion (Double Clutching).

(1) When approaching a hill or stretch of soft terrain, shifting of gears to lower speeds may be accomplished without grinding of gears by "double-clutching."

(2) Shift to a lower gear before the engine begins to labor. The following operations must be accomplished in sequence and as rapidly as possible to avoid unnecessary loss of vehicle speed.

(3) Depress clutch pedal and quickly move transmission gear shift lever into neutral position.

(4) Engage clutch pedal and accelerate engine to slightly more than the speed needed to maintain same vehicle speed in the gear being selected. This speeds up the drive gear to match the speed of the driven gear in the transmission.

(5) Quickly depress clutch; move shift lever to desired (next lower) position; engage clutch; and accelerate engine to suit vehicle speed desired. The engine need not be decelerated for the latter operations. When the two mating gears engage at identical speeds, no clutch slippage will occur.

c. Shifting Gears in Transfer (fig. 5). The transfer provides a means by which power may be applied to the front axle as well as the rear. In addition, the low-range gear provided by the transfer doubles the number of speeds provided by the transmission. The

selection of gear ratios depends upon the road and load conditions. Shift gears in the transfer in accordance with shifting instruction plate (fig. 4) and observe the instructions on the "CAUTION" plate, both located on the instrument panel (fig. 4). Transmission gear selection does not, in any way, affect the selection or shifting of the transfer gears. The vehicle may be driven by the rear axle or by both front and rear axles. The front axle cannot be driven independently except in emergencies when the rear drive shaft is removed (par. 26).

(1) *Front axle drive.* The front axle should be engaged only in off-the-road operation, slippery roads, steep grades, or during hard pulling and deep-water fording. Disengage the front axle when operating on average roads under normal conditions. Engagement may be made with vehicle at standstill or in motion. Transfer must be in "LOW"-range position for use of front axle drive.

(*a*) *Engaging front axle drive.* Pull front axle drive shift lever to "IN" position (rearward). Depress the clutch pedal to facilitate shifting.

(*b*) *Disengaging front axle drive.* Push front axle drive shift lever to "OUT" position (forward). Depress clutch pedal to facilitate shifting.

(2) *Selection of transfer low- and high-range speeds.*

(*a*) For normal operations, transfer auxiliary range shift lever will be in rearward or "HIGH" position (fig. 4). In this position, vehicle may be operated as two-wheel or four-wheel drive.

(*b*) To shift transfer to "LOW"-range position, move righth and transfer shift lever *forward*, and front axle drive shift lever rearward to engage front axle.

(*c*) Whenever possible, shift to "LOW"-range position with vehicle halted. When shifting from "LOW" to "HIGH" transfer speeds, and reversely, declutch to facilitate gear engagement. "Double-clutching" may be necessary (*b* above).

(*d*) To shift, transfer to "HIGH"-range position, move right hand transfer shift lever *rearward*. Independent selection of axle drive may be made as desired.

d. Stopping the Vehicle.

(1) Move foot from accelerator and apply brakes by depressing brake pedal.

(2) When vehicle speed has been reduced to engine idle speed, depress clutch pedal and move transmission shift lever to "N" (neutral) position (fig. 4).

(3) When vehicle is stopped completely, apply parking (hand) brake and release clutch and brake pedals.

e. Reversing the Vehicle.

(1) Bring vehicle to a *complete* stop.

(2) Depress clutch and move transmission shift lever to the left and forward into "R" (reverse) position.

(3) Release clutch pedal slowly and accelerate as load is picked up.

f. Stopping the Engine. To stop the engine turn the ignition switch lever counterclockwise to off position.

26. Towing the Vehicle

a. Starting the Vehicle by Towing. Place transfer auxiliary range lever of towed vehicle in "HIGH" and front axle drive lever in "OUT" positions. Depress clutch pedal and engage transmission in high (3d) speed. Turn ignition switch on, pull out choke control (if engine is cold), pull out throttle control about 1 inch, release parking (hand) brake, and tow vehicle. After vehicle is under way, release clutch pedal slowly. As engine starts, regulate choke and throttle controls and disengage clutch. Exercise care not to overrun the towing vehicle or towing line.

b. Towing a Disabled Vehicle. When towing a disabled vehicle exercise care so that no further damage will occur.

(1) *Towing with all wheels on the ground.*

(*a*) If transfer is not damaged, shift transmission and transfer into neutral positions and proceed as outlined in (*c*) and (*d*) below.

(*b*) If transfer is damaged, disconnect both propeller shafts at the front and rear axles by removing the universal joint U-bolts, being careful not to lose the bearing races and rollers. Securely fasten the shafts to the frame with wire, or remove dust cap and pull apart at the splines. Take care in placing all parts in a safe place to prevent loss.

(*c*) If the front axle differential or propeller shaft is damaged, remove front axle shaft driving flanges. Place front axle drive lever in "OUT" position and vehicle may be driven under its own power.

(*d*) If the rear axle differential is damaged, remove the rear axle shafts; remove rear propeller shaft at rear universal joint U-bolts and front universal joint snap rings in forward flange, then drive out bearing cups. Place front axle drive shift lever in "IN" position. This will allow vehicle to be driven under its own power.

(*e*) If only rear propeller shaft is damaged, remove as described in (*d*) above.

(2) *Towing vehicle with front or rear wheels off the ground.* If towing of vehicle is to be done in this manner, be sure that

the transfer auxiliary range lever is in "N" (neutral) position and the front axle drive shift lever is in the "OUT" (disengaged) position.

Section IV. OPERATION UNDER UNUSUAL CONDITIONS

27. General Conditions

a. In addition to the normal operating procedures described for usual conditions, special instructions for operating and servicing the vehicle under unusual conditions are contained herein. In addition to the normal preventive maintenance service, special care in cleaning and lubrication must be observed where extremes of temperature, humidity, and terrain conditions are present or anticipated. Proper cleaning, lubrication, and storage and handling of fuels and lubricants not only insure proper operation and functioning but also guard against excessive wear of the working parts and deterioration of the material.

b. These instructions are intended to augment information contained in lubrication orders. Information contained herein applies at extreme temperatures of 130° and −65° F. Instructions for cooling systems in extreme cold apply for temperatures below 32° F.

28. Extreme Cold Weather Conditions

a General Problems.

(1) The efficiency of vehicle crews and maintenance personnel is considerably reduced by the bulk and clumsiness of the clothing they must wear in extreme cold. As it is impossible to handle cold metal with bare hands, some form of mitten or glove or combinations thereof must be worn at all times. The resulting loss of the sense of touch further reduces the efficiency of personnel.

(2) As each operation may be classed as an emergent effort, operators are selected and trained to be more than just operators. They must be able to *anticipate* conditions insofar as is humanly possible and properly *diagnose* symptoms of potential failures quickly and accurately.

(3) Extensive preparation of material is necessary when it is known that it is to operate in extreme cold weather. Generally, extreme cold will cause lubricants to thicken or congeal, freeze batteries or prevent them from furnishing sufficient current for cold weather starting, crack insulation and cause electrical short circuits, prevent fuels from vaporizing and properly combining with air to form a combustible mixture for starting, and will cause the various construction materials to become hard, brittle, and easily damaged or broken.

(4) No change in instructions or materials will be made for the operation of the material when a *temporary* rise in tempera-

ture is encountered. Lubricant levels and lubricant points, however, will be closely observed and proper steps taken to replenish lubricants, when required. Instructions in present Department of the Army lubrication orders will apply when a definite change to higher temperatures not only is anticipated but is expected to be of long duration.

(5) For detailed descriptions of operations in extreme cold, see FM 70–15.

b. WINTERIZATION EQUIPMENT.

(1) *General.* Special equipment is provided for the vehicle when protection against extreme cold weather is required. This equipment is issued as kits, described below. Each kit contains a description of installation instructions, and methods of use. See also TM 9–2855.

(2) *Personnel heater kit.* This kit is installed when ambient air temperatures only as low as —20° F. are anticipated. It provides an adjustable canvas "winterfront" cover over the front of the radiator, and an electrically driven, gasoline-burning heat, with blower, to heat the crew compartment when inclosed in a hard-top closure furnished in the hard-top closure kit ((3) below).

(3) *Hard-top closure.* A hard-top closure is provided to entirely enclose the body of the vehicle for protection of the crew. All-around vision is provided by a glazed door and window at each side, and a rear window. The closure may be readily removed and knocked-down for storage at seasonal changes.

(4) *Arctic winterization kit.* This kit is installed on vehicles already equipped with personnel heater and hard-top closure kits, in zones where temperatures range from —20° to —65° F. This kit provides an electrically driven, gasoline-burning power plant heater which heats and circulates the coolant of the engine cooling system, and a slave receptacle to allow introduction of current from outside source, such as the cold starting aid kit. This heater is designed to function during overnight halts. The battery boxes or compartment is further insulated against the cold, the engine hood is padded, and a 180° F. thermostat is substituted in the cooling system for the 150° F. thermostat. Current introduced through slave receptable is used for charging the batteries or the boosting of current required to start the engine in extreme cold weather.

(5) *Arctic kit.* This kit is composed of the three kits described in (2), (3), and (4) above, issued as a single unit, when all three are required.

c. Fuels and Lubricants (Handling and Storage).

(1) The operation of equipment at arctic temperatures will depend to a great extent upon the condition of the fuels and lubricants used in the equipment.

(2) The manner in which the fuels and lubricants are stored, handled, and used greatly affects the service the fuels and lubricants will give.

(3) In arctic operations, contamination with moisture is the source of many difficulties. Moisture can be the result of snow getting into the product, condensation due to "breathing" of a partially filled container, or moisture condensed from warm air in a partially filled container when a product is brought outdoors from room temperatures. Other impurities will also contaminate fuels and lubricants so that their usefulness is impaired.

(4) Immediate effects of careless handling of fuels and lubricants are not always apparent, but any deviation from proper handling of these products is likely to bring trouble at the least expected time.

(5) Refer to TB ORD 126 for handling and storage instructions.

29. Extreme Cold Weather Operation

a. Operating the Vehicle.

(1) The mechanical steps in operating the vehicle generally are the same as in operation under moderate temperature conditions, chapter 2. Constantly note instrument readings. The special engine thermostat provided in the Arctic winterization kit opens at 180° F. and, at this temperature, the engine will give best results. If temperature gage readings consistently exceed 200° F., adjust flap of radiator winter-front cover to admit more air. If this does not remedy the situation, stop the vehicle and investigate the cause.

(2) Refer to paragraph 243 for initial preparation of vehicle for extreme cold operation.

(3) The driver must be very cautious when placing the vehicle in motion after a shutdown. Congealed lubricants may cause failure of parts. Tires frozen to the ground or frozen to shape while under-inflated must be considered. One or more brake shoes may be frozen fast and require preheating to avoid damage to the mating surfaces.

(4) For operating the vehicle over snow and ice, see paragraph 5.

b. Shutting Down at Halts.

(1) For long periods of shutdown, as in bivouac, park vehicle in a place as sheltered as possible. For short shutdown periods,

the vehicle should be parked in a sheltered spot out of the wind. If no shelter is available, it will be helpful to park so that the vehicle does not face into the wind.

(2) When preparing a vehicle for shutdown period, place transmission in neutral and transfer shift levers in the rearward position. This will place these units in readiness for the next start by preventing them from possible freezing in an engaged position. Freezing may occur when water is present due to condensation.

(3) Clean all parts of the vehicle of snow, ice, and mud as soon as possible after operation. Particular care should be taken to remove collections of ice and snow from the radiator core, spark plugs, distributor and coil, steering knuckles and arms, brake cylinder boots, crankcase, breather, and electrical connections. Carefully remove large collections of ice and caked snow under fenders where suspended on wiring conduits and brake hoses. Insofar as possible, protect all vital parts against entrance of loose, drifting snow during the halt.

(4) Provision must be made to insure fluidity of lubricants for the next start. If no power plant heating device is present, the engine oil may be drained and stored in a warm place.

Note. Tag vehicle in a conspicuous place to warn against starting engine with oil drained.

(5) When the vehicle is equipped with a power plant heater, as provided by the Arctic winterization kit, start the heater and check to be sure that it is operating effectively. This heater should avoid the necessity of removing the battery to warm storage, and is designed to operate unattended during overnight stops. Instructions for the installation, operation, and maintenance of winterization kits will be found in pamphlets accompanying the kits when issued.

(6) Refuel as directed in paragraph 28*c* in order to prevent condensation in the fuel tanks.

(7) Care must be exercised when covering and shielding the vehicle with canvas paulins to make sure that the canvas is not allowed to rest on the ground. It is quite probable that the canvas will freeze to the ground under certain wet cold, snow conditions.

c. PARKING.

(1) Tires will freeze to the ground when a vehicle is parked for even a short period in mud, water, or wet snow, and will cause damage to the engine clutch or the tire casings if not properly cared for prior to moving the vehicle.

(2) Whenever possible, vehicles should be parked on high, dry ground; otherwise, a footing of planks or brush will suffice.

Chock in place when brakes are released and gear shift levers are in neutral.

(3) Adjust tire pressures (par. 205).

30. Extreme Hot Weather Conditions

a. General. Operation in ambient temperatures from 32° F. to 90° F. is considered normal; however, the engine and other components may become dangerously hot before ambient temperature of 90° F. or higher is reached. Avoid the continuous use of low gear ratios, whenever possible. Operators continuously must watch the temperature and halt for a cooling-off period, whenever necessary and the tactical situation permits. Perform frequent inspections and servicing of cooling system, oil filter, and air cleaner.

b. Hot, Dry Climates.

(1) Keep cooling system full of clean water and maintain proper level of correct grade of lubricating oil in lubrication system. Check engine temperature frequently and, if temperature consistently rises above 200° F., stop engine and inspect cooling system as soon as possible. Flush cooling system, if necessary (par. 244); look for dust, sand, or insects in radiator fins. Blow out with compressed air or water under pressure.

(2) If possible, place vehicle under cover to protect it from sun, sand, and dust. Cover inactive vehicles with paulins, if no suitable shelter is available. Shield the tires from the direct heat and light rays of the sun, whenever possible.

(3) A careful watch must be kept for evidence of the presence of moths and termites.

(4) For operation in dust and sand, see paragraph 31.

c. Hot, Damp Climates (High Humidity).

(1) Keep cooling system clean and filled with clean, fresh (not salt) water. Use soft water, when possible. Frequently note engine temperature, as registered by heat indicator. Stop vehicle, immediately, if temperature of engine reaches 212° F., and allow engine to cool. If consistently above 200° F., stop engine and inspect for cause.

(2) Corrosive action on all parts of the vehicle will occur in areas of high humidity and during the rainy season. Evidences will appear in the form of rust and paint blisters on metal surfaces, and mildew or mold on fabrics, leather, and unpainted wooden surfaces.

(3) Protect exterior surfaces from atmosphere by touch-up painting and by keeping a film of engine lubricating oil (SAE–10) on unfinished exposed metal surfaces. Cables

and terminals will be protected by ignition insulation compound.

(4) Make frequent inspections of idle, inactive vehicles. Remove corrosion from exterior surfaces with abrasive paper or cloth and apply a protective coating of paint, oil, or suitable rust preventive compound.

(5) Do not park the vehicles in the sun for long periods, as the heat and sunlight will shorten the life of the tires.

31. Unusual Terrain Conditions

a. Mud.

(1) Vehicle operation in deep mud requires the use of tire chains, preferably on all driving wheels. Tire chains are installed in pairs (front and rear) to save differential wear. Select a gear ratio low enough to move vehicle steadily and without imposing undue driving strain on engine and axles. However, racing of the engine for extended periods must be avoided. Use front axle drive and tire chains at once if depth of mud warrants. If good traction is assured use "low-range" transfer speed and suitable transmission speed. (This requires front-wheel drive.) Return transfer to "high-range" as soon as vehicle speed is adapted to independent transmission speed ratios. Front-wheel drive may be left engaged for traction over slippery mud surfaces, but should be disengaged as soon as hard surfaces are met.

Note. Avoid excessive clutch slippage.

(2) Operators must, at all times, know the position in which the front wheels are steered, as on liquid mud surfaces the vehicle will travel straight ahead while the road wheels are cramped right or left. A piece of string tied to the front portion of the steering wheel rim in "straight-ahead" position will indicate to the driver whether or not the front wheels are "ploughing." This ploughing action will cause the vehicle to stall, or suddenly veer to right or left.

(3) If vehicle is halted in mud, start in lowest speed possible and increase vehicle speed, gradually, if at all. Avoid sudden acceleration or "racing" of the engine, or attempts to shift gears while traversing deep mud. If one or more wheels become mired and others spin, winch or tow by companion vehicle, or jack up the wheel which is spinning and insert planking or matting beneath it. Do not jam sticks and stones under a spinning wheel, as this only forms an effective block and will wear the tire tread unnecessarily.

(4) A slight reduction in tire pressure is desirable when the additional ground contact will increase traction. Under this

condition, careful watch must be kept to avoid tire bruises due to submerged rocks.

(5) Mud-beach landings generally are similar to beach-type sand landing operations. Prevailing conditions will determine whether successive vehicles will "track" the first vehicle to cross the muddy terrain or pioneer individual courses.

(6) Thorough cleaning and lubrication of all parts affected must be accomplished as soon as possible after operation in mud, particularly when a sea of liquid mud has been traversed. Clean out radiator cells and interior of engine compartment. Repack wheel bearings, if necessary. Remove chains as soon as their use is no longer required. Clean, oil, and stow chains in vehicle.

(7) In cases of towed loads, vehicles may "double-up" for the crossing or the load may be hauled across by cable after the vehicle has arrived on hard ground.

(8) Refer to directions for fording operations, paragraph 33.

b. Snow and Ice.

(1) *Snow.*

(*a*) Vehicle operation in deep snow is similar to operation in mud. Steering control will be especially unreliable and spinning of one or more wheels will be likely (*a* above). Steady movement, without the momentary halts necessary for gear changes, is desirable. Decision to track preceding vehicles or to form a new trail must be made by the driver, in specific instances. Care must be exercised that spinning wheels of a *halted* vehicle do not bury sufficiently to cause the vehicle axle housings to rest on snow. When this occurs, the vehicle must be towed off or laboriously jacked and shoveled free. Chains on all wheels, with or without front-wheel drive, will assure steering control on slippery crowned roads. Watch for "ploughing" by front wheels unknowingly steered right or left. (See *a*(2) above, for indicator.)

(*b*) A covering of light snow, by concealing patches of ice, provides a skidding hazard on hard roads. Flurries of light snow entering the engine compartment may enter the crankcase filler vent.

(2) *Ice and sleet.*

(*a*) Skidding and loss of steering and torque traction are the chief difficulties encountered in operations over icy roads. Instructions for slippery mud surfaces and the use of chains described in *a* above, will apply equally under these conditions. When rear end skidding occurs, instantly turn the front wheels in the same direction that the rear end is skidding. Decelerate the engine. Do not declutch. Apply

brakes very gradually, if at all, and when the skid movement has ceased, steer the wheels back to direction desired. Remember that brakes are applied equally on all four wheels, and that this has a direct influence on, and may create, a front end skid. Proceed with caution, particularly when on a crowned road, on curves, down grades, and when no barriers exist at sides of road for emergency ditching of vehicle.

(*b*) Sleet storms will form ice on the windshield, necessitating the use of windshield wipers and defrosters. Movement should be at reduced speed during this condition, due to poor visibility and the possibility of danger from low-hanging, ice-coated tree limbs or fallen trees, rocks, and obstructions at blind curves. Rear vision by rear window or mirror will be lost.

c. SAND.

(1) *General.* Sand presents several problems in the efficient operation of vehicles. When blown in clouds, it has an abrasive effect capable of permanently "frosting" windshield and door glasses and blasting away paint, and it will introduce itself into the engine and into minute crevices where it mixes with lubricants to form a perfect abrasive. In beach sand, salt in appreciable quantities is mixed with the sand with additional corrosive results. Air cleaners and fuel filters must be cleaned at least daily. Oil filter handle will be reciprocated at each halt. Engine and other exposed vents should be covered with cloth. Traction on beach or desert sand surfaces requires skill obtained only by actual experience. See FM 31–25.

(2) *Desert type.* Desert sands usually are dry, either loosely-collected dunes or lightly crusted surfaces. It is generally conceded that drivers experienced in ordinary vehicle operation need about 1,000 miles of desert training before being qualified as skilled desert drivers. Overheating, excessive wear of power train components and tires, electrical difficulties, improper, unbalanced loading, and driver fatigue are some of the difficulties met in the desert. Tires without combat or mud and snow type treads are an advantage, as they will not cut through the upper sand crust as readily. The main objective is to keep the wheels from spinning or breaking through the crust. All-wheel drive is safest. Laying a track of planks, canvas, or brush will insure travel with least chance of break-through and consequent laboring and overheating of engine.

(3) *Beach type.*

(a) Deflate tires to 50% of recommended normal pressures

(par. 205) before fording to increase underwater traction upon contact and the initial wet beach surfaces. Readjust tire pressure to suit subsequent operation.

(b) Towed loads may be detached and hauled to hard ground independently.

d. DUST.

(1) Clouds of dust raised by moving vehicles and carried by winds are similar in effect to sand storms (*c*, above). Dust will penetrate into crevices between moving parts and, mixed with lubricant, will form an abrasive that soon will wear the parts to the point of unserviceability.

(2) Air cleaners and fuel filters must be cleaned, at least, daily. Oil filter handle will be reciprocated at each halt. Engine and other exposed vents and breathers should be covered with cloth.

e. AFTER OPERATION PROCEDURES.

(1) Clean all parts of the vehicle of snow, ice, mud, dust, and sand as soon as possible after operation. Particular care should be taken to remove collections of ice, snow, and mud from the radiator core, engine components, steering knuckles and arms, brake cylinder boots and hoses, crankcase breather, and electrical connections. Carefully remove large collections of ice and caked mud under fenders where suspended on wiring conduits and brake hoses. If wheel bearings have been submerged in water during the operation, remove wheels and repack wheel bearings. See paragraph 33*g* for operations after fording.

(2) For cleaning, preserving, and painting, see TM 9–850 and TM 9–2851.

32. High Altitude Conditions

a. At high altitudes, coolant in vehicles boils at proportionately lower points than 212° F., thus, it will be necessary to keep a close watch on the engine temperature during the summer months.

b. When extreme cold conditions are encountered at high altitude, the instructions given herein for extreme cold weather and unusual terrain conditions will govern.

33. Fording Operations

a. GENERAL.

(1) Instructions for crossing bodies of water consider all depths from a few inches, involving fresh and salt water splash and over-hub depths, to complete submersion. Within this

range are spray splashing, normal fording capabilities, deep water fording, when equipped with fording kits, and accidental complete submersion.

(2) Upon entering the water, operators must pay particular attention to avoid possible damage caused by the sudden cooling of parts of the engine which are at operating temperatures. The engine must be operating at maximum efficiency before submerging the vehicle. Brake cylinders must be filled to maximum level to reduce the entrance of water.

(3) All normal fording should be at speeds of from 3 to 4 miles per hour to avoid forming a "bow-wave." When vehicle speed is uniformly sustained, the bow-wave may be of a height above the maximum fording depth for the vehicle as the front end construction causes a slight pocket at front of engine below radiator. However, this bow-wave will form V-shaped waves which will strike the *sides* of engine compartments on *following* vehicles, causing them to foul and stall. Keep at sufficient distance from other vehicles to avoid these waves.

(4) Avoid using the clutch, if possible, because frequent use while submerged may cause the clutch to slip. The brakes usually will be "lost" but in some cases may "grab" after emergence. Applying the brakes a few times will help dry out the brake linings after dry land has been reached.

(5) Operation under water often is in rather soft sand or mud, with occasional large rocks, stumps, or other obstructions. These, combined with the resistance of the water, generally make it inadvisable to use other than "low-low" speed. Shift transmission and transfer into lowest speed positions. This will engage front-wheel drive. Speed up engine to overcome the possibility of a "stall" when the cold water chills the engine. Do not attempt to shift gears while under water. Should the engine stall while submerged, it may be started in the usual manner.

(6) When towing the ¼-ton amphibious trailer, the trailer will float when sufficiently submerged. Towing of loaded trailer in water beyond the depth of the pintle must be done with a short cable, otherwise the trailer will dip and sink. If a current is present as in a stream or tidal motion, the trailer will pivot about the pintle and "jack-knife." Damage may result from hard contact between vehicle bodies and the trailer may list sufficiently to fill and capsize. Improvised rope ties will eliminate this danger.

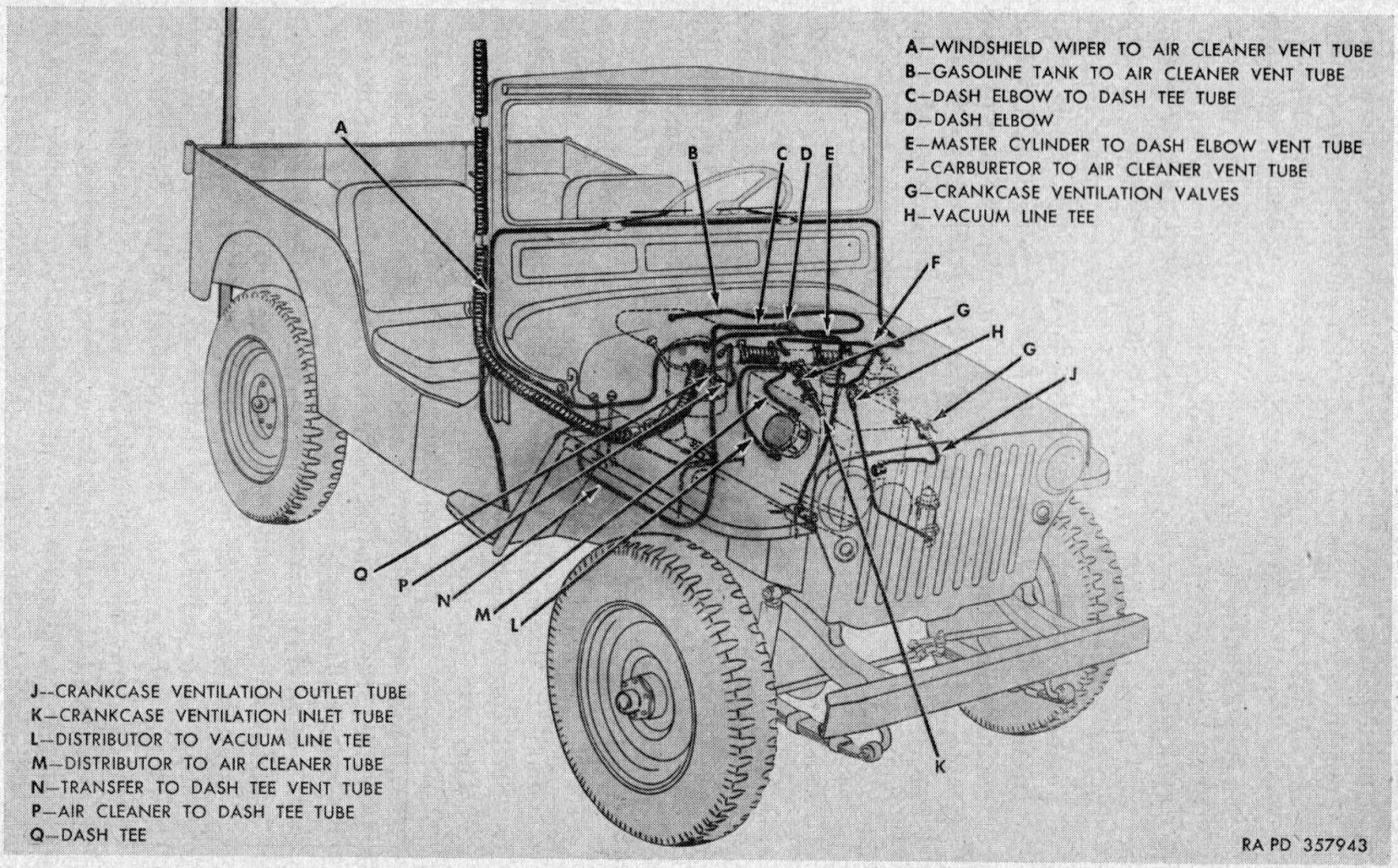

Figure 7. Ventilation of units for deep water fording.

b. Description of Underwater Ventilation System (fig. 7).

(1) Operation of the vehicle underwater is made possible by the sealing, at time of manufacture, of all parts or assemblies which are affected immediately by the entrance of water. Watertight housings are provided as standard equipment for all instruments, switches, starter, generator, regulator, battery vents, ignition filter, and distributor, including cables. The majority of these parts require venting to atmospheric pressure either to operate or to prevent damage due to condensation. A series of ventilating tubes, which are shown in figure 7, are provided for this purpose.

(2) The carburetor float chamber is vented to the air horn by an internal passage and is extended to the air cleaner tube by an external tube, F.

(3) The brake master cylinder is vented through tube E which extends up between the foot pedals to elbow D, mounted on the dash, and tube C to dash tee Q and tube P to air cleaner.

(4) The fuel tank is vented through tube B which connects to the air cleaner.

(5) The transmission and transfer are vented through tube N connected to the top of the transfer to the air cleaner through tubes Q and P.

(6) Positive circulation of air through the distributor housing is assured through connecting tubes L and M. One tube from the air cleaner, L, provides an air intake for the venting; the other, M, is connected to tee H in the windshield wiper vacuum line. This vacuum connection provides positive ventilation and will draw off any water which might possibly enter or collect in the distributor. The elbow used as a connector at the windshield wiper vacuum tube end is connected to the tube leading to the distributor.

(7) The standard crankcase oil filler tube is used to ventilate the engine. Air circulates from the air cleaner tube into the oil filler tube and crankcase through tube K. Circulation is completed through another tube J and a control valve mounted in the intake manifold. Shut-off valves G which are operated from the instrument panel are provided to block-off the system when the vehicle is submerged. This causes a pressure to build up in the crankcase, thus preventing the entrance of water.

c. Normal Fording.

(1) Fording of bodies of water at calculated maximum vehicle fording depth, as given under characteristics herein (30 in.), is based on the standard vehicle with special protection provided for critical units, but *without* the air-intake and exhaust extension tubes. This depth is based on slow and

considered movement of the vehicle through the water, without excessive fan spray, with crankcase and oil filler valves closed, and a minimum of waves. This type of fording usually will be stream crossings and landing will be on grassy soil and mud. Beach landings from landing craft may be accomplished when maximum fording depth is not exceeded.

(2) Do not exceed the known fording limits of the vehicle. Engage front-wheel drive, transfer low-range drive, and transmission low gear prior to entering the water. Close control valve for crankcase oil filler tube. Proceed steadily and with caution at about 3 to 4 miles per hour, particularly, when the ground formation under the water is not known. A slippery rock may tilt the vehicle sufficiently to introduce water into the air intake while a deep pocket may cause the engine to be submerged completely.

d. Deep Water Fording.

(1) Refer to TM 9–2853 for general information, descriptions and methods of use of deep water fording kits, and for general procedures for the operation of vehicles so equipped.

(2) In addition to the waterproofing and venting of most of the engine, electrical, and vehicle units for satisfactory operation under specified depths of water for normal fording (*b*, above) further venting of air intake and exhaust outlet must be made for fording bodies of deep water.

(3) Deep water fording extension tubes are provided for the vehicle for this purpose. They comprise a flexible tube for carburetor air intake and an exhaust pipe extension for outlet of engine exhaust gases.

(4) The main vent for all vented units and the carburetor air intake is by means of a flexible tube clipped to a support which is attached at the right cowl panel, to the right side, and independent of, the windshield frame. This tube is attached to the waterproof air cleaner, and extends to the carburetor air horn.

(5) The exhaust pipe extension tube is attached to the muffler tail pipe and attaches to the rear corner of the body on the right side.

(6) Depths to within a few inches of the air intake and exhaust outlet openings thus are negotiable; however, great care must be exercised that the openings do not become submerged by sudden increase in depth, by waves, or other sources.

e. Salt Water Fording. In order to prevent rapid corrosion or rust on exposed metal parts subjected to salt water spray or immersion, and which are not protected by paint or otherwise, it is important to

remove salt deposits and water from every part of the vehicle and clean all the exposed unpainted parts with cloths or other means, at the earliest possible moment consistent with the situation. Thoroughly clean, dry, and coat all such parts with ignition insulation compound or by touch-up painting. In the case of assemblies which have to be disassembled for cleaning, perform these operations as soon as the situation permits or refer to ordnance maintenance unit. Regardless of the temporary measures taken, if the vehicle has been immersed in salt water, it must be delivered as soon as practicable to the ordnance maintenance unit for disassembly, cleaning, repair, and permanent protection.

f. SUBMERSION. When a vehicle has forded beyond its maximum depth and the engine has fouled out, it must be towed out as soon as possible so that water will enter as few parts as possible. When the tactical situation permits and complete submersion is possible, due to inability to study the crossing site, it is advisable to attach a short cable to the vehicle before it enters the water. This will avoid subsequent diving operations and materially assist and hasten immediate salvage operations. The vehicle will be sent to the ordnance maintenance unit as soon as recovered. This applies also to accidental submersion of the vehicle.

g. AFTER FORDING OPERATIONS.

(1) Immediately after a vehicle emerges from the water, push in the valve control handle mounted on the instrument panel, to allow the crankcase ventilating system to operate normally and relieve crankcase pressure. Open all drain holes in body. Also, at the earliest opportunity, check the engine oil level and check the crankcase for presence of water. After checking the engine oil, operate the vehicle at normal road speeds 30 minutes or longer to prevent subsequent rusting and assure future normal clutch and brake operation. Heat generated by driving will evaporate or force out most water which has entered at various points. Also, any *small* amount of water which has entered the crankcase, either through leakage or due to condensation, usually will be dissipated by the ventilating system.

(2) If vehicle has been in the water for any appreciable length of time, or completely submerged, precautions must be taken as soon as practicable to halt deterioration and avoid damage to engine, clutch, universal joints, steering gear, battery, instruments, brakes, and wheel bearings.

(3) Clean carburetor bowl, fuel strainer, pump, filter, tank, and lines as found necessary after inspection. If water is found in the air cleaner, clean and change the oil.

(4) Remove distributor housing drain plug and thoroughly dry interior. Remove plug in starter housing at overrunning

clutch and allow accumulated water to drain out. Restore plugs.

(5) Check batteries by hydrometer test and for height of liquid. This is of special importance after salt water immersion.

(6) Check all electrical connections for corrosion, particularly the bayonet-type connectors used in the various circuits.

(7) Refer to paragraph 249 for maintenance operations after fording.

CHAPTER 3

ORGANIZATIONAL MAINTENANCE INSTRUCTIONS

Section I. PARTS, SPECIAL TOOLS, AND EQUIPMENT FOR ORGANIZATIONAL MAINTENANCE

34. Parts, Tools, and Equipment

a. General. Tools and equipment are issued to the using organization for maintaining the matériel. Tools and equipment should not be used for purposes other than prescribed and, when not in use, should be properly stored in the chest and/or roll provided for them. Spare parts are supplied to the using organization for replacement of those parts likely to become worn, broken, or otherwise unserviceable when such operations are within the scope of organizational maintenance functions. Spare parts, tools, and equipment supplied for the ¼-ton 4 x 4 utility truck M38 are listed in Department of the Army Supply Catalog ORD 7 SNL G–740, which is the authority for requisitioning replacements.

b. Common Tools and Equipment. Standard and commonly used tools and equipment having general application to this matériel are listed in the ORD 7 catalog, but are not specifically identified in this manual.

35. Special Tools and Equipment

Certain tools and equipment specially designed for organizational maintenance, repair, and general use with the matériel are listed in table I for information only. This list is not to be used for requisitioning replacements.

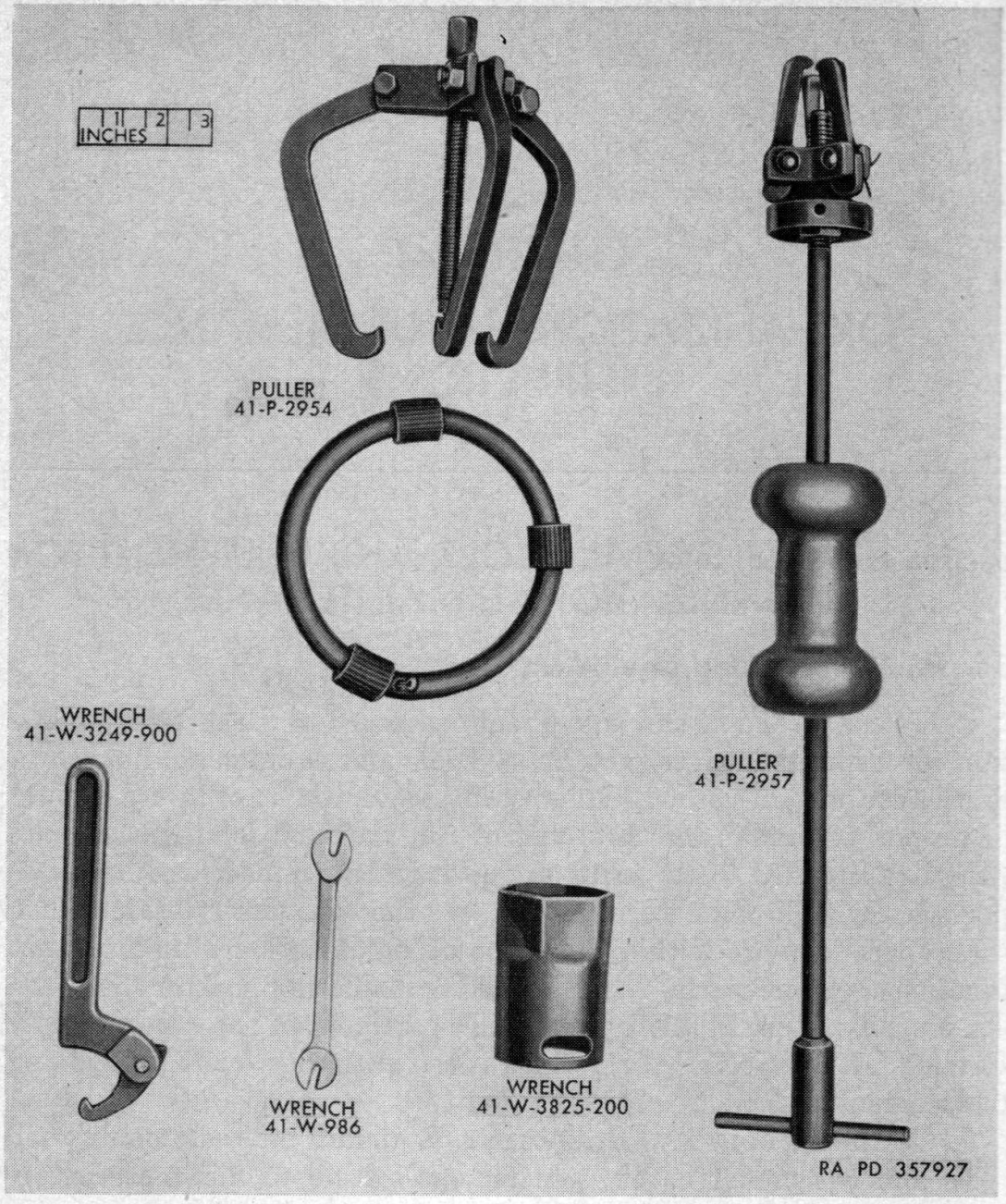

Figure 8. Special tools.

Table I. Special Tools and Equipment for Organizational Maintenance

Item	Identifying number	References		Use
		Fig.	Par.	
ADAPTER, puller, steering wheel.	41–A–18–251	------	------	
PULLER	41–P–2954	8, 55	191*a*	Remove steering wheel (Use w/ADAPTER 41–A–18–251).
PULLER, universal	41–P–2957	8, 42	158*a*	Remove front wheel flange.
REMOVER and REPLACER, spindle pin brg cup.	7083344	------	------	
REMOVER and REPLACER, wheel brg cup.	7083346	------	------	
SCREW, remover and replacer, brg cup.	7083341	------	------	
SCREW, remover and replacer, brg cup.	7083216	------	------	
WRENCH, engrs, angle 15 deg, dble open end, alloy-S, size of opngs 3/16 and 1/4 in.	41–W–986	8, 46	178*a*	Brake adjustment.
WRENCH, spanner	41–W–3249–900	8, 37	144*b*	Remove coupling nut.
WRENCH, wheel brg nut, sgle-end tubular, hex size of opng 2 1/8 in, lgh 3.56 in.	41–W–3825–200	8, 43	158*a*	Remove wheel bearing retaining nut.

Section II. LUBRICATION AND PAINTING

36. Lubrication Order

The lubrication order (fig. 9) prescribes cleaning and lubricating procedures as to location, interval, and proper materials for this vehicle. This order is issued with each vehicle and should be carried on the vehicle at all times.

37. General Lubrication Instructions

a. Usual Conditions. Service intervals specified on the lubrication order are for normal operation and where moderate temperature, humidity, and atmospheric conditions prevail.

b. Lubrication Equipment. Each vehicle is supplied with lubrication equipment adequate for its maintenance. This equipment will be cleaned both before and after use. Lubricating guns will be operated carefully, and in such a manner as to insure a proper distribution of the lubricant.

c. Points of Application.

(1) Lubrication fittings, grease cups, oilers, and oil holes are shown in figures 10 to 13 and are referenced to the lubrication order. Wipe these devices and the surrounding surfaces clean before lubricant is applied.

(2) A three-fourths-inch red circle should be painted around all lubricating fittings and oil holes.

d. Reports and Records.

(1) Report unsatisfactory performance of matériel or defects in the application or effect of prescribed petroleum fuels, lubricants, and preserving materials using DA AGO Form 468.

(2) Maintain a record of lubrication of the vehicle on DA AGO Form 460.

38. Lubrication Under Unusual Conditions

a. General.

(1) Lubricants are prescribed in the lubrication order in accordance with three ranges of temperature—above 32° F., from 40° to −10° F., from 0° to −65° F. Service intervals given are for normal operation.

(2) When to change grades of lubricants and/or service intervals is determined by maintaining a close check on operation of the vehicle and its components during the approach to changeover periods in accordance with weather forecast data.

(3) Ordinarily, it will be necessary to change grades of lubricants and service intervals only when ambient temperatures are consistently in the next higher or lower range. Extreme conditions of prolonged periods of high-speed operation; con-

tinued operation in hot or cold areas, sand, dust, or snow; immersion in water or exposure to moisture, any of which may quickly destroy the protective qualities of the lubricant, are individually described herein (pars. 29, 30, 31, and 33).

b. Extreme Cold Weather.

(1) *Lubricants.* Refer to TB ORD 126 for information on grades of lubricants to be used and detailed information on extreme cold weather lubrication.

(2) *Warming of lubricants.* If the vehicle has not been equipped with winterization equipment, and when no warm air blower (slave kit) is available, one of the following methods may be used to warm the crankcase oil to proper consistency for correct lubrication. Preference should be given to the different methods in the order listed, according to the facilities available. See par. 29 for starting of engine.

(*a*) Keep vehicle in a warmed enclosure or sheltered when not in use.

(*b*) When engine is stopped, drain crankcase oil while still hot and store in a warm place.

Note. When crankcase has been drained, tag the vehicle in a conspicuous place in the driver's compartment to warn personnel that the crankcase is empty.

(*c*) Heat oil, when necessary, only until it is readily pourable and warm enough to retain its fluidity in the crankcase. Do not overheat the oil.

c. Lubricating After Fording Operation.

(1) If the vehicle has been in deep water for a considerable length of time, or has been completely submerged, precautions must be taken as soon as practicable to avoid damage to the engine and other vehicle components, as follows:

(*a*) Perform a complete lubrication service (par. 36) to cleanse bearings of water or retained grit.

(*b*) Inspect engine crankcase oil. If water or sludge is found, drain the oil (par. 36) and flush the engine with preservative engine oil SAE–30 (PE–30).

(2) Operation in bodies of salt water enhances the possibility of rust and corrosion, especially on unpainted surfaces. It is most important to remove all traces of salt water and salt deposits from every part of the vehicle. For assemblies which have to be disassembled, dried, and relubricated, perform these operations as soon as the situation permits. Wheel bearings must be disassembled and repacked after each submersion. Regardless of the temporary measures taken, the vehicle must be delivered as soon as practicable to the ordnance maintenance unit.

LUBRICATION ORDER

TRUCK, ¼ TON, 4 x 4, M38 (WILLYS)

References: TM 9-804 ORD 7 SNL G-504

Intervals are based on normal operation. Reduce to compensate for abnormal operation and severe conditions. During inactive periods intervals may be extended commensurate with adequate preservation. Relubricate after washing or fording.

Clean fittings before lubricating.
Clean parts with SOLVENT, dry cleaning. Dry before lubricating.
Lubricate dotted arrow points on both sides of the equipment.

Lubricant • Interval

Interval • Lubricant

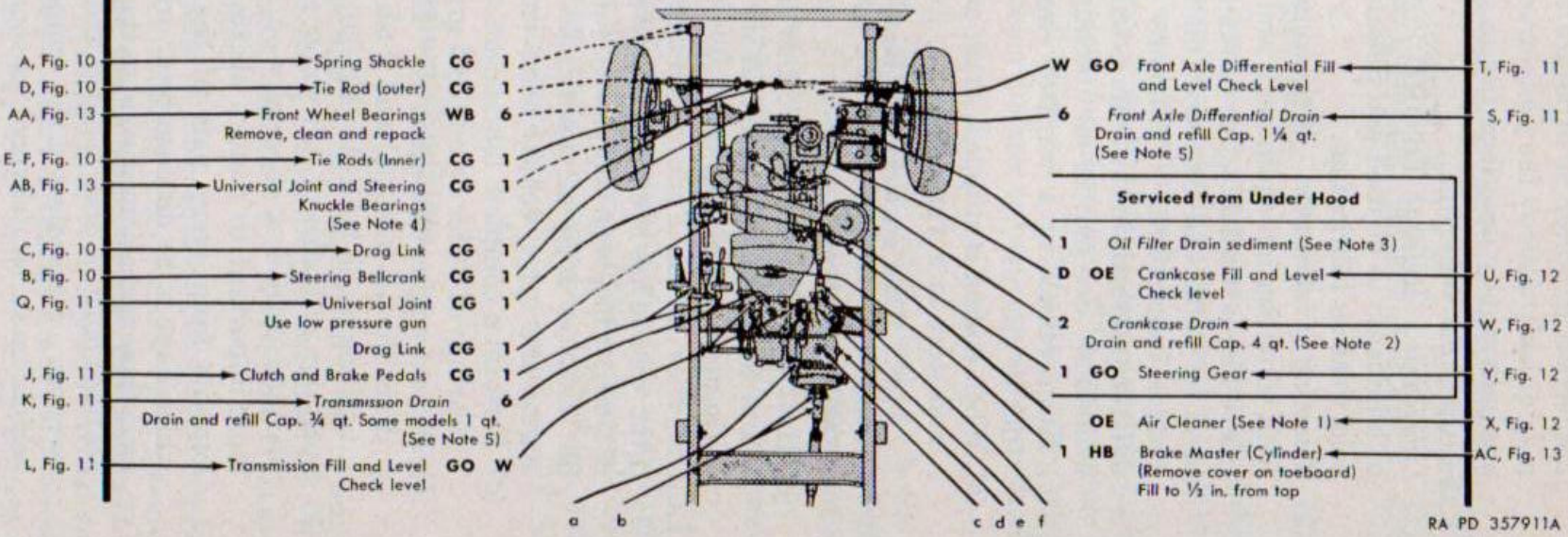

Figure 9. Lubrication order.

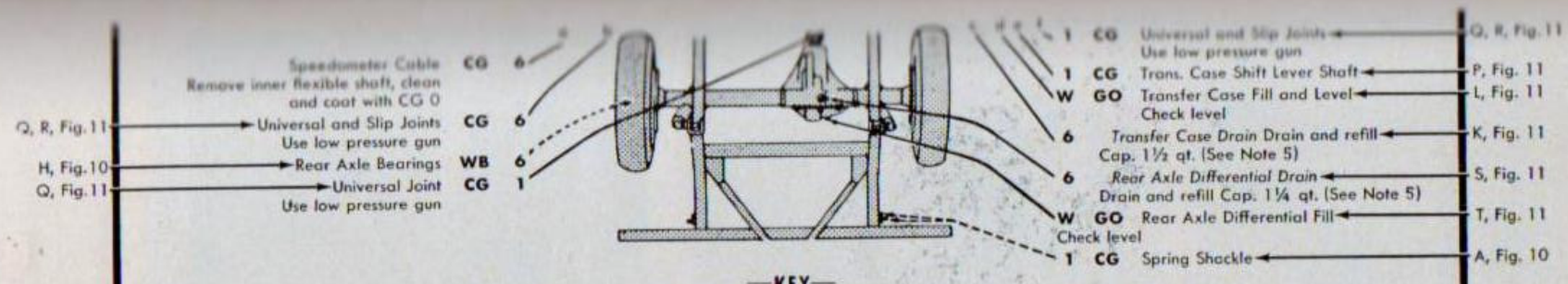

—KEY—

LUBRICANT	EXPECTED TEMPERATURES			INTERVALS
	Above +32° F	+40° F to −10° F	0° F to −65° F	
OE—OIL, engine				
Crankcase	OE-30	OE-10	OES	
Other points	OE-30	OE-10	PS	D—Daily
GO—LUBRICANT, gear, universal	GO-90	GO-90	GOS	W—Weekly
CG—GREASE, general purpose (see OG also)	CG-1	CG-0		1—1,000 Miles
OG—GREASE, lubr, Ord Dept, No. 00			OG-00	2—2,000 Miles
WB—GREASE, wheel bearing, No. 2				6—6,000 Miles
HB—FLUID, hydraulic brake				
PS—OIL, lubricating, preservative special				

—NOTES—

1. AIR CLEANER—(Oil Bath Type) After every 8 hours of operation, replenish to bead level with **OE**. (Use crankcase grade oil for the corresponding temperature.) Every 1,000 miles, disassemble, wash all parts, and refill with **OE** as above. For desert or similar sandy soil operation, disassemble, wash all parts and refill with **OE** as above every 4 hours or more frequently if required.
2. CRANKCASE—Drain only after operation. Refill to FULL mark on gage. Run engine a few minutes and recheck oil level. CAUTION: Be sure pressure gage indicates oil is circulating.
3. OIL FILTER—Every 6,000 miles, while crankcase is being drained, drain filter, clean inside of case.
4. UNIVERSAL JOINT AND STEERING KNUCKLE BEARINGS—Every 1,000 miles, remove plug at rear and add **CG** to level of filler plug hole. Every 6,000 miles, remove, clean, dry, inspect and refill to plug level. Do not overfill.
5. GEAR CASES—Fill to plug level before operation and after draining. Drain only after operation.
6. OIL CAN POINTS—Every 1,000 miles, lubricate all Carburetor, Clutch, Brake and Throttle Linkages, Pintle Hook with **OE**.
7. DO NOT LUBRICATE—Clutch Release Bearing, Water Pump, Fan, Shock Absorbers.

RA PD 357911B

Figure 9—Continued.

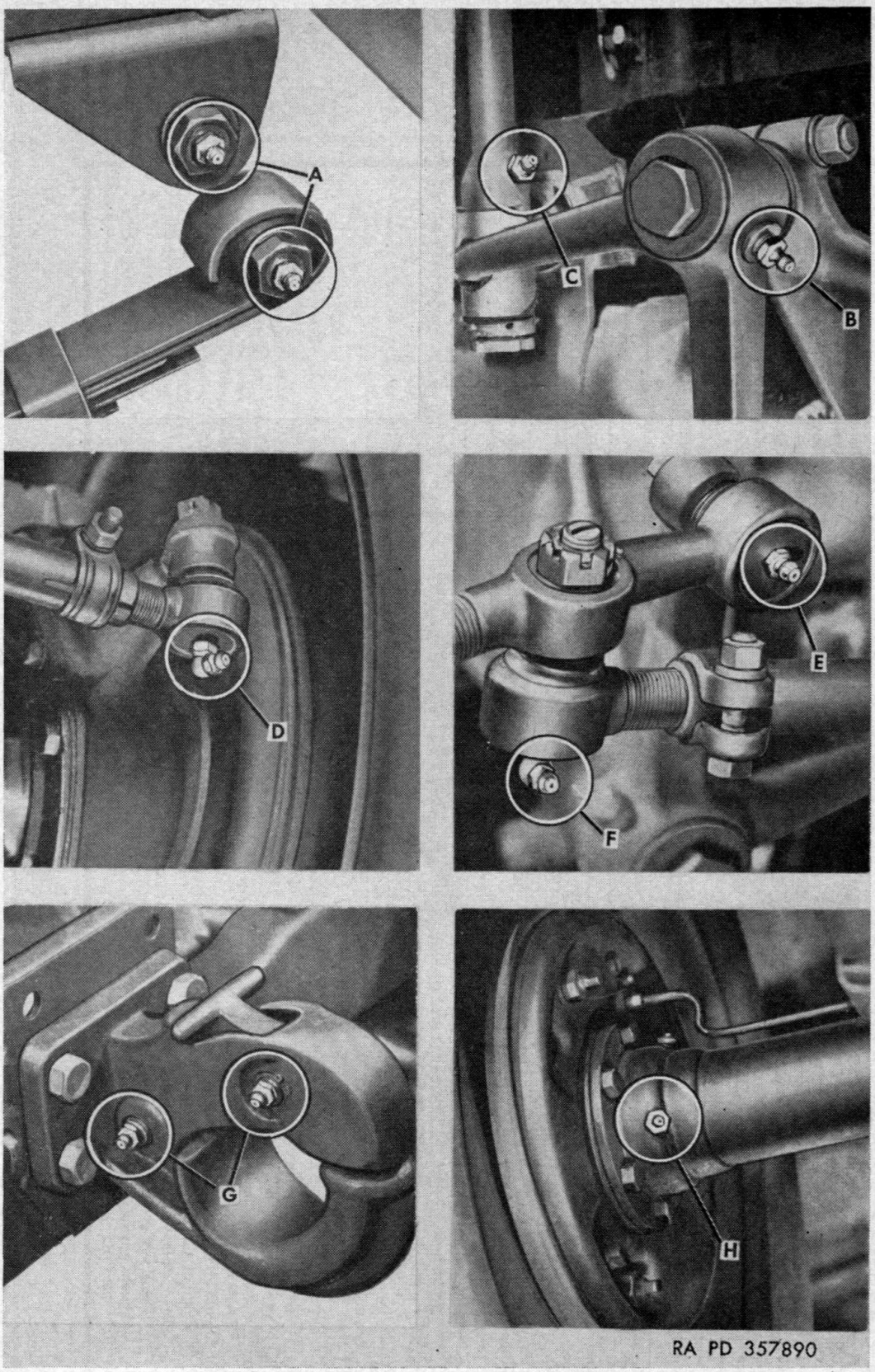

Figure 10. Lubrication points A to H.

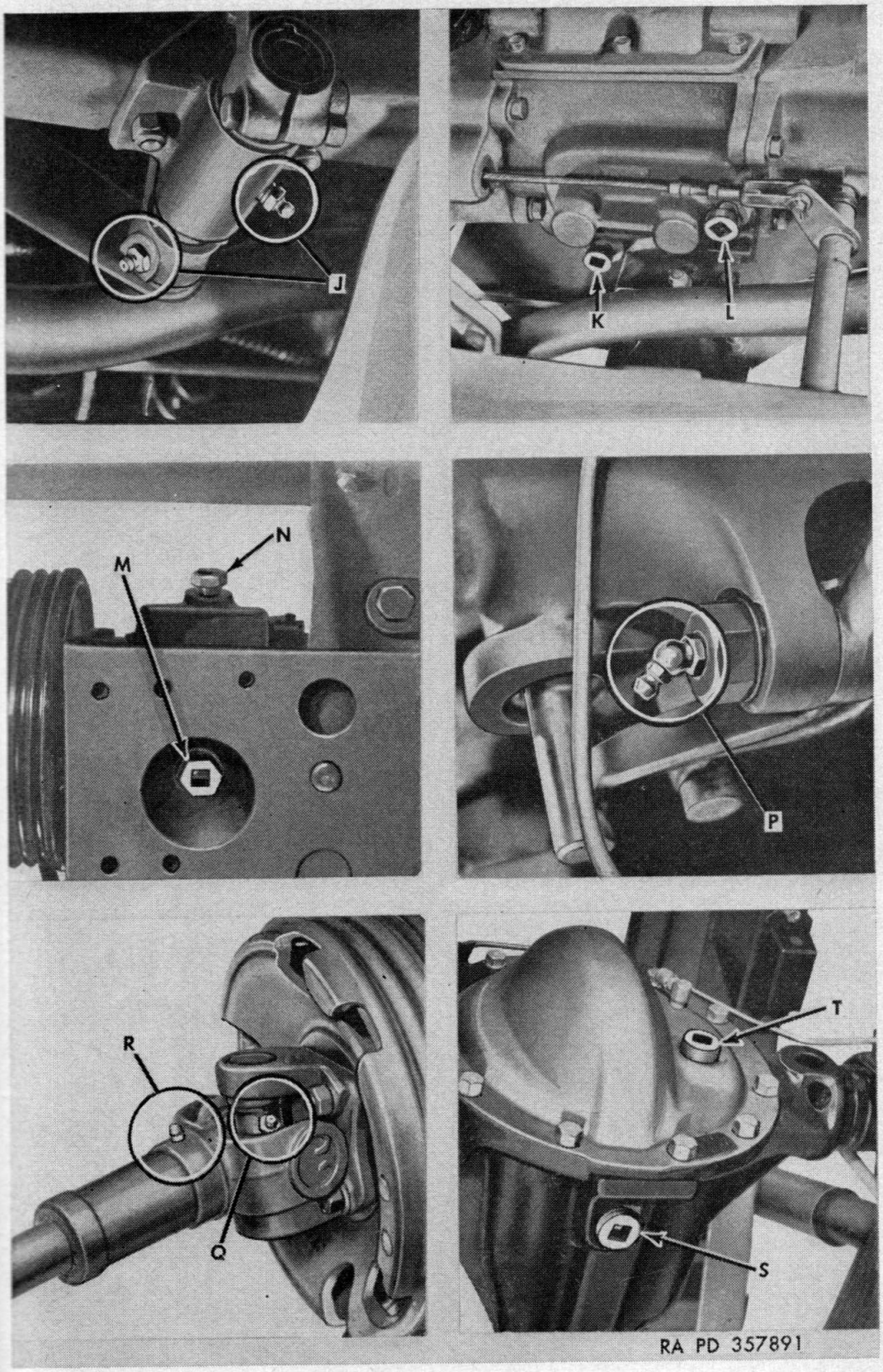

Figure 11. Lubrication points J to T.

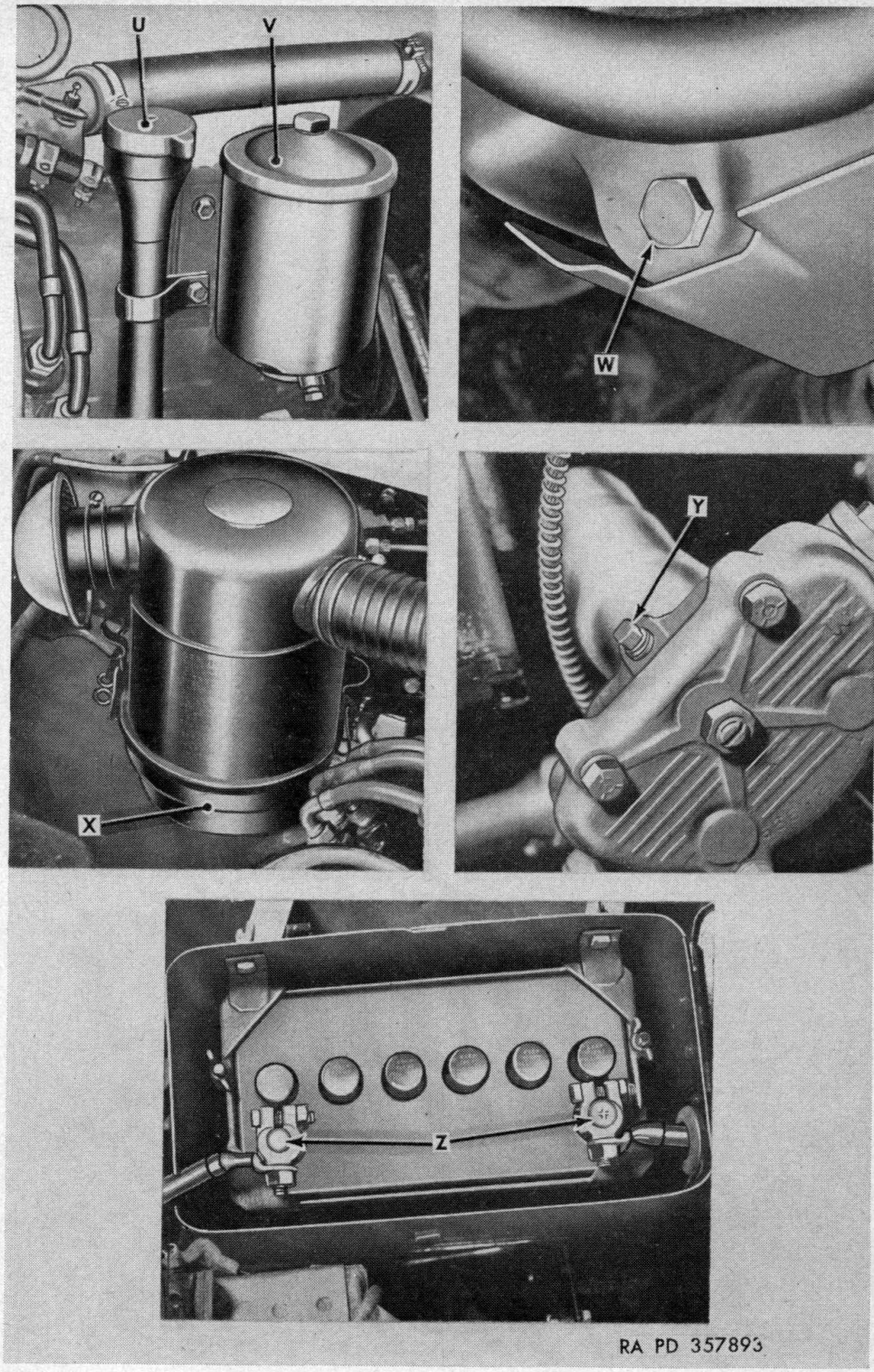

Figure 12. Lubrication points U to Z.

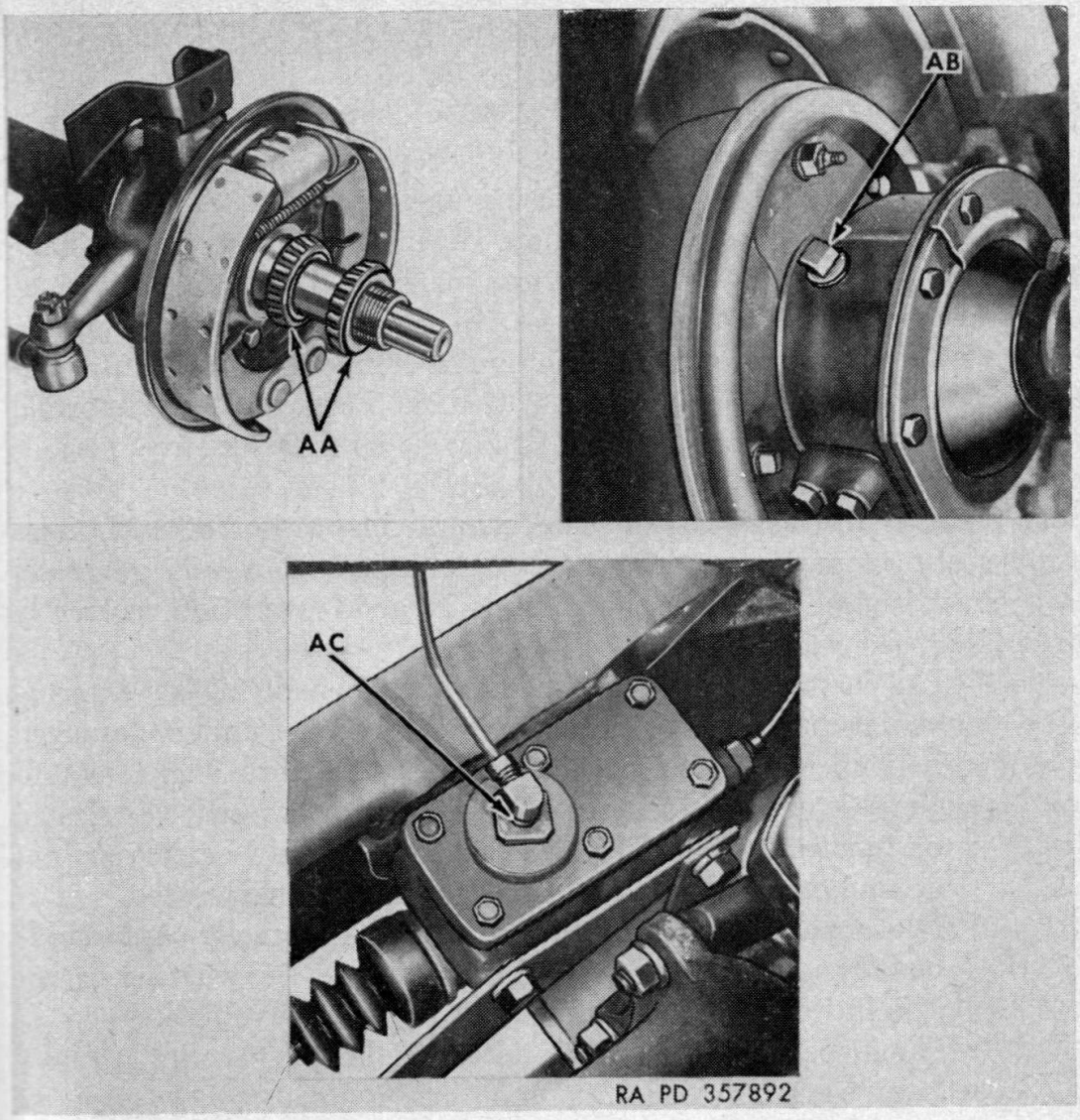

Figure 13. Lubrication points AA to AC.

d. Lubrication After Dust and Sand Operations. After the engine and complete vehicle has been thoroughly cleaned and dried, inspections must be made at all points of lubrication for lubricants fouled by these abrasives. Relubricate as directed in the lubrication order. Clean oil filter and air cleaner.

39. Painting

Instructions for the preparation of the matériel for painting, methods of painting, and materials to be used are contained in TM 9–2851.

Section III. PREVENTIVE MAINTENANCE SERVICES

40. General

a. Responsibility and Intervals. Preventive maintenance services are the responsibility of the using organization. These services consist generally of before operation, during operation, at the halt, after operation, and weekly services performed by the driver or operator and the scheduled services to be performed at designated intervals by organization mechanic or maintenance crews. Intervals are based on normal operations. Reduce intervals for abnormal operations or severe conditions. Intervals during inactive periods may be extended accordingly.

b. Definition of Terms. The general inspection of each item applies also to any supporting member or connection, and generally is a check to see whether the item is in good condition, correctly assembled, secure, and not excessively worn.

(1) The inspection for "good condition" usually is an external visual inspection to determine whether the unit is damaged beyond safe or serviceable limits. The term "good condition" is explained further as not bent or twisted, not chafed or burned, not broken or cracked, not bare or frayed, not dented or collapsed, not torn or cut, not deteriorated.

(2) The inspection of a unit to see that it is "correctly assembled" usually is an external visual inspection to see whether or not it is in its normal assembled position in the vehicle.

(3) The inspection of a unit to determine if it is "secure" usually is an external visual examination, a hand-feel, wrench, or pry-bar check for looseness. Such an inspection should include any brackets, lock washers, lock nuts, locking wires, or cotter pins used in assembly.

(4) "Excessively worn" will be understood to mean worn close to or beyond serviceable limits and likely to result in failure if not replaced before the next scheduled inspection.

41. Cleaning

a. General. Any special cleaning instructions required for specific mechanisms or parts are contained in the pertinent section. General cleaning instructions are as follows:

(1) Use volatile mineral spirits paint thinner and dry-cleaning solvent to clean or wash grease or oil from all parts of the vehicle.

(2) A solution of one part grease-cleaning compound to four parts of volatile mineral spirits paint thinner may be used for dissolving grease and oil from engine blocks, chassis, and other parts. After cleaning, use cold water to rinse off any solution which remains.

(3) Use clean water or a soap solution of one-fourth pound of soap chips to a gallon of hot water for all rubber parts and over-all general cleaning of painted surfaces.

(4) After the parts are cleaned, rinse and dry them thoroughly. Take care to keep the parts clean.

(5) Remove the protective grease coating from new parts, since this grease usually is not a good lubricant.

b. General Precautions in Cleaning.

(1) Volatile mineral spirits paint thinner or dry-cleaning solvent are inflammable and should not be used near an open flame. Fire extinguishers should be provided when these materials are used. In addition, they evaporate quickly and have a drying effect on the skin. If used without gloves, they may cause cracks in the skin and, in the case of some individuals, a mild irritation or inflammation. Use only in well ventilated places.

(2) Avoid getting petroleum products such as volatile mineral spirits paint thinner, dry-cleaning solvent, engine fuels, or lubricants on rubber parts as the petroleum product will deteriorate the rubber.

(3) The use of gasoline or benzine for cleaning is prohibited.

42. Preventive Maintenance by Driver or Operator

a. Purpose. To insure mechanical efficiency, it is necessary that the vehicle be inspected systematically at intervals each day it is operated and weekly, so defects may be discovered and corrected before they result in serious damage or failure. Certain scheduled maintenance services will be performed at these designated intervals. Any defects or unsatisfactory operating characteristics beyond the scope of the driver or operator to correct must be reported at the earliest opportunity to the designated individual in authority.

b. Services. The services set forth in table II are those performed by the driver or operator before operation, during operation, at the halt, after operation, and weekly. Every organization must thoroughly school its personnel in performing the maintenance procedures for this vehicle as set forth in this manual.

Table II. Driver's or operator's preventive maintenance services

Intervals					Procedure
Before operation	During operation	At the halt	After operation	Weekly	
					USUAL CONDITIONS
X	----	X	X	X	(1) *Fuel, oil, and water.* Check the amount of fuel in the tanks and note any indications of leaks. Add fuel, if necessary, and check the spare fuel containers. Check the oil level and add oil, if necessary. Rotate Cuno oil filter handle several turns to clear disks of dirt. Check water level in the cooling system and note any leaks. When water is added during period that antifreeze is in use, a hydrometer test must be made and antifreeze added, if necessary, to provide safe operation to meet lowest anticipated temperature. Remove oil filter drain plug to remove accumulated foreign matter.
				X	(2) *Tires and wheels.*
X	----	X	X	X	(a) All tires should be properly inflated and spares properly secured in their carriers.
			X	X	(b) Remove all foreign matter such as nails, glass, or stones from tires. Examine tires for signs of low pressure, abnormal tread wear, cuts, and presence of valve caps. All tires with cuts extending to or into the cord body, or worn smooth in center of tread, or which show abnormal tread wear must be reported to proper authority for corrective action.
				X	(c) Check tires for proper matching and irregular wear and change position, as required. Check wheel nuts for proper tightness.
X	----	X	----	X	(3) *Leaks, general.* Check under the vehicle and in engine compartment for any indication of fuel, oil, water, gear oil, or brake fluid leaks.
X	----	X	X	X	(4) *Visual inspection of equipment.* Determine if lamps and reflector, horn, fire extinguishers, mirrors, top and side curtains, tools, etc, are in the proper place and in good operating order.
X	X	----	----	----	(5) *Instruments.* With the engine running, check all instruments for normal readings.
----	X	----	----	----	(6) *Operating observations.* While the vehicle is in operation the driver or operator should be alert for any sounds that may be a sign of trouble, such as rattle, knocks, squeaks, or hums. The instruments should be checked and any unusual reading noted which would indicate any part of the vehicle or powered ground equipment functioning improperly. Every time the brakes are used, gears shifted, or the vehicle turned, the driver or operator should instinctively consider it a test and note any unusual or unsatisfactory performance.

Table II. Driver's or operator's preventive maintenance services—Continued

Intervals					Procedure
Before operation	During operation	At the halt	After operation	Weekly	
					USUAL CONDITIONS—Continued
					(7) *Clean equipment.*
			X	----	(*a*) Clean dirt and trash from inside body. Clean glass and, when practicable, wipe off exterior of equipment.
				X	(*b*) Wash the vehicle when possible. If not possible, wipe off thoroughly. Thoroughly clean engine and engine compartment of all excess dirt, trash, fuel, and oil drippings.
				X	(8) *Battery.* Clean and add necessary water. Check terminal connections to see that they are securely fastened and properly coated with grease.
				X	(9) *Assemblies and belts.* Check all assemblies such as carburetor, generator, regulator, starter, and water pump for loose connections or mountings. Check adjustment of fan and drive belts.
				X	(10) *Electrical wiring.* Check all accessible wiring and ascertain that it is securely connected and supported, that insulation is not cracked, or chafed, and that conduits are in good condition and secure. Report any unserviceable wiring.
			X	X	(11) *Tools and equipment.* Check to see that all tools and equipment are serviceable and in their proper place. Clean tools and equipment weekly.
			X	X	(12) *Lights.* Observe whether the lights operate properly. Inspect all lenses and warning reflectors for dirt or damage; clean, if necessary.
			X	X	(*13*) *Horn and windshield wipers.* Test horn for proper operation. Test windshield wipers to insure proper functioning and cleaning action.
				X	(14) *Towing connections.* Weekly inspect towing hooks and pintle hook for looseness or damage. Clean and lubricate, as required, and inpect for abnormal wear. Test to be sure that latching mechanism closes completely and latches securely.
				X	(15) *Springs and suspensions.* Check springs for abnormal sag, broken or shifted leaves, loose or missing rebound clips, eyebolts, U-bolts, or shackles. Also check shock absorbers to see that they are not damaged.
				X	(16) *Axle and transfer vents.* Check and clean all axle housings and transfer vents to see that they are in good condition and secure. Free all breather vents of obstructions.

Table II. Driver's or operator's preventive maintenance services—Continued

Intervals					Procedure
Before operation	During operation	At the halt	After operation	Weekly	
					USUAL CONDITIONS—Continued
				X	(17) *Publications.* Check to see that all appropriate publications concerning the operation and maintenance of the equipment are on hand and in good order.
			X	X	(18) *Lubrication as needed.* Lubricate equipment in accordance with instruction order.
					UNUSUAL CONDITIONS
					a. General. Perform all services as directed under "usual conditions," items (1) through (18), above. In *addition*, perform services or *modify those given above* in accordance with similarly numbered items below. Service intervals and grades of lubricants will be changed only when ambient temperatures *consistently* in the next higher or lower temperature range are anticipated. Procedures are divided into four parts, as follows:
					Extreme cold. Items (1), (2), (4), (6) to (12) inclusive, (14) to (20) inclusive, (21), (22) to (25), inclusive.
					Extreme hot. Items (1), (2), (6), (8), (9), (20).
					Unusual terrain. Items (1), (2), (6), (7), (12), (20).
					Fording operations. Items (1), (2), (5) to (9), inclusive, (11), (12), (14), (15), (17) to (20), inclusive, (26).
					b. Extreme cold. Date given for extreme cold conditions is based on the assumption that the Arctic winterization kit has been installed (0° to −65° F.), and that the power plant heater will be employed during halts of longer duration than 1 hour.
					(1) *Fuel, oil, water, and air cleaner.*
					(*a*) *Fuel* (pars. 28 *c*, 29 *b*, 29 *c*, and 38).
X					*1.* Set manifold heater valve for winter operation. If fuel fails to arrive at carburetor, check for ice crystals in the fuel line. Remove by warming and blowing out lines. If ice crystals have formed within the carburetor, warm the carburetor and clean it. Check priming pump and fuel pump for proper operation.

Table II. Driver's or operator's preventive maintenance services—Continued

Intervals					Procedure
Before operation	During operation	At the halt	After operation	Weekly	
					UNUSUAL CONDITIONS—Continued
X	----	X	X	----	*2.* Keep fuel tank *filled* with Arctic grade fuel to reduce condensation and resultant frost crystals. Keep ice and snow away from openings in fuel tank, drums, other containers, and hose nozzles. Do not draw fuel from drums with pump inlet lower than 3 inches from bottom of drum. Allow collected water to settle after each handling of fuel drums. Use strainer if vehicle is being refueled by pouring from small containers. Add about one cupful of alcohol to each 10 gallons of fuel added. Check operation of throttle and accelerator. Throttle cable should not be lubricated.
X	----	----	X	----	*3.* Keep power plant heater fuel tank filled.
				X	*4.* Drain fuel tank to eliminate moisture. Clean sump of collected water and remove sludge caused by the addition of alcohol to the fuel.
					(*b*) *Oil* (pars. 28 *c* (3), and 38).
X	----	----	----	----	*1.* Change to lubricants and special oils as directed in lubrication order, in accordance with the lowest ambient temperatures anticipated. Keep ice and snow away from openings in containers. To facilitate pouring, oils should be warmed. Reduce lubrication intervals, as necessary, to assure continuous and proper lubrication. Sealed bearings not packed with Arctic lubricant must be warmed before attempting a start.
			X	X	*2.* Inspect crankcase and gear cases for collections of sludge and water. Clean out and refill all cases while lubricant is still warm and fluid, whenever any water is present. Clear crankcase vent and oil filter of accumulated ice and snow.
				X	*3.* Check hydraulic brake cylinders and shock absorbers for quality and quantity of fluid. Check oil in air cleaner and filter unit in oil filter.
					(*c*) *Water* (pars. 29 *b* (5) and 244).
X	----	----	X	----	*1.* Check for quality and quantity of coolant. Check for proper opening point of thermostat by watching the temperature gage and the volume of coolant entering the radiator. Clear radiator honeycombs of collected snow and ice, and adjust radiator winterfront cover to suit temperature conditions.

Table II. Driver's or operator's preventive maintenance services—Continued

Intervals					Procedure
Before operation	During operation	At the halt	After operation	Weekly	
					UNUSUAL CONDITIONS—Continued
				X	2. Make hydrometer test of ethylene-glycol type antifreeze solution. Add corrosion inhibitor. Arctic winter type antifreeze compound requires only replenishment of losses. No diluent or inhibitor will be added. Being correctly mixed at time of issue, no specific gravity readings need be made.
	X				3. Watch temperature gage constantly. If reading is consistently over 200° F., under normal terrain conditions, open radiator cover flap further or investigate and remedy the cause.
X		X	X		4. Check for leaks at hose connections and gaskets at cylinder head and jackets. Feel hoses for collapsed interior linings. Check water pump shaft packing for leaks.
					(*d*) *Air cleaner.* Change oil as prescribed in lubrication order.
					(2) *Tires and wheels* (pars. 29*f* and 243*d*).
X		X			(*a*) Check air pressure with tire pressure gage. Do not rely on appearance of tire for correct inflation. Look for tires frozen to the ground, and frozen flat spots, where in contact with the ground, during long halts. Move vehicle a few feet and inspect. Attach tire chains before actual need for them arises.
X					(*b*) Operate the vehicle slowly for the first few hundred feet to "work out" any flat spots. Slightly deflate tires for additional traction in soft snow or ground, and for landing operations. Drive carefully over ground having deep, frozen ruts (par. 31).
			X		(*c*) Park vehicle with wheels on dry ground or on brush to prevent tires freezing to the ground. Repair tire chains, if required.
					(4) *Visual inspection of equipment.*
X					(*a*) Check completeness and serviceability of winterization equipment. Test personnel heater and power plant heater. Check operation and completeness of engine starting aid (slave) kit. Test spare batteries in slave kit. Check doors and windows for proper closing against cold and drifting snow.
		X			(*b*) Check for security of spare wheel, power plant heater, and other accessories.

Table II. Driver's or operator's preventive maintenance services—Continued

Intervals					Procedure
Before operation	During operation	At the halt	After operation	Weekly	
					UNUSUAL CONDITIONS—Continued
X					(6) *Operating observations.* Check for the feel of stiffness of lubricant in wheel bearings, clutch throwout, brakes and steering system. This will be indicated by unusual power demand and failure to "coast" when engine is decelerated. Observe the oil pressure and coolant temperature gages constantly, as well as the ammeter. Listen for audible signs of malfunctions in-being or about to occur, such as knocks or squeals, and note any tendency of the vehicles to drift, steer hard or failure to respond promptly to brake applications. Check functioning of the windshield wiper and apply defroster heat blast gradually and occasionally to insure readiness for use at any time.
					Note. Do not apply defroster heat fully on an extremely cold wind shield, as the sudden change in temperature will crack the glass.
					(7) *Clean equipment.*
X		X	X		(*a*) Clear all loose drifted snow and ice formations from distributor, coil, spark plugs, brake cylinders and hoses, steering knuckles, tie rod and drag link, and around the crankcase vent. Remove ice from windshield, door and rear panel glasses, mirror, and from lamp lenses when night operation is involved.
		X	X		(*b*) Clean vehicle floor of accumulated snow, mud and water tracked in by personnel. If in the form of water, open the drain holes in the front floorplates.
X		X	X		(*c*) Clean fuel and lubricating dispensing equipment of snow and ice before using. Check for the presence of water in the containers.
					(8) *Batteries* (pars. 29*b*(3), 243*e*(1) and (245).) Vehicle storage batteries must be fully charged and warmed to about 35° F., otherwise, batteries must be taken from stocks stored in warmed shelter. Start slave kit generator to charge the spare batteries. A hot air duct is provided to lead hot air to points to be warmed. A lead is provided to connect the vehicle slave receptacle to the 24-volt terminals on the slave kit instrument panel.
					Note. Make sure that battery is not frozen when introducing an auxiliary charging current. If frozen, battery may be thawed out slowly in a warmed shelter.
					Specific gravity of electrolyte should be 1.280 corrected to 80° F. electrolyte temperature (par. 245).

Table II. Driver's or operator's preventive maintenance services—Continued

Intervals					Procedure
Before operation	During operation	At the halt	After operation	Weekly	
					UNUSUAL CONDITIONS—Continued
					(9) *Assemblies and belts.*
X	----	X	----	----	(*a*) Slacken tension of belts slightly. Test belts for hardening and lack of elasticity.
	X	----	----	----	(*b*) Watch ammeter for irregular or unsteady registration of amperage. This may be due to loose belts and will adversely affect battery charging and the passage of coolant into the radiator.
					(10) *Electrical wiring.*
					(*a*) Thoroughly clean all exposed wiring and terminals. Spray-coat with ignition insulation compound. Coat interior of distributor similarly except for metal contacts.
X	----	----	----	----	(*b*) Remove spark plugs and reduce standard gap-setting by 0.005 inch.
X	----	----	----	----	(*c*) Check all sealed units to insure tightness against drifting snow and water.
					(11) *Tools and equipment.*
X	----	----	----	----	(*a*) Organizational maintenance equipment must be cared for and kept in operable condition at all times.
X	----	----	----	----	(*b*) Check availability and serviceability of tire chains. Check for correct size by test application of all four chains on spare wheel. Install tire chains, if
			X	----	needed (pars. 31 and 33). Clean and swab each chain with oil after use, and stow in vehicle in place provided.
					(12) *Lights.*
X	----	X	----	----	(*a*) Clear sleet formations from lamp lenses when night operation with lights is necessary.
			X	----	(*b*) Replace all cracked or broken lamp lenses to avoid entrance of moisture.
X	----	X	X	----	(13) *Horn and windshield wipers.* Carefully loosen the windshield wiper blades from the glass and clean the glass. Operating the windshield defroster will facilitate the operations.
X	----	----	----	----	(14) *Towing connections—winch.* On vehicles provided with front winch, check controls for proper functioning. Lubricate as directed in lubrication order and TB ORD 126.
					(15) *Springs and suspensions.*
X	----	----	----	----	(*a*) Check hydraulic type shock absorbers for proper functioning. Replace if necessary.
		X	X	----	(*b*) Check for soundness of attaching bolts, for spring shackles, and shock absorbers.

Table II. Driver's or operator's preventive maintenance services—Continued

Intervals					Procedure
Before operation	During operation	At the halt	After operation	Weekly	
					UNUSUAL CONDITIONS—Continued
X					(16) *Axle and transfer vents.* Check to make sure that vent tubes provided for transfer, and transmission, and vent fittings for differentials are secure.
X					(17) *Publications.* Check to insure that publication covering the winterization kit is in the vehicle.
					(18) *Lubrication as needed* (par. 38).
X				X	(*a*) Lubricate in accordance with instructions contained in lubrication order for existing temperature.
X		X		X	(*b*) Reduce service intervals to suit extreme cold temperature conditions.
X					(*c*) Change grade of lubricants only when ambient temperatures are *consistently* in the next higher or lower range given in the lubrication order (above 32° F.; 40° to −10° F; and 0° to −65° F).
				X	(21) *Fuel filter.* Drain fuel in bottom of fuel tank by removing the pipe plug. Remove filter assembly and clean it thoroughly of accumulated matter. Add alcohol at each refilling of fuel tank at the rate of 1 pint per 10 gallons of gasoline.
					Note. Alcohol mixed in the gasoline may cause deposits of water-alcohol precipitate when water accumulates in the tank.
					(22) *Winterization kits* (par. 28*b*).
X					(*a*) *Personnel heater.* Test thermostatic control of personnel heater unit at driver's position. Open hot air ducts to suit heat desired. Do not direct heat on cold windshield glass until interior of vehicle body is warmed.
X					(*b*) *Power plant heater.* Check power plant heater fuel tank for fuel. Test heater for proper functioning.
X					(*c*) *Hard-top closure.* Closure must be securely attached and airtight. Check for tight closing of doors and windows.
X					(*d*) *Hood and radiator covers.* Check to insure that canvas hood cover is securely strapped in place. Strap radiator winterfront cover flap in position of air opening desired.
X					(*e*) *Battery container.* Check to see that battery is secure and that compartment cover is in place and secured.
					(23) *Slave kit.*

Table II. Driver's or operator's preventive maintenance services—Continued

Intervals					Procedure
Before operation	During operation	At the halt	After operation	Weekly	
					UNUSUAL CONDITIONS—Continued
X					(*a*) Operation of the cold starting aid kit (slave kit) is described in pamphlet accompanying the kit. One slave kit can serve several vehicles at one time. It weighs about 840 pounds, and can be transported on a light cargo truck, on skids, or on a toboggan. (*b*) Heat from the slave kit heater may be directed against the engine oil pan, battery, transmission, transfer case, etc., by means of the rubber hose provided. Heat also will be directed against all sealed type ball bearings which have not been packed with Arctic winter grade of lubricant. When one or more brakes are "frozen" or condensation has formed ice crystals in a fuel line, carburetor, or other enclosure, heat may be used to melt the ice prior to thorough cleaning of the item. *Note.* Ice formation from condensation is probable when the vehicle is brought into a warm shelter from extreme cold, and then again moved to outdoors. (*c*) Current from the generator 24-volt terminals on the panel may be led direct to the vehicle battery circuit by means of the slave receptacle mounted on the vehicle for this purpose. *Note.* The four 6-volt storage batteries are connecte d in series in the vehicle for 24-volt input and output current.
					(24) *Brakes.*
X		X	X		(*a*) Clean off all accumulations of mud, snow, and ice at brake drums, brake cylinder boots, and brake hoses.
X					(*b*) Check for proper grade and quantity of oil in hydraulic brake system in accordance with TB ORD 126.
					(25) *Top and body curtains.*
					(*a*) On vehicles equipped with flexible, demountable top and side curtains, care must be exercised that the flexible glass windows are not cracked. This material becomes very brittle in extreme cold.

Table II. Driver's or operator's preventive maintenance services—Continued

Intervals					Procedure
Before operation	During operation	At the halt	After operation	Weekly	
					UNUSUAL CONDITIONS—Continued
			X		(*b*) When the curtains are removed and the top frame is lowered, care must be taken in properly folding and stowing the top and curtains. For extreme cold weather maintenance, see paragraphs 242 to 246; for lubrication, paragraph 38.
					c. Extreme hot. Descriptions given herein are for conditions prevailing upon transition from moderate temperature areas to areas of extreme hot weather (90° to 130° F.). Changes from extreme cold weather conditions to moderate temperature areas are described under "Dewinterization," paragraph 247. Care must be taken that no sealed accessories are left unsealed after servicing so that the accessories will function properly. For extreme hot weather maintenance, see paragraph 248; for lubrication, paragraph 38.
					(1) *Fuel, oil, water, and air cleaner.*
					(*a*) Lubricate throughout as directed in lubrication order for temperatures above 32° F. Clean oil filter and clean and change oil in air cleaner as frequently as necessary. See par. 31 for operation in dust and sand.
X					(*b*) Check to see that dewinterization of the vehicle has been completely accomplished (par. 247). Thoroughly reverse flush the cooling system after antifreeze solution has been drained off. (See TM 9–850.) Fill cooling system with clean, soft water and add 15 ounces of corrosion inhibiting compound. Be sure that the 180° F. engine thermostat has been replaced by a standard 150° F. thermostat.
X		X	X		(*c*) Fill system to within a few inches of the overflow pipe with clean, soft water.
				X	(*d*) Check for presence of rust and scale in cooling system. As rust and scale formations occur more often during extreme hot weather, the cooling system must be flushed frequently.
					(2) *Tires and wheels.*
X		X			(*a*) Reduce air pressure slightly to about 20 to 22 psi for continuous high-speed operation in extreme hot weather on hard roads.
		X	X		(*b*) Shield tires from direct heat and light rays of the sun, whenever possible.
					(6) *Operating observations.*

Table II. Driver's or operator's preventive maintenance services—Continued

Intervals					Procedure
Before operation	During operation	At the halt	After operation	Weekly	
					UNUSUAL CONDITIONS—Continued
					(*a*) Operating the vehicle over usual types of terrain in extreme hot weather requires that a close watch be kept of oil pressure and temperature gage readings. Consistent engine temperature readings of 200° F. or higher must be investigated and the fault corrected. Fluctuations from 180° to 200° F. in coolant temperature is to be expected on hilly, high-speed movement. For added crew comfort, the cowl ventilator flap may be opened.
	X	----	----	----	(*b*) Note "feel" of brake application for indications of loss or thinning of brake fluid. Listen, and note by steering effort, for signs of incorrect tire inflation. Tires should be of slightly less pressure during extreme hot weather operation.
X	----	----	----	----	(*c*) Make sure that engine manifold heater is turned to summer position.
	X	----	----	----	(*d*) Be on the alert for air locks in the fuel lines during extreme hot weather operations as evidenced by a stoppage of fuel flow. Correct by disconnecting the lines and reconnecting them.
					(8) *Batteries.*
X	----	----	----	X	(*a*) In extreme hot weather operation, the specific gravity readings of batteries should not exceed 1.210 to 1.230. Acid of 1.280 sp gr should be diluted with pure, distilled water to suit. Recharge batteries at 1.160 sp gr.
X	----	----	X	----	(*b*) Check for electrolyte level in battery. Correct amount is approximately three-eighths inch above the plates.
			X	----	(*c*) When parking vehicle for a period of several days, the batteries should be removed and stored in a cool place. This includes vehicles on "deadline" or in a shop.
X	----	----	----	----	(9) *Assemblies and belts.* Keep water pump and fan drive belts tight with a minimum of slippage.
					(18) *Lubrication as needed.*
X	----	----	----	----	(*a*) Lubrication of the vehicle and its components, including hydraulic oil in shock absorbers and hydraulic brakes, will be accomplished as directed in lubrication order.
X	----	X	X	----	(*b*) Carefully check for evidence of leaks on axles, gear cases, and on ground beneath the vehicle.

Table II. Driver's or operator's preventive maintenance services—Continued

Intervals					Procedure
Before operation	During operation	At the halt	After operation	Weekly	
					UNUSUAL CONDITIONS—Continued
					d. Unusual terrain. Vehicle operation involving swirling clouds of dust and sand cause minute particles to cover all parts of the vehicle and to enter into each small crevice. This grit forms an abrasive, when mixed with lubricant, resulting in rapid wear of bearing surfaces. Salt in sand, during beach operation, causes additional corrosive action on all exposed parts of the vehicle. Blown with sufficient force, sand may blast the surface of windows and the windshield to the point of absolute opacity, and destroy painted surfaces. Visibility will be poor due to these storms and to swirls of dust created by the leading vehicles in a convoy. Operating the vehicle in snow, ice, and sleet is described in paragraph 31. Operation in dust, sands, mud, swamps, tundra, and muskeg also are described therein. Fording operations are described in paragraph 33. Servicing required for operation under these conditions is generally described in paragraphs 31, 33, and 249, covering operations in water. Make sure that pioneer tools are in place and serviceable.
					(1) *Fuel, oil, water, and air cleaner.*
X	----	X	X	----	(*a*) *Fuel.* The fuel tank being vented to the air cleaner, no dust particles will enter the fuel except when refilling. Clean area around the filler cap before filling the tank. Keep container closed until actually used. Keep supply tanks, drums, and pump capped and covered until ready to use.
X	----	X	X	----	(*b*) *Oil.* When operating in swirling clouds of dust or fine sand, a piece of cloth tied over the crankcase vent will keep out abrasive matter. Clean oil filter as often as necessary, reducing normal intervals according to amount of grit in the filtering unit. Check condition of crankcase oil after each day's operation.
X	----	X	X	----	(*c*) *Water.* Clean radiator of accumulated dust and sand before the honeycombs are clogged to a point where coolant will overheat.
X	----	X	X	----	(*d*) *Air cleaner.* Change oil in air cleaner freequently, reducing normal intervals according to amount of grit accumulated in the filtering unit.
					(2) *Tires and wheels.*

Table II. Driver's or operator's preventive maintenance services—Continued

Intervals					Procedure
Before operation	During operation	At the halt	After operation	Weekly	
					UNUSUAL CONDITIONS—Continued
X		X			(*a*) Reduce normal tire pressure a few pounds when operating in extreme hot weather, in hot loose sand, in desert and beach landing operations, over swampy ground, in loose, packing snow, and when driving over dried or frozen ruts. Restore to rated pressure when terrain conditions are again normal and ambient temperature moderate (par. 205). Inspect tires for cuts and abrasions at each halt.
X		X			(*b*) Apply tire chains when conditions warrant and before actually required, such as for swamp crossing, deep snow, and deep mud (par. 31).
X					(*c*) Lubricate wheel bearings generously before operation under unusual terrain conditions, as this will retard the entrance of grit and water.
					(6) *Operating observations.*
X	X	X			(*a*) Check for abrasive effect of sandstorms on windshield glass and other glazing. This abrasion may result in complete opacity of the glass. To overcome this, when operation becomes an extreme emergency due to the tactical situation, the vehicle should be operated with the top down, windshield lowered, and the crew wearing suitable protection.
			X		(*b*) Replace glass if frosted (sandblasted) to the extent that it affects visability.
				X	(*c*) Restore paint as required (TM 9–2851).
			X		(7) *Clean equipment.* Clean all parts of the vehicle and engine compartment after each operation in dust, sand, mud, and snow. Perform complete lubrication service at once. Touch-up painting should be accomplished where exposed surfaces are discovered.
X					(18) *Lubrication is needed.*
					(*a*) The vehicle should have a complete lubrication service before operation under normal terrain conditions. Generous applications of oils and greases in bearings will retard the entrance of these abrasives into bearing surfaces.
X					(*b*) After thorough cleaning of all parts of the vehicle, perform a complete and thorough lubrication service (par. 8).

Intervals					Procedure
Before operation	During operation	At the halt	After operation	Weekly	
					UNUSUAL CONDITIONS—Continued
					e. Fording operations. See paragraph 249 for maintenance after fording. Fording operations include all operations involving the operation of the vehicle in rainy seasons; water thrown by the driving wheels (splashing); fording at depths less than hub depth; at depths beyond wheel hub depth but below critical engine units; maximum operable depth with deep water fording kit installed; complete accidental submersion; and exposure to salt water and spray. For general descriptions and instructions for deep water fording operations, see TM 9–2853. It is important that all personnel servicing the vehicle use extreme care when making adjustments, to guard against inadvertently leaving vent tubes or hoses disconnected or loose, or to properly seat covers on gaskets during installation. Use sealing compound when installing hoses.
					Although most units are sealed and vented, the sudden cooling of the warm interior air upon submersion may cause condensation, with resultant collection of moisture within the cases or instruments. A period of exposure to warm air after fording should eliminate this fault. Cases which can be opened may be uncovered and dried.
					(1) *Fuel and oil* (par. 28*c*).
X	----	----	----	----	(*a*) *Fuel.* Check fuel tank filler cap for tightness.
X	----	----	----	----	(*b*) *Oil.* Check oil filler cap for tightness.
					(2) *Tires and wheels.*
X	----	----	----	----	(*a*) Reduce tire pressure to slightly below normal to increase traction on bottom during crossing and upon reaching the landing point. This also provides some protection against sharp rocks and coral formations.
			X	----	(*b*) Inflate tires to prescribed pressure after landing (par. 205).
			X	----	(*c*) Remove all wheels. Clean bearings and repack. While front wheels are removed, drain oil out of front steering universal joints and refill to proper level with lubricant, as prescribed in lubrication order. See item 20.
			X	----	(5) *Instruments.* Check all instruments on panel, after fording, to see whether any water has entered the housing due to cracked lens or leaky seal. Replace instruments which cannot be readily dried by warming, as they cannot be disassembled in the field.

Table II. Driver's or operator's preventive maintenance services—Continued

Intervals					Procedure
Before operation	During operation	At the halt	After operation	Weekly	
					UNUSUAL CONDITIONS—Continued
					(6) *Operating observations* (par. 33).
X	----	----	----	----	(*a*) Lower top and windshield. Stow top in vehicle or in accompanying vehicle. Make sure that engine is functioning properly, and is warmed sufficiently to insure correct operation after the chill submersion.
					Note. Do not enter the water with the engine extremely hot.
					Place vehicle gear shift levers in "low-low" position. Pull control handle on instrument panel to seal engine crankcase by closing the shut-off valves in the crankcase ventilating system.
	X	----	----	----	(*b*) Enter water slowly and move steadily along the bottom. Be on the alert for sinkholes which may cover the air intake and exhaust outlet tubes. This will stall the vehicle and require towing out and complete scavenging of all accessories.
					If engine should stall under water, it may be started in the normal way.
			X	----	(7) *Clean equipment.* Clean engine compartment, tool compartment and body of all water and scum. Clean and dry folded top and curtains. Raise windshield and mount top.
					(8) *Batteries.*
X	----	----	----	----	(*a*) Check for tightness of special vent caps on battery cells.
			X	----	(*b*) Check for seepage of water into battery. Test for correct specific gravity and voltage. Add electrolyte and/or charge, if necessary.
X	----	----	----	----	(9) *Assemblies and belts.* Belts will remain under proper tension for fording operations, as the pump and generator continue to function under water, and the fan will be requird as soon as landing is accomplished.
					(11) *Tools and equipment.*
X	----	----	----	----	(*a*) Remove top and curtains. Carefully fold and stow in a place where they will not be washed overboard. Lower windshield and strap in position.
			X	----	(*b*) Raise and latch windshield in place. Install bows and top. Unfold curtains and dry thoroughly before stowing away or mounting.
			X	----	(14) *Lights.* Check all lights for presence of water. Drain, clean, and remedy the cause of the leakage.
			X	----	(15) *Windshield wipers.* Test windshield wipers. If water has entered these units, replace them.

Table II. Driver's or operator's preventive maintenance services—Continued

Intervals					Procedure
Before operation	During operation	At the halt	After operation	Weekly	
					UNUSUAL CONDITIONS—Continued
					(17) *Springs and suspensions.*
X	----	----	----	----	(*a*) Check shock absorbers for correct amount and type of hydraulic oil. If leakage is evident, replace the unit.
			X	----	(*b*) Check for presence of water in shock absorbers. Drain, dry, and refill.
			X	----	(18) *Axle and transfer vents.* Loosen vent tubes from transmission, transfer, and axle housings and inspect for the presence of water. Clean and tighten each connection securely.
			X	----	(20) *Lubrication as needed.* See paragraph 16 for after fording cleaning and lubrication instructions.
			X	----	(26) *Deep water fording.* As soon as the vehicle emerges from the water, push the control valve handle on the instrument panel inward. This opens the crankcase vent system. If no further fording is anticipated, remove air intake extension tube and exhaust pipe extension tube and stow carefully to avoid loss or damage.

43. Preventive Maintenance by Organizational Maintenance Mechanics

a. INTERVALS. The frequency of the preventive maintenance services prescribed is considered a minimum requirement for normal operation of vehicle. Under unusual operating conditions, such as extreme temperatures, dust or sand, or extremely wet terrain, it may be necessary to perform certain maintenance services more frequently.

b. DRIVER OR OPERATOR PARTICIPATION. The drivers or operators should accompany their vehicles and assist the mechanics while periodic organizational preventive maintenance services are performed. Ordinarily, the driver should present the vehicle for a scheduled preventive maintenance service in a reasonably clean condition.

c. SPECIAL SERVICES. These are indicated by repeating the item numbers in the columns which show the interval at which the services are to be performed, and show that the parts or assemblies are to receive certain mandatory services. For example, an item number in one or both columns opposite a *tighten* procedure means that the actual tightening of the object must be performed. The special services are as follows:

(1) *Adjust.* Make all necessary adjustments in accordance with the pertinent section of this manual, technical bulletins, or other current directives.

(2) *Clean.* Clean the unit as outlined in paragraph 41 to remove old lubricant, dirt, and other foreign material.

(3) *Special lubrication.* This applies either to lubrication operations that do not appear on the vehicle lubrication order, or to items that do appear on such orders but which should be performed in connection with the maintenance operations, if parts have to be disassembled for inspection or service.

(4) *Serve.* This usually consists of performing special operations, such as replenishing battery water, draining and refilling units with oil, and changing or cleaning of the oil filter, air cleaner, or cartridges.

(5) *Tighten.* All tightening operations should be performed with sufficient wrench torque (force on the wrench handle) to tighten the unit according to good mechanical practice. Use a torque indicating wrench, where specified. Do not overtighten, as this may strip threads or cause distortion. Tightening will always be understood to include the correct installation of lock washer, lock nuts, lock wire, or cotter pins provided to secure the tightening.

d. Special Conditions. When conditions make it difficult to perform the complete preventive maintenance procedures at one time, they can sometimes be handled in sections, planning to complete all operations within the week, if possible. All available time at halts and in bivouac areas must be utilized, if necessary, to assure that maintenance operations are completed. When limited by the tactical situation, items with special services in the columns should be given first consideration.

e. Work Sheet. The numbers of the preventive maintenance procedures that follow are identical with those outlined on DA AGO Form 461. Certain items on the work sheet that do not apply to this vehicle are not included in the procedures of this manual. In general, the sequence of items on the work sheet is followed, but in some instances there is deviation for conservation of the mechanics' time and effort.

f. Procedures. Table III lists the services to be performed by the organizational mechanics at the designated intervals. Each page of the table has two columns at its left edge for semiannual and monthly maintenance respectively. Very often it will be found that a particular procedure does not apply to both scheduled maintenances. In order to determine which procedure to follow, look down the column corresponding to the maintenance procedure, and wherever an item number appears, perform the operations indicated opposite the number.

Table III. Organizational Mechanic or Maintenance Crew Preventive Maintenance Services

Intervals		Procedures
6,000 mile (6-month)	1,000 mile (60-day)	
		ROAD TEST
		Note. When the tactical situation does not permit a full road test, perform those items which require little or no movement of the vehicle, namely, items 3, 4, 5, 6, 9, 10, and 14. Make a full road test of from 5, to not more than 10 miles, over varied terrain if possible.
1	1	*Before operation service.* Perform before operation service as outlined in table II (par. 42).
3	3	*Dash instruments and gages.* Observe instruments frequently during road test (figs. 70 and 71).
------	------	*Charge indicator.* Charge indicator should show high charge for short time after starting, then zero or slight positive (plus) reading above speeds of 12 to 15 miles per hour with lights and accessories off. Zero reading is normal with lights and accessories on (par. 216*a*(1)).
------	------	*Speedometer.* See that speedometer indicates vehicle speed, operates without excessive fluctuation or noise, and that odometer registers total mileage correctly (par. 216*a*(6)).
------	------	*Temperature indicator.* Temperature indicator reading should increase gradually to normal operating range of 160° F. to 180° F. (par. 216*a*(7)).
------	------	*Fuel gage.* Fuel gage must indicate the approximate amount of fuel in tank (par. 216*a*(2)).
4	4	*Horn, mirror, and windshield wiper.* Test horn for proper operation and tone, tactical situation permitting (par. 216*d*). Adjust mirror, and inspect for broken or discolored glass. Wiper should have sufficient arm tension to stay in up position. Examine blade for good condition and full contact with glass throughout entire stroke (par. 235).
5	5	*Brakes.* Test brakes for smooth, even stop, excessive pedal travel before application, "spongy" pedal, or loss of pedal pressure when brakes are held on. Brakes must not squeak or require excessive pedal pressure. Test pedal free travel, which should be ½ inch (par. 177). Hand brake must hold vehicle on a reasonable grade, must have positive ratchet action and one-third reserve handle travel. There should be ½-inch reserve clearance between hand-brake relay crank and lower end of hand-brake cable conduit (par. 182*a*).
6	6	*Clutch.* Clutch must have free pedal travel of 1¼ inches. Test clutch for slip, grab, gear clash, or rattle. Listen for noises that would indicate dry or defective release bearing or pilot bushing (pars. 118, 119, and 120).

Table III. Organizational Mechanic or Maintenance Crew Preventive Maintenance Services—Continued

Intervals		Procedures
6,000 mile (6-month)	1,000 mile (60-day)	
		ROAD TEST—Continued
7	7	*Transmission and transfer.* Shift through entire of transmission and transfer, noting whether the levers move easily and snap into each position (fig. 5). With shifting levers in each position, accelerate and decelerate engine, noting any unusual noises or tendency of levers to slip into neutral. Inspect for loose mountings.
8	8	*Steering.* Steering gear must not bind. There should be no excessive free play with wheels in straightahead position. Test for existence of front end shimmy, wander, or side pull (par. 188*a*).
9	9	*Engine.* Engine must idle smoothly without stalling. Test acceleration and pulling power in each transmission speed. Listen for detonation and "ping," misses, popping, spitting, or other noises that might indicate need for engine repair.
10	10	*Unusual noises.* Listen for noises that might indicate loose, damaged, or faulty parts.
13	13	*Temperatures.* Feel brake drums and wheel hubs for abnormally high temperatures. Overheated brake drum or wheel hub may indicate dragging brake or defective, dry, or improperly adjusted wheel bearing. Examine differentials, transmission, and transfer case for too high running temperature. *Note.* Transfer case operates at a higher temperature than other cases.
14	14	*Leaks.* Look on ground under vehicle for indications of coolant, fuel, oil, or hydraulic fluid leaks.
16	16	*Gear oil level and leaks.* Examine lubricant levels of transmission, transfer, and differentials. Inspect cases for leaks. Safe level when cold is even with filler plug. If an oil change is due drain and refill (par. 36).
		MAINTENANCE OPERATIONS
17	17	*Unusual noises.* With engine running, proceed as follows: Accelerate and decelerate engine slightly, and listen for unusual engine noises. With transmission in third gear, front wheel drive engaged, and engine at fast idle, listen for unusual noises in operating units. Observe propeller shaft and universal joints, wheels, and axles for excessive vibration and run-out.
22	22	*Battery.* Inspect battery case for cracks and leaks (fig. 63). Inspect cables, terminals, bolts, posts, straps, and hold-downs for good condition and secure mounting. Clean top of battery. Test specific gravity and voltage. Specific gravity readings below 1.225 indicate battery should be recharged or replaced. Electrolyte level should be above top of plates, and may extend one-half inch above plates.

Table III. *Organizational Mechanic or Maintenance Crew Preventive Maintenance Services*—Continued

Intervals		Procedures
6,000 mile (6-month)	1,000 mile (60-day)	
		MAINTENANCE OPERATIONS—Continued
22	------	*Serve.* Perform high-rate discharge test according to instructions for "condition" test which accompany test instrument. Cell variation should not be more than 30 per cent.
		Note. Specific gravity must be above 1.225 to make this test.
22	22	*Clean.* Clean entire battery and carrier, and repaint carrier, is corroded. Clean battery cable terminals, terminal bolts and nuts, and battery posts; grease lightly, inspect bolts for serviceability. Tighten terminals and hold-downs carefully to avoid damage to battery. Add clean water to one-half inch above plates (par. (195*a*).
18	18	*Cylinder head and gasket.* Look for cracks, and indications of water or compression leaks. Tighten cylinder head (only if leaks are indicated and after performing item 21) with torque wrench. Tighten head screws to from 65 to 75 foot-pounds; head stud nuts to from 60 to 65 foot-pounds. Tighten in correct order (fig. 16).
------	19	*Valve mechanism.* Adjust valves only if noisy.
19	------	*Adjust.* Check clearance and adjust valves. Proper clearances are—intake valve, 0.016 inch when hot or cold; exhaust valve, 0.016 inch when hot or cold (par. 70).
------	20	*Spark plugs.* Inspect for insulator cracks and leakage through insulators and gaskets. Service, if required (par. 138).
20	------	*Serve.* Clean and adjust plugs to gap of 0.030 inch, using round gage. Plugs with broken insulators, excessive carbon deposits, electrodes burned thin or otherwise unserviceable, must be replaced.
		Note. If sand blast cleaner is not available, install new or reconditioned plugs.
21	------	*Compression.* Test compression with all plugs removed, and with throttle and choke wide open. Standard pressure is approximately 110 psi at cranking speed; minimum pressure is 70 psi. Maximum variation between cylinders must not be more than 10 psi. If variation is greater than 10 psi, recheck weak cylinders, using oil test to determine whether piston rings or valves are faulty, and report to higher authority. Record all readings.
23	23	*Crankcase.* Observe vehicle for crankcase, valve cover, timing case, or flywheel housing oil leaks. Clean Cuno oil filter (par. 72*e*). Check oil level. Drain and refill crankcase if change is due. See lubrication order (par. 36).
23	------	***Caution:*** Do not start engine until completion of item 24.
24	24	*Oil filters and lines.* Inspect filters, lines, and connections for good condition or leaks.

Table III. Organizational Mechanic or Maintenance Crew Preventive Maintenance Services—Continued

Intervals		Procedures
6,000 mile (6-month)	1,000 mile (60-day)	
		MAINTENANCE OPERATIONS—Continued
24	------	*Serve.* Remove filter cartridge, clean filter case, and install new cartridge and gaskets. Refill crankcase (5 qts. with new filter cartridge). Again inspect for leaks with engine running and check oil level after engine is stopped (par. 72*a*).
25	25	*Radiator.* Observe radiator core, hose, cap, and gaskets for good condition and inspect for leaks. ***Caution:*** System operates under 3¼ to 4¼ psi pressure (be careful in removing cap). Examine air passages and guards for obstructions and clean out any dirt, insects, or trash. Test and record antifreeze value (as climate demands). Examine coolant for oil, rust, or foreign material. Clean and flush radiator, as needed (par. 134*e*). ***Caution:*** Save and filter coolant if antifreeze is present. Add inhibitor and antifreeze if needed.
25	25	*Tighten.* Tighten hose clamps. Inspect radiator cap and gasket for tight seal.
26	26	*Water pump and fan.* Loosen fan belt; test water pump shaft and bearing for play. Inspect pump for secure attachment, good condition, and for leaks. Inspect fan for alinement and secure mounting (pars. 131 and 132).
27	27	*Generator, starter, and switch.* Inspect these units to see if they are in good condition, clean, and securely connected or mounted.
27	------	*Serve.* Inspect commutators and brushes for good condition and wear. Brushes should be free in holders, and have full contact with commutator. Clean commutators with 2/0 flint paper if needed. Blow out with compressed air. Replace generator or starter when commutator is scored, rough, or worn, or brushes are less than half their original length (par. 143).
29	29	*Drive belt and pulleys.* Inspect fan belt for fraying, wear, and deterioration (fig. 30). Inspect pulleys for cracks and misalinement. Replace or adjust belt as needed. Adjust to deflection of 1 inch between pulleys.
31	31	*Distributor.* Clean and remove distributor cap. Examine cap and rotor arm for cracks, corrosion, and burned conductors. Clean breaker plate assembly, if dirty. Inspect breaker points for burning, pitting, alinement, and adjustment (par. 137).
31	------	*Special lubrication.* Sparingly lubricate cam surfaces, movable breaker arm pin, wick, and camshaft according to lubrication order (fig. 9).
32	32	*Wiring.* Examine wiring for cleanliness, and secure connections and attachment. Clean and tighten as required.

Table III. *Organizational Mechanic or Maintenance Crew Preventive Maintenance Services*—Continued

Intervals		Procedures
6,000 mile (6-month)	1,000 mile (60-day)	
		MAINTENANCE OPERATIONS—Continued
33	33	*Manifolds and heat control.* Tighten manifold stud nuts, as required, to from 31 to 35 foot-pounds torque. Inspect for gasket leaks. Heat control valve must be free and bimetal spring must be in good condition (pars. 66 and 67).
34	34	*Air cleaner.* Examiner air cleaner for good condition and secure mounting. Examine oil cup. If dirty, remove and clean filter element; do not apply oil to element after cleaning. Clean oil cup and refill (five-eighths qt.) (par. 122).
36	36	*Carburetor.* Make certain that the choke and the throttle open and close fully. Lubricate linkage, and inspect for worn parts. See that seals are clean and in good condition (par. 123).
38	38	*Fuel pump.* Observe fuel pump for leaks, secure mounting, and pressure reading. Pressure should be 4 to 5½ psi.
39	39	*Starter.* Start engine and observe starter for positive action, normal speed, and unusual noise. Make sure oil pressure gage and ammeter readings are satisfactory (par. 141).
40	40	*Leaks.* Look around engine and on ground under engine for oil, fuel, coolant, or hydraulic brake fluid leaks.
41	41	*Ignition timing.* With neon light, check ignition timing. Observe if spark advances automatically. Adjust timing, as required (par. 136). **CAUTION:** Close timing hole cover and tighten screw.
		Engine idle and and vacuum test.
42	42	Adjust engine to smooth idle, using vacuum gage; obtain highest possible steady vaccum reading.
------	43	*Regulator unit.* See that regulator is in good condition, and that all connections and mountings are secure (par. 144).
43	------	*Test.* Connect low voltage circuit tester and test voltage regulator, current regulator, and cut-out for output control.
47	47	*Tires and rims.* Inspect valve stems for correct position and missing caps (par. 205). Inspect tires for cuts, bruises, blisters, and irregular and excessive tread wear. Remove imbedded glass, nails, or stones. Directional and nondirectional tires should not be installed on same vehicle. If equipped with directional tires, open end of chevron should meet ground first on front tires, and last on rear tires. Tires should match on all wheels within three-fourths inch over-all circumference, and as to type of tread. Take measurements with all tires equally inflated. Inspect tire carrier for looseness and damage. Tighten all lug nuts securely. Inflate tires to 28 psi (cold).

Table III. Organizational Mechanic or Maintenance Crew Preventive Maintenance Services—Continued

Intervals		Procedures
6,000 mile (6-month)	1,000 mile (60-day)	
		MAINTENANCE OPERATIONS—Continued
48	48	*Rear brakes.* Remove grease and dirt from brake drums and backing plates, and inspect for excessive wear or scoring and loose mounting bolts. Inspect brake hose for proper fit and for deterioration. Inspect wheel cylinders (exterior) for good condition, secure mounting and for leaks. Tighten brake support and drum mounting bolts securely (pars. 176, 178, 180, and 181).
49	49	*Rear brake shoes.* Remove right rear wheel and inspect linings for wear, oil, and dirt, and possibility of rivets scoring drum before next 1,000-mile inspection. If lining on right rear wheel requires replacement, remove all wheels for lining inspection.
49	------	*Serve.* Remove all wheels and drums. Observe linings for wear, oil, and dirt, and determine if shoes are secure and guided by anchor pins. Inspect return springs for good action. Lightly lubricate anchor pins. Adjust brake shoes to 0.005-inch clearance at heel and 0.008-inch clearance at toe.
------	52	*Rear wheels.* Inspect wheel for good condition. Without removal, test for evidence of looseness of wheel bearing adjustment, and dry or damaged bearings. Inspect around drive flanges, brake supports, and drums for lubricant or brake fluid leaks. Tighten drive flange and wheel nuts. ***Caution:*** If vehicle has operated in deep water which may have entered wheel bearings, inspect right rear wheel bearing for contamination. Remove, clean, repack, and adjust as for 6,000-mile service. If contamination of lubricant has occurred, service other wheel bearings likewise (pars. 158*b* and 172).
52	------	*Clean.* Disassemble wheel bearings and seals, clean and inspect for damage.
52	------	*Special lubrication.* Pack wheel bearings, install new seals and adjust bearings (par. 36).
53	53	*Front brakes.* Examine brake hose for chafing, leakage, and deterioration. Inspect wheel cylinders (exterior) for good condition, secure mounting, and leaks (pars. 176, 180, and 181).
53	------	*Drums and supports.* Clean drums and backing plates thoroughly, and tighten backing plate bolts. Inspect drums for damage, looseness, excessive wear, and scoring. Lightly lubricate anchor pins (par. 161).
54	------	*Front brake shoes.* Inspect brake shoes, linings, and anchors for damage or looseness. Replace worn parts and worn linings. Clean dust from linings. Adjust brake shoes to 0.005-inch clearance at heel, and 0.008-inch clearance at toe.
55	55	*Steering knuckles.* Inspect steering knuckle housings and oil seals for serviceable condition. Check lubricant for contamination. Refill to bottom of filler hole.

Table III. Organizational Mechanic or Maintenance Crew Preventive Maintenance Services—Continued

Intervals		Procedures
4,000 mile (8-month)	1,000 mile (60-day)	
		MAINTENANCE OPERATIONS—Continued
56	56	*Front springs.* Inspect front springs for good condition, correct alinement, and excessive deflection. Inspect springs for excessive wear of spring bushing and clips. Tighten U-bolts securely and uniformly. Examine U-shackles and pivot bolts for wear.
57	57	*Steering.* Observe steering gear, pitman arm, drag link, tie rod and steering connecting rods for good condition, correct assembly, and secure mounting.
57	------	*Tighten.* Tighten and adjust steering gear assembly mounting nuts and screws, arms, tie rods, drag link, pitman arm, and gear, and steering wheel nuts. Replace broken seals or worn parts.
58	58	*Front shock absorbers.* Inspect shock absorbers to see if they are in good condition and secure, if bodies are leaking fluid, and if rubber bushings have deteriorated. If rubber bushings are hard or cracked, apply a film of brake fluid (par. 187). *Note.* If fluid is leaking or bodies are defective, shock absorber must be replaced.
60	60	*Front wheels.* Inspect for good condition, security, end play, and lubricant leaks. Rotate wheels and observe for loose, broken, or dry bearings (par. 158).
60	------	*Clean and lubricate.* Remove, clean, inspect, lubricate, and replace bearings as necessary. Adjust bearings and test for wheel shake before removing jack (par. 158*b*).
61	61	*Front axle.* Examine front axle housing for good condition and lubricant leaks. Inspect pinion shaft for end play and grease leaks. Inspect axle for apparent alinement, and see that vent is open (pars. 156 and 157).
62	62	*Front propeller shaft.* Inspect propeller shaft for damage and incorrect assembly, excessive wear, and lubricant leaks. Inspect universal and slip joints for alinement, wear, and leakage (pars. 154*a* and 155*a*).
62	------	*Tighten.* Tighten flange yoke bolts.
63	63	*Engine mountings and braces.* See that engine mountings are in good condition and secure, and that rubber mountings are not separated from metal backing. Tighten front mountings if loose. Adjust rear mounting bolts to from 38 to 42 foot-pounds with torque wrench. Securely tighten radio noise suppression bond strap mounting.
64	64	*Parking hand brake.* See that drum is not scored or oily and that lining is not oil soaked or worn thin. Inspect ratchet for positive holding action. Lubricate upper end of conduit tube at cable with engine oil (par. 182).

Table III. Organizational Mechanic or Maintenance Crew Preventive Maintenance Services—Continued

Intervals		Procedures
6,000 mile (6-month)	1,000 mile (60-day)	
		MAINTENANCE OPERATIONS—Continued
64	------	*Adjust.* Adjust clearance between drum and lining to from 0.005 inch to 0.010 inch. Reserve lever travel should be one-third the ratchet range. There must be ½-inch reserve clearance (on cable) between relay crank and lower end of hand brake conduit.
65	65	*Clutch pedal.* Clutch pedal linkage must be secure and not worn; return spring must be operative; clutch should have free pedal travel of 1¼ inches.
65	------	*Adjust.* Adjust clutch pedal free travel to 1¼ inches (par. 118).
66	66	*Brake pedal.* Test brake pedal operation; brake linkage must be secure and not worn excessively; return spring must be operative; brake should have one-third reserve travel (par. 177).
66	------	*Adjust.* Adjust brake pedal free travel to one-half inch.
67	67	*Brake master cylinder.* Inspect master cylinder for good condition and secure mounting; check master cylinder boot for good condition and correct installation; inspect stop light switch for terminal attachment and correct operation. Look for brake fluid leaks; clean out filler plug vent. Fill master cylinder reservoir to one-quarter inch below plug (par. 179).
71	71	*Transmission.* Inspect oil seals and gaskets for leakage. Test control for looseness, excessive wear, and improper operation. Inspect mounting, assembly bolts, and cap screws for looseness.
71	------	*Tighten.* Tighten mounting, assembly bolts, and cap screws (fig. 38).
72	72	*Transfer.* Inspect oil seals and gaskets for leakage. Test controls for looseness, excessive wear, and improper operation. Inspect mounting, assembly bolts, and cap screws for looseness. Clean vent (fig. 38).
72	------	*Tighten.* Tighten mounting and assembly bolts, nuts, and cap screws.
73	73	*Rear propeller shaft.* Remove any trash that may be wrapped around shaft or universal joints. Inspect mounting of universal and slip joints for misalinement, wear, and grease leaks (pars. 154*b* and 155*b*).
73	------	*Tighten.* Tighten flange yoke cap screws.
75	75	*Rear axle.* Inspect rear axle housing for leaks; feel for excessive play in pinion shaft; clean vent. Make sure differential carrier mounting cap screws are tight.
77	77	*Rear springs.* Check springs for shifted leaves due to broken center bolt, loose spring clips, or U-bolts. If found loose, tighten U-bolts to from 50 to 55 foot-pounds torque. Tighten spring pivot bolt nut to from 29 to 30 foot-pounds torque (par. 186) (fig. 49).

Table III. Organizational Mechanic or Maintenance Crew Preventive Maintenance Services—Continued

Intervals		Procedures
6,000 mile (6-month)	1,000 mile (60-day)	
		MAINTENANCE OPERATIONS—Continued
78	78	*Rear shock absorbers.* Inspect in the same manner as for item 58.
80	80	*Frame.* Examine frame for loose side rails and cross members. Tighten loose bolts. If frame appears to be bent, or out of alinement, report condition to ordnance maintenance unit.
81	81	*Wiring, conduits, and grommets.* Inspect all wiring for looseness and broken insulation; check conduits and grommets for proper position and good condition (pars. 213 and 215).
82	82	*Fuel tank and lines.* Inspect tank and lines for good condition, secure mounting, and leaks; check cap for defective gasket or clogged vent (fig. 26).
82	------	*Serve.* Remove fuel tank drain plug briefly, and drain off accumulated water and sediment.
83	83	*Brake lines and connections.* Inspect brake lines for proper mounting, cracks, worn spots in lines, leaks, deteriorated or damaged hose and connections (par. 181).
84	84	*Exhaust pipe and muffler.* Inspect exhaust pipe and muffler for secure mounting, rusted condition, damage or leaks (par. 126). Inspect tail pipe for stoppage.
85	85	*Vehicle lubrication.* Lubricate according to lubrication order (par. 36) in this manual. Observe latest issued lubrication directives. Omit all points lubricated in preceding items.
86	86	*Toe-in and turning stops.* With front wheels on ground, straight-ahead position, use wheel alining gage, and check toe-in. Normal toe-in range is $\frac{3}{64}$ inch to $\frac{5}{32}$ inch (par. 165). Turn front wheels fully in both right and left directions, and determine if turning stops hold tires clear of all parts of vehicle in these positions.
91	91	*Lights.* Determine that switches for head, tail, instrument, and blackout lights operate properly. Operate stop light by depressing brake pedal. Test foot switch, noting whether beam is controlled for high and low positions. Inspect all lights; these must be clean, securely mounted, and in good condition; lenses must not be broken, cracked, or discolored; reflectors must not be discolored; blackout lights must be in good condition with shield in proper position (par. 194).
91	------	*Adjust.* Adjust and aim headlight beams.
92	92	*Safety reflectors.* Safety reflectors must be present, clean, and secure. Replace, if cracked or broken.
93	93	*Front bumper and grille.* Front bumper and grille must be present, in good condition, and securely mounted (fig. 66).
94	94	*Hood, hinges, and fasteners.* Examine hood for alinement and secure mounting, when fastened; see that fasteners are present, secured, undamaged, and not excessively worn or bent. Lubricate hinges and fasteners lightly (par. 239).
95	95	*Front fenders.* Inspect front fenders for good condition and secure mounting (par. 241).

Table III. Organizational Mechanic or Maintenance Crew Preventive Maintenance Services—Continued

Intervals		Procedures
6,000 mile (6-month)	1,000 mile (60-day)	
		MAINTENANCE OPERATIONS—Continued
96	96	*Body hardware.* Inspect body of vehicle according to following standards: Hardware should operate properly and be adequately lubricated; top should be clean, having no holes or tears, and all grommets must be present and in good condition. Windshield should be free from cracks or discoloration; windshield frame and hold-down hooks at hood should be in good condition. Seats and upholstery should be clean and undamaged; body handles should be present, secure, and undamaged.
101	101	*Rear bumpers, pintle hook, latch, and lock pin.* Inspect rear bumpers and pintle hook to see if they are present, in good condition, and secure. Pintle hook safety latch should be free, and lock securely (par. 231).
103	103	*Paint and markings.* Inspect paint of entire vehicle for good condition and bright spots that might cause glare or reflection. Vehicle markings and identification must be legible. Inspecte identification plates and their mountings (if furnished) for good condition, secure mounting, and legibility (par. 40).
131	131	*Tools and equipment.* Standard vehicle tools and equipment must be present, clean, serviceable, and securely mounted (pars. 34 and 35).
135	135	*Publications and Form No. 26.* See that the vehicle manuals and lubrication order, Form No. 91 and DA AGO Form No. 478, are present, legible, and properly stowed (par. 1*b*(2)).
136	136	*Traction devices.* Inspect tire chains for broken or worn links, missing cross chains, or damaged fasteners.
139	139	*Fuel can and bracket.* Inspect fuel can and bracket for damage, leaks, loose mounting, and presence of cap on chain.
142	142	*Final road test.* Road test, rechecking items 2 to 16. Recheck transmission, transfer case, and differentials, for lubricant level and for leaks. Confine this test to minimum distance necessary to satisfactory observations. *Note.* Correct or report all defects found during final road test to ordnance maintenance unit.
		UNUSUAL CONDITIONS
		Maintenance operations and road tests, as prescribed under usual conditions, will apply equally under unusual conditions for operations for all occasions except in extreme cold weather. Intervals are necessarily shortened in extreme cold weather servicing and maintenance. Vehicles subjected to salt water immersion or complete submersion are evacuated to ordnance maintenance unit as soon as possible after the exposure. (See pars. 243, 244, 245, 246, 248, and 249.)

Section IV. TROUBLE SHOOTING

44. Scope

a. This section contains trouble-shooting information and tests for locating and correcting some of the troubles which may develop in the truck. Trouble shooting is a systematic isolation of defective components by means of an analysis of truck trouble symptoms, testing to determine the defective component, and applying the remedies. Each symptom of trouble given for an individual unit or system is followed by a list of probable causes of the trouble and suggested procedures to be followed.

b. This manual cannot cover all possible troubles and deficiencies that may occur under the many conditions of operation. If a specific trouble, test, and remedy therefore, is not covered herein, proceed to isolate the system in which the trouble occurs, and then locate the defective component. Use all the senses to observe and to locate troubles. Do not neglect use of any test instruments, such as ohmmeter, voltmeter, ammeter, test lamp, hydrometer, and pressure and vacuum gages, that are available. Standard automotive theories and principles of operation apply. Question driver or operator to obtain maximum number of observed symptoms. The greater the number of symptoms of troubles that can be evaluated, the easier will be the isolation of the defective system and components thereof.

45. Engine

a. Engine Will Not Turn.

(1) *Mechanical seizure of parts.* If engine cannot be turned, notify ordnance maintenance personnel.

(2) *Starter inoperative.* Refer to paragraph 51.

(3) *Incorrect oil viscosity.* Inspect oil. If improper grade, drain crankcase, and refill with correct grade of oil (par. 36).

b. Engine Turns But Will Not Start.

(1) *Faulty fuel system.* Remove fuel inlet line from the carburetor and, with the ignition switch off, turn the engine with the starter. If free flow of fuel is not evident, fuel is not reaching carburetor. Refer to paragraph 47.

(2) *Faulty ignition system.* Remove one of the spark-plug cables (fig. 32) and hold cable terminal three-eights inch from cylinder head while cranking engine with starter. If a spark does not jump the gap between the terminal and cylinder head, the ignition system is inoperative. Refer to paragraph 50.

(3) *Improper valve adjustment.* Check intake and exhaust-valve clearances and adjust as required (par. 70).

(4) *Carburetor choke inoperative.* Remove air-cleaner-to-carbu-

retor tube from carburetor (par. 123*b*). Inspect choke valve for proper operation. Adjust choke valve, if necessary.

(5) *Loose or corroded battery terminals or ground strap.* Clean and tighten terminal and ground-strap connections (par. 195).

(6) *Leak at carburetor gaskets.* Pour a small quantity of oil onto edges of manifold carburetor gasket. Crank engine with starter. A sucking sound will be heard if gasket leaks. Replace the carburetor gasket (par. 123).

(7) *Faulty battery.* Test batteries for charge and voltage (par. 195). Replace or recharge batteries, as required.

c. Engine Does Not Develop Full Power.

(1) *Improper valve adjustment.* Check valve clearances and adjust as required (par. 70).

(2) *Engine overheats.* Check cooling system (par. 49).

(3) *Faulty ignition.* Refer to paragraph 50.

(4) *Oil temperature too high.* Improper grade or insufficient oil may cause excessive temperatures. Drain and refill with correct grade to the proper level (par. 36).

(5) *Preignition.* With engine temperature at normal operating range (160° to 180° F), rapidly accelerate vehicle in high gear. If preignition or spark knock is present, a pinging sound will be heard during at least a portion of the accelerating period. The intensity of the pinging can be increased by covering radiator and causing engine to operate at excessively high temperatures. If correct grade of fuel is being used and the ignition system (pars. 135 to 139) is functioning satisfactorily, the spark plugs may be of improper heat range or may be defective. Replace spark plugs (par. 138). If ordnance spark plug replacement does not correct condition, notify maintenance personnel.

(6) *Leak at carburetor gaskets.* Refer to *b*(6) above.

(7) *Improper grade of fuel.* Use fuel having a minimum octane rating of 60.

(8) *Faulty compression.* Test compression (par. 65). Compression should not vary more than 10 psi between cylinders. If it does, notify ordnance maintenance personnel.

(9) *Brakes dragging.* Adjust brakes (par. 178).

d. Engine Misfires at Idling Speeds.

(1) *Defective spark plugs.* Test by disconnecting each spark plug cable in turn. Stop engine and disconnect spark plug cable with wrench. Start engine and hold spark plug cable against engine block. If noticeable difference in engine performance results, the spark plug is operating. If no difference is noted, replace spark plug (par. 138). Test each spark plug in this same manner.

(2) *Low or uneven engine-cylinder compression.* Test compression of all cylinders (par. 65). If difference of 10 psi pressure between cylinders is noted, notify ordnance maintenance personnel.

(3) *Faulty ignition system.* Refer to paragraph 50.

(4) *Defective valves.* Check engine vacuum with a vacuum gage (par. 65). Erratic readings at constant engine speed are indicative of defective valves or valve operation. Notify ordnance maintenance personnel.

(5) *Improper valve adjustment.* Check and adjust valve clearance (par. 70).

(6) *Broken valve springs.* Remove valve cover (par. 69) and inspect springs. If broken springs are found, notify ordnance maintenance personnel.

(7) *Leaking cylinder-head gasket.* Tighten cylinder-head nuts in proper sequence (fig. 16) to 65-70 ft-lbs torque. If leak persists, replace cylinder-head gasket (par. 68).

e. Engine Misfires at High Speed.

(1) *Defective fuel pump.* Test pump pressure (par. 47). Replace pump if necessary (par. 125).

(2) *Valve springs weak or broken.* Refer to *d*(6) above.

(3) *Leaking cylinder-head gasket.* Proceed as in *d*(7) above.

(4) *Faulty ignition circuit.* Refer to paragraph 50.

(5) *Incorrect valve adjustment.* Check and adjust clearance (par. 70).

f. Engine Overheats.

(1) *Lean fuel-air mixture.* Adjust carburetor (par. 123). Inspect engine for leaks at carburetor gaskets. Refer to *b*(6) above.

(2) *Faulty cooling system.* Refer to paragraph 49.

(3) *Late ignition timing.* Check ignition timing (par. 136) and make necessary adjustments.

g. Excessive Oil Consumption.

(1) *Engine overheats.* Refer to *f* above.

(2) *Poor compression.* Proceed as in *d*(2) above.

(3) *Oil level too high.* Maintain oil at proper level (par. 36).

(4) *Improper grade and viscosity of oil.* Drain and refill crankcase with oil as specified on lubrication order (par. 36), for prevailing atmospheric temperatures.

(5) *Excessive speeds.* Avoid unnecessary and excessive speeds.

(6) *Excessive low-gear driving.* Operate truck in proper gear for desired speed and terrain conditions (par. 31) (fig. 5).

(7) *Leaks.* Inspect engine, engine compartment, and ground under engine for oil leaks. Tighten any leaking connections, repair or replace broken lines, or notify ordnance maintenance personnel.

908329—50——6

46. Clutch

a. Clutch Drags.

(1) *Defective clutch.* Replace clutch (par. 120).

(2) *Warped or cracked clutch driven disk.* Replace clutch (par. 120).

(3) *Excessive pedal clearance.* Idle engine, depress clutch pedal to fully released position, and allow time for clutch to stop. Shift transmission into first or reverse gear. If the shift cannot be made without a severe clashing of gears, or if after engagement of the gears, there is a jumping or creeping movement ot the truck with the clutch fully released, the clutch is dragging. Adjust clutch linkage (par. 118).

b. Clutch Slips.

(1) *Defective clutch.* Replace clutch (par. 120).

(2) *Worn driven-disk facings.* Replace clutch (par. 120).

(3) *Grease or oil on clutch-driven-disk facings.* Replace clutch (par. 120).

(4) *Insufficient pedal free travel.* Adjust clutch linkage (par. 118).

c. Clutch Chatters.

(1) *Improper connections.* Inspect transmission mounting, propeller shafts, universal joints, and engine mounting for loose connections. Tighten as required.

(2) *Oil or grease on clutch-driven-disk facings.* Clean or replace clutch (par. 120).

47. Fuel System

a. Fuel Does Not Reach Carburetor.

(1) *Inoperative fuel pump.* Disconnect fuel line from inlet side of carburetor. Crank engine with starter. If fuel does not flow freely, check fuel pump (*b.* (1) below). Clean fuel line between fuel tank and fuel pump.

(2) *Lack of fuel.* Check gage on instrument panel (fig. 70), with ignition switch turned on. Check fuel level in fuel tank to be sure there is sufficient fuel in tank and that gage is operative.

b. Fuel Does Not Reach Cylinders.

(1) *Low fuel pump pressure.* Disconnect outlet fuel line from fuel pump and install pressure gage on outlet side of pump. Crank engine with starter. Fuel pump pressure should be between 4 and 5½ psi; replace fuel pump if lower pressure is indicated (par. 125).

(2) *Throttle not opening.* Adjust throttle linkage (par. 123).

(3) *Clogged fuel tank vent line* (fig. 7). Disconnect and clean fuel tank vent line.

(4) *Carburetor jets clogged.* Replace carburetor (par. 123).

c. Excessive Fuel Consumption.

(1) *Improper carburetor adjustment.* Adjust carburetor (par. 123).

(2) *Fuel leaks.* Examine all components of fuel system for leaks. Tighten or replace as required.

(3) *Worn engine parts.* Refer to paragraph 65 for compression test.

(4) *Worn carburetor components.* Replace carburetor (par. 123).

d. Engine Idles Too Fast.

(1) *Improper linkage adjustments.* Adjust linkage (par. 123).

(2) *Improper carburetor adjustments.* Adjust idle speed screws (par. 123).

e. Low Fuel Pressure.

(1) *Clogged fuel lines.* Clean fuel lines between fuel tank and pump and between pump and carburetor.

(2) *Air leaks at fuel lines or fuel pump.* Inspect and correct leaks as necessary.

(3) *Defective fuel pump.* Test pump (*b.* (1) above). Replace pump if necessary (par. 125).

f. Engine Falters on Acceleration. Clogged or worn carburetor parts will cause faltering. Clean or replace carburetor as necessary (par. 123).

48. Exhaust System

a. Excessive noise. Excessively noisy operation is caused by leaking manifold gasket or broken manifold, muffler or tail pipe. Inspect and replace as required.

b. Odor of Exhaust Fumes in Driver's Compartment. Leaky gaskets or broken exhaust manifold, muffler, or tail pipe will allow excessive fumes to reach driver's compartment.

CAUTION: Replace defective parts as soon as possible.

49. Cooling System

a. Clogged Cooling System. Clean system, as outlined in paragraph 134.

b. Coolant Leaks. Inspect cooling system for leaks. Replace hose, water pump, or radiator, if leaking (pars. 130 and 131). Tighten all connections.

c. Defective Thermostat. Remove and test thermostat; replace as necessary (par. 137).

d. Loose Fan Belts. Adjust belts (par. 132).

e. Lack of Water in System. Replenish water. Add antifreeze solution, if required (table IV).

50. Ignition System

a. No Spark. *Charge indicator shows zero reading when ignition switch is turned on.*

(1) *Defective ignition switch* (fig. 6). Test switch and replace if necessary (par. 224).

(2) *Defective ammeter shunt in regulator.* Remove regulator to instrument panel cable plug at regulator. Using a test lamp, test for current from terminals "C" and "A" in regulator receptacle to ground (fig. 32). If lamp lights when lamp leads are touched to terminal "A" and ground, but does not light when touched to terminal "C" and ground, replace regulator (par. 144).

b. No Spark. *Charge indicator shows reading when ignition switch is turned on.*

(1) *Open primary circuit from ignition switch through radio noise-suppression filter, ignition coil primary winding, through breaker points to ground.* Test for continuity from ignition switch through filter, through coil primary winding to movable breaker arm. If an open cable, filter or coil is found, replace defective coil (par. 137*d*), filter, or cable as necessary.

(2) *Breaker points defective or not opening.* Remove coil and distributor cap and inspect breaker points for burned or pitted contact surfaces. Replace if burned or pitted. If not burned or pitted, check point opening (par. 137*d*).

(3) *Defective capacitor (condenser).* Check capacity of capacitor with a capacitor tester. Reading should be 25–26 microfarads (mfd.) plus or minus 10 percent. Replace if reading is not within these limits (par. 137*e*).

(4) *Open secondary winding in ignition coil.* After steps in (1), (2), and (3) above have been completed, and ignition coil was not replaced, test for spark by disconnecting a spark-plug cable from one spark plug. Hold terminal about ⅜ inch from cylinder head while cranking engine with starter. If no spark is observed, replace ignition coil (par. 137).

(5) *Defective spark-plug cables.* Test each cable by disconnecting from spark plug and holding terminal three-eight-inch from cylinder head while cranking engine with starter. Replace any cables not producing a good spark.

(6) *Defective coil and distributor cap.* Remove coil and distributor cap (par. 137*b*) and inspect for cracks or carbonized paths indicating current leaks. Inspect all contacts in cap. Replace cap if any contacts are worn or broken.

(7) *Defective distributor rotor.* Replace rotor (par. 137*c*).

c. Weak Spark.

(1) *Defective ignition coil.* Replace coil (par. 137*f*).

(2) *Loose electrical connections.* Clean and tighten all connections from starter to distributor.
(3) *Defective coil and distributor cap.* Refer to *b* (6) above.
(4) *Defective capacitor (condenser).* Replace capacitor (par. 137*e*).
(5) *Defective distributor points.* Adjust point opening or replace points if burned or pitted (par. 137*d*).

d. Engine Backfires.
(1) *Cracked coil and distributor cap.* Refer to *b* (6) above.
(2) *Crossed spark-plug cables.* Check cables to be sure that they are connected in proper firing order sequence (par. 64).

e. Engine Misfires at High Speed Under Load.
(1) *Defective distributor capacitor (condenser).* Replace capacitor (par. 137*e*).
(2) *Defective ignition coil.* Replace coil (par. 137).
(3) *Distributor point opening incorrect.* Adjust points (par. 137).
(4) *Incorrect spark plug gap.* Adjust gap or replace plugs if necessary (par. 138).

51. Starting and Charging System

a. Starter Fails to Operate.
(1) *Defective battery.* Check battery level and specific gravity (par. 195), and clean and tighten battery terminals. Re charge or replace battery as required.
(2) *Loose battery ground cable.* Clean and tighten battery ground terminal connection (fig. 36).
(3) *Defective starter switch* (fig. 35). Using a heavy cable, short the two terminal posts on the starter switch. If starter operates satisfactorily, switch is defective. Replace starter switch.
(*a*) *Remove starter switch.* Disconnect battery ground cable at battery (fig. 35). Remove cables from battery cable terminal post. Remove nuts and lock washers, securing copper conductor strap to starter switch and starter terminals, and remove conductor strap. Remove six screws and lock washers from switch assembly and remove switch.
(b) *Install starter switch.* Install new switch, using a new gasket, with six screws and lock washers. Tighten securely to make joint waterproof. Install copper conductor strap with two nuts and lock washers. Install cables on battery cable terminal post. Install lock washer and nut. Tighten nut securely.
(*c*) *Install battery ground cable.* Refer to paragraph 195.
(*d*) *Test operation of starter by pressing starter switch.*
(4) *Defective starter.* If starter still does not operate after above tests, it must be replaced (par. 141).

b. Starter Is Noisy.

(1) *Lack of lubrication.* Replace starter (par. 141).

(2) *Worn commutator or bushings.* Replace starter (par. 141).

(3) *Defective drive assembly.* Replace starter (par. 141).

(4) *Loose starter mounting.* Tighten mounting cap screws (fig. 35).

c. Starter Is Sluggish and Will Not Attain Full Cranking Speed. When it has been determined that engine oil is sufficiently fluid and battery is fully charged, check the following causes:

(1) *Sticking brushes, worn commutator, or armature rubbing field coils.* Replace starter (par. 141).

(2) *Loose terminals.* Clean and tighten terminals.

d. Battery Not Being Charged.

(1) *Loose or dirty terminals.* Clean and tighten battery terminals.

(2) *Generator regulator not operating.* If there is a low or no charging rate with weak batteries, replace regulator (par. 144).

(3) *Generator not charging.*

(*a*) *No generator output.* If there is no output from the generator, replace generator.

(*b*) *Unsteady or low output.* Check for loose drive belts and adjust (par. 132), or replace generator (par. 143).

52. Transmission

a. Excessive Noise.

(1) *Lubricant of incorrect viscosity.* Drain and refill with lubricant of correct viscosity (par. 36).

(2) *Insufficient lubricant.* Add lubricant of proper viscosity (par. 36) to one-half inch below level of plug, when cold.

(3) *Gears or bearings broken, worn, or loose on shafts.* Replace the transmission (pars. 147 and 148) if the problem is not one of lubrication, and excessive noise is heard with truck standing still engine running, and transmission is in neutral.

b. Clutch Fails to Release. If clashing of gears is encountered when attempting to shift from neutral into low gear, the clutch is not fully releasing. Adjust clutch pedal free travel (par. 118), or replace clutch (par. 120).

c. Gear Slipping.

(1) *Bent shifting fork.* Refer to ordnance maintenance personnel.

(2) *Weak or broken shift poppet springs.* Refer to higher authority.

(3) *Excessively worn gears.* Replace transmission assembly (pars. 147 and 148).

d. Lubricant Leakage.

(1) *Loose drain plugs.* Tighten.

(2) *Defective gaskets.* Notify ordnance maintenance personnel.

53. Transfer

a. Hard Shifting. Clean and lubricate linkage.

b. Slips Out of Gear. Weak or broken shift poppet spring. Replace transfer (pars. 151 and 152).

c. Lubricant Leakage.

(1) *Loose drain plugs.* Tighten.

(2) *Damaged gaskets or oil seals.* Notify ordnance maintenance personnel.

54. Propeller Shafts

a. Excessive Noise or Vibration.

(1) *Worn universal joint parts or sprung propeller shaft.* Replace propeller shaft (pars. 154 and 155).

(2) *Lack of lubrication.* Lubricate all universal joints (par. 36).

(3) *Universal joints not in same plane.* Disconnect propeller shafts (see note in par. 153) and place universal joints in same plane (pars. 154 and 155).

b. Lubricant Leakage. If caused by damaged oil seals, replace propeller shaft (pars. 154 and 155).

55. Front Axle

a. Hard Steering.

(1) *Lack of lubrication.* Lubricate front axle steering knuckle, tie rod ends, and drag link ends (par. 36).

(2) *Front axle shifted.* Check distance from front spring eye to some point on axle. Compare this measurement with like measurement on opposite side. If measurements do not agree, loosen spring U-bolts, relocate axle, and retighten spring U-bolts.

(3) *Tight steering gear.* With drag link disconnected at front axle, revolve steering gear from one extreme to the other. If bind or rough spots are encountered, notify ordnance maintenance personnel.

(4) *Bind in steering knuckle.* Raise front wheels from ground and disconnect drag link at front axle. Turn wheels and tie rod from side to side. If bind is found, disconnect one end of tie rod from steering knuckle. Test each wheel, turning from side to side. If bind persists and lubrication does not free steering knuckle, replace axle assembly (pars. 166 and 167).

(5) *Improper toe-in.* Check toe-in of front wheels. If not within 1/16- to 3/16-inch limits, adjust tie rods (par. 165).

(6) *Tires underinflated.* Check air pressure, using an accurate gage and inflate tires (par. 205).

(7) *Excessive caster.* Checking of front axle caster requires special equipment. Notify ordnance maintenance personnel.

b. Shimmying.

(1) *Front axle shifted.* Refer to *a* (2) above.

(2) *Excessive looseness in front axle.* Raise front wheels from ground, move wheels from side to side and up and down, and note any looseness. If excessive, replace axle (pars. 166 and 167).

(3) *Insufficient front wheel toe-in.* Check toe-in of front wheels. If not within 1/16- to 3/16-inch limits, adjust tie rods (par. 165).

(4) *Excessive axle cester.* Refer to *a* (7) above.

c. Wandering.

(1) *Tires unequally inflated.* Test tires with accurate pressure gage, and inflate (par. 205).

(2) *Axle shifted.* Refer to *a* (2) above.

(3) *Front wheel bearings out of adjustment.* Adjust front wheel bearings (par. 158).

(4) *Tight steering gear.* Localize trouble to steering gear by disconnecting drag link (*a* (3) above). Adjust (par. 193). If this does not correct condition, notify ordnance maintenance personnel.

56. Rear Axles

a. Continuous Axle Noise.

(1) *Tires improperly inflated or tread worn unevenly.* If axle noise is caused by tires, the noise will disappear when the truck is driven over soft, unfinished road surface. Inflate tires equally and properly (par. 205).

(2) *Insufficient lubricant.* Add lubricant (par. 36).

(3) *Wheel bearings worn, out of adjustment, or in need of lubrication.* If noise persists, check wheel bearings for wear and adjustment (par. 158). Repack wheel bearings (par. 159).

b. Axle Noise on Drive Only or on Coast Only.

(1) *Pinion and ring gear out of adjustment or worn excessively.* Replace rear axle assembly (par. 175).

(2) *Wheel bearings worn, out of adjustment, or in need of lubrication.* If noise persists, check wheel bearings for wear and adjustment (par. 158).

c. Excessive Backlash in Axle Driving Parts.

(1) *Axle flange cap screws or nuts loose.* Tighten nuts.

(2) *Ring gear and pinion out of adjustment or worn excessively.* Replace axle assembly (par. 175).

57. Brakes

a. Pedal Goes to Floor Board.

(1) *Normal wear of linings.* When linings become worn, it is necessary to set shoes in closer to brake drums. Adjust brakes (par. 178).

(2) *Brakes improperly adjusted.* Adjust brake shoes (par. 178).

(3) *Brake fluid leak.* Inspect underneath chassis for signs of fluid leaks at master cylinder, wheel cylinders, and brake lines. Correct the leaks, and refill master cylinder (par. 36).

(4) *Air in system.* Air in the brake system will cause a springy or rubbery action of the pedal. Bleed hydraulic system (par. 181).

(5) *Pedal improperly adjusted.* Brake pedal should have approximately ¼- to ½-inch free travel before pressure stroke starts. Additional free motion reduces the active travel of the master cylinder piston, which is turn limits the amount of working fluid to be expelled from the master cylinder. Adjust the brake pedal travel (par. 178).

(6) *No fluid in supply tank.* Refill master cylinder supply tank (par. 36), and bleed system of air (par. 181).

b. All Brakes Drag.

(1) *Mineral oil in system.* The introduction of mineral oil into the hydraulic brake system will cause the cups to swell, and retard or prevent their action. Clean the system of deleterious oil, and refill with hydraulic brake fluid. If this remedy is not effective, report to ordnance maintenance personnel, as the system will have to be reconditioned and all cylinder cups replaced.

(2) *Brake pedal improperly adjusted.* Brake pedal must have one-half-inch free travel before pressure stroke starts, otherwise the master cylinder relief port will be closed, pressure in the system will gradually build up, and all brakes will drag. Adjust brake pedal free travel to one-half inch (par. 178).

c. One Wheel Drags.

(1) *Brake shoes seizing on anchor pins.* Lubricate brake shoe bearing surface on anchor pins.

(2) *Brake shoes improperly adjusted.* Adjust brake shoe to brake drum clearance (par. 178).

(3) *Loose wheel bearings.* Adjust wheel bearings (par. 158).

(4) *Weak brake shoe return spring.* A weak or broken shoe return spring will prevent brake shoes from being retracted. Replace spring (par. 178).

d. Vehicle Pulls to One Side.

(1) *Improperly adjusted brake shoes.* Adjust brakes (par. 178).

(2) *Grease soaked linings.* Replace brake shoes (par. 178).
(3) *Tires improperly inflated.* Correct the tire inflation (par. 205).

e. Springy, Spongy Pedal.
(1) *Air in system.* Bleed hydraulic brake system (par. 181).
(2) *Brake shoes improperly adjusted.* Adjust shoes (par. 178).

f. Severe Braking Action From Light Pedal Pressure.
(1) *Grease soaked lining.* Replace brake shoes (par. 178).
(2) *Loose brake backing plate.* Notify ordnance maintenance personnel.
(3) *Improperly adjusted brake shoes.* Adjust brake shoe to brake drum clearance (par. 178).

g. Weak Braking Action From Heavy Pedal Pressure.
(1) *Oil on linings.* Replace brake shoes (par. 178).
(2) *Improper brake lining.* Replace brake shoes (par. 178).
(3) *Improper brake shoe adjustment.* Adjust brake shoes (par. 178).

58. Springs and Shock Absorbers

a. Insufficient Flexibility.
(1) *Shock absorbers inoperative.* Disconnect shock absorber and test shock absorber action. If inoperative, replace unit (par. 187).
(2) *Frozen spring shackles.* Free up, lubricate, and adjust spring shackles (par. 185).

b. Excess Flexibility.
(1) *Broken spring leaves.* Examine springs for broken leaves and, if found, replace springs (pars. 185 and 186).
(2) *Shock absorbers inoperative.* Disconnect shock absorber and test operation. If little or no resistance is felt, replace unit (par. 187).

c. Excessive Noise.
(1) *Worn or broken shock absorber.* Inspect shock absorber for wear, damage, or looseness. Replace shock absorber if defective (par. 187).
(2) *Worn spring pins or shackle bolts.* Use pry bar to test for wear of pins or bolts. Replace if necessary.

d. Spring Leaf Failures.
(1) *Grabbing brakes.* Grabbing brakes result in extreme twist or strain on springs. Adjust brakes (par. 178).
(2) *Spring leaf failures at spring eye.* Failures at this point are generally caused by tight spring shackles or frozen spring pins. Free up, lubricate, and adjust shackles, or replace spring (pars. 185 and 186).

(3) *Spring leaf failures at center section of spring.* Breakage of spring leaves at center bolt section are generally caused by loose spring U-bolts. Replace spring, and tighten U-bolts securely (pars. 185 and 186).

59. Steering Gear

a. General. Many complaints of steering difficulty are falsely charged to the steering gear assembly. In order, therefore, to isolate the steering gear from balance of front axle and connections, the steering drag link should be disconnected from steering arm at gear assembly (fig. 54). This will permit unobstructed diagnosis of the unit. In general, steering complaints rightfully traceable to steering gear are as indicated below.

b. Hard Steering.

(1) *Lack of lubricant.* Lubricate as instructed in paragraph 36.

(2) *Tight steering gear.*—Turn steering wheel from one extreme to the other. If tightness is felt, adjust steering gear (par. 193*c*).

(3) *Damaged bearings or internal parts.* If rough spots, bumps, or noise are encountered while turning steering gear, internal damage is indicated. Refer to ordnance maintenance personnel.

c. Wander or Weaving.

(1) *Steering gear parts worn or incorrectly adjusted.* Refer to ordnance maintenance personnel.

(2) *Steering drag link ends loose* (fig. 54). Inspect steering drag link ends for proper adjustment. Readjust if necessary (par. 190).

(3) *Tight adjustment in straight ahead position.* If gear is tight in mid position or straight ahead, adjust steering gear (par. 193*c*).

d. Oil Leaks.

(1) *Loose cover or gasket.* Tighten cover, or refer to ordnance maintenance personnel.

(2) *Defective oil seal in housing.* Refer to ordnance maintenance personnel.

SGV TD

60. Battery and Lighting System

a. Discharged Battery. If batteries repeatedly discharge, this may be caused either by generator or regulator malfunction (pars. 143 and 144). Other possible causes of battery discharge are as follows:

(1) *Loose or dirty terminals.* Clean and tighten terminals.

(2) *Electrolyte level low.* Replenish water to one-half inch above the separators.

(3) *Excessive resistance in cables.* Check voltage.

b. Lights Do Not Light.

(1) *Defective light switch.* Replace switch (par. 225).

(2) *Broken cable.* Locate broken cable and repair or replace.

(3) *Burned out lamps.* Replace sealed beam lamp unit (par. 196).

c. Frequent Lamp Failures.

(1) *Generator regulator out of adjustment.* Replace regulator assembly (par. 144).

(2) *Poor battery ground connection.* Clean and tighten ground connections.

d. Insufficient Light.

(1) *Poor ground.* Clean and tighten ground connections.

(2) *Discharged battery.* Recharge or replace battery (par. 195).

(3) *Loose terminals.* Isolate and tighten terminals.

61. Wheels and Tires

a. Wheel Wobbles.

(1) *Loose on hub.* Tighten wheel nuts.

(2) *Bent wheel.* Replace wheel (par. 204).

(3) *Front wheel bearings out of adjustment or damaged* (fig. 41). Adjust bearings (par. 158*a*) or replace bearings if necessary.

(4) *Wheel out of balance.* Remount tire correctly (par. 205*c*).

b. Excessive or Uneven Tire Wear.

(1) *Damaged wheel bearings, front.* Replace wheel bearings (pars. 158 and 171).

(2) *Bent wheel.* Replace wheel (par. 204).

(3) *Improper front wheel alinement.* Check front wheel alinement and correct (par. 165).

(4) *Unequal pressure in tires.* Inflate tires equally and properly (par. 205), using an accurate gage.

62. Winch (When Installed)

a. Winch Fails to Operate. Drum clutch not engaged (fig. 66). Operate drum clutch lever as described in paragraph 209.

b. Winch Fails to Operate Ppoperly. Lubricate as instructed in paragraph 208.

63. Radio Interference Suppression

a. Ignition System. Make sure ignition system is functioning properly (par. 50).

b. Generating Circuit. Check the circuit for defective wiring or loose connections. Check and tighten all generator, and generator regulator mounting bolts (pars. 143 and 144). Replace generator (par. 143) and regulator (par. 144), if necessary.

Section V. ENGINE DESCRIPTION AND MAINTENANCE IN VEHICLE

64. Description and Data

a. DESCRIPTION. The engine is a conventional 4-cylinder, L-head, gasoline unit (figs. 14 and 15). To facilitate major repairs, the engine, transmission, transfer, and radiator are designed so that they may be removed from the vehicle as a unit. This operation is covered in section VI. The engine has a waterproof electrical system and a sealed venting system for the carburetor, crankcase, and distributor, permitting underwater operation such as encountered in landing or fording movements.

b. DATA.

(1) Make and model	Willys MC.
(2) Bore and stroke	3⅛ x 4⅜ in.
(3) Displacement	134.2 cu in.
(4) Horsepower	60 at 4,000 rpm.
(5) Maximum torque	105 lb-ft at 2,000 rpm.
(6) Weights:	
Power plant unit	690 lbs
Engine, less accessories	333 lbs.
Engine, with accessories	549 lbs.
(7) Compression	110 psi at 160 rpm.
(8) Firing order	1–3–4–2.

65. Engine Tune-Up

a. Perform preventive maintenance and corrective operations listed in paragraph 42.

b. Remove spark plugs and clean. Adjust gaps (par. 138).

c. Test cylinder compression with gage. The gage must read more than 70 psi and the variation between cylinders remain less than 10 psi. Normal compression is approximately 110 psi at cranking speed. Report lack of compression to ordnance maintenance personnel.

d. Make sure that ground strap at engine left front support is in good condition and tight.

e. Remove distributor cap and rotor. Check for cracks and leaks. Clean or replace breaker points and adjust (par. 137*d*).

f. Check ignition timing (par. 136).

g. Check valve tappet clearance (par. 70).

h. Install spark plugs, assemble distributor, start engine, and allow to run until normal temperature is reached; then set idle speed adjusting screw (fig. 27) so that engine will idle at 600 rpm.

i. Adjust idle adjusting screw (fig. 27) until engine idles smoothly. If carburetor float level, accelerating pump, or metering rod require adjustment, notify ordnance maintenance personnel.

j. If necessary because of leakage, tighten cylinder head nuts, using torque wrench (par. 68*b*).

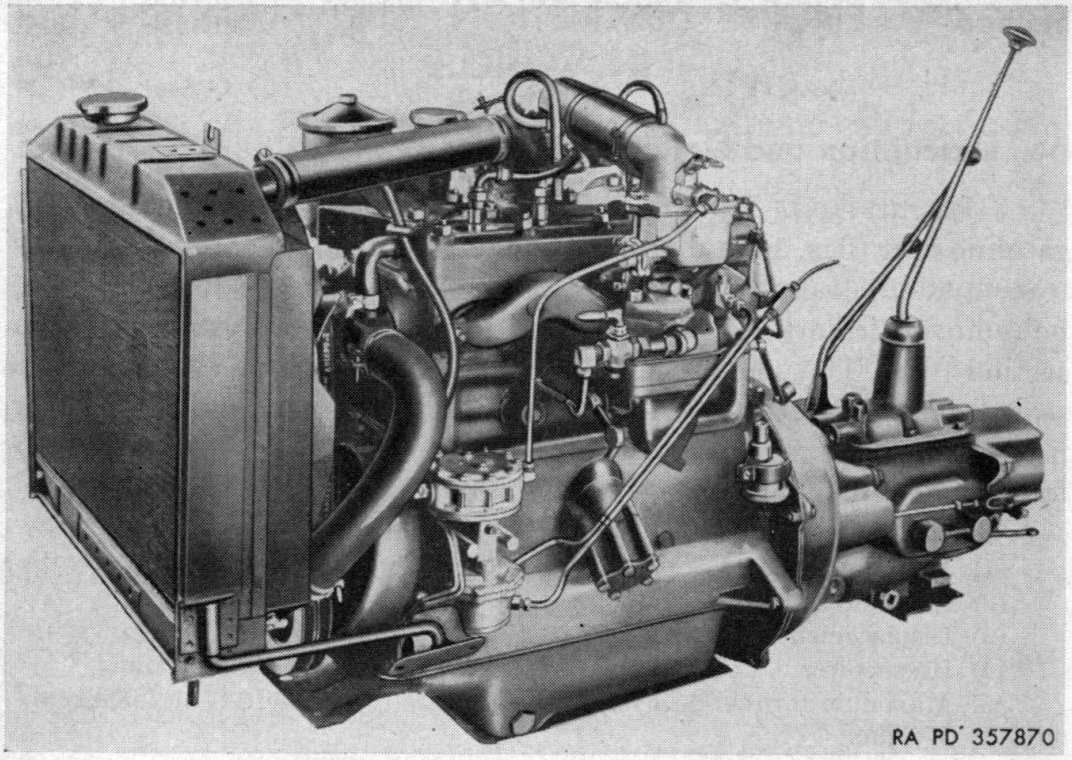

Figure 14. Power plant—left front view.

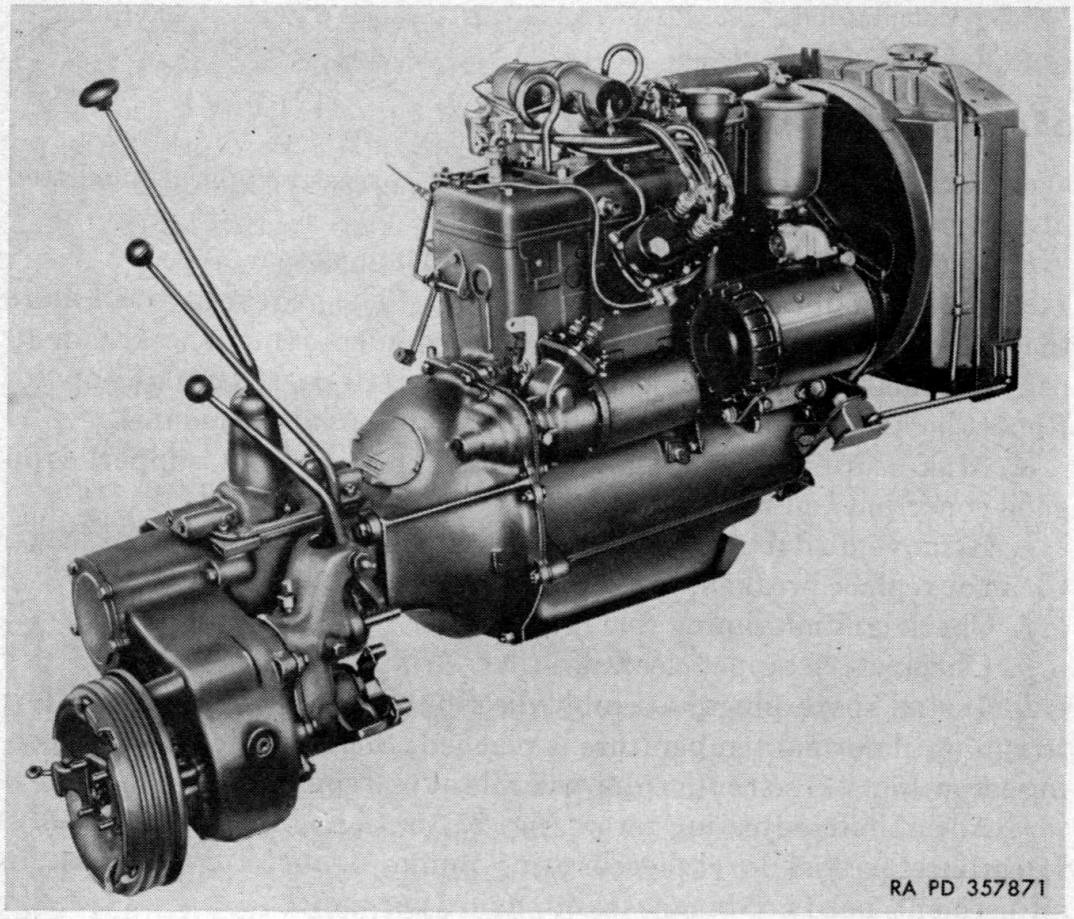

Figure 15. Power plant—right rear view

66. Intake and Exhaust Manifolds

a. Description. The intake and exhaust manifolds are attached to each other with four screws, making a unit in which a heat control valve is located to regulate the intake manifold temperature (par. 67).

b. Remove Intake and Exhaust Manifolds. Remove carburetor air hose at top of carburetor, and disconnect hand throttle, choke, and accelerator cables at carburetor. Remove carburetor vent tube (fig. 7). Loosen fuel line at fuel pump, and disconnect at carburetor. Remove two nuts attaching carburetor to intake manifold, and remove carburetor. Loosen the valve spring cover front screw to relieve any pull on crankcase ventilator tube, and then remove the tube. Disconnect exhaust pipe at the manifold. Remove all nuts and washers from manifold studs in cylinder block, remove manifolds as an assembly, and remove ventilator valve.

c. Separate Intake Manifold From Exhaust Manifold. Remove four screws holding intake and exhaust manifolds together, and remove intake to exhaust manifold gasket.

d. Assemble Intake Manifold to Exhaust Manifold. Attach intake manifold to exhaust manifold loosely, using a new gasket. Tighten screws only slightly until manifolds are installed on cylinder block. Install ventilator valve.

e. Install Intake and Exhaust Manifolds. Clean mounting surfaces of manifolds and cylinder block. Place new gasket on studs in cylinder block, and install manifold. Install washers and nuts with convex side of washers against manifolds, and tighten evenly (torque wrench reading 31 to 35 ft-lb). Tighten the four screws attaching intake manifold to exhaust manifold. Attach exhaust pipe to manifold, using new gasket, and tighten in place with nut and screw. Install ventilator tube, and tighten valve spring cover front screw. Install carburetor, accelerator clip, and spring. Attach fuel line at carburetor, and tighten at fuel pump. Connect accelerator rod, hand throttle, and choke at carburetor. Replace carburetor vent tube. Push controls in on instrument panel (throttle closed and choke fully open). Operate fuel pump priming lever to put fuel in carburetor, then start engine, and check for leaky gaskets.

67. Manifold Heat Control Valve

The heat control valve is controlled thermostatically by a bimetal spring. This valve diverts exhaust gases around the central portion of the intake manifold during the warm-up period of the engine.

Note. The Manifold heat control valve is an integral part of the exhaust manifold. For replacement, follow procedure outlined in paragraph 66.

68. Cylinder Head Gasket

a. Removal. Drain the cooling system by opening the drain cock under the radiator at the left front. If there is antifreeze in the cooling system, drain into a pan so it can be used again. Disconnect spark plug cables at the plugs, and remove distributor cap from distributor. Remove two nuts on cylinder studs holding air cleaner tube bracket, and remove bracket with spark plug cables and distributor cap. Remove radiator upper tube with hoses attached. Disconnect oil filter upper tube, remove two nuts holding filter to engine, and remove filter. Remove all cylinder head nuts. Remove cylinder head, taking care not to damage oil filler tube, and discard gasket.

b. Installation. Clean cylinder head, tops of pistons, and cylinder block thoroughly. Place cylinder head gasket in position on cylinder block.

Note. The front and rear center studs are pilot studs to correctly position the gasket.

Install cylinder head.

Caution: Do not damage oil filler pipe. Install oil filter, and air cleaner tube bracket. Install cylinder head nuts. Tighten cylinder head nuts evenly in proper sequence (fig. 16), using a torque-indicating wrench (tighten to 60 to 65 ft-lb torque). Connect oil filler tube and attach spark plug cables to correct plugs. Install radiator upper tube, tighten hose clamps, and close radiator drain cock. Fill the cooling system, giving due attention to antifreeze if required (par. 244, table IV). Start engine, and check cooling system for leaks. See that the coolant level has not gone down; replenish if necessary.

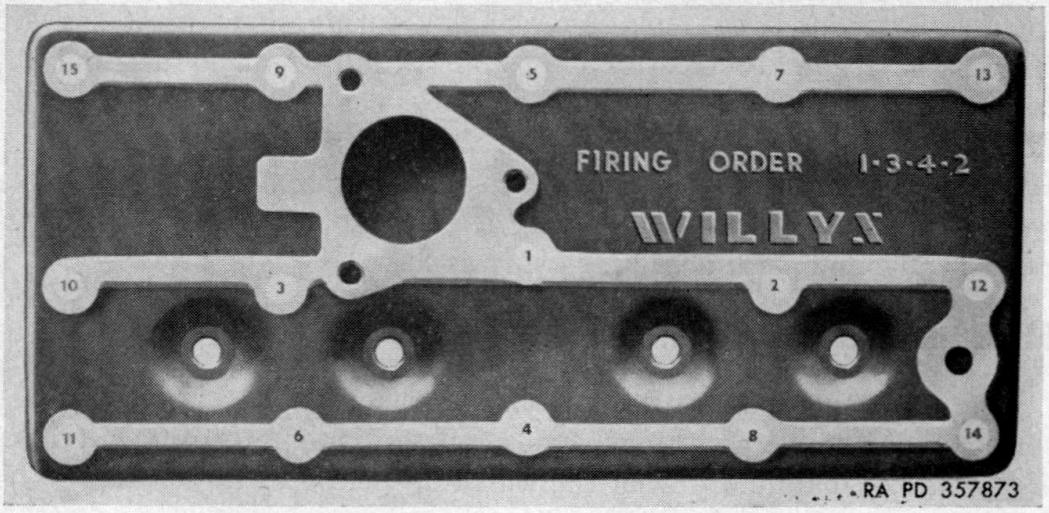

Figure 16. Cylinder head bolt tightening sequence.

69. Valve Cover

a. REMOVAL. Remove front valve spring cover bolt. Remove crankcase ventilator tube at ventilator valve, and remove tube and cap. Remove rear valve spring cover bolt, and slide valve spring cover forward, up, and out over the fuel pump. Discard the gasket.

b. INSTALLATION. Clean cover and gasket seat on cylinder block. Cement cork gasket to cover. Position cover on cylinder block by sliding it to the rear over fuel pump. Install cover rear screw and copper gasket, do not tighten. Install cover front screw and copper gasket, with ventilator cap, baffle, and gasket. Connect ventilator tube to valve, and tighten both cover screws evenly. Start engine and check for oil leaks.

70. Valve Tappet Adjustment

Remove the valve spring cover (par. 69). Adjust the self-locking tappet screws while they are cold (or warm) to 0.016 inch. Set tappet screws, starting with No. 1 cylinder on compression stroke at top center, then adjust valves in cylinder firing order (par. 64), turning the crankshaft one-half turn for each cylinder.

Note. The valve tappets will then be on the heel of the cam. After adjusting, replace valve spring cover (par. 69).

71. Oil Pan Gasket

a. REMOVAL. Drain oil by removing drain plug in lower left side of oil pan (fig. 12). Remove oil pan screws, exercising care not to lose spacers under fan belt guard. Remove oil pan, then remove gasket.

b. INSTALLATION. First clean oil pan thoroughly. Check condition of floating oil intake screen and if dirty, clean in volatile mineral spirits paint thinner. Clean face of oil pan and crankcase where gasket is installed, and cement gasket to oil pan.

Note. Always use new gasket.

Put oil pan in position, and install screws. Be sure that spacers under belt guard are in position, and tighten all screws evenly. Torque wrench reading must be 10 to 14-foot-lbs.

72. Oil Filter

a. GENERAL. The oil filter illustrated in this manual is the conventional design, cartridge-type filter, whereas the production vehicles will be equipped with a Cuno filter.

b. DESCRIPTION. The Cuno filter is a nonreplaceable-disk-type filter, consisting of base, filter unit, gasket, retaining ring and six bolts, lock washers and nuts. Oil entering the filter passes through a

stack of metal disks, which collect foreign matter before entering oil system.

c. Before-Operation Maintenance. Rotate the handle on top of filter several times to remove foreign matter.

d. Weekly Maintenance. Remove drain plug from bottom of base to allow accumulation of foreign matter to drain.

e. One-Thousand-Mile Maintenance or Crankcase Oil Change. Disconnect oil lines. Remove filter from bracket. Remove six nuts, lock washers and bolts securing filter unit to base and remove unit. Clean disks thoroughly in volatile mineral spirits paint thinner. Reassemble and install on vehicles. Connect oil lines and refill oil system.

73. Crankcase Ventilator Valve

a. Description. The crankcase ventilator valve (fig. 7) is located at the center of the intake manifold. This valve is spring-loaded, and is operated by the intake manifold vacuum. The valve is closed when the engine is idling (manifold vacuum high). When the engine speed is increased the manifold vacuum is lowered, and the valve opens to allow clean air to be drawn from the air cleaner tube through the engine oil filler pipe to ventilate the crankcase. If this valve fails to seat properly, an engine operating condition will occur similar to a leaky intake manifold.

b. Remove Valve. Loosen valve spring cover front screw. Remove ventilator tube at valve, and remove ventilator valve (fig. 18).

c. Installing Valve. Place ventilator valve in a vise and remove top. Clean the valve and seat. Be sure that spring operates freely, and reassemble valve. Install valve in manifold and attach tube. Tighten valve spring cover front screw.

Section VI. POWER PLANT REMOVAL AND INSTALLATION

74. Quick Removal Design

Both the vehicle and power plant, which includes the engine, radiator, clutch and bell housing, transmission and transfer case as a unit, are designed to provide removal of the power plant with a minimum of time and labor. Should other than minor engine adjustments be required, remove the entire power plant assembly. Remove power plant by following procedures outlined in paragraphs 75 through 95.

75. Disconnect Points

All disconnect points are painted yellow as a guide when removing the assembly.

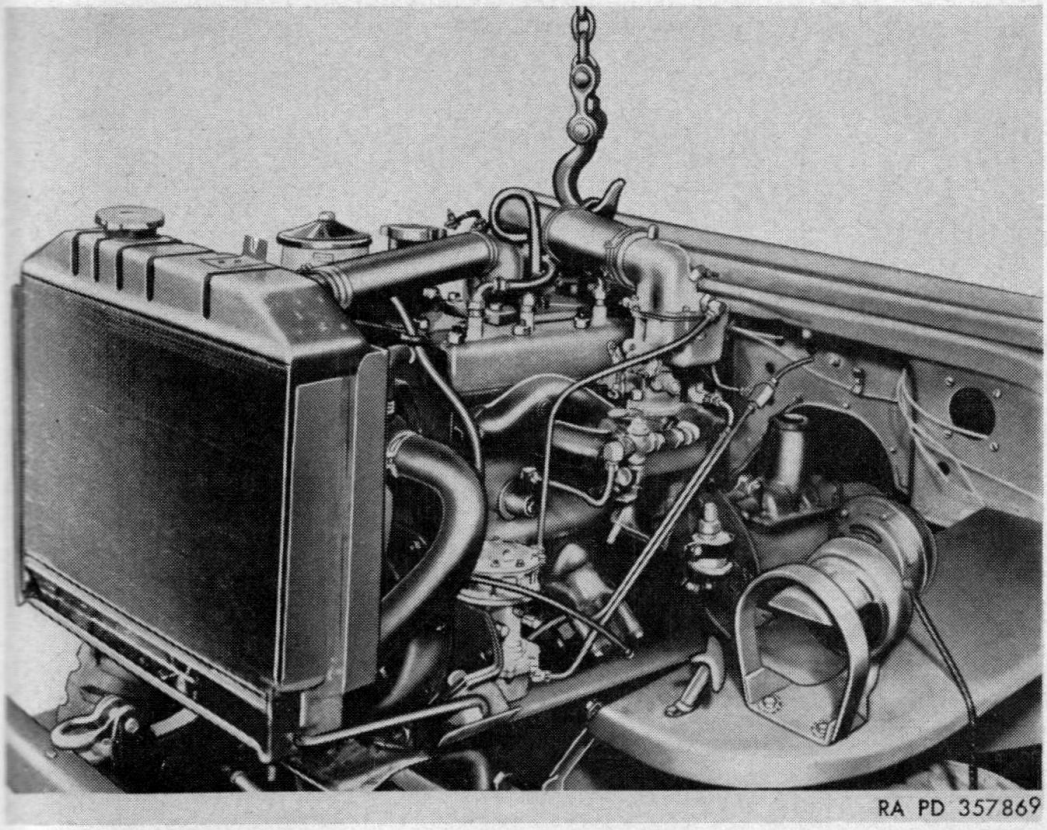

Figure 17. Removing power plant from vehicle.

76. General

Unhook the two hood clamps, raise the hood and lay against the windshield.

Disconnect the battery ground cable (par. 195*b*).

77. Disconnect Radiator Brace Rod

(Fig. 18)

Loosen retaining nut on radiator; remove brace rod from slotted bracket, swing rod out of position from pivot end and lay brace rod on cowl.

78. Remove Hinged Radiator Guard

Disconnect the three head light bayonet-type connectors at the left front head light. Loosen top bolt A (fig. 19), at each side of the radiator guard panel and loosen the two bolts B, on each side immediately below. Lay the radiator guard assembly forward on the bumper and remove from hinge sockets, C.

79. Disconnect Radiator From Frame Crossmember

Working from underneath, remove the two mounting nuts and lock washers which attach the radiator to the frame crossmember (fig. 20).

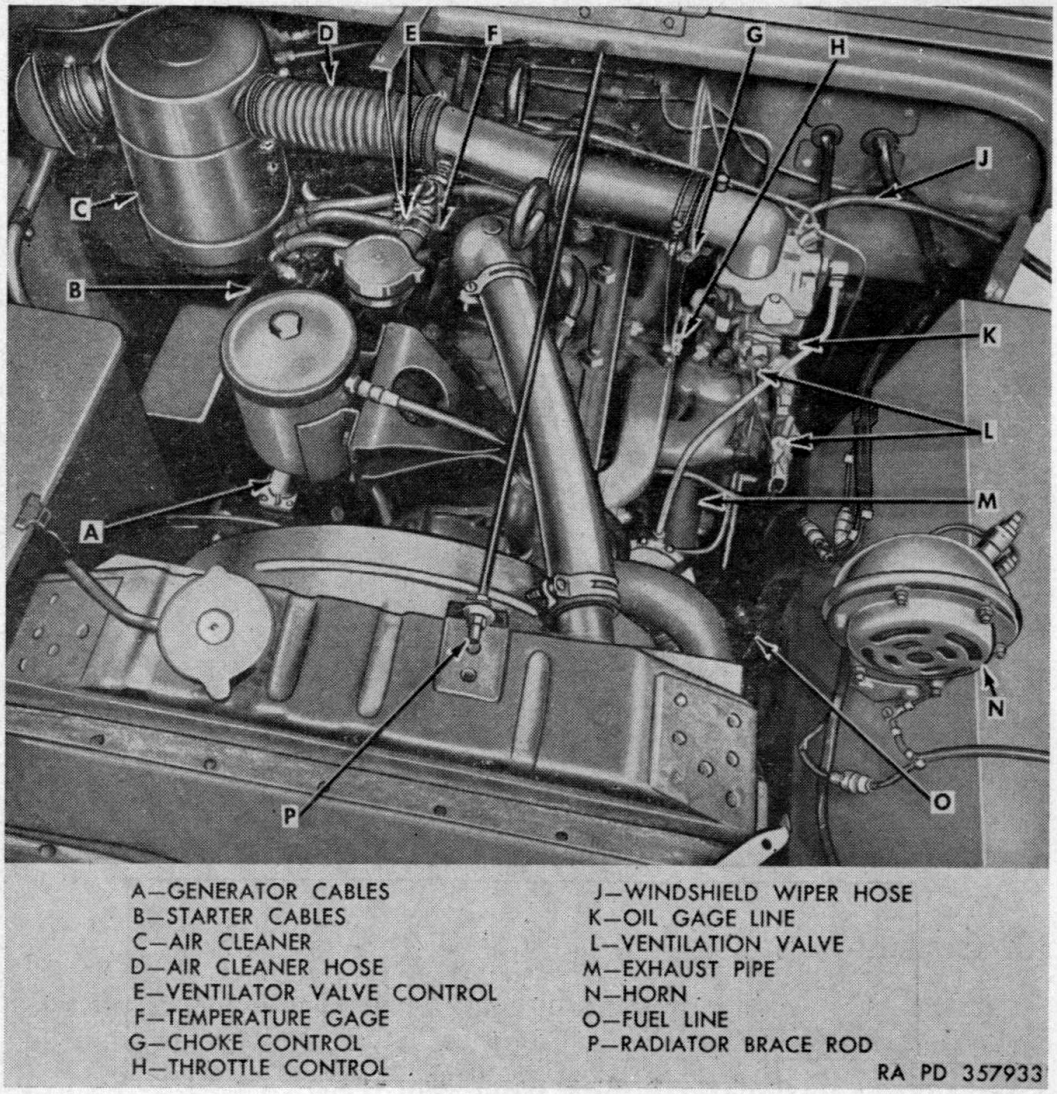

Figure 18. Engine compartment disconnect points.

80. Disconnect Oil Pressure and Water Temperature Gage Sending Unit Cables

Disconnect the oil gage cable (fig. 18) at the flexible oil line, located on the left-hand side of the engine. Disconnect the water temperature gage sending unit cable on the right-hand side of the cylinder head (fig. 18).

81. Disconnect Exhaust Pipe

(Fig. 18)

Remove the two nuts, bolts and lockwashers that secure the exhaust pipe to the intake manifold. Pry the exhaust pipe from the intake manifold.

82. Disconnect Fuel and Vacuum Lines

(Fig. 18)

Disconnect fuel line assembly from flexible hose connector and disconnect primer tube from primer tee on intake manifold. Disconnect windshield wiper hose from vacuum line.

83. Disconnect Choke Control

(Fig. 18)

Loosen the set screw on the carburetor choke control lever and remove the choke control cable. Disconnect accelerator from ball connection at floorboard (fig. 21).

84. Disconnect Ventilator Valve Control

(Fig. 18)

Remove the bolt and nut on the ventilating valve control bracket. Loosen the set screw on the ventilating valve mounted on the manifold and remove the ventilator valve control cable (fig. 18). Loosen the set screw on the ventilating valve directly to the rear of the oil filler tube and remove the ventilator valve control cable (fig. 6).

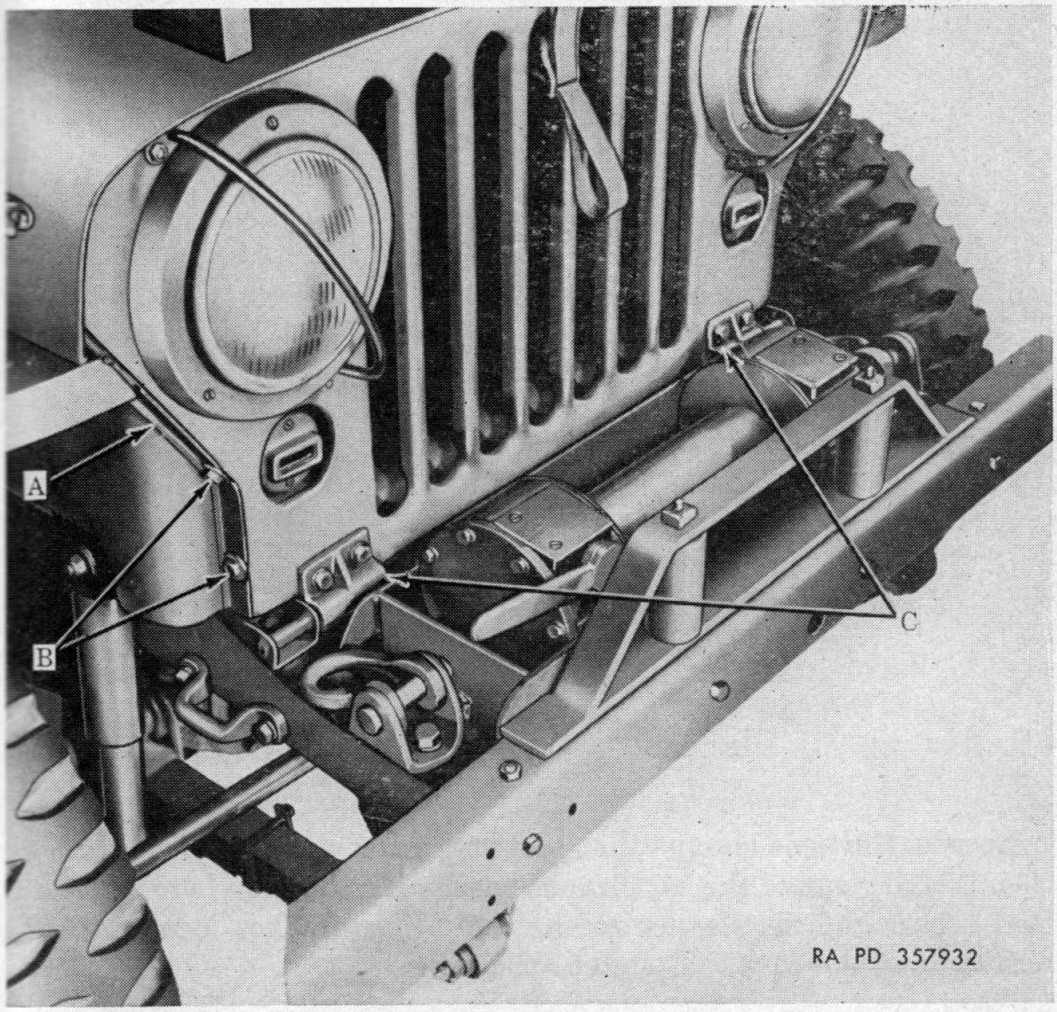

Figure 19. Radiator guard removal.

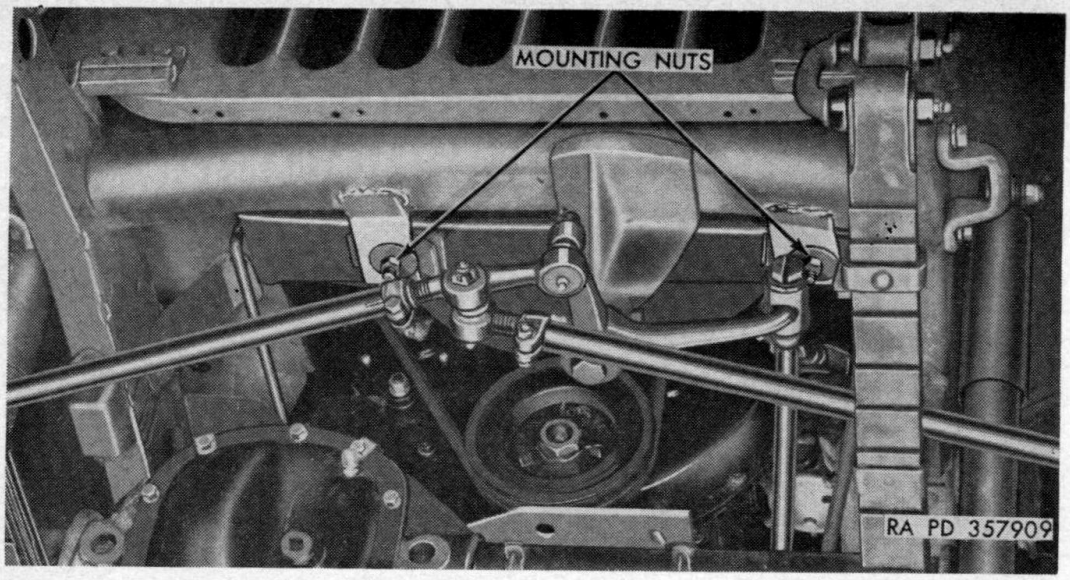

Figure 20. Radiator removal.

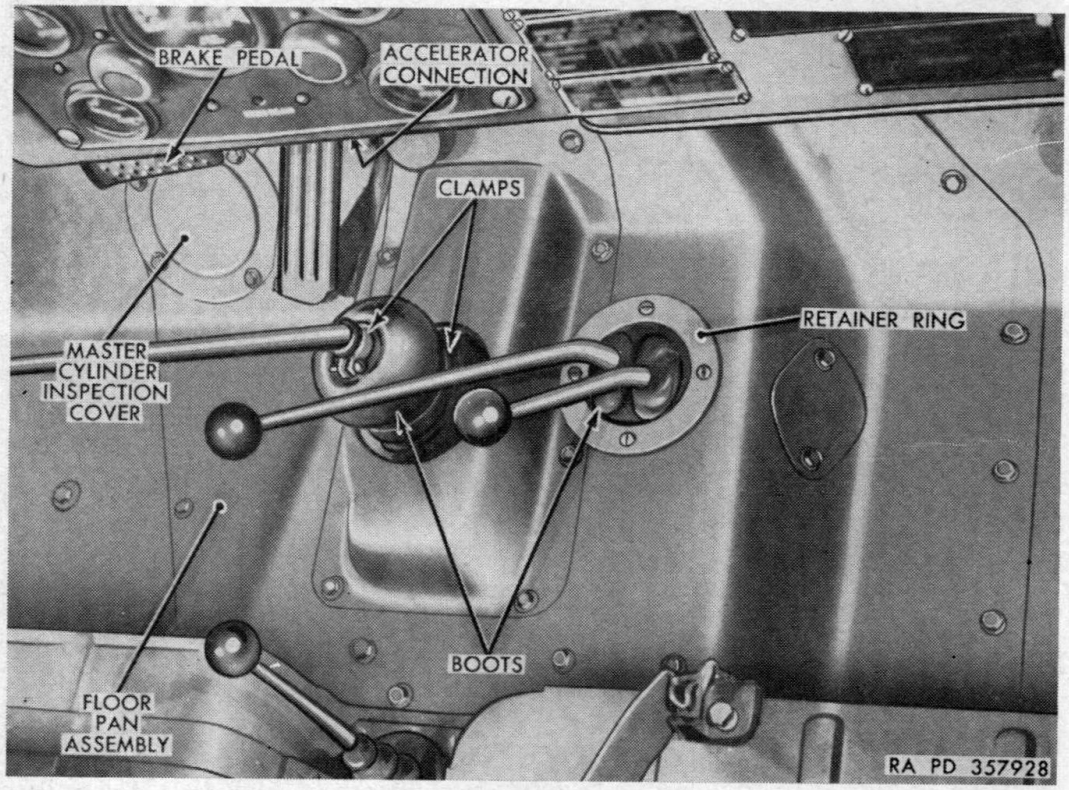

Figure 21. Floor plate mounting.

85. Remove Air Cleaner

(Fig. 18)

Loosen the hose clamps that secure the air cleaner hose at the air cleaner and remove the air cleaner hose. Remove the four wing nuts that secure the air cleaner to the mounting bracket located at the right side of the cowl. Remove air cleaner.

86. Remove Horn

(Fig. 18)

Remove the two nuts, bolts and lockwashers that secure the horn to the mounting bracket and lay horn to one side.

87. Disconnect Electrical Wires

(Fig. 18)

Disconnect the starter cable and the auxiliary power receptacle positive cable at the starter. Disconnect the field, armature, and ground cable by unscrewing the cable connector nut at the generator.

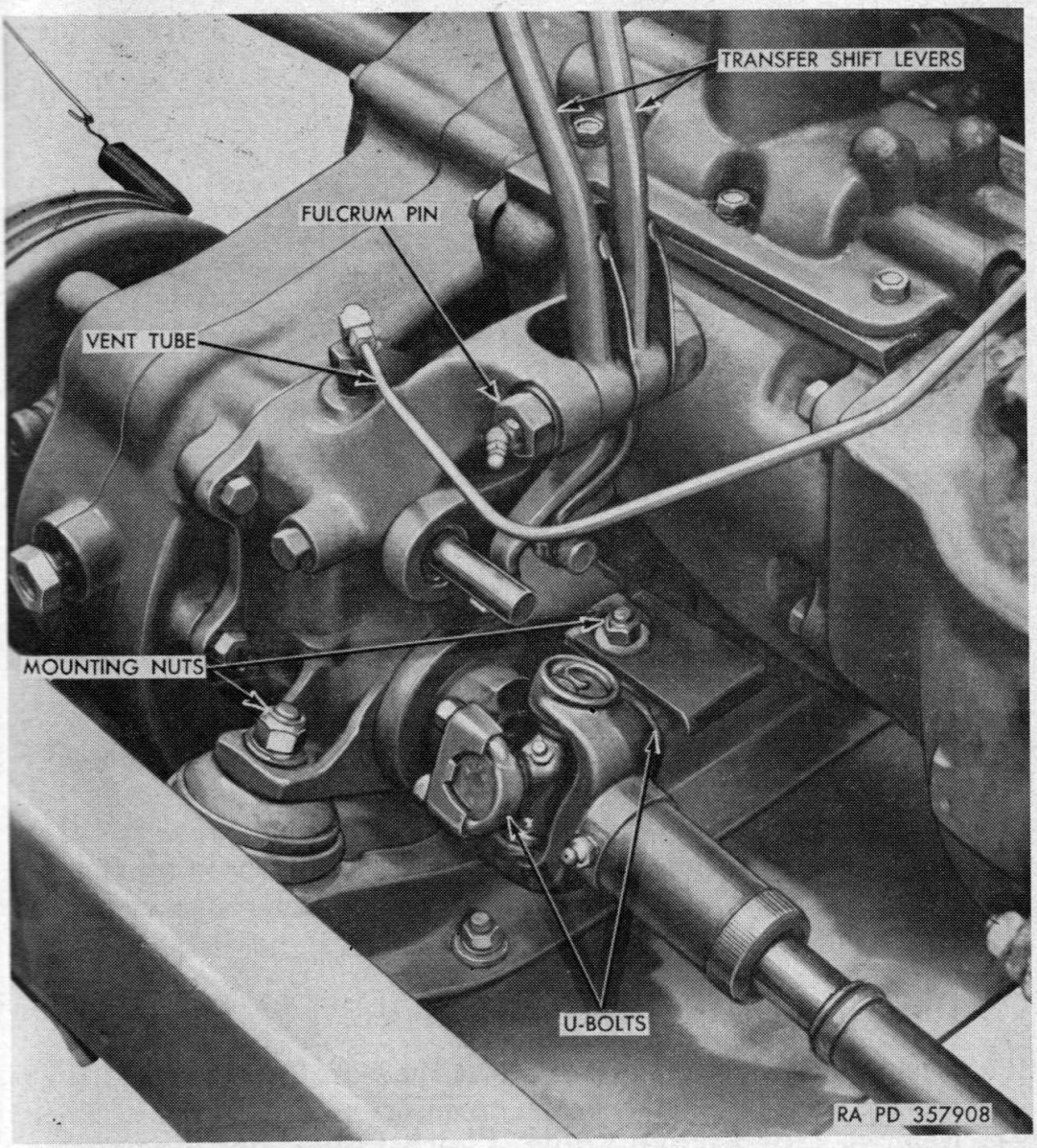

Figure 22. Disconnect points.

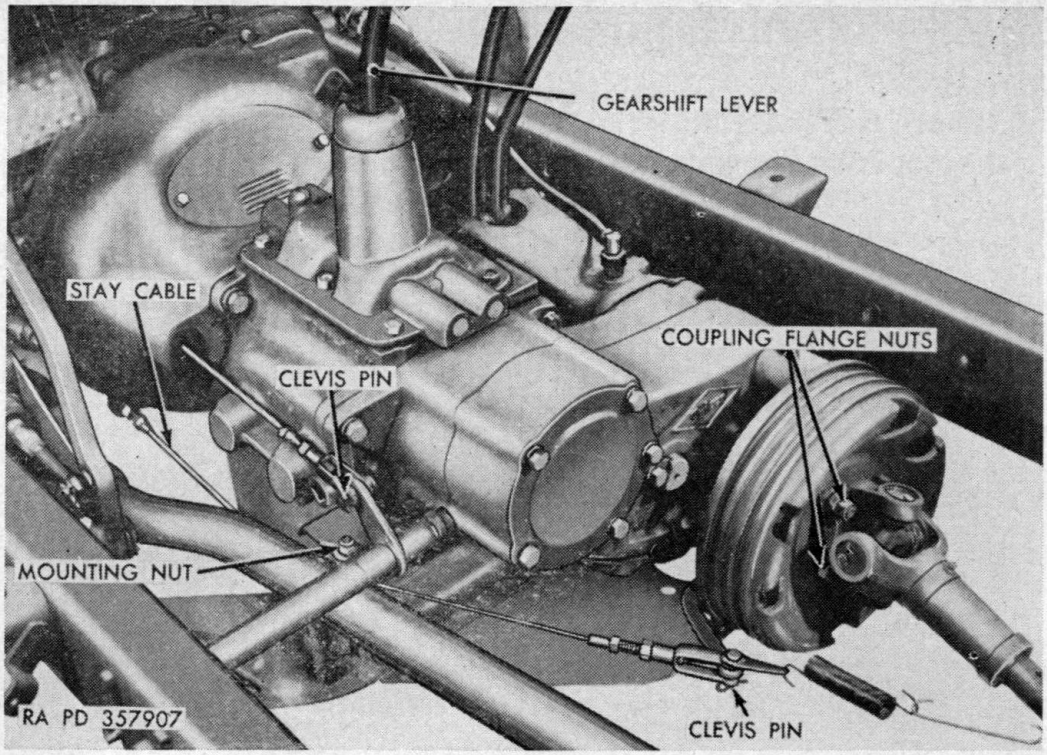

Figure 23. Disconnect points.

88. Remove Floor Plate and Shift Levers

(Fig. 21)

Remove the 24 cap screws and internal-toothed lock washers from the floor plate at the transmission and remove the floor plate assembly. Loosen clamps securing rubber boot to gear shift housing. Slide boot up and unscrew gear shift lever. Remove gear shift lever. Unscrew the fulcrum pin and remove the transfer case shift levers. Remove brake pedal.

89. Remove Front and Rear Propeller Shafts

(Figs. 22 and 23)

Remove the four bolts, nuts, and lock washers securing the propeller shaft driving flanges to the transfer case. Lay the end of the front shaft out by the right wheel.

90. Disconnect Speedometer

Disconnect the speedometer cable at the transfer.

91. Remove Hand-Brake Cable, Clutch Cable, and Engine Stay Cable

(Fig. 23)

Remove the clevis pin that secures the hand-brake cable to the hand-brake control lever at rear of transfer. Remove the hand-brake

cable clamp at the engine support plate. Disconnect the clutch cable at the clutch shaft. Loosen nut on each side of transfer to allow engine stay cable ball socket to slide freely and remove engine stay cable.

92. Attach Lifting Hook

(Fig. 17)

Install a suitable lifting hook in the rear lifting eyes mounted on the cylinder head. Place a slight strain on the lifting device.

93. Disconnect From Engine Supports

Remove the two nuts and bolts from each front engine support, allowing the mounting brackets to remain attached to the engine. When this operation is performed the engine ground strap at the right front engine support will be disconnected.

94. Disconnect Transmission From Frame

(Figs. 22 and 23)

Remove nut and flat washer securing right side of transmission and transfer to frame crossmember. Loosen nut on right and left side securing transmission and transfer to frame crossmember to permit assembly to slide to right for easy removal.

95. Remove Power Plant From Vehicle

Force the rear of the engine to the right to disconnect the clutch linkage at the ball stud. Lift the power plant and at the same time roll the vehicle back as necessary to remove the assembly (fig. 17).

96. Installation of Power Plant in Vehicle

Install power plant by following procedures in paragraphs 96 through 112. Install a suitable lifting hook in the front lifting eye, mounted on the cylinder block. Lift the power plant into the vehicle with a hoist, and lower the power plant until transmission and transfer rest on the frame crossmember. Force the rear of the engine to the left to connect the clutch linkage at the ball stud. Remove lifting hook.

97. Installation of Transmission to Frame

Install the transmission hold-down bolt, nut, and lock washer securing the right side of transmission and transfer to the frame crossmember. Tighten the remaining two nuts on the right and left sides of the transmission, noting that the slotted brackets are secure. Tighten the two hold-down bolts in each front engine support mounting bracket.

98. Installation of Hand-Brake Cable, Clutch Cable, and Engine Stay Cable

Slide the stay cable through the bracket on the engine rear plate (fig. 23) and into the ball socket connection. When tension is even, tighten the bolts. Install the clevis that secures the clutch release fork cable to the clutch shaft. Install the clevis pin that secures the hand-brake cable to the hand-brake control lever at rear of transfer. Install the cap screw that secures the hand-brake cable clamp to the engine support plate.

99. Installation of Speedometer

Connect the speedometer cable at the transfer.

100. Installation of Front and Rear Propeller Shafts

Install and tighten the four bolts, lock washers, and nuts that secure the propeller shaft driving flanges to the transfer.

101. Installation of Floor Plate and Shift Levers

(Fig. 21)

Hold the transfer shift levers in place and secure with fulcrum pin. Insert the gear shift lever, gear shift lever spring, and lever spring washer into the gear shift housing. Tighten the control housing cap. Slide rubber boot down into position on gear shift housing and tighten the 24 cap screws and internal-toothed washers.

102. Installation of Electrical Cables

(Fig. 18)

Connect the starter cable and the auxiliary power receptacle positive cable to the starter, by means of the cable connectors. Connect the field, armature, and ground cable by tightening the cable connector nut at the generator.

103. Installation of Air Cleaner

(Fig. 18)

Place the air cleaner in position on the mounitng bracket, and secure the four wing nuts in place. Slide the air cleaner hoses onto the metal tubes and tighten the hose clamps.

104. Installation of Horn

(Fig. 18)

Place the horn in position on the horn mounting bracket and secure with two nuts, bolts, and lock washers.

105. Installation of Ventilator Valve Controls

(Fig. 18)

Slide the valve control cables and conduit through the hold down brackets, and the valve control cables through the collars on the valve control arms. Push in the valve control handle on the instrument panel. Pull the valve control levers forward as far as possible, and tighten the set screws in the collars. Tighten the bolt and nut securing the ventilating valve control bracket.

106. Installation of Choke and Throttle Controls

(Fig. 18)

Slide the choke control cable and conduit through the choke lever carburetor bracket assembly on the carburetor, and the choke control cable through the collar on the choke lever. Push in the choke control button on the instrument panel. Pull the choke lever forward as far as possible, and tighten the set screw in the collar. Connect the throttle control cable and conduit to the choke lever carburetor bracket assembly with the carburetor air cleaner clamp, nut, and bolt. Run the throttle control cable and conduit to the left of the carburetor choke link and the carburetor. Run the throttle control cable through the carburetor throttle shaft arm and the screw assembly. Push the throttle control cable on the instrument panel all the way in. Tighten the screw on the carburetor throttle shaft arm.

107. Installation of Oil Pressure and Water Temperature Sending Unit Cables

Connect cable to the water temperature gage sending unit at the right-hand side of the engine (fig. 18). Connect the oil pressure gage cable at the flexible oil line on the left-hand side of the engine.

108. Installation of Radiator to Frame Crossmember

(Fig. 20)

Install the two carriage bolts in the bottom of the radiator. Install and tighten a lock washer and nut on each bolt.

109. Installation of Hinged Radiator Guard

(Fig. 19)

Place radiator guard on front bumper and slide into hinge sockets. Raise radiator guard to proper position and install the top bolt on each side of radiator guard panel. Tighten the remaining two bolts on each side of radiator guard grill and connect the three headlight cable connectors at left headlight.

110. Installation of Radiator Brace Rod
(Fig. 18)

Install radiator brace rod in slot on rear of radiator and tighten wing nut securing brace rod.

111. Installation of Batteries

Set the batteries in the battery boxes with the negative post toward the front of the vehicle. Install the battery hold-down frame, wing nuts and ground cable. Close cover.

112. Final Operations

Make sure the radiator and engine drain cocks are closed, and install the specified coolant. Tighten the oil pan drain plug and install the specified amount and grade of oil. Start the engine. If oil pressure does not register immediately on the oil pressure gage, stop the engine. Remove the oil pump relief valve retainer and prime the oil pump.

Section VII. ENGINE REMOVAL AND INSTALLATION

113. Coordination With Ordnance Maintenance Unit

Replacement of the engine with a new or rebuilt engine is normally an ordnance maintenance operation, but may be performed in an emergency by the using organization, provided authority for performing this replacement is obtained from the appropriate commander. Tools needed for the operation which are not carried in the using organization may be obtained from the supporting maintenance unit.

114. Removal

a. General. Removal or replacement of the engine requires power plant removal.

b. Remove Power Plant. Refer to paragraphs 74 to 95.

c. Remove Transmission. Refer to paragraph 147.

d. Remove Clutch. Refer to paragraph 120.

e. Remove Radiator. Drain the coolant from the radiator. Loosen the two front outlet radiator hose clamps and slide the hose back on the metal tubing. Loosen the rear radiator outlet hose clamp, and remove the hose. Loosen the radiator hose clamps on the inlet hose at the water pump, also the one on the radiator and remove the radiator inlet hose. Lift radiator from pins.

115. Installation

a. General. All cables, connections, parts and accessories which were removed from the vehicle with the engine being replaced, and which were not furnished with the new or rebuilt engine must be

removed from engine being replaced and installed on the new or rebuilt engine being used before installation into the vehicle.

b. INSTALL RADIATOR. Insert radiator retaining rods on right and left sides of radiator. With the help of an assistant, insert the radiator retaining rods in corresponding slots on engine. Slide the radiator hoses in place on the engine, and radiator, and tighten hose clamps.

c. INSTALL CLUTCH. Refer to paragraph 120.

d. INSTALL TRANSMISSION. Refer to paragraph 148.

e. INSTALL POWER PLANT. Refer to paragraphs 96 to 112.

f. FILL COOLING SYSTEM. Fill cooling system with proper amount of coolant (par. 134).

g. RECORD OF REPLACEMENT. Make a record of the replacement on WD AGO Form 478.

Section VIII. CLUTCH

116. Description

The clutch, located between the engine and the transmission is a single plate, automotive type, composed of two major units, the pressure plate assembly, and the driven plate or disk. The controlled pressure of the driven plate against the flywheel provides a means of engaging and disengaging the engine power with the transmission. The clutch is always in "engaged" position, unless deliberately "disengaged" by the driver. The pressure plate assembly is adjusted at the factory, and requires no other adjustments.

117. Maintenance

Pedal adjustment must be periodically checked, due to the natural wear of lining. Report grabbing or slipping condition of clutch to higher authority.

118. Adjustment

a. ADJUSTMENT CHECK. The clutch pedal must have a free pedal travel of at least 1¼ inch before the clutch starts to disengage (fig. 24).

b. ADJUSTMENT. Loosen clutch control cable adjusting yoke lock nut (fig. 25). Using a wrench, unscrew cable until clutch pedal has a 1¼ inch free play. Tighten lock nut.

119. Controls and Linkage

a. GENERAL. Clutch pedal is connected to clutch control lever through the linkage.

b. REMOVAL. Disconnect clutch pedal return spring. Remove pedal clamp bolt (fig. 25), and remove clutch pedal from shaft. Remove two bolts, lock washers and nuts securing frame bracket. Remove clevis yoke pin and remove control tube and lever.

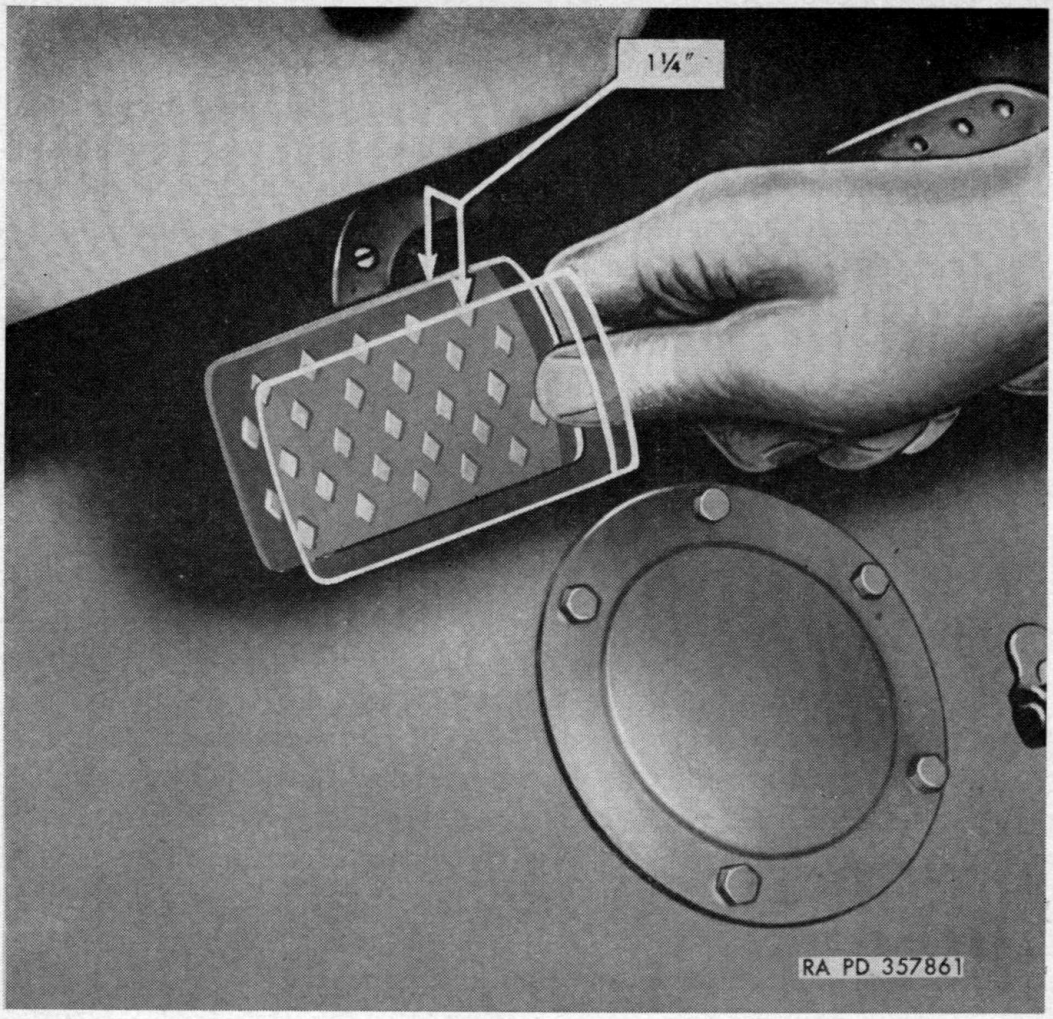

Figure 24. Clutch pedal adjustment.

c. INSTALLATION. Install control tube and lever. Install two bolts, lock washers, and nuts securing frame bracket. Install clutch control rod assemblies. Install clutch pedal to shaft and secure pedal clamp bolt. Insert pedal pad and shank through floor board and secure at pedal pad clamp bolt. Connect clutch pedal return spring. Adjust clutch pedal free travel (par. 118).

120. Clutch Replacement

a. COORDINATION WITH ORDNANCE MAINTENANCE UNIT. Replacement of the clutch with a new or rebuilt clutch is normally an ordnance maintenance operation, but may be performed in an emergency by the using organization, provided authority for performing this replacement is obtained from the appropriate commander. Tools needed for the operation which are not carried in the using organization may be obtained from the supporting ordnance maintenance unit.

b. REMOVAL. Removal or replacement of the clutch requires prior removal of the power plant.

(1) *Remove power plant.* Refer to paragraphs 74 to 95.

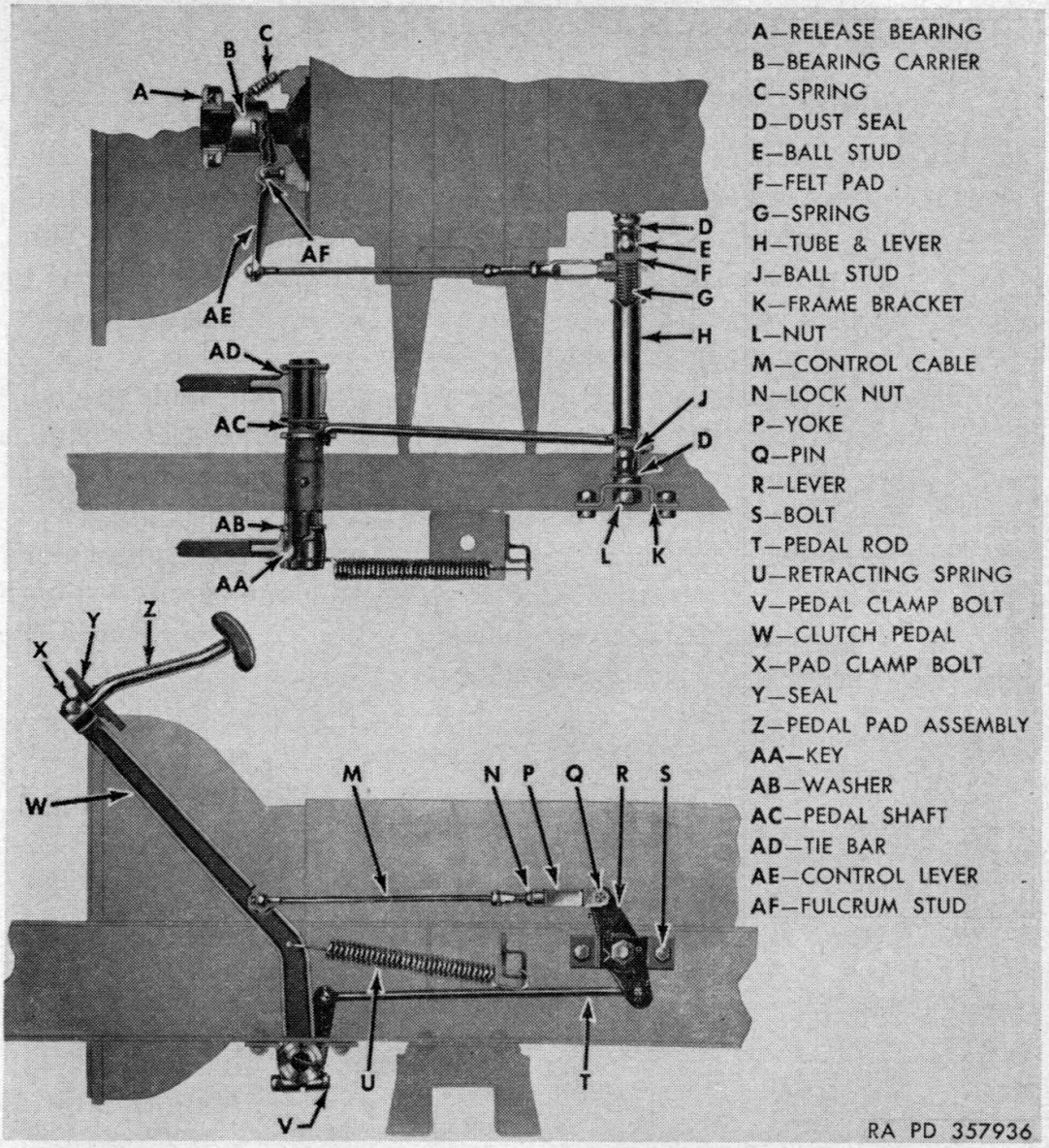

Figure 25. Clutch linkage.

(2) *Remove transmission.* Refer to paragraph 147.

(3) *Remove clutch.* The clutch release bearing is accessible when the transmission has been removed. Remove six bolts and lock washers holding clutch cover plate assembly to flywheel and remove cover plate assembly. Remove clutch driven disk assembly.

c. INSTALLATION.

(1) *Install clutch.* Place clutch driven disk assembly against flywheel, and install a clutch pilot tool in the flywheel and disk. Tighten each bolt gradually, a turn at a time, until all are tightened securely. Withdraw pilot tool.

(2) *Install transmission.* Refer to paragraph 148.

(3) *Install power plant.* Refer to paragraphs 96 to 112.

(4) *Adjust clutch-pedal free travel.* Refer to paragraph 118.

Section IX. FUEL SYSTEM

121. Description and Data

a. DESCRIPTION.

(1) *General.* The fuel system (fig. 26) consists of a fuel tank, fuel pump, carburetor, air cleaner, and connecting lines. The most important attention necessary to the system is to keep it clean and free from water and foreign matter. Periodic checks should be made for leaks.

(2) *Air cleaner.* The air cleaner is an oil-bath unit specially adapted for underwater use. The inlet and outlet openings are made for connection of tubes by clamps. Other openings for certain vent lines are provided (fig. 26).

(3) *Carburetor.* The carburetor is a special waterproof unit sealed at the control and adjustment connections through the housing. The float chamber is vented by a tube to the air cleaner to carburetor tube (fig. 27).

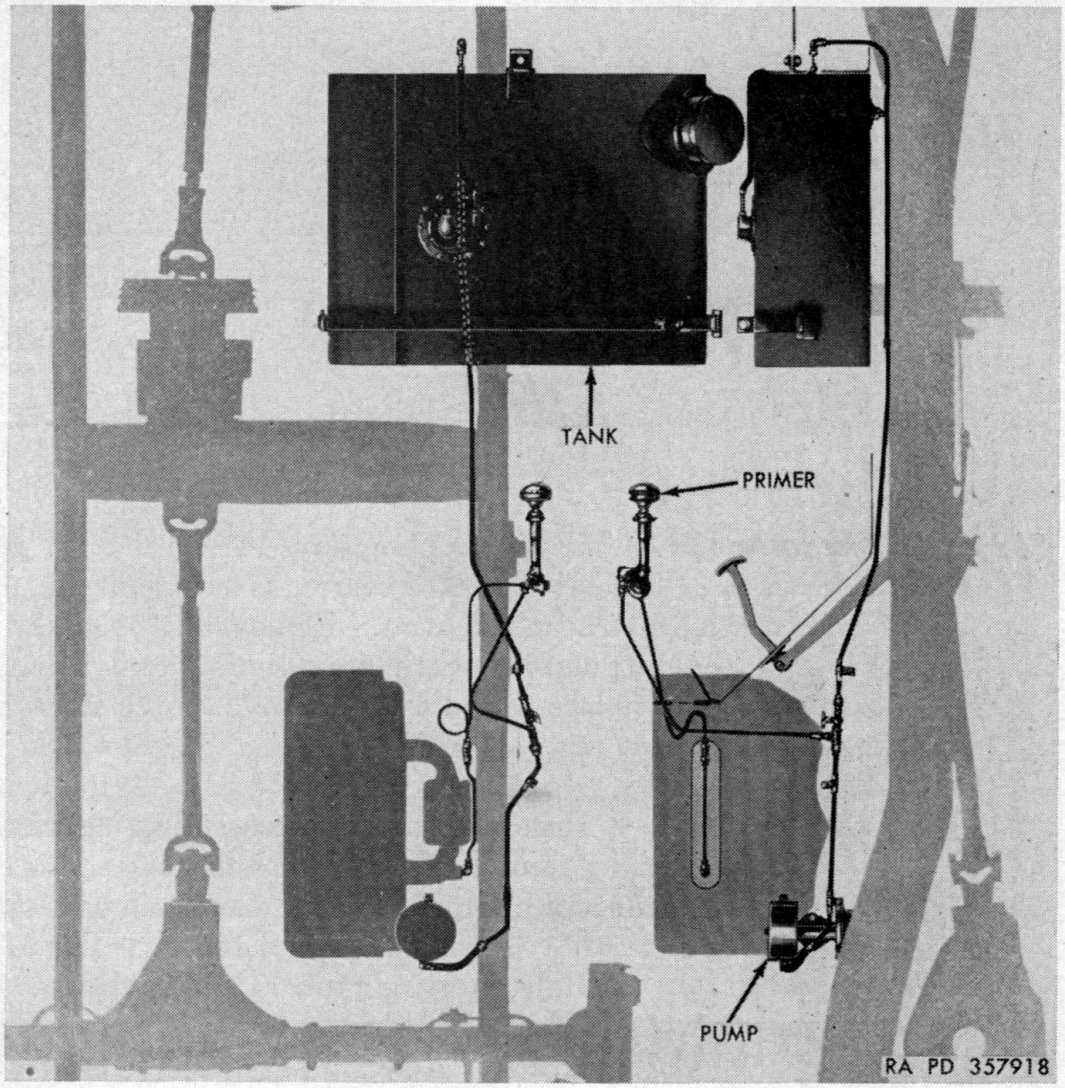

Figure 26. Fuel system.

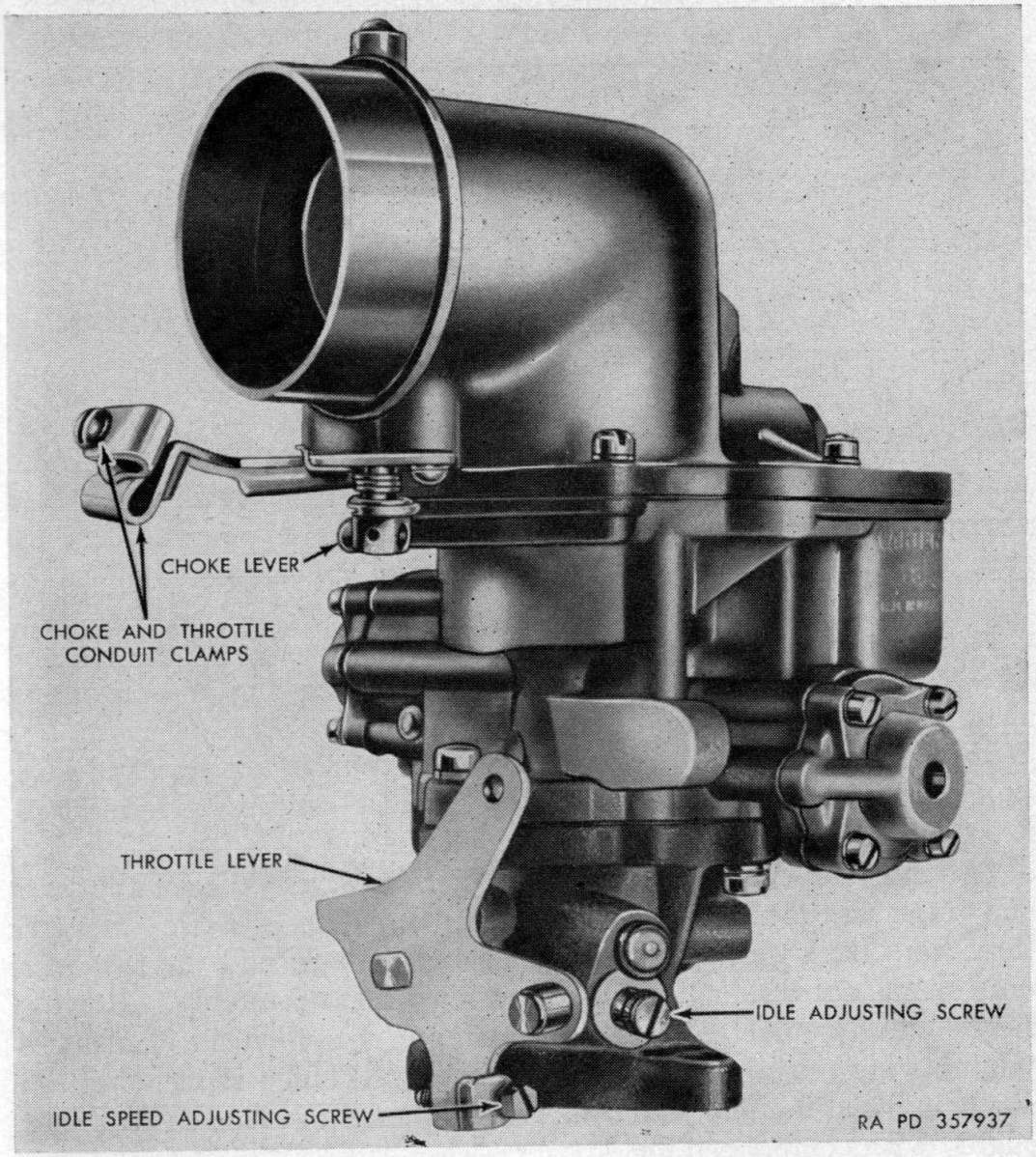

Figure 27. Carburetor.

(4) *Fuel pump.* This is a combination fuel pump and vacuum booster. The unit operates from the camshaft at the front left side of the engine. The vacuum pump provides a more constant vacuum for windshield wiper operation when engine is under load.

b. DATA.

(1) *Air cleaner.*

Make and model	Oakes X–615980.
Type	Oil bath.
Oil capacity	1¼ pints.
Ordnance number	7047962.

(2) *Carburetor.*

Make and model	Carter YS 637S.
Flange size	1¼ inch.
Type (waterproof)	Downdraft.

(3) *Fuel pump.*

Make and model	AC–GP16228.
Type	Camshaft drive.
Pressure	4 to 5¼ psi @ 16 inches above outlet @ 1,800 rpm.
Vacuum	10 inches mercury @ 200 rpm, 12 inches mercury @ 1,500 rpm.

(4) *Fuel tank.*

Capacity	13 gallons.
Location	Under driver's seat.
Filler opening	Left side.

122. Air Cleaner

a. SERVICING. For efficient operation, the cleaner must be serviced at regular intervals according to conditions of vehicle operation. Such services consist of cleaning the element and replacing the oil in the reservoir.

b. REMOVAL OF OIL CUP. Hold one hand under the cup and unclamp the two retaining clamps. Remove the cup and clean and refill.

c. INSTALLATION OF OIL CUP. Place the cup in position and push up into place. Make sure the gasket is in good condition and in place. Lock the cup in place with the two clamps.

d. REMOVAL AND SERVICING OF AIR CLEANER. Loosen the inlet and outlet air tubes and two wing nuts at the center of dash, Remove three vent lines (fig. 9) at the air cleaner fittings, and the two wing nuts on the outer side of cleaner, and lift out the assembly. Remove the oil cup by unfastening the two clamps. Unscrew the element retaining wing nut and remove the element. Plunge element up and down in volatile-mineral-spirits paint thinner to cleanse; dry thoroughly with compressed air.

e. INSTALLATION. Install the element and secure with retaining nut. Replace gaskets and clamp refilled oil cup in place. Mount the cleaner on the dash brackets with the four wing nuts. Install the three vent lines (fig. 7) and the air inlet and outlet connections.

123. Carburetor

a. ADJUSTMENT. Low speed or idle adjustment is accomplished by just seating the idle adjustment screw (fig. 27) and opening between one and two turns, making final setting with a warm running engine. The idle speed can be set to about 600 rpm with idle speed screw on throttle lever (fig. 27). Should the accelerator linkage need adjusting, the treadle should be set to just strike the toe board, with the throttle wide open, by adjusting block screw (fig. 28).

b. REMOVAL. Disconnect throttle and choke controls (fig. 28). Remove air tube by loosening clamp and remove the vent tube (fig. 7).

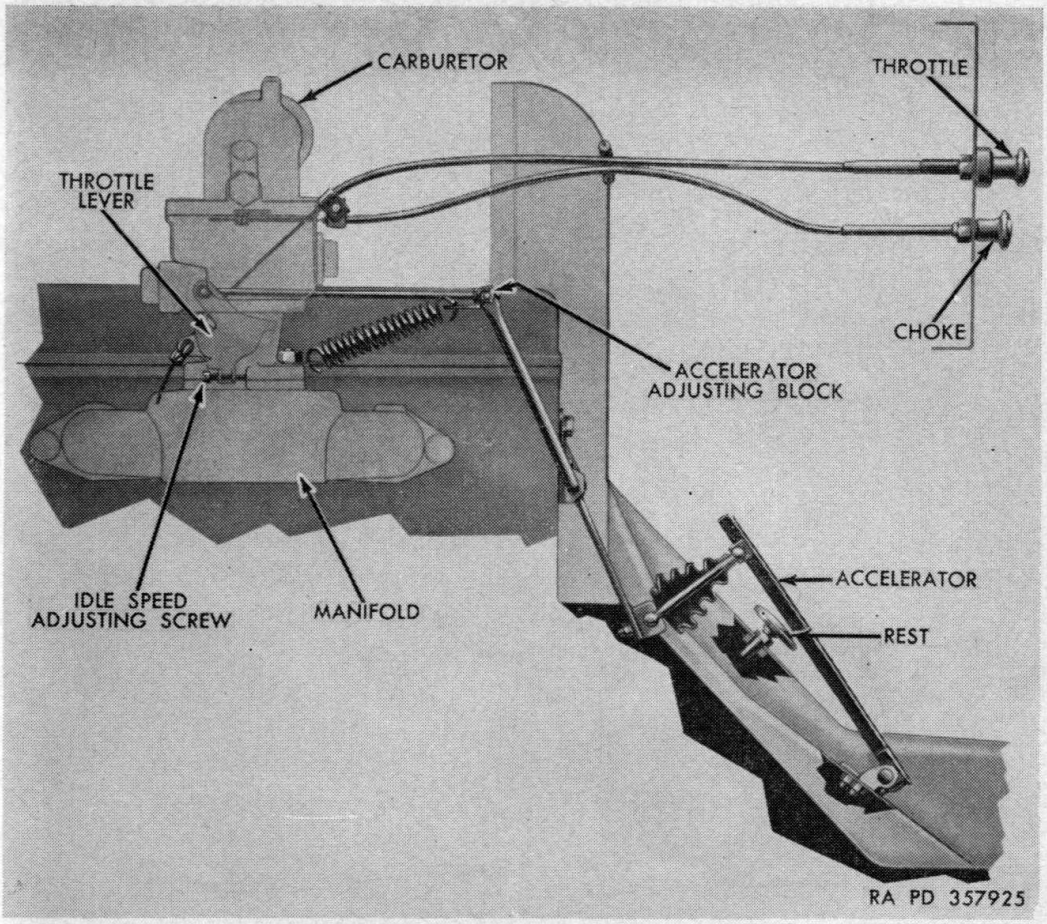

Figure 28. Accelerator and choke linkage.

Disconnect the fuel line at the carburetor. Remove the two flange nuts and lift off the carburetor.

c. INSTALLATION. Set flange gasket over studs on manifold and set on the carburetor. Secure with the two mounting nuts and washers. Connect the air tube, vent line, gas line, and choke and throttle controls (fig. 28). Make idle adjustment and accelerator inkage adjustment (*a* above).

124. Fuel Tank

a. REMOVAL. First take out the driver's seat by removing the four bolts securing it to the floor pans and left wheelhousing. Remove the short fuel line at the tank and elbow under the rear floor pan (fig.26). Disconnect vent line at top of tank (fig. 26), and fuel gage connections. Remove rear hold-down strap by taking out bolt to rear floor, and forward hold-down strap by parting clamp (fig. 26), and remove tank.

b. INSTALLATION (fig. 26). Set the tank in place, inserting the filler neck through the rubber grommet in the vehicle side. Hook the two halves of the forward hold-down strap to their anchors and clamp together on top of the tank. Hook the rear hold-down strap and secure to the rear floor. Attach the fuel gage wire, the vent line fit-

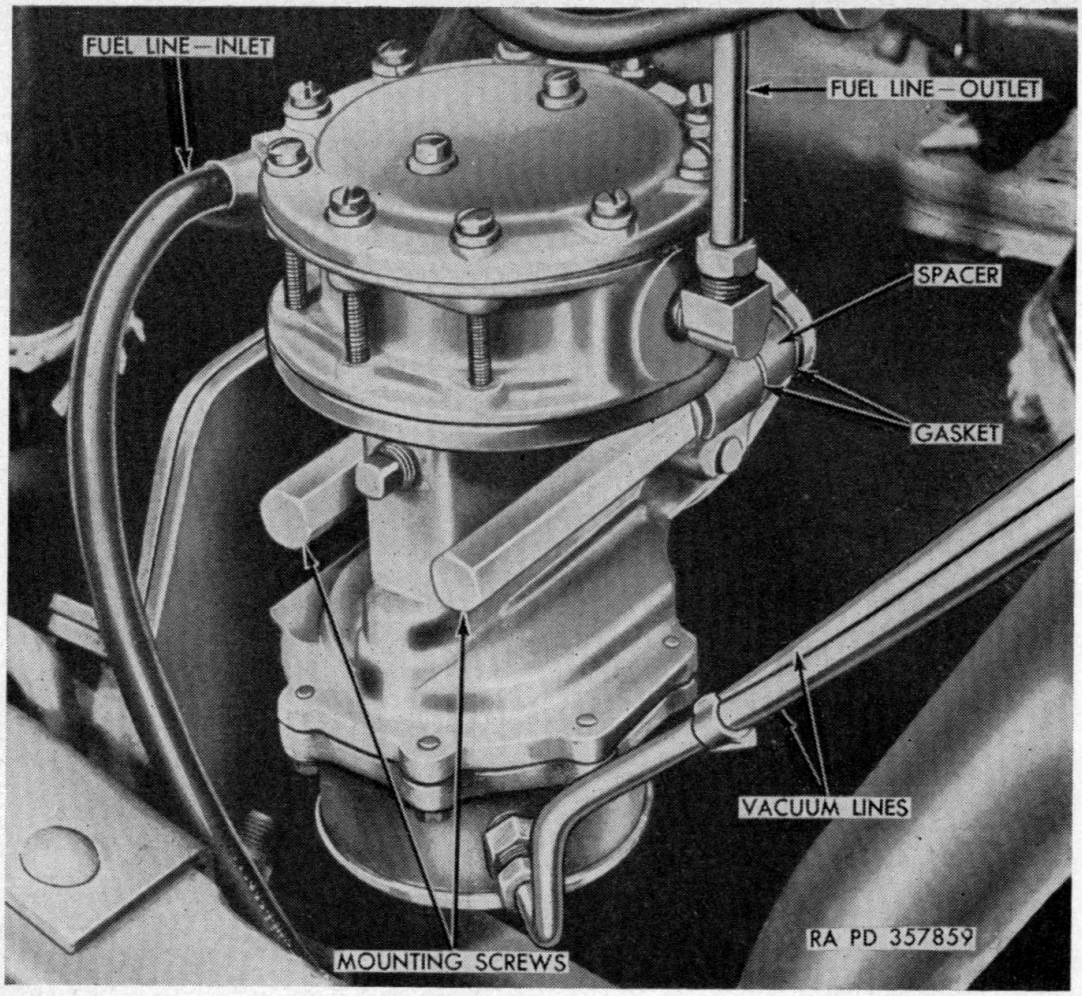

Figure 29. Fuel and vacuum pump.

ting, and replace the short fuel line. Replace the driver's seat, securing it with the four mounting bolts.

125. Fuel Pump

a. Removal. Disconnect the two vacuum lines from the bottom portion and two fuel lines from the upper portion of the pump (fig. 29). Remove the two mounting screws and lift off the pump. Two gaskets and a spacer will be found between the pump and cylinder block.

b. Installation. Insert mounting screws in the mounting holes of pump and set the spacer with a gasket on each side over the bolts. Place in position against the cylinder block and tighten down the bolts. Connect the two vacuum lines and two fuel lines (fig. 29).

Section X. EXHAUST SYSTEM

126. Description

The exhaust system consists of the exhaust pipe, exhaust pipe extension, and muffler. The two piece exhaust pipe fastens to the exhaust manifold flange and extends to the muffler. One strap support is located at the rear-intermediate frame cross-member. The muffler

mounts to the exhaust pipe flange and extends diagonally between the last two cross-members. The tail pipe is part of the muffler. A single support is fastened to the rear member. A flanged end on the tail pipe provides for the fastening of an extension when desired for fording operations.

127. Removal

The manifold connection is a two-bolt flange while the other connections are three-bolt flanges. All flanges have gaskets. Removal of any component is readily made by disconnecting the flanges and removal of the support straps from the cross-members.

128. Installation

In making installation of exhaust system parts, be sure new gaskets are used at all flanges and that the flanges are alined and tightened securely to prevent leakage.

Section XI. COOLING SYSTEM

129. Description and Data

a. Description.

(1) *General.* The cooling system (fig. 30) consists of the raditor with pressure type cap, water pump, fan, and thermostat. The system is sealed and operates under pressure when engine is warmed up. The system features full length water jackets in cylinder block and a by-pass tube from the water pump to cylinder head. There are two drain cocks for draining the system. One at the bottom of the radiator and one on the right side center of the cylinder block. The thermostat is located in the water outlet elbow on the cylinder head.

(2) *Radiator.* The radiator is of the cellular type of construction and utilizes a pressure filler cap that maintains a pressure in the system up to 4½ psi above atmospheric. The pressure reduces coolant loss due to evaporation.

(3) *Water pump and fan.* The water pump is of the centrifugal-impeller type and is located on the front of the cylinder block. The four-bladed fan fastens to the double-sheave drive pulley. The pump shaft operates on a prelubricated stainless steel ball bearing.

(4) *Thermostat.* Proper engine temperatures are maintained by the thermostat located in the water outlet elbow (fig. 30).

It is of the bellows type and operates at fixed predetermined temperatures.

b DATA.

(1) *Radiator.*

Make	Jamestown.
Capacity (system)	11 qts.
Filler cap	4½ psi pressure type.

(2) *Water pump and fan.*

Type	Centrifugal.
Location	Front of cylinder block.
Drive	Belt.
Bearing	Prelubricated ball bearings.
Fan	Four blade—15-inch diam.

(3) *Belts.*

Type	Vee wedge-cogged.
Width	⅜ in.
Angle	40°.

(4) *Thermostat.*

Location	Water outlet elbow.
Range rating	145°—155°.
Fully open	170°.

130. Radiator

a. REMOVAL. Remove the radiator guard assembly (par. 78). Unfasten the radiator brace rod at the slotted bracket on top of the radiator (fig. 18). Remove the nuts from the two radiator mounting studs holding the radiator to the front cross member (fig. 20). Remove the fan by removing the four attaching bolts to the fan hub. Remove the upper and lower radiator hoses and lift the radiator straight up to clear the radiator-to-engine mount rods and then out of chassis.

b. INSTALLATION. Place the radiator mounting bracket insulators on the cross member brackets and set radiator in place so that radiator-to-engine mount rods engage the socket on each side. Replace the two nuts on the bottom mounting studs. Install the upper and lower radiator hoses, the fan, and the brace rod. Fill the system and check for leaks, and then replace filler cap. Install the radiator guard assembly (par. 109).

131. Water Pump

a. REMOVAL. Remove the four fan blade mounting screws and take off fan to prevent damage to radiator core. Remove by-pass hose (fig. 30), and lower radiator hose from pump. Remove the fan belts by relieving the generator tension (par. 143*c*), and remove the four water pump mounting bolts from the cylinder block. Remove pump.

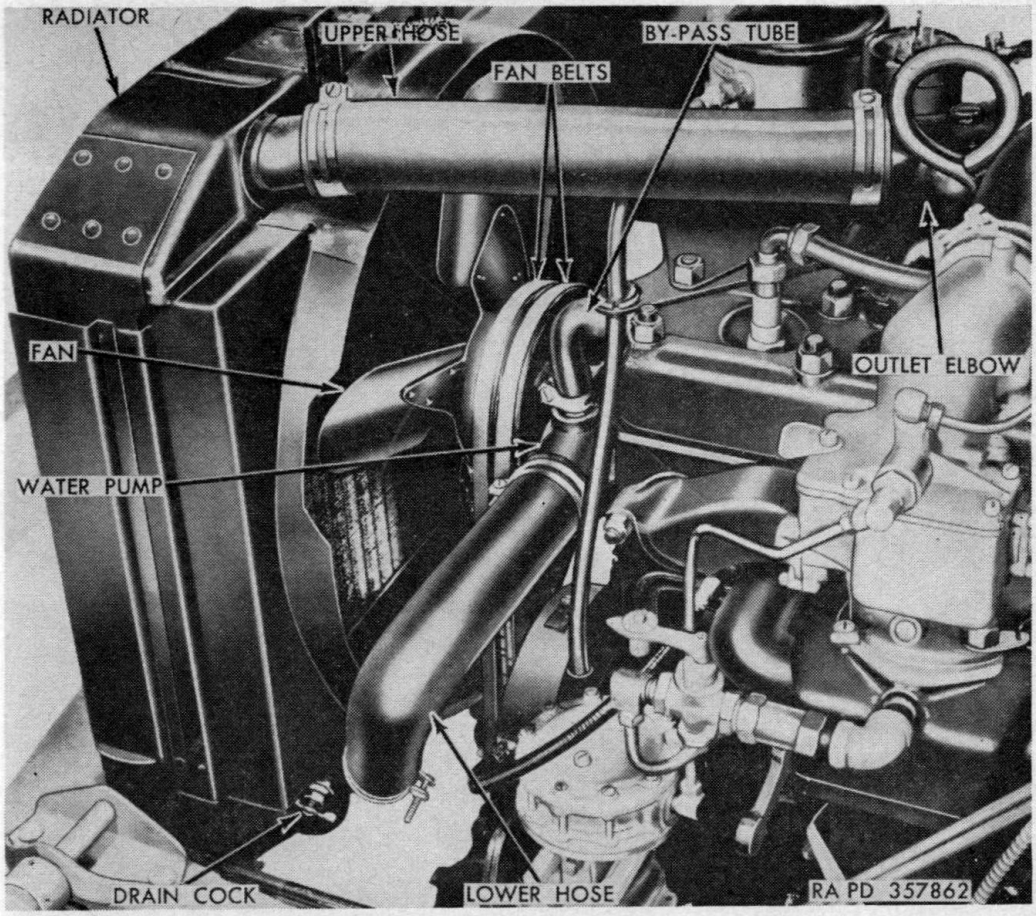

Figure 30. Cooling system.

b. INSTALLATION. Be sure the pump to cylinder block gasket is in good condition. Install the pump to the cylinder block with the four mounting screws and tighten securely. Install the fan, lower water hose, and by-pass tube. Mount the fan belts and tighten by setting generator brace to give proper belt tension (par. 143*c*). Fill radiator, install cap, and check for leaks. Run engine and check level of coolant after engine is warmed up.

132. Fan Belts

a. REMOVAL. Loosen the generator brace screw and move generator towards engine as far as it will go. Remove belts from generator, crankshaft, and water pump pulleys and lift over the fan blades.

b. INSTALLATION AND ADJUSTMENT. Place belt over the fan blades and into grooves of the crankshaft, water pump and generator pulleys. Pull out the generator until the belts have proper tension, and tighten brace screw. To adjust fan belt tension (fig. 31), loosen the generator brace screw, and move generator until fan belt has about one-inch deflection between the fan and generator pulleys (fig. 31), then tighten the brace screw.

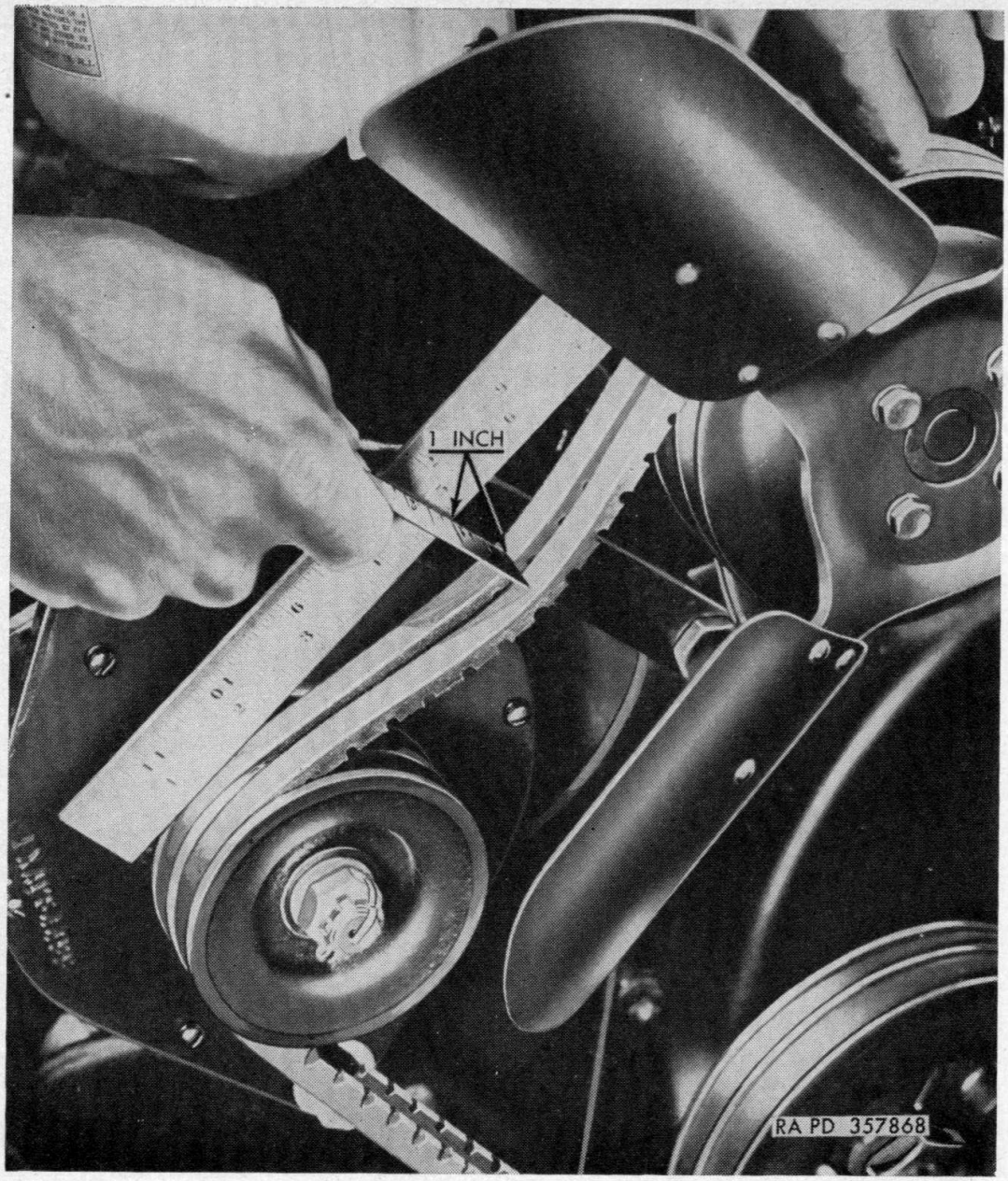

Figure 31. Fan belt adjustment.

133. Thermostat

a. Removal. Drain the cooling system by opening the drain cock at the bottom of the radiator. Loosen upper hose at the water outlet elbow; remove three mounting screws, and lift off the elbow. Pull out thermostat retaining ring in elbow, and take out thermostat.

b. Installation. Place thermostat in the water outlet elbow with bellows out. Install the retaining ring with flange against thermostat. Check the condition of the gasket and bearing surfaces on cylinder head and elbow. Use new gasket if necessary. Insert the outlet elbow in the hose and install in position on cylinder head with three screws. Tighten hose clamp, close radiator drain cock, and fill the system. Give due attention to antifreeze requirements, if necessary. Warm up engine and check for leaks.

134. Cooling System Services

a. Precautions. The cooling system must be inspected in accordance with preventive maintenance procedures (table II). When draining the cooling system refer to caution plate on the instrument panel (fig. 4). General maintenance of the cooling system consists of the following procedures:

(1) Keep sufficient coolant in the system. Use clean water to which must be added the specified rust inhibitor; at temperatures below 32° F., add proper quantity of antifreeze solution (table IV).

(2) Drain, flush, and refill system whenever inspection reveals any accumulation of rust or scale. Clean system seasonally as well as before and after using antifreeze solution.

(3) If engine overheats due to lack of coolant in the system, do not add cold water immediately. Let engine cool so that water in radiator does not boil. Start engine, and add water slowly to prevent damage to cylinder block and head.

(4) Do not overfill radiator. Fill only to bottom of baffle visible through the radiator filler hole.

(5) Keep cylinder head, water pump, hose clamps, and connections leakproof. Replace deteriorated or leaky hose.

(6) Adjust fan belt and replace as required.

(7) Test periodically for air suction and exhaust gas leaking into system (*c* and *d* below).

b. Draining and Refilling System.

(1) Drain the cooling system, when required, by opening the drain cocks at the lower left corner of the radiator, and at the right side center of the cylinder block. Loosen the pressure-type radiator cap to break any vacuum which might prevent proper draining. If solution is to be saved, catch it in a clean container. If system is not to be refilled immediately, attach a tag to the steering wheel warning personnel about the system being drained.

(2) Refill the cooling system by first closing the two drain cocks tightly. Use clean water; preferably soft water (water with low alkali content). Fill system through radiator filler pipe until level is up to lower edge of baffle visible through filler hole. Install radiator cap, and turn clockwise to tighten. Start engine and warm up. Check coolant level in radiator, and add if required.

c. Air Suction Test. The air suction test is used to determine if air is entering the coolant, possibly due to low coolant level in the radiator, leaky water pump, or loose hose connections. To make test, fill system to bottom edge of baffle in top of radiator. Replace pressure-type cap with plain cap, and tighten securely (airtight). Attach

length of rubber tubing to lower end of overflow pipe (this connection must be airtight). Run engine, with transmission in neutral, at a moderate speed until warmed up. Place tubing in glass container of water, and without changing engine speed, watch for bubbles in water. Continuous appearance of bubbles indicates that air is entering coolant. Correct as necessary.

d. EXHAUST GAS LEAKAGE TEST. The exhaust gas leakage test is used to determine if gas is entering the coolant, possibly due to leaky cylinder block, cylinder head, or gasket.

Note. Make this test with engine cold.

Remove fan belt. Open radiator drain cock until coolant is below cylinder head water outlet.

Note. Determine by loosening three screws holding outlet to head.

Remove water outlet, and fill cylinder head with coolant until level is up to top of head. With transmission in neutral, start engine, "gun" it several times, and watch for bubbles in water. Appearance of bubbles indicates leakage which must be corrected. Replace leaky gasket; report other causes to ordnance maintenance personnel.

e. CLEANING AND FLUSHING PROCEDURE. This procedure is used to clean out loose rust. Run engine at moderate speed to stir up loose rust. Drain cooling system. Close drain cocks, and fill system with specified cleaning compound. Install radiator cap. Operate engine as directed for prescribed solution. Stop engine and completely drain system by opening both drain cocks. To flush system, close drain cocks, fill system with water, run engine until warmed up again, or run water through system, then completely drain. Close drain cocks, refill system, and add corrosion inhibitor compound to prevent formation of rust and scale. Inhibitor compound must be renewed periodically to be effective.

Section XII. IGNITION SYSTEM

135. Description and Data

a. DESCRIPTION. The ignition system (fig. 32) furnishes the spark required to ignite the air-fuel mixture in the cylinders after it is compressed. The spark must occur in each cylinder at exactly the proper time and the spark in the various cylinders must follow each other in the correct sequence of firing order. The following components make up the ignition system.

(1) The batteries which supply the electric power.
(2) The ignition coil which is built as a unit with the distributor. This transforms the battery voltage to a high voltage that can jump the spark-plug gap.
(3) The ignition radio noise suppression filter which is housed in a

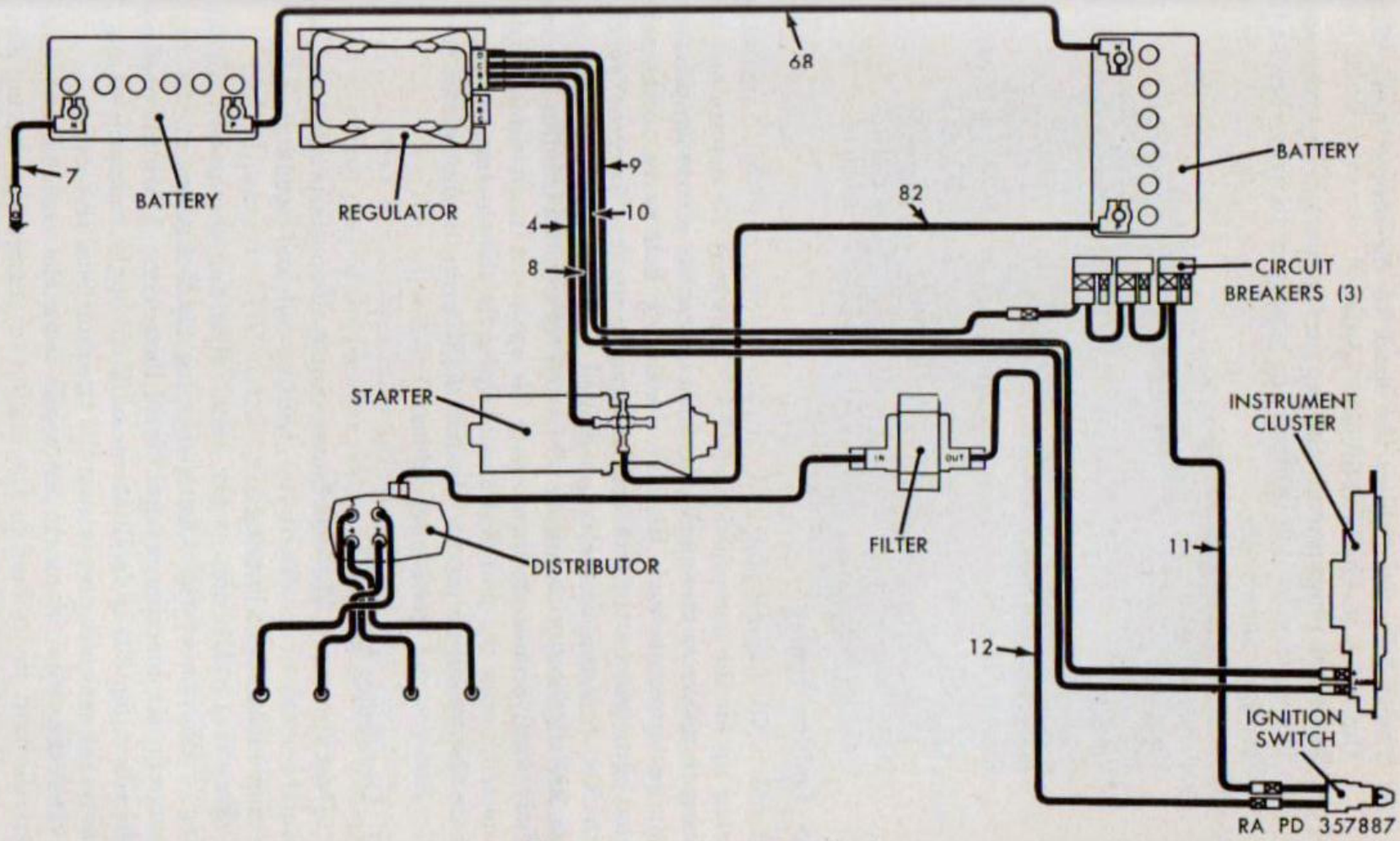

Figure 32. Ignition system circuit.

waterproof case is installed to reduce radio interference normally caused by the ignition system.

(4) The distributor delivers the spark to the proper spark plug through a mechanical breaker system.

(5) The spark plugs provide the gap for the spark in the cylinders.

(6) The ignition switch controls the supply of battery current to the ignition system.

b. DATA.

Distributor and coil	
Make	Auto-Lite.
Type of advance	Centrifugal.
Rotation	Counterclockwise.
Firing order	1–3–4–2.
Breaker point gap	0.020 in.
Breaker spring tension	17 to 20 oz.
Capacitor (condenser) capacity	0.25 to 0.26 mfd.
Voltage	24.
Spark plugs	
Ordnance number	7524255.
Thread size	14 mm.
Gap	0.030 in.

136. Ignition Timing

Remove No. 1 spark plug and turn engine over until No. 1 piston is coming up on the compression stroke. This may be determined by placing thumb over the spark-plug hole to feel the increasing pressure as the piston comes up. Remove the timing hole cover on the rear engine plate and set the indicator mark opposite the "5 degree" mark. With No. 1 piston correctly positioned and the timing marks set, loosen the distributor mounting screw and turn the distributor housing slightly until points are just ready to open. A neon timing light connected across the points is most helpful for this setting. Securely tighten the mounting screw. Install the distributor unit cover (par. 137 *c*) and connect spark-plug cables.

137. Distributor Unit

a. DESCRIPTION. The distributor unit is of special waterproof design and consists of the distributor, ignition coil, and capacitor enclosed in a single watertight housing.

b. REMOVAL. Disconnect the vent tubes and the primary cable fitting. Disconnect the four spark-plug cable fittings at the cap. Remove the six cover screws and lift off the cover. Mark the position of the rotor (fig. 33) to facilitate installation of the replacement unit. Remove the mounting screw and lift the unit from the engine.

c. INSTALLATION. Remove the cover from the replacement unit. Insert the unit in its hole in the engine to engage the driving slot. Have the position of the rotor the same as noted in the removed unit. When seated, assemble mounting screw but do not tighten. Check

the timing as in paragraph 136 and tighten mounting screw. In replacing the cover, make sure that the gasket is properly placed. Replace the wire terminals and do not tighten too tightly as to damage the gland rubbers. Replace the vent tubes.

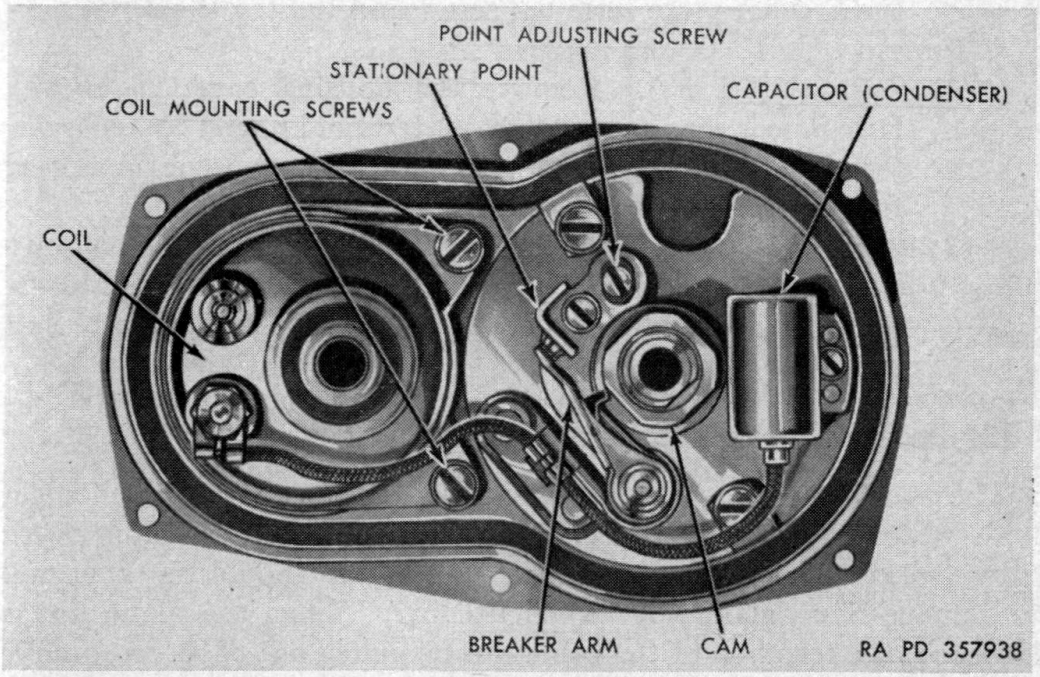

Figure 33. Distributor.

d. Distributor Breaker Points. The contact points should be clean and not burned or pitted. While it is satisfactory to remove surface pits with a stone, generally it is advisable to replace the points.

(1) *Removal* (fig. 33). Remove the housing cover (*b* above). The stationary point can be removed by taking off the lock screw. To remove the breaker arm loosen the screw on the breaker plate terminal and lift off.

(2) *Installation.* Set the stationary point bracket slotted hole over the adjusting eccentric screw and assemble the lock screw in the other hole. Next place the breaker arm on the pivot post of the breaker plate and slip the slot at the end of the spring over the loosened terminal screw. Tighten the terminal screw.

(3) *Adjustment.* The contact gap should be set at 0.020 inches as measured by a feeler gage. Adjustment is made by loosening lock screw (fig. 33) and turning eccentric. Tighten the lock screw and check again. Should new points be installed, they should be alined to make contact at the center of the contact surfaces. Bend the stationary contact bracket to be sure of proper alinement, after which the gap should be rechecked.

e. Capacitor (Condenser).

(1) *Removal* (fig. 33). Remove the housing cover (*b* above).

Remove the capacitor retaining screw and loosen the breaker plate terminal screw and remove capacitor terminal.

(2) *Installation.* Fasten the capacitor to the breaker plate with the attaching screw. Slip the capacitor wire terminal on to the breaker plate terminal screw and tighten the screw.

f. Ignition Coil.

(1) *Removal* (fig. 33). Remove the housing cover (*b* above). Disconnect wire at negative (–) terminal of coil by removing terminal nut and washer. Remove the two coil mounting screws and lift out the coil.

(2) *Installation.* Insert the coil in the housing and fasten down with the two mounting screws. Fasten wire terminal to the negative terminal of the coil with the terminal nut and washer.

138. Spark Plugs and Cables

The spark plugs are of special shielded aircraft type designed for underwater operation. The cables are heavy shielded assemblies with threaded gland connections at each end. Care should be taken not to damage these glands by overtightening. When the gland nut is loosened, the terminal of the cable can be pulled out of its receptacle. The spark gap should be 0.030 inches.

139. Ignition Radio Interference Filter

The ignition filter (fig. 32) is mounted on the dash panel under the air cleaner with four screws. It is placed in the primary circuit. This is a capacitor and coil type and is used to suppress radio interference which may originate in the ignition system. An open circuit in the coil or a shorted capacitor will interrupt the flow of current to the distributor causing engine stoppage or failure to start. The filter is a sealed unit and cannot be repaired. Should it be faulty, it must be replaced.

Section XIII. STARTING SYSTEM

140. Description and Data

a. Description. The starting system (fig. 34) operates at 24 volts and consists of the starter assembly and cables to the battery. The switch and pinion engaging clutch assembly is part of the starter unit and is actuated by a foot-operated pedal on the vehicle floor board. An overrunning clutch disengages the pinion when the engine starts.

b. Data.

System voltage	24 volts.
Starter make and model	Auto-Lite, MB.
Cranking speed	160 r. p. m.
Drive	Manual.
Switch	Integral with starter.

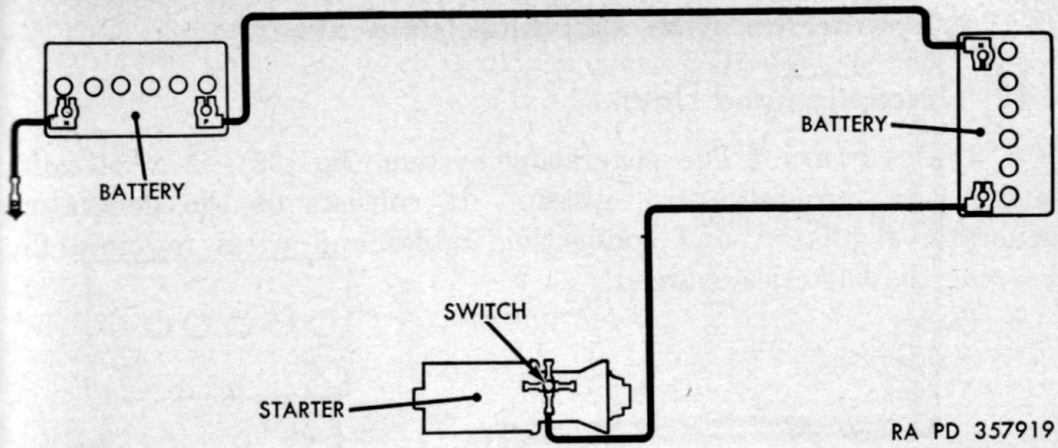

Figure 34. Starter system.

141. Starter

a. DESCRIPTION. The starter is a completely sealed unit for waterproofing. It has an integral switch and a manually engaged drive with an overrunning clutch. The bearings are lubricated at assembly and require no attention between overhauls.

b. REMOVAL. Remove battery cable from terminal stud. Remove one screw at front support and two screws from flywheel housing. Remove the starter by pulling forward and out (fig. 35).

c. INSTALLATION. Place starter in position on flywheel housing and mount with two screws. Install front support screw. Install battery cable on terminal stud and coat well with glyptol or equal sealer (fig. 35).

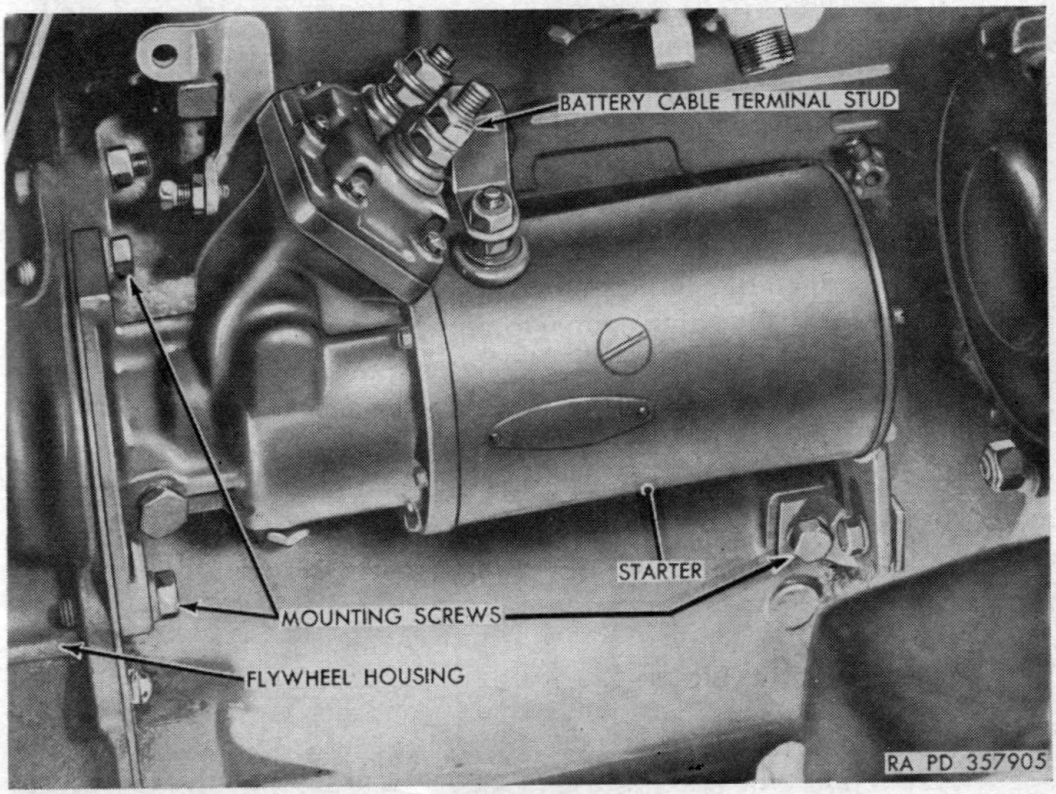

Figure 35. Starter.

Section XIV. GENERATING SYSTEM

142. Description and Data

a. DESCRIPTION. The generating system (fig. 36), is a 24 volt, single wire, ground-return system. It consists of the generator, generator regulator, and connecting cables and wires required for keeping the batteries charged.

b. DATA.

(1) *Generator.*

Make	Auto-lite.
Voltage	24.
Ground polarity	Negative.
Controlled output	25 amperes.
Rotation	Clockwise.
Brushes	2.
Bearings	Stainless steel ball.

(2) *Generator regulator*

Make	Auto-lite.
Voltage	24.
Amperes	25.
Ground polarity	Negative.

143. Generator

a. DESCRIPTION. The generator is a two brush, 25 ampere, 24 volt unit especially designed for underwater operation. It is fully sealed to prevent the entrance of water, and stainless steel bearings are used to prevent corrosion. The commutator end bearing is packed at assembly with heat resisting grease and requires no attention between overhauls. The drive end bearing is lubricated by a pick up gear which rotates in a chamber filled with engine oil. This chamber should be full when installed and requires no further attention between overhauls.

b. REMOVAL. Remove the adjusting arm screw from the generator, swing up toward engine, and remove the drive belts from the generator pulley. Unscrew the cable connector coupling nut on top of the generator and pull out the cable plug. Remove the two mounting bolts from the generator support and lift out the generator.

c. INSTALLATION. Put the generator in place, install the two pivot bolts, and secure with nuts. Engage the belts in the pulley grooves and attach the adjusting arm to the generator with the screw. Tighten with proper belt tension (fig. 31). Insert cable connector plug in the receptacle and secure with nut.

144. Generator Regulator

(Fig. 37.)

a. DESCRIPTION. The regulator consists of three units—voltage regulator, current regulator, and circuit breaker. The voltage regu-

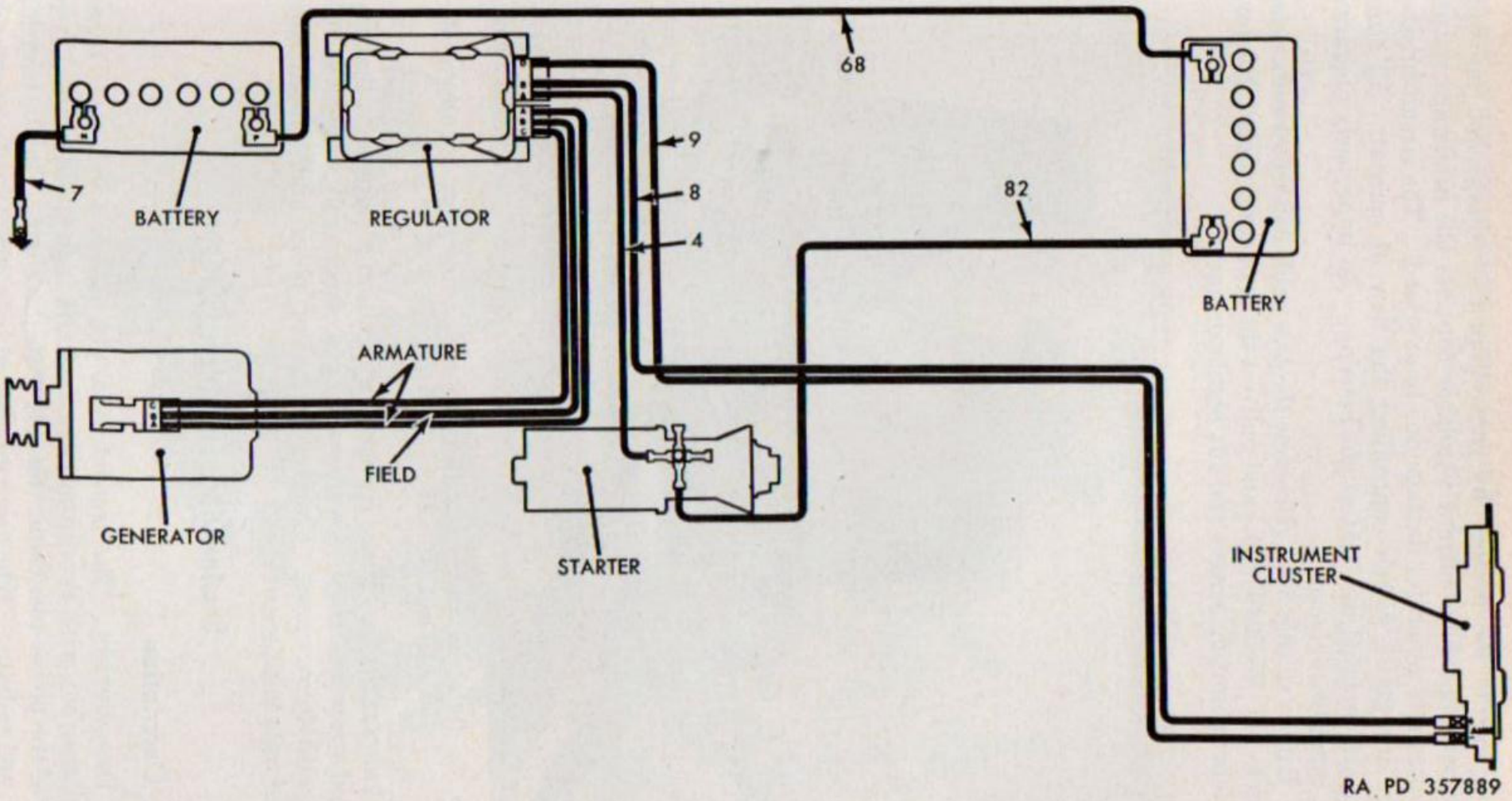

Figure 36. Generating system.

lator protects the battery by controlling the voltage and prevents overcharging. The current regulator controls the amperage output and prevents generator damage due to overload. The circuit breaker is an automatic switch controlling the flow of current. All three units are enclosed in a watertight housing. An improperly operating unit must be replaced.

b. Removal (fig. 37). Unscrew the two cable connector nuts using wrench—41–W–3249–900—and pull out the connector plugs. Remove the four mounting screws and lift regulator out.

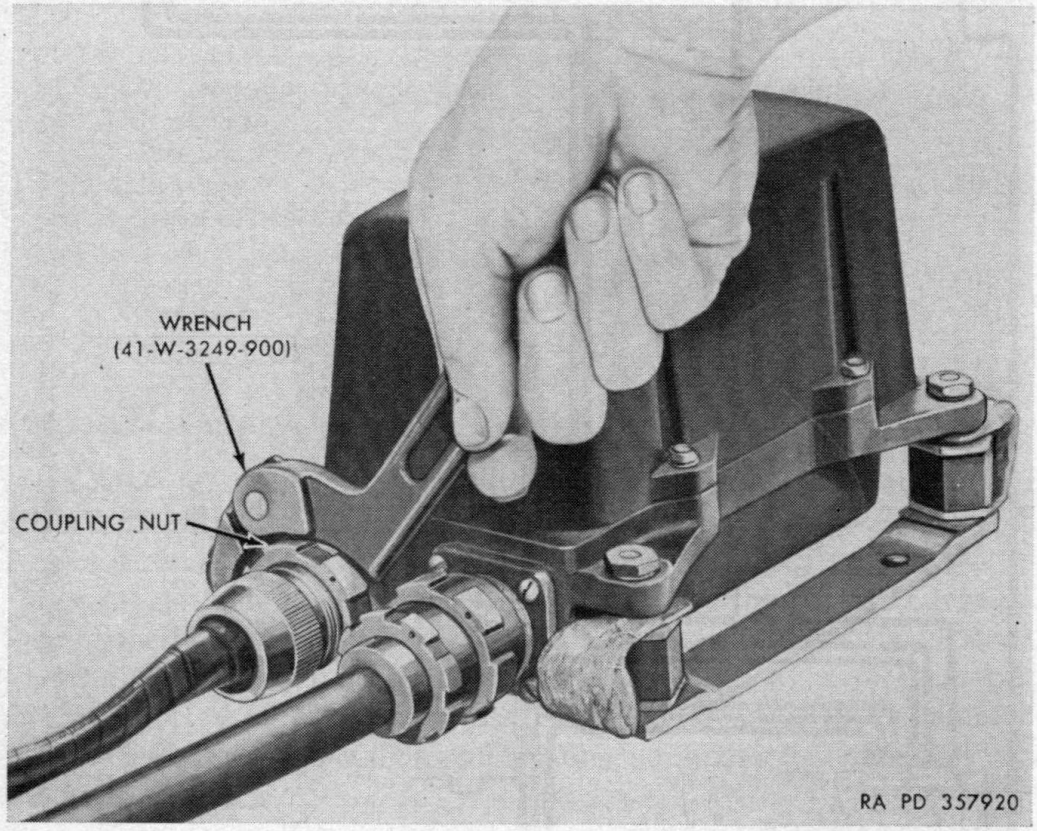

Figure 37. Tightening connector coupling nut on generator using spanner wrench—41–W–3249–900.

c. Installation. Place regulator in position making sure that the ground straps and toothed washers are placed correctly. Then secure unit with four screws. Connect connector plugs and tighten connector nuts with wrench—41–W–3249–900.

Section XV. TRANSMISSION

145. Description

a. Description. The transmission (fig. 38) is a selective, three speed gear box with synchronized second and high speed gears. It is part of the power plant unit (fig. 14) with the engine, clutch, transfer case, and radiator. The gears are shifted by a cane type lever extend-

ing out of the top of the housing and is located in the vehicle to the right of the driver (fig. 5). Refer to figure 4 for shifting instructions.

b. DATA.

Make	Warner gear.
Type	Synchromesh.
Speeds	3 forward—1 reverse.
Ratios:	
Low	2.798–1.
Intermediate	1.551–1.
High	1.000–1.
Reverse	3.798–1.
Lubricant capacity	2 pts.

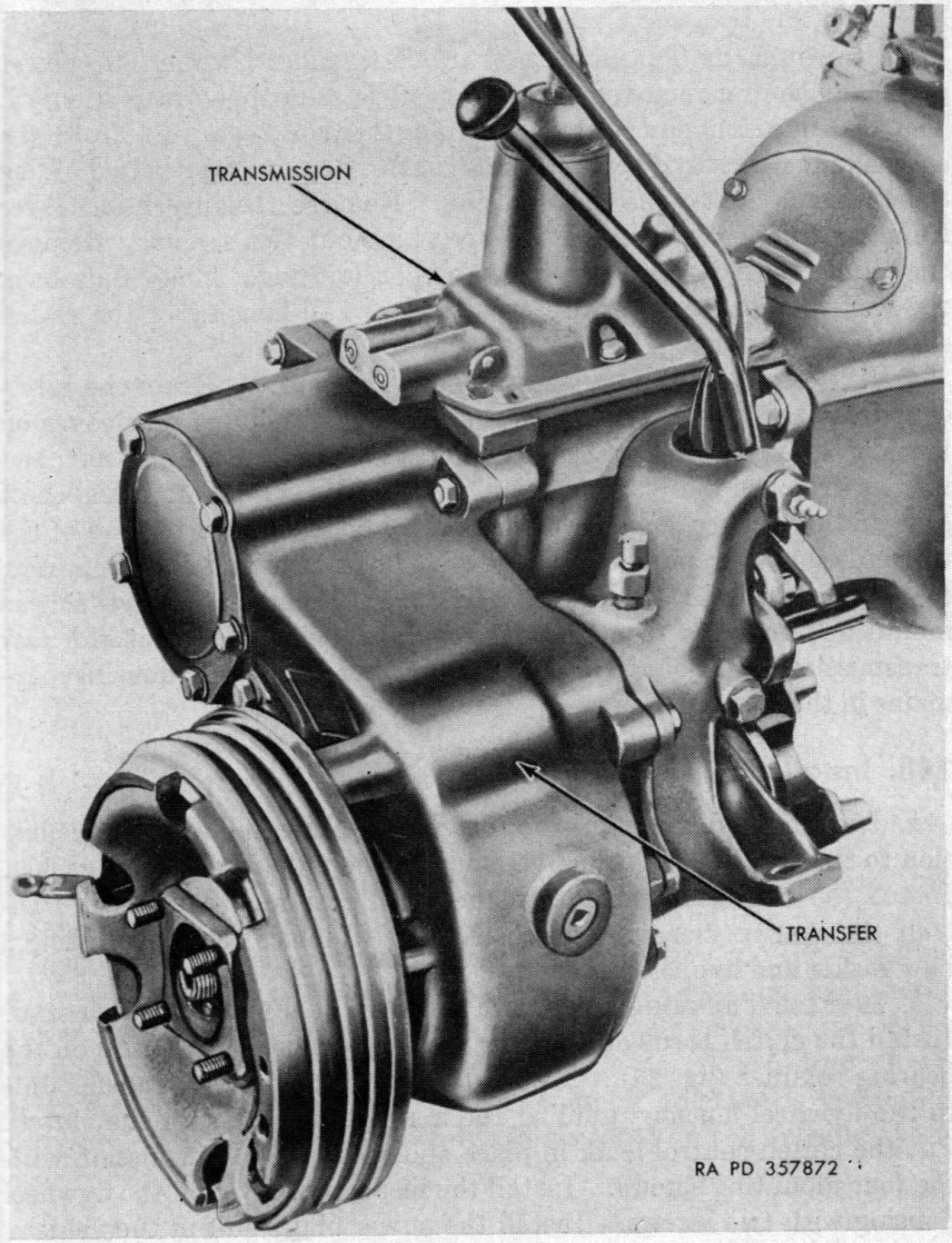

Figure 38. Transmission and transfer.

146. Coordination With Ordnance Maintenance Unit

Replacment of the transmission with a new or rebuilt unit is normally an ordnance maintenance operation, but may be performed in an emergency by the using organization, provided authority for performing this replacement is obtained from the appropriate commander. Tools needed for the operation which are not carried in the using organization may be obtained from the supporting ordnance maintenance unit. It is assumed that replacement of the transmission requires that the unit power plant be removed from the vehicle.

147. Removal

a. Removal of Transmission and Transfer Unit. The power plant unit is first removed from the vehicle as outlined in section VI. The transmission and transfer should then be separated from the engine and clutch and removed as a unit. Remove four bolts holding the transmission to the bell housing. Remove the inspection cover from the top of the bell housing by taking out two screws. Remove the clutch release fork from inside of bell housing. Then slide back the transmission and transfer unit to clear bell housing of the clutch shaft.

b. Removal of Transmission From Transfer. Drain the lubricant from both cases. Remove the five screws holding rear cover on transfer, and remove cover and gasket. Remove cotter pin, nut, and washer from end of transmission main shaft. Pull off main shaft gear and oil slinger. Remove the control housing from the top of the transmission by removing six screws. Position main shaft retaining tool behind second speed gear (fig. 39). Remove the five screws mounting the cases together and separate, using care that the rear transmission main shaft bearing, which bears in both housings, remains in the transmission.

148. Installation

a. Install Transmission to Transfer. Assemble the transmission to the transfer with the five mounting screws, using a new gasket. Install the main shaft gear with the small gear facing outward. Install the gear washer nut and cotter pin. Replace rear cover using a new gasket and five screws.

b. Install Transmission and Transfer to Flywheel Housing. Install the clutch throwout bearing, bearing carrier, and spring on the bearing retainer (fig. 25). Mount the transmission and transfer unit to the flywheel housing, guiding the main gear shaft with the clutch. Put the clutch control lever in place and secure the transmission with the four mounting screws. Install the inspection cover on the flywheel housing with two screws. Install the power plant unit in the vehicle, as described in section VI.

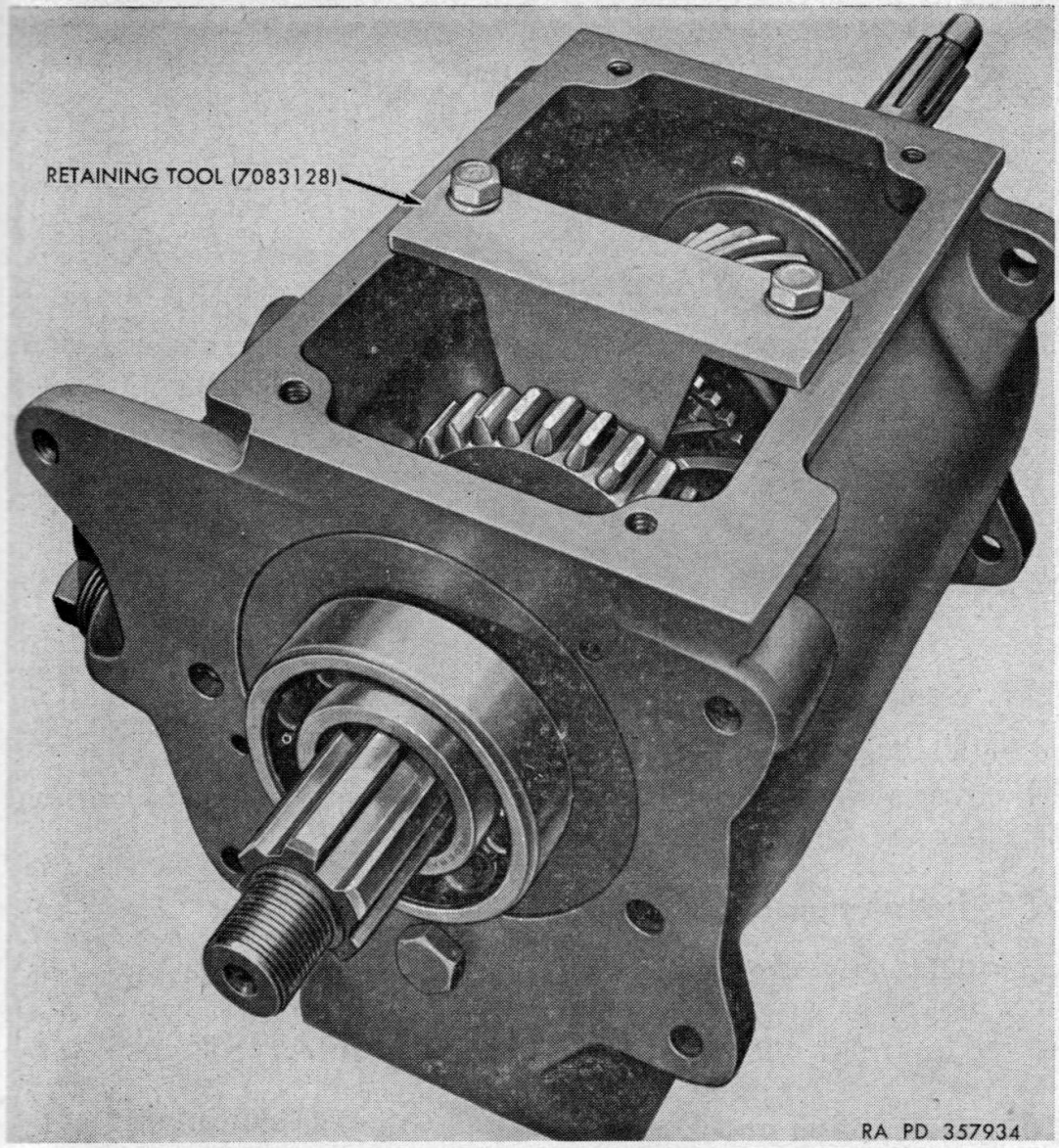

Figure 39. Main shaft retaining tool.

Section XVI. TRANSFER

149. Description and Data

a. DESCRIPTION. The transfer (fig. 38) is an auxiliary gear unit attached to the rear of the transmission. It essentially is a two-speed transmission providing an additional gear reduction for any selection of the transmission gears and also a means of engaging and disengaging power to the front axle. Shifting is accomplished by two levers located to the right of the transmission shift lever. Use of these levers is covered in paragraph 25*c*. A power-take-off aperture is located at the rear. The hand-brake assembly is mounted on the housing at the rear axle output shaft.

b. DATA.

Make	Spicer.
Ratio:	
High range	1:1.
Low range	2.43:1.
Lubricant capacity	3 pints

150. Coordination With Ordnance Maintenance Unit

Replacement of the transfer with a new or rebuilt unit is normally an ordnance maintenance operation, but may be performed in an emergency by the using organization, provided authority for performing this replacement is obtained from the appropriate commander. Tools needed for the operation which are not carried in the using organization may be obtained from the supporting ordnance maintenance unit. It is assumed that the replacement of the transfer requires that the unit power plant be removed from the vehicle.

151. Removal

Details for the removal of the transfer are included in section XV. The transmission and transfer are removed from the power plant unit together and separated on the bench.

152. Installation

Installation of the transfer is covered in section XV.

Section XVII. PROPELLER SHAFTS

153. Description and Data

a. DESCRIPTION. Two propeller shafts are used, one to drive each axle. Each shaft has a universal joint at each end and a splined slip joint at the end nearest the transfer (fig. 40).

Note. The slip joint is marked with an arrow on the spline shaft and on the sleeve yoke, and these must always be alined.

The propeller shaft connecting the transfer to the front axle has U-bolt-type joints at both ends. The rear propeller shaft has a U-bolt-type joint at the rear axle and a snap-ring type (fig. 40) at the transfer end.

b. DATA.

Make	Spicer.
Type joints:	
Front	Snap ring and U-bolt.
Rear	U-bolt.
Bearings	Needle roller.

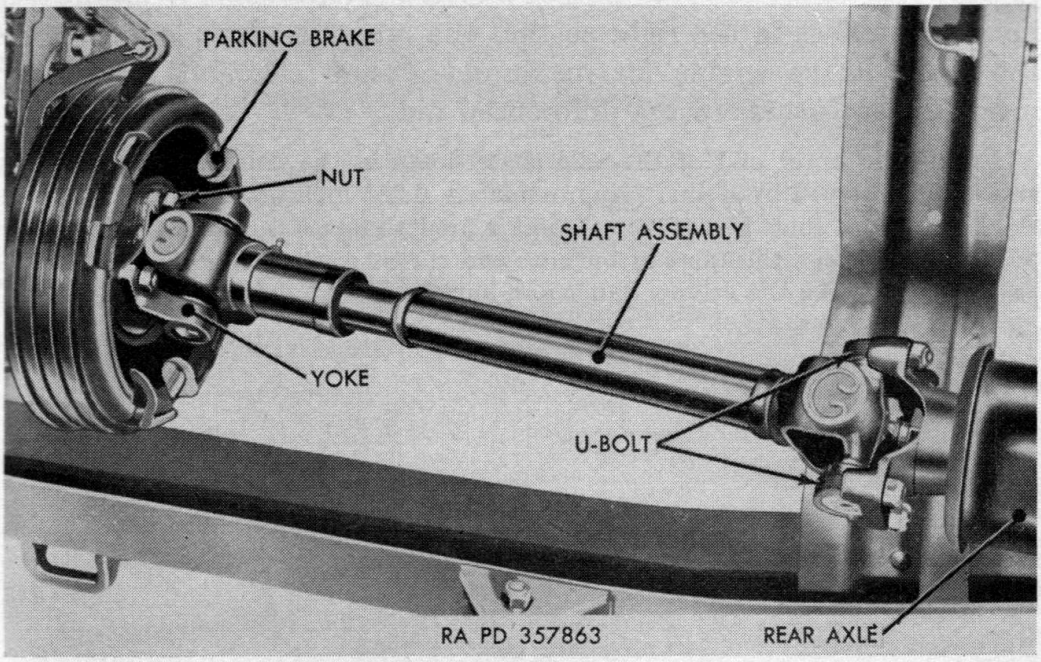

Figure 40. Rear propeller shaft.

154. Removal

a. Front Propeller Shaft. Disconnect the U-bolts at each joint (fig. 40). Push slip joint together to shorten shaft and remove propeller shaft.

Note. Take care not to lose the needle rollers from the bearings.

b. Rear Propeller Shaft. Remove four bolts from front universal joint yoke flange. Remove two U-bolts from rear universal joint yoke on axle. Remove propeller shaft assembly.

155. Installation

a. Front Propeller Shaft. Install propeller shaft and universal joint assembly in position on vehicle. Install U-bolts at axle and at transfer.

Note. Tighten U-bolts evenly.

Lubricate universal joints (par. 36).

b. Rear Propeller Shaft. Install propeller shaft and universal joint assembly in position. Install U-bolts in rear universal joint and tighten evenly. Attach universal joint flange at transfer case with four bolts. Lubricate universal joints (par. 36).

Section XVIII. FRONT AXLE

156. Description and Data

a. Description. The front axle (fig. 41) is a full-floating type enclosing a front wheel driving unit having a single reduction, two pinion differential, and hypoid drive gears. The differential carrier

housing is offset to the right so that the propeller shaft is located to the right of the engine for maximum ground clearance. A cover provides easy access to the differential unit.

Note. The outer end of the axle shaft floats in the driving flange splines and is not retained by a nut. Approximately 0.088 inch maximum end float of the Bendix-type shaft and universal joint is predetermined in manufacture by the position and flange thickness of bushing and thrust washer (fig. 41). No shims are placed between the driving flange and hub, a gasket only being used.

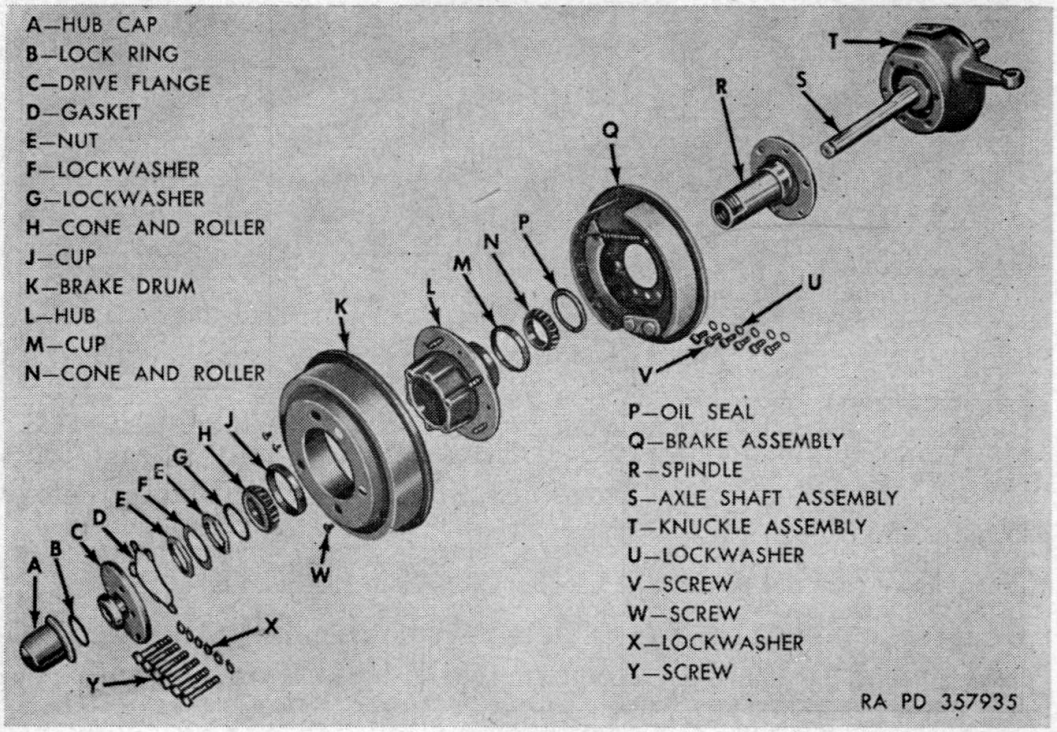

Figure 41. Front axle-exploded view.

b. Data.

Make	Spicer.
Model	25.
Drive gear ratio	5.38 to 1.
Drive	(Through springs).
Type	Full floating.
Road clearance	9½ inch.
Differential type	2 pinion.
Differential drive gears	Hypoid.
Differential bearings	Tapered roller.
Turning angle	25°.
Tie rods:	
Number	2.
Right-hand length, center-to-center	24½ inch.
Left-hand length, center-to-center	19¾ inch.
Steering geometry:	
King pin inclination	7½°.
Wheel camber	1½°.
Wheel caster	3°.
Wheel toe-in	3/64-3/32 inch.

b. DATA—Continued

Bearings:

Differential side	Tapered roller.
Pinion shaft	Tapered roller.
Wheel hub	Tapered roller.
Steering knuckle	Tapered roller.
Steering bellcrank	Tapered roller.
Lubricant capacity	1¼ quarts.

157. Maintenance

Correct any lubricant leakage. Lubricate differential and steering housings, wheel bearings, and steering control as required (par. 36). Keep vent cleared of dirt. Wheel bearings must be properly adjusted (par. 158). Replace damaged brake drums and hubs, and steering control rods (par. 193). Check wheel toe-in periodically, and correct if necessary. Keep all mounting bolts tight. Report to higher authority any caster and camber trouble, or unusual noises.

158. Wheel Bearings

a. ADJUSTMENT. Raise front of vehicle so that tire clears floor. Pry off hub cap. Remove driving flange screws. With puller–41–P–2957, pull off flange (fig. 42). Bend lip of nut lock washer away from nut. Remove lock nut with box-type socket wrench–41–W–3825–200 (fig. 43). Remove lock washer. Spin wheel, and tighten wheel bearing nut until wheel binds. Back off nut about one-sixth turn, or more if necessary, until wheel turns freely. Install lock washer and lock nut.

Note. Bend over lip of lock washer against lock nut.

Check adjustment of bearings by gripping front and rear side of tire and moving it from side to side. A slight perceptible shake should be felt in the bearings. Install driving flange. (With Rzeppa-type joint disregard these instructions and use 0.060-inch shim pack.) Install new hub cap.

b. REMOVAL. Loosen wheel stud nuts.

Note. Wheel studs have left-hand threads on left side of vehicle.

Raise front of vehicle so that tire clears floor. Remove wheel stud nuts and remove wheels. Pry off hub cap. Remove driving flange screws and using puller, pull flange. Bend lip of nut lock washer away from lock nut and remove nut. Remove lock washer. Remove wheel bearing nut and bearing lock washer. Shake wheel until outer bearing comes free of hub, and lift off hub. Drive or press out inner bearing along with oil seal. Turn over, and drive or press out outer bearing cup. Clean lubricant out of hub, and wash all parts in volatile mineral spirits paint thinner.

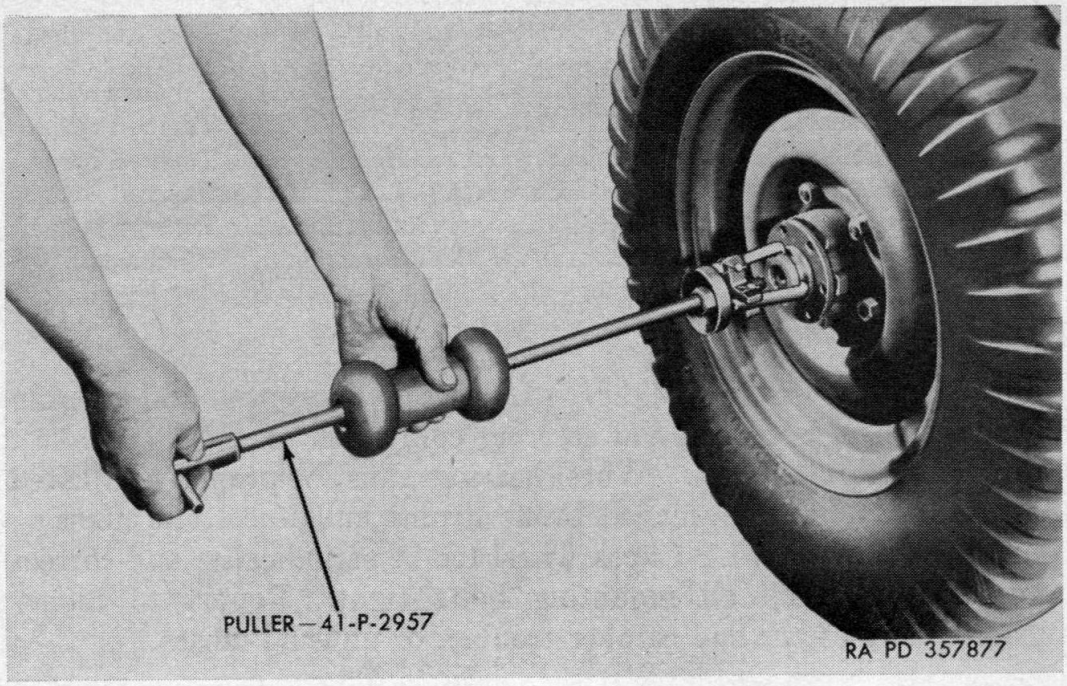

Figure 42. Front axle flange removal.

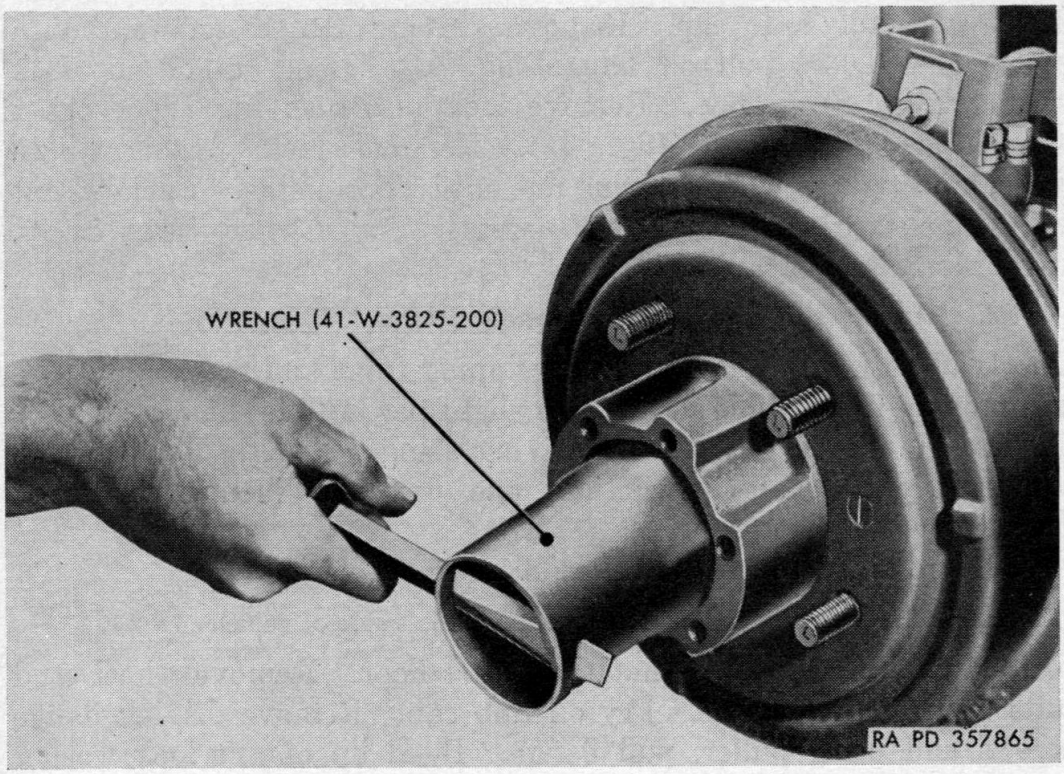

Figure 43. Removing lock nut using wrench–41–W–3825–200

c. INSTALLATION. Press bearing cups solidly into place in hub. Spread 1/16-inch layer of lubricant inside hub to prevent rust. Thoroughly lubricate inner bearing cone and roller assembly.

Note. Pack lubricant thoroughly into bearing rollers and cage.

Install bearing in hub. Press grease retainer (with lip of seal toward bearing), until seal is even with end of hub.

Note. Before installation, soak seal in oil to soften leather.

Lubricate outer bearing cone and roller assembly. Install wheel on axle. Install outer bearing, lock washer, and nut. Adjust wheel bearings, and complete installation of parts (*a* above).

159. Wheel Grease Retainer

a. REMOVAL. Remove retainer as outlined in paragraph 158*b*.

b. INSTALLATION. Install retainer as outlined in paragraph 158*c*.

160. Wheel Hub

a. REMOVAL. Remove wheel and hub (par. 158*b*). Support brake drum inside at hub, and drive out studs. Remove brake drum.

b. INSTALLATION. Assemble brake drum on hub. Install new wheel studs.

Note. Lelt-hand thread studs are used in wheels for left side of vehicle.

Support studs and swedge shoulder over against tapered hole in hub. Install hub on axle and mount wheel (par. 158*c*).

161. Brake Drums

a. REMOVAL. Remove wheel hub and drum as outlined in paragraph 158*a*.

b. INSTALLATION. Install drum and wheel hub as outlined in paragraph 158*c*. Adjust brakes (par. 178*b*).

162. Steering Knuckle Housing Oil Seal

a. REMOVAL. Raise front of vehicle. Remove screws holding oil seal in place, and remove both halves of oil seal assembly (fig. 41).

b. INSTALLATION.

Note. Before installing new oil seal smooth spherical surface of axle with aluminum oxide abrasive cloth.

Grease spherical surface of axle, also oil seal. Install seal in place so that ends fit snugly together, and tighten in place. Check lubricant level in steering knuckle housing, and replenish if necessary (par. 4).

163. Steering Tie Rod

a. REMOVAL. Remove tie rod cotter pins and nuts from tie rod ends. Drive out tie rod ends from steering arms, and remove dust washers and springs.

b. INSTALLATION. Install dust washers and springs on tie rod ends. Install tie rod ends in steering knuckle arm and bell crank, and secure with nuts and cotter pins. Check wheel alinement; if out of alinement notify ordnance maintenance personnel.

164. Drag Link Bell Crank

a. REMOVAL. Remove cotter pin in front end of steering connecting rod. Remove slotted adjusting plug (ball seat). Lift rod off bell crank ball. Remove cotter pins and nuts on tie rod ends at bell crank. Drive tie rod ends out of bell crank.

Note. Do not lose dust washers and springs.

Remove cotter pin in bell crank stud and remove nut, dust washer, and thrust washer. Remove bell crank. Clean all parts in volatile mineral spirits paint thinner. To remove bell crank stud, remove thrust washer, and drive out tapered lock pin toward left front wheel. Drive stud up out of axle.

b. INSTALLATION. If bell crank has been removed, drive stud into axle so that slot will line up with tapered pin hole. Drive tapered pin into position, and stake edge of hole at large end. Install thrust washer on stud. Lubricate roller bearings, and install on stud. Install thrust washer, dust washer, nut, and cotter pin. Install steering connecting rod. Install tie rod ends in bell crank arm, and secure each with nut and cotter pin. Check front wheel toe-in.

165. Wheel Alinement (Toe-In)

a. CASTER AND CAMBER. Caster is the backward tilt of the axle. Camber is the outward tilt of the wheels at the top. If these conditions require attention, notify higher authority.

b. TOE-IN. Wheel toe-in is the difference in distance as measured between the front wheels at the front and at the rear of the axle. To adjust toe-in, set tie rod arm of steering bell crank at right angles to front axle. Use straightedge or line against outside of left wheels, as a guide. Adjust left tie rod so that left wheel is straight ahead. While bell crank remains at right angle to axle, check right front wheel, and adjust tie rod if necessary. Set toe-in of front wheels at 3/64 inch to 3/32 inch by shortening right tie rod approximately one turn.

166. Removal

Loosen wheel stud nuts. Raise front of vehicle, and support underframe side members at rear of spring pivot brackets. Remove wheels. Disconnect brake line at front cross member (fig. 45). Remove universal joint U-bolts at front axle. Jack up front springs. Remove axle spring clip nuts and clips. Remove spring pivot bolt at rear end of right spring. Remove jacks from under springs. Disconnect steering connecting rod at bell crank. Install a jack between left spring and frame. Spread spring until axle assembly will clear. Move axle assembly to the right, and remove. Remove brake hose from axle.

167. Installation

Attach brake hose at axle. Install axle assembly on springs. Remove jack from between left spring and frame. Install right spring pivot bolt. Position axle on springs. Jack up springs, and install spring clips, plates, and nuts. Remove jacks from under springs. Connect brake hose at cross member. Install dust cover on bell crank, and attach steering connecting rod. Attach propeller shaft. Draw universal joint U-bolts up evenly. Lubricate front axle universal joints, and check axle lubricant (par. 36). Adjust brakes if necessary (par. 178). Remove master cylinder inspection cover on toeboard between foot pedals. Fill master cylinder, and bleed brakes (pars. 179 and 181*s*). Replace master cylinder inspection cover. Install wheels and adjust (par. 158). Lower vehicle to floor.

Section XIX. REAR AXLE

168. Description and Data

a. DESCRIPTION. The rear axle (fig. 44) is of the semifloating, single reduction driving unit type, with hypoid gears. The differential housing is offset to the right so that the propeller shaft has a straight drive from the transfer. A cover is used on the rear of the differential housing to permit inspection and cleaning.

b. DATA.

Make and model	Spicer 44.
Drive gear ratio	5.38 to 1.
Drive	Hotchkiss (through springs).
Type	Semi-floating.
Road clearance	9¼ in.
Differential type	Two-pinion.
Differential bearings	Tapered roller.

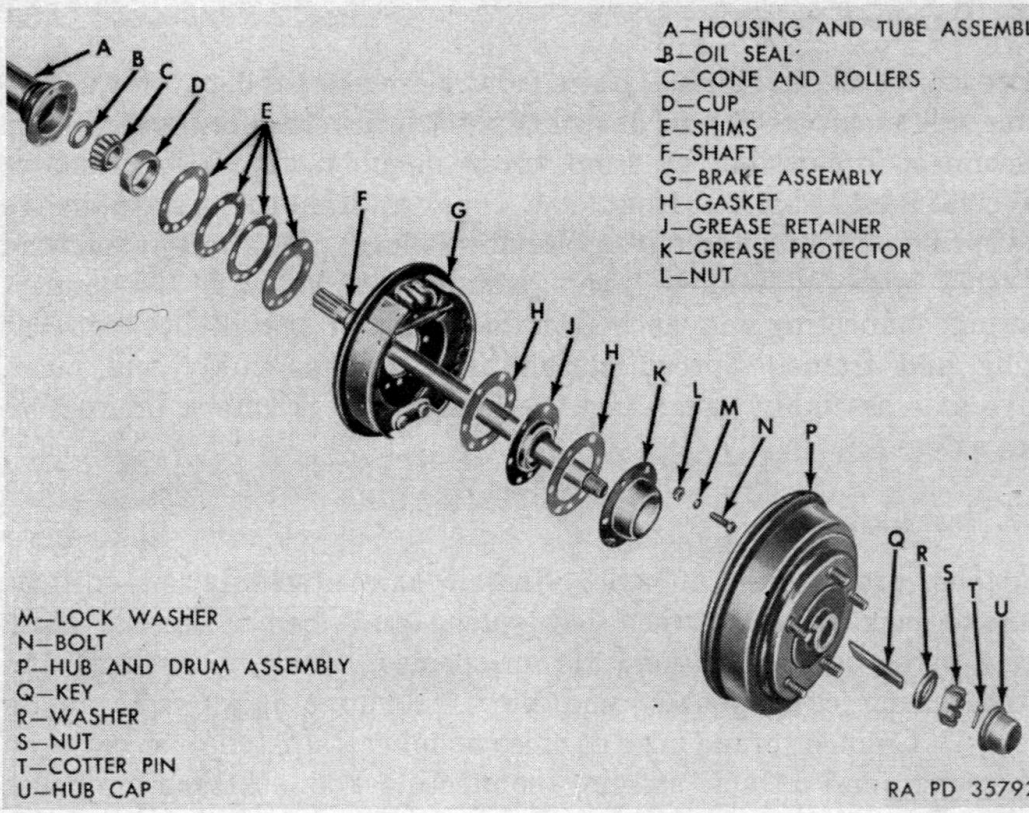

Figure 44. Rear axle—exploded view.

169. Maintenance

Correct any lubricant leakage. Lubricate differential and wh bearings as required (par. 36). Keep vent cleared of dirt. Repla damaged drums and hubs (par. 161). Keep all mounting bolts tigl Report unusual noise to higher authority.

170. Axle Shaft

a. Removal. Place jack under axle housing, and raise wheel that tire clears floor. Remove hub cap, cotter pin, axle shaft nut a large Woodruff key. Remove hub and drum assembly. Remo six bolts, lock washers and nuts attaching the grease protector, grea and bearing retainers, and the brake assembly, and remove the shi and retainer. Pull out the axle shaft using care not to lose the adju ing shims (fig. 44). Remove bearing and oil seal.

b. Installation. Install axle shaft in axle housing, rotating sha so that shaft will enter differential side gear, using care not to dama inner oil seal. Install wheel bearing and shims (par. 171). Check adjustment (par. 171). Install the brake assembly, grease protect grease and bearing retainers. Install wheel hub, axle shaft nu Woodruff key and cotter pin (fig. 44). Replace wheel hub ca Lower vehicle to floor.

171. Axle Bearings

With the hands, test end play by moving axle shaft in and out. If bearings are correctly adjusted, end play of the axle shaft will be just perceptible. The bearing adjustment shims (fig. 44), are placed between the brake backing plate and axle flange as shown in figure 44. Remove or install shims to adjust the bearings to provide 0.003 in to 0.007 in end float of the axle shaft.

172. Wheel Bearing Grease Retainer

a. Removal. Remove retainer as outlined in paragraph 170*a*.

b. Installation. Install retainer as outlined in paragraph 170*b*.

173. Wheel Hub

a. Removal. Remove wheel and hub as outlined in paragraph 204*a*. To remove brake drum from hub, support brake drum at hub, and drive out studs.

b. Installation. Place brake drum on hub. Install new wheel studs.

Note. Left-hand thread studs are used in wheels on left side of vehicle.

Support studs and wedge shoulder over against tapered hole in hub. Install hub on axle and mount wheel (par. 204*b*). Tighten wheel stud nuts securely. Check brake action.

174. Brake Drum

a. Removal. Remove wheel hub and drum as outlined in paragraph 204*a*.

b. Installation. Install drum and wheel hub as outlined in paragraph 204*b*.

175. Rear Axle Replacement

a. Loosen Wheel Stud Nuts. Raise rear of vehicle and support underframe side mem er just ahead of spring pivot brackets. Remove wheels. Remove universal joint U-bolts at rear axle. Disconnect brake hose at frame cross member. Remove brake hose at axle. Place jack under each rear spring. Remove spring clip nuts, clips, and plates. Remove jacks from under springs, place between frame and spring, and spread spring. Remove axle, sliding it to left until right end clears spring, then slide to right and remove.

b. Installation. Install axle assembly on springs. Remove jacks from between springs, and place under each spring. Position axle on springs. Install spring clips, plates, lock washers, and nuts. Tighten nuts securely. Remove jacks from under springs. Attach propeller shaft. Draw universal joint U-bolts up evenly. Attach brake hose at axle, then at frame cross member. Check axle lubricant.

Remove master cylinder inspection cover on toe-board between foot pedals. Fill master cylinder, and bleed brakes (par. 181*s*). Replace master cylinder inspection cover. Adjust brakes if necessary (par. 178*b*). Install wheels. Lower vehicle to floor.

Section XX. BRAKES

176. Description and Data

a. DESCRIPTION. The service or foot brake system is of the hydraulic type with brakes in all four wheels (fig. 45). The parking or hand brake is cable controlled and mounted on the rear side of the transfer (fig. 23). The service or foot brakes are of the two-shoe, double-anchor type. The brake pedal, through a connection, operates a piston in the master cylinder to force brake fluid through the lines to the brake cylinders in the wheels. The fluid enters the wheel cylinders between two pistons of equal diameter, forcing them apart to apply the brake shoes against the drums. Releasing the brake pedal permits the brake fluid to flow back through the lines to the master cylinder. Adjustments are provided to compensate for wear of the brake linings. The hand brake is designed for parking the vehicle, or as an emergency brake. The hand brake lever is located at the center of the instrument panel. Pulling out on the lever draws a flexible cable through a conduit to actuate the brake shoes at the rear of the transfer case.

b. DATA.

Service brakes:	
Type	Hydraulic.
Size	9 in x 1¾ in.
Fluid capacity	½ pt.
Master cylinder:	
Type	Reservoir and cylinder.
Size	1 in.
Wheel cylinders:	
Type	Straight bore.
Size:	
Front	1 in.
Rear	¾ in.
Brake shoes:	
Lining length-forward shoe (moulded)	10$^{7}/_{32}$ in.
Lining length-reverse shoe (moulded)	6$^{39}/_{64}$ in.
Width	1¾ in.
Thickness	$^{7}/_{32}$ in.
Hand brake:	
Type	Mechanical, internal expanding.
Width	1¾ in.
Thickness	$^{7}/_{32}$ in.

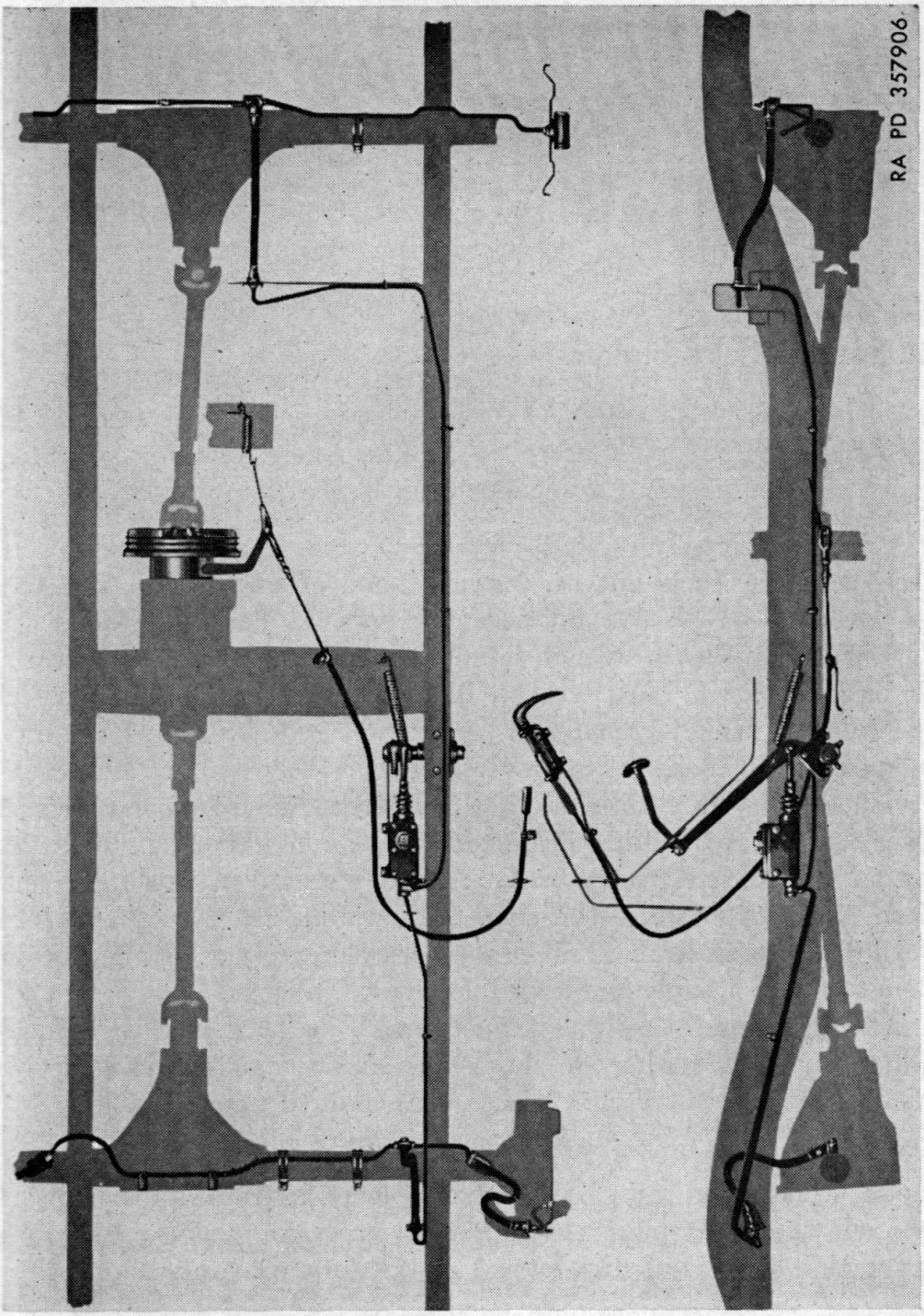

Figure 45. Brake system.

177. Maintenance

The service or foot brakes require periodic checking of the brake fluid supply in the master cylinder. Keep master cylinder supplied with fluid to avoid air entering the lines. Wheel bearings and brakes must be properly adjusted to provide emergency stops. All brake lines, hoses, and connections must be tight and leakproof. Scored brake drums or saturated brake linings must be replaced. Clean brake drums when wheels are removed. Brake anchor bolt and eccentric adjustment bolt lock nuts must be kept tight. Brake backing plate screws and axle spring clips must be kept tight. Brake pedal must have ½-inch free travel to assure full release of brakes. Brake control linkage must be free to operate, and should be inspected periodically for condition.

178. Service (Foot) Brakes

a. Adjustment (Minor). Adjust brake pedal free play to one-half inch by lengthening or shortening brake master cylinder eye bolt. Set lock nut securely. Raise vehicle until tires clear floor.

Note. Do not adjust brakes when drums are hot.

Loosen eccentric lock nut on forward shoe of one brake (fig. 46). Place wrench—41–W–986 on eccentric so that handle extends up. Rotate wheel, and turn wrench handle toward wheel rim, or forward, until brake drags. Turn wrench in opposite direction until wheel turns freely. Hold wrench on eccentric, and tighten lock nut. Loosen eccentric lock nut on reverse shoe. Place wrench on eccentric with handle up. Rotate wheel, and turn wrench toward wheel rim, or to the rear, until brake drags. Turn wrench in opposite direction until wheel turns freely. Hold wrench on eccentric, and tighten lock nut. Make the same adjustment on the other wheel brakes. Replenish brake fluid in master cylinder (par. 179). Lower vehicle to floor. Apply brake pedal to test brakes.

b. Adjustment (Major). Adjust brake pedal free play to one-half-inch by lengthening or shortening brake master cylinder eye bolt. Set lock nut securely. Raise vehicle until tires clear floor.

Note. Do not adjust brakes when drums are hot.

Remove wheel stud nuts, and remove wheels from hubs. Insert 0.008-inch thickness gage through slot in brake drums, and turn drum so that gage is at upper (toe) end of forward brake lining.

Note. Check clearance 1-inch from end of lining.

Loosen eccentric lock nut on forward brake shoe. Place wrench on eccentric so that handle is up, and turn wrench handle toward wheel rim, or to the rear, until 0.008-inch clearance is obtained by fee of gage. Hold wrench on eccentric, and tighten lock nut. Remove

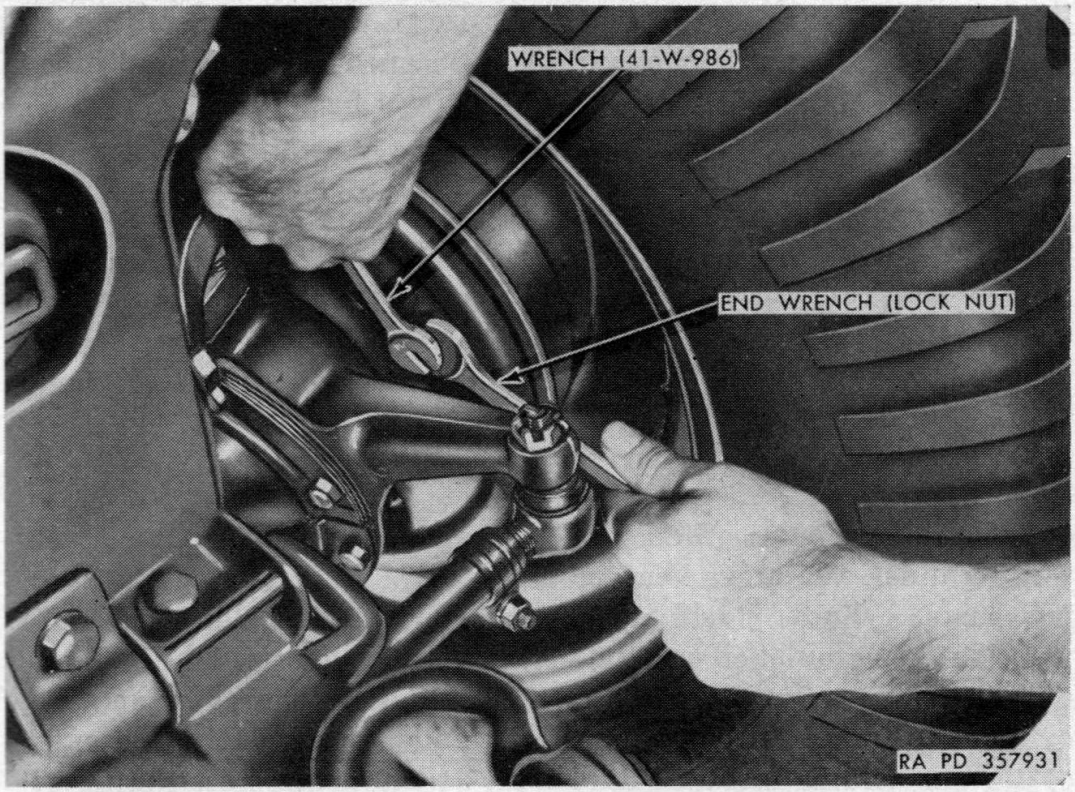

Fiqure 46. Brake adjustment with wrench—41–W–986.

0.008-inch thickness gage, and insert 0.005-inch gage in slot. Turn brake drum so that gage is at lower (heel) end of forward brake shoe lining. Loosen lock nut on anchor pin of forward shoe. Place wrench on anchor pin with handle down, and punch marks on ends of anchor pins toward each other; turn wrench toward rim, or forward, until 0.005-inch clearance is obtained by feel of gage. Hold anchor pin and tighten lock nut. Turn brake drum so gage is at lower end of reverse brake shoe lining. Loosen anchor pin lock nut on reverse shoe. Place wrench on anchor pin with handle down, and punch mark on end of anchor pin toward other anchor pin; turn wrench handle toward rim, or to the rear, until 0.005-inch clearance is obtained by feel of gage. Hold anchor pin and tighten lock nut. Follow same procedure on the other three brakes. Check amount of fluid in master cylinder (par. 179), and apply foot brake pedal to test brakes. Bleed brakes if soft pedal is experienced (par. 181*s*). Install wheel. Lower vehicle to floor.

c. Removal of Brake Shoes and Linings. Raise vehicle. Remove wheel hubs (par. 158*b*). Loosen eccentric lock nuts (fig. 46). Turn eccentric so that low side is against the shoes. Install brake cylinder clamp to hold pistons in place. Remove brake shoe return spring. Remove anchor pin nuts, lock washers, anchor pins, and anchor pin plate from backing plate. Remove brake shoes. Remove brake shoe anchor pin cam. Inspect exterior of wheel brake cylinder for leakage of brake fluid. If leakage is apparent, replace cylinder assembly (par. 180).

d. INSTALLATION OF BRAKE SHOES AND LININGS. Install cam in brake shoes. Install anchor pin plate on anchor pins; install pins in brake shoes, and mount assembly on brake backing plate.

Note. Forward shoe has longest lining.

Install brake return spring, and remove brake cylinder clamp. Install brake anchor pin lock washers and nuts.

Note. Turn brake anchor pins so that punch marks on ends are toward each other. Do not tighten anchor nuts.

Install hubs (par. 158*c*). Make major brake adjustment (*b* above).

179. Master Cylinder

a. REMOVAL. Raise hood and disconnect battery ground at battery terminal. Remove vent tube (fig. 47). Remove two bolts holding master cylinder shield and remove shield. Pull stop light switch wires out of terminal on switch. Remove stop-light switch. Remove outlet fitting screw. Remove master cylinder front screw attaching cylinder to frame. Remove master cylinder rear bolt nut. Remove cotter pin holding master cylinder tie bar on pedal cross shaft. Remove master cylinder boot (fig. 47). Remove master cylinder and tie bar. Remove tie bar from master cylinder.

b. INSTALLATION. Fill master cylinder with brake fluid. Install tie bar and rear bolt on master cylinder, and install master cylinder in frame with tie bar on pedal shaft. Install cotter pin in pedal shaft. Install eye bolt link in cylinder. Install master cylinder front screw,

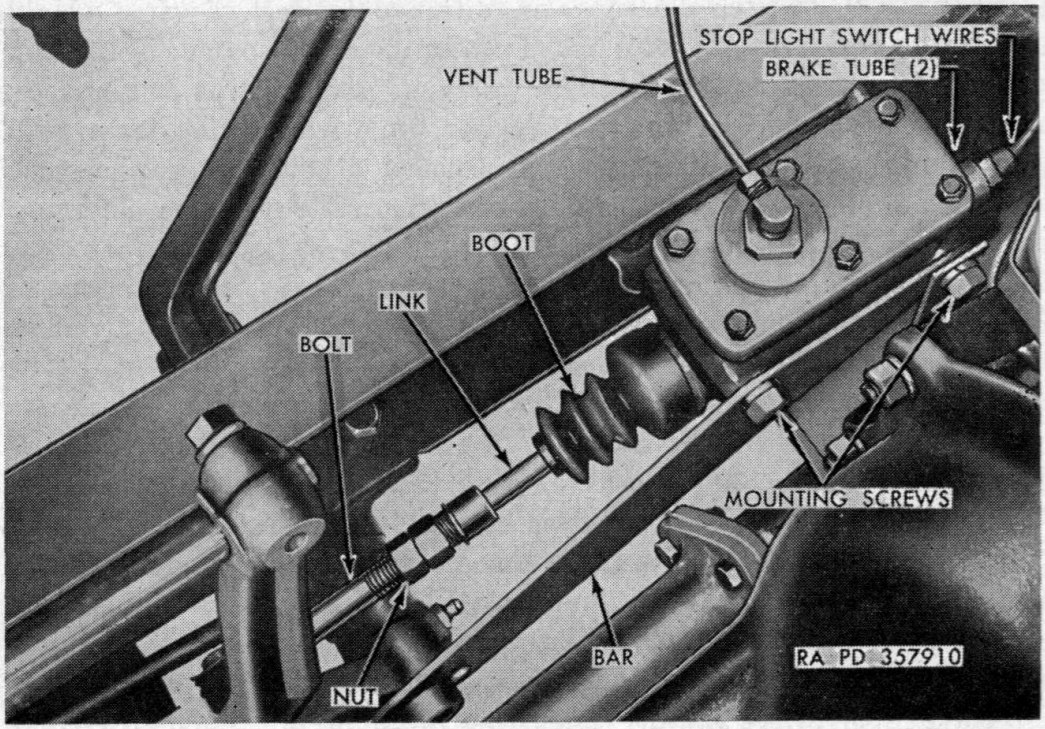

Figure 47. Brake master cylinder.

and tighten rear bolt. Install master cylinder boot with drain hole down. Install outlet fitting bolt. Install stop light switch. Insert stop light wires in terminals. Install master cylinder shield with two bolts. Bleed brakes (par. 181*s*). Attach battery ground cable. Lower hood and hook.

180. Wheel Cylinder

a. Removal. Raise vehicle so that tire clears floor. Remove wheel and hub (par. 158*b*) Remove brake shoe return spring. Spread shoes until clear of brake cylinder. Disconnect brake tube at backing plate. Remove two screws holding cylinder to backing plate, and remove cylinder.

b. Installation. Place cylinder in position on backing plate, and attach with two screws and lock washers. Attach brake tube. Enter brake shoes in slots of cylinder pistons. Install brake shoe return spring. Replace wheel and hub (par. 158*c*). Bleed brake (par. 181*s*). Apply foot brake pedal to test brakes. If soft pedal is experienced, bleed all brakes. Lower vehicle to floor.

181. Flexible Lines, Hoses, and Connections

a. Removal of Brake Hose at Front Wheels (fig. 45). Remove brake tube connections at each end. With screwdriver slip hose lock off ends of hose fitting, and remove hose.

b. Installation of Brake Hose at Front Wheels (fig. 45). Place hose in brackets and drive locks into place in the fittings. Attach brake tube connections. Bleed brake. Press brake pedal; if soft pedal is experienced, bleed all brakes (*s* below).

c. Removal of Brake Hose at Frame and Front Axle (fig. 45). Remove brake tube connection at frame bracket, upper end of hose. With screwdriver, remove hose spring lock from fitting at bracket. Remove fitting from bracket. Unscrew brake hose lower fitting from T-connection on axle and remove.

d. Installation of Brake Hose at Frame and Front Axle (fig. 45). Screw brake hose lower fitting into T-connection on axle. Insert upper fitting into bracket, and install spring lock. Attach brake tube connection. Bleed both front brakes (*s* below). Press brake pedal; if soft pedal is experienced, bleed all brakes (*s* below).

e. Removal of Rear Brake Hose (fig. 45). Remove brake tube connection frame cross member. With screwdriver, drive brake hose spring lock off hose fitting. Remove hose from frame. Unscrew hose fitting from T-connection on rear axle housing.

f. Installation of Rear Brake Hose (fig. 45). Screw brake hose into T-connection on rear axle housing. Insert hose fitting into frame, and drive spring lock into fitting. Attach tube connection.

Bleed both rear brakes (*s* below). Press brake pedal; if soft pedal is experienced, bleed all brakes (*s* below).

g. Removal of Master Cylinder to Front Hose Brake Tube (fig. 47). Remove clip from frame. Disconnect tube from brake hose fitting (frame to axle). Disconnect tube from master cylinder connection and remove tube.

h. Installation of Master Cylinder to Front Hose Brake Tube (fig. 47). Connect tube at master cylinder. Connect tube at brake hose (frame to front axle). Install tube clip at frame. Bleed front brakes (*s* below). Press brake pedal; if soft pedal is experienced, bleed all brakes (*s* below).

i. Removal of Master Cylinder to Rear Hose Brake Tube (fig. 47). Remove clip on underside of frame rear cross member. Remove clip on frame side member. Disconnect tube at rear brake hose. Remove master cylinder shield. Disconnect tube at master cylinder. Withdraw tube to rear of vehicle.

j. Installation of Master Cylinder to Rear Hose Brake Tube (fig. 47). Install tube in frame side member. Connect tube to master cylinder, and install master cylinder shield. Install tube in frame rear cross member, and attach to hose fitting. Install tube clips on frame side member and rear cross member. Bleed rear brakes (*s* below). Press brake pedal; if soft pedal is experienced, bleed all brakes (*s* below).

k. Removal of Tee to Left Front Hose Brake Tube (fig. 45). Disconnect brake tube at tee connection. Disconnect tube at brake hose fitting and remove tube.

l. Installation of Tee to Left Front Hose Brake Tube (fig. 45). Connect brake tube at tee connection. Connect tube at hose fitting. Bleed left brake (*s* below). Press brake pedal; if soft pedal is experienced, bleed all brakes (*s* below).

m. Removal of Tee to Right Front Hose Brake Tube (fig. 45). Remove clips and clamps on axle. Disconnect tube at tee connection. Disconnect tube at hose fitting and remove tube.

n. Installation of Tee to Right Front Hose Brake Tube (fig. 45). Connect brake tube at tee connection. Connect tube at brake hose fitting. Install clips and clamps on axle. Bleed right front brake (*s* below). Press brake pedal; if soft pedal is experienced, bleed all brakes (*s* below).

o. Removal of Front Wheel Cylinder to Hose Brake Tube (fig. 45). Disconnect tube at brake hose. Disconnect tube at wheel cylinder and remove tube.

p. Installation of Front Wheel Cylinder to Hose Brake Tube (fig. 45). Attach brake to wheel cylinder. Attach tube to hose fitting. Bleed brake (*s* below). Press brake pedal; if soft pedal is experienced, bleed all brakes (*s* below).

q. Removal of Tee to Right Rear Brake Tube (fig. 45). Disconnect brake tube at tee connection. Disconnect tube at wheel cylinder. Remove tube clamp on axle. Bend tube slightly and remove.

r. Installation of Tee to Rear Brake Tube (fig. 45). Attach brake tube to wheel cylinder. Attach tube to tee connection. Install clamp on axle. Bleed brake (*s* below). Press brake pedal; if soft pedal is experienced, bleed all brakes (*s* below).

s. Bleeding Brakes. Remove screws holding brake master cylinder inspection cover to toeboard between foot pedals and remove cover. Reach through hole, and clean around master cylinder filler cap. Remove cap and fill master cylinder with brake fluid. Replace cap temporarily. Clean all bleeder connections at wheel cylinders. Attach bleeder hose to *right rear* wheel cylinder bleeder screw, and place end in a glass jar or bottle so that the end is submerged in brake fluid. Open bleeder screw a three-quarter turn. Press brake pedal by hand, allowing it to return slowly. Continue action until air bubbles cease to appear at end of bleeder hose. Tighten bleeder screw and remove hose. Follow the same procedure on the *right front* brake, then the *left rear*, and finally, the *left front* brake. Replenish master cylinder brake fluid supply. Install filler cap and inspection cover.

182. Parking (Hand) Brake

(Fig. 48)

a. Adjustment. Place hand brake grip in released position. Check brake levers to see that cable is free and released. Rotate the brake drums until one pair of the three sets of holes are over the shoe adjusting screw wheel in the brake. Use the edge of the holes in the brake drums as a fulcrum for a suitable adjusting tool or screwdriver to rotate each notched adjusting screw by moving the handle of the tool away from the center of the drive shaft until the shoes are snug in the drum. Back off seven notches on the adjusting screw wheel to secure proper running clearance between the shoe and the drum.

b. Removal. Remove the four universal joint flange attaching nuts and lower the propeller shaft. Remove the retracting spring clevis pin and the spring clip. Remove the cotter pin, the nut and washer from the transfer output shaft. Remove companion flange and brake drum. Remove the two brake shoe retracting springs and brake shoes.

c. Installation. Place a light film of grease on the brake actuating cam and install the shoes. Install the black shoe return spring next to the cam and the yellow spring next to the notched adjusting

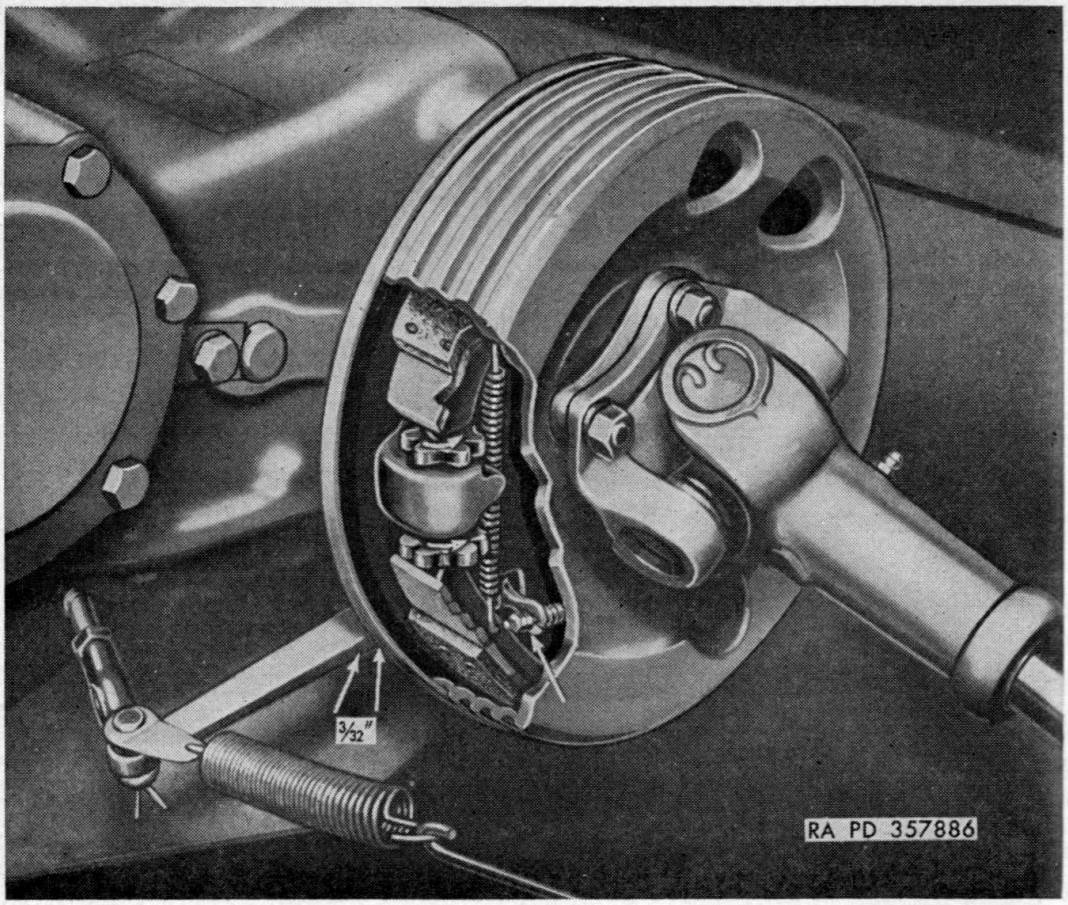

Figure 48. Parking (hand) brake.

wheel screw. Place the brake drum and universal joint flange in position, and install the transfer output shaft washer, nut and cotter pin. Tighten the clevis lock nut. Connect the propeller shaft. Install retracting spring clip, clevis pin and cotter pin. Install the retracting spring link and spring. Adjust brake as outlined in *a* above.

Section XXI. SPRINGS AND SHOCK ABSORBERS

183. Description and Data

a. Description. All the springs are semi-elliptic leaf type (figs. 49 and 50), with double wrapped eyes. Each spring has four rebound clips which serve to hold the leaves in alinement and hold the leaves together to take the rebound. Threaded U-bolt shackles (fig. 51) mount the front end of the front springs and the rear end of the rear springs. Left-hand thread shackle and bushings are used in the spring eye of the left front and right rear springs. These shackles have a small forged bar on the lower shank and the bushings have a groove cut around the hexagon head. A pivot bolt (fig. 52) is used to mount the rear end of the front springs and front end of the rear springs to the frame bracket. The shock absorbers are hydraulic cylinder, direct-acting, two-way control units and are mounted in rubber bushings. These units are nonadjustable and nonrefillable.

b. DATA.

Front springs:	
Length-center line of eyebolts	36¼ in.
Width	1¾ in.
Number of leaves	10.
Bushed eye	rear.
Rear spring:	
Length-center line of eyes	42 in.
Width	1¾ in.
Number of leaves	11.
Bushed eye	front.
Shock absorbers:	
Type	Hydraulic.
Action	Double.
Length-compressed front	10 15/16 in.
Length-compressed rear	10 15/16 in.
Length-extended front	17 7/16 in.
Length-extended rear	17 7/16 in.
Adjustable	no.
Refillable	no.
Mounting	Rubber bushings.

184. Maintenance

The springs and shock absorbers should be inspected periodically for wear and breakage. The spring shackles should be lubricated in accordance with the lubrication order (fig. 9). The spring pivot ends require no lubrication. The shock absorbers require no attention except to replace inoperative or damaged units and worn rubber mounting bushings.

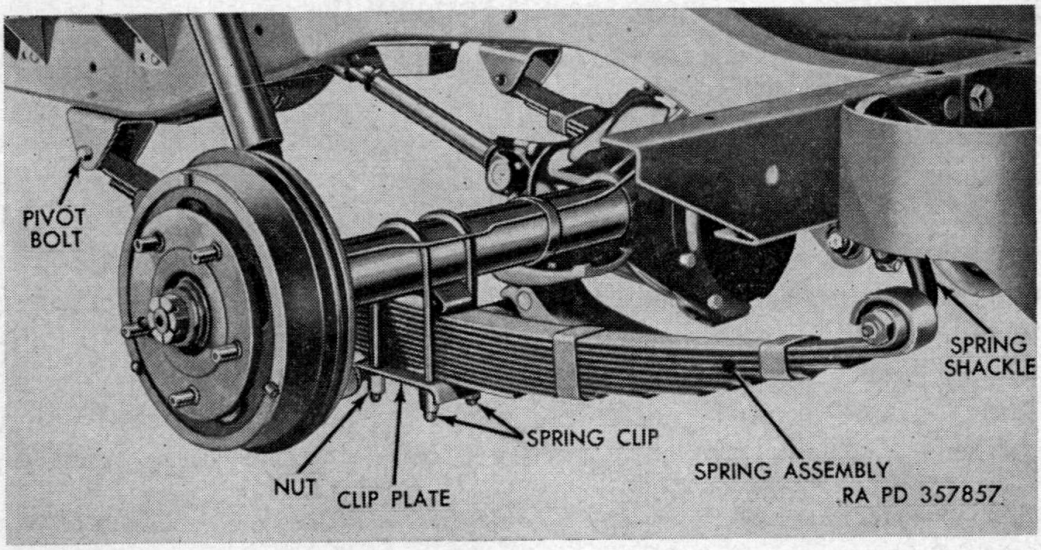

Figure 49. Rear spring mounting.

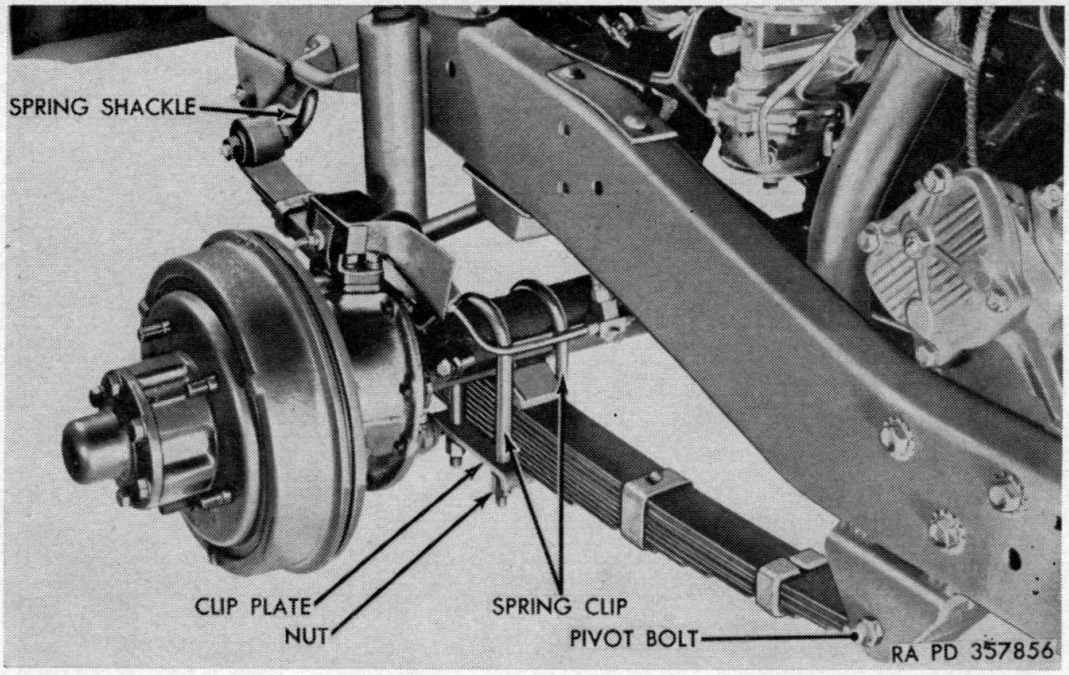

Figure 50. Front spring mounting.

185. Spring Shackles and Pivot Bolts

a. Removal of Pivot Bolt. Raise vehicle frame until tires just rest on the floor. Remove pivot bolt nut and drive out the pivot bolt (fig. 52).

b. Installation of Pivot Bolt. Line up holes in spring bracket and spring and drive pivot bolt in place. Install nut and tighten securely.

c. Removal of Spring Shackles. Raise vehicle frame until tires just rest on floor. Remove shackle bushings (fig. 51).

Note. Left-hand threaded bushings are used in spring end of shackles on left front and right rear springs.

d. Installation of Spring Shackles. Install shackle grease seal retainer and grease seal over threads and up to shoulder. Insert the shackle through the frame bracket and spring eye, giving careful attention to the proper threads. Hold shackle tightly against frame and start upper bushing running in about half-way. Then start lower bushing, holding shackle tightly against spring eye and run in half-way. Then alternately tighten bushings until upper bushing is tight against frame bracket and lower bushing is about $\frac{1}{32}$ inch away from spring eye. Lubricate and try flex of the shackle. This must be free. If tight, remove bushing and reinstall.

186. Springs

a. Removal. Remove spring shackle and pivot bolt (par. 185*a* and *c*). Remove four axle clip nuts and lock washers. Remove spring plate and remove spring.

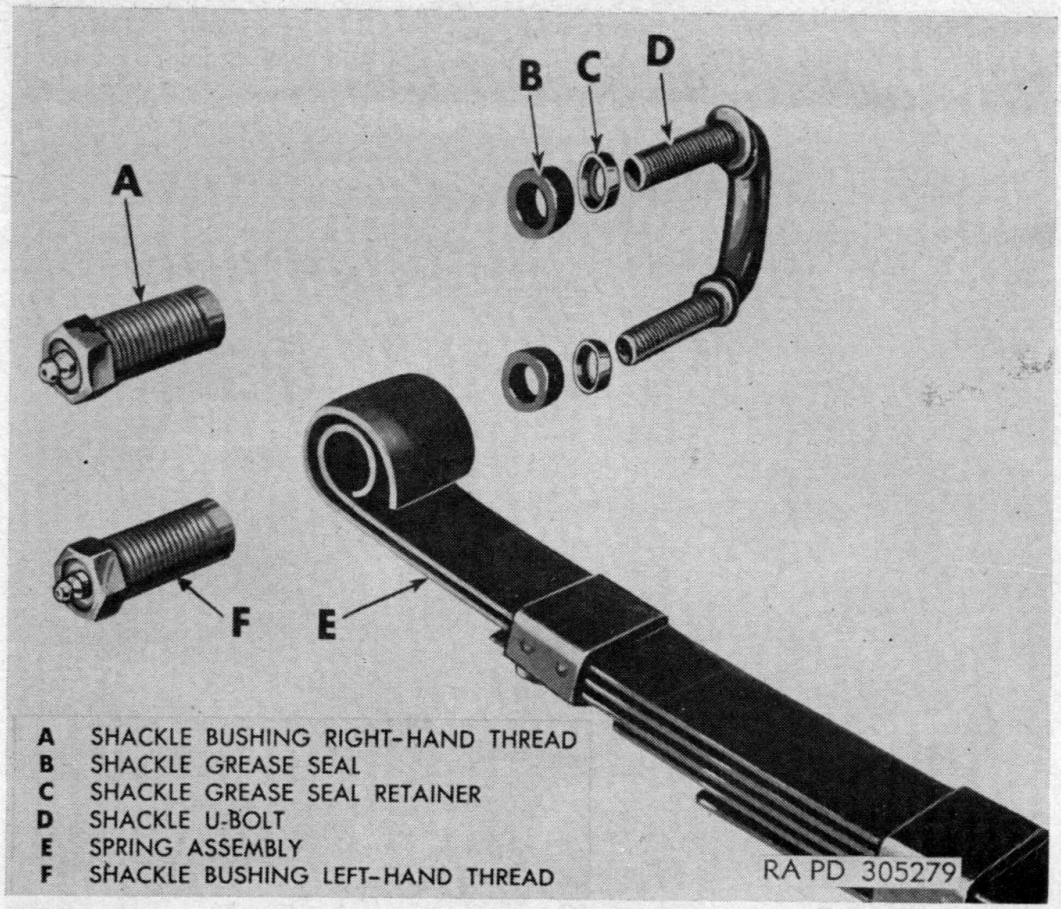

Figure 51. Shackle end of spring.

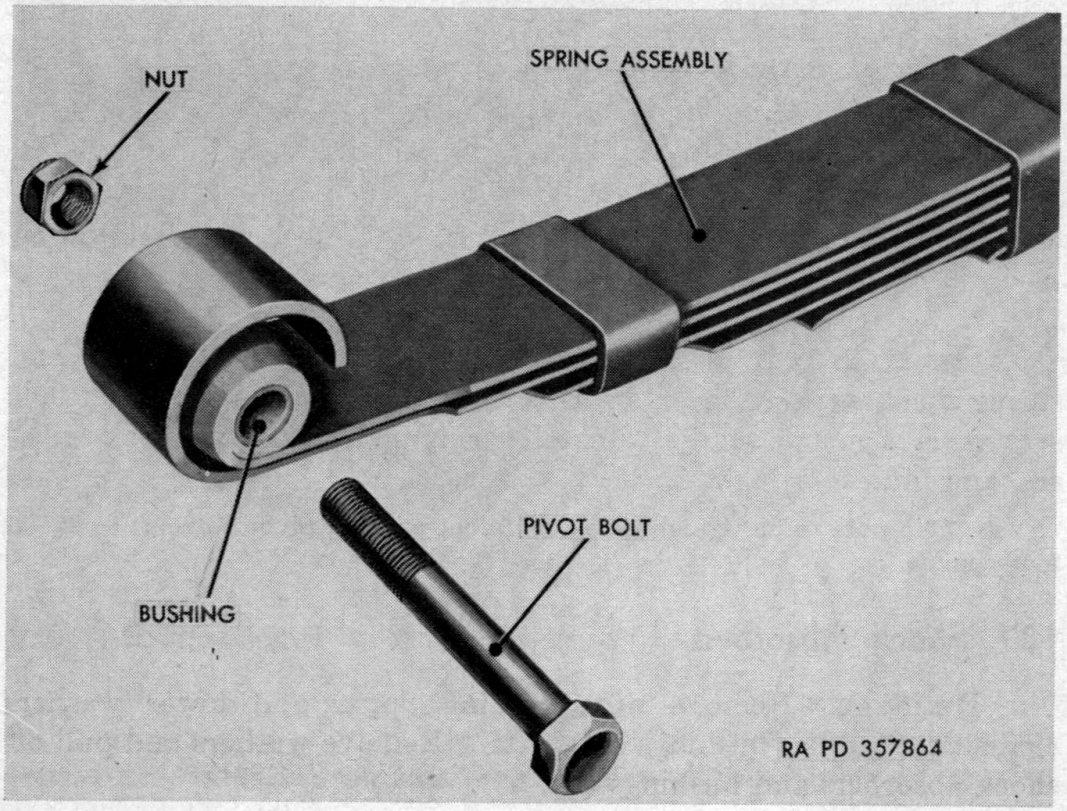

Figure 52. Pivot end of spring.

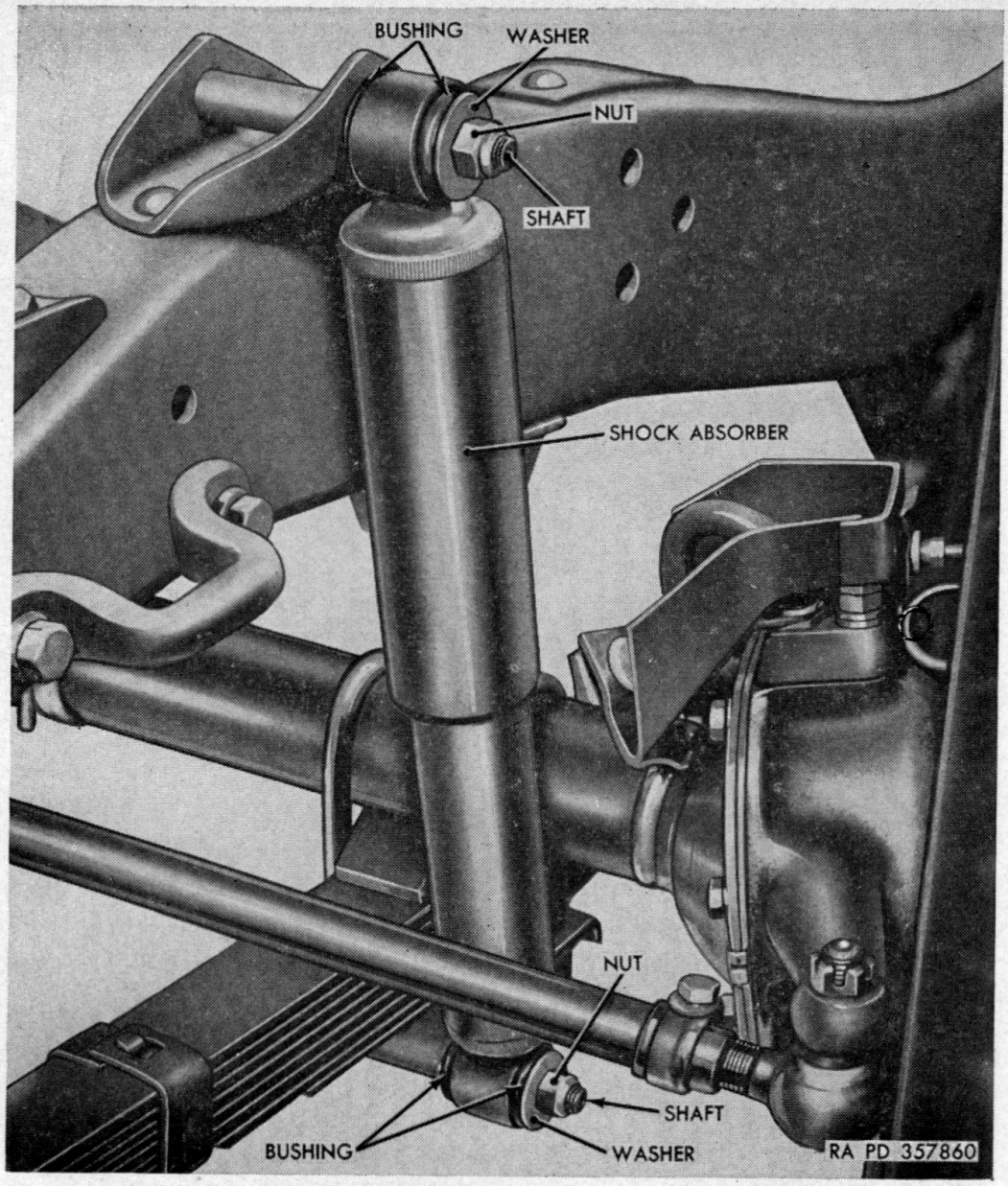

Figure 53. Shock absorbers.

b. INSTALLATION. Install pivot bolt (par. 185*b* and fig. 52) and spring shackle (par. 185*d*). Raise vehicle by frame spring center bolt sets in place on axle saddle. Install spring plate with clips, lock washers, and nuts.

Note. Clip nuts to be tightened to 50–55 foot-pounds; pivot bolt nut to 27–30 foot-pounds.

187. Shock Absorbers

a. REMOVAL. Remove nuts holding upper and lower washers against the rubber bushings on shafts. Remove washers and pull off shock absorbers and bushings (fig. 53).

b. INSTALLATION. Install inner rubber bushings on upper and lower shafts. Install shock absorber and outer bushings and flat washers. Install nuts and tighten until bushings show compression behind washer (fig. 53).

Section XXII. STEERING SYSTEM

188. Description and Data

a. DESCRIPTION. The steering gear (fig. 54) is of the conventional type, mounted on the left frame side member, and connected to the front axle steering bell crank by a Pitman arm and steering connecting rod (fig. 54). The steering gear is of the cam and lever type with a variable-ratio cam. The steering wheel is of the 3-spoke, safety type, with a 17¼-inch diameter. The steering connecting rod is of the adjustable, ball-and-socket type.

b. DATA.

Make and model	Ross T–12.
Type	Cam and twin pin lever.
Ratio	Variable; 14–12–14 to 1.
Wheel	3-spoke; safety type; 17¼ inch.

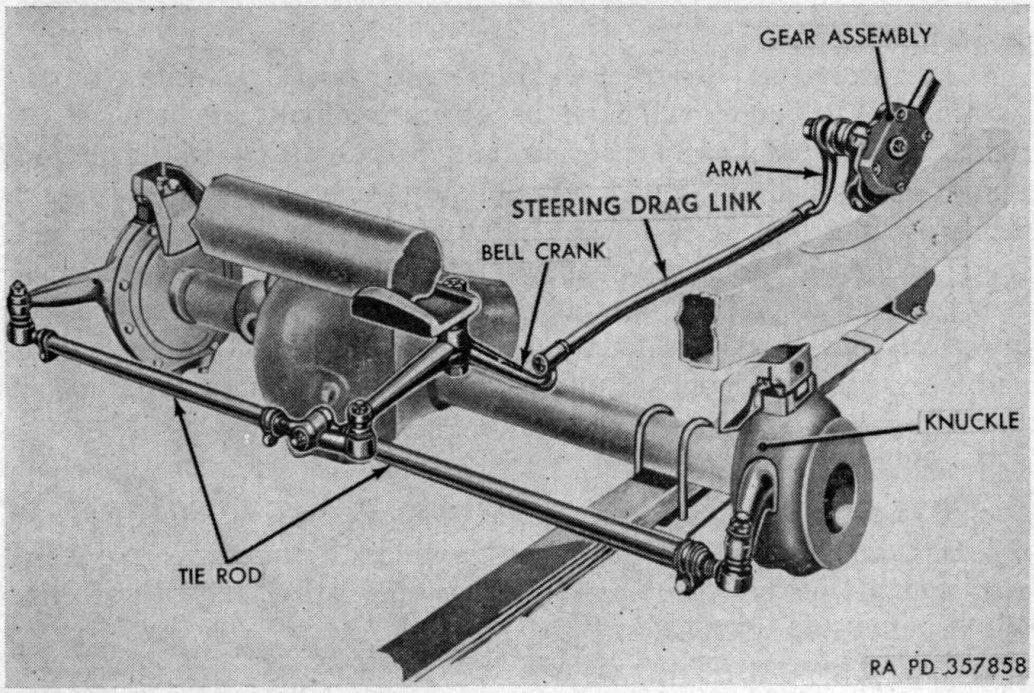

Figure 54. Steering system.

189. Maintenance

a. Maintenance consists primarily of proper lubrication (par. 36) and periodic inspection in accordance with preventive maintenance procedures (table II) to include the Pitman arm and steering connect-

ing rod (fig. 54). A systematic inspection for steering troubles is as follows:

(1) Equalize tire pressures and set car on level floor.
(2) Inspect kingpin and wheel bearing for looseness (par. 158).
(3) Check wheel run-out.
(4) Check for spring sag.
(5) Inspect brakes and shock absorbers.
(6) Check steering assembly and connecting rod.
(7) Check toe-in (par. 165).
(8) Check toe-out on turns.
(9) Check tracking of front and rear axle.
(10) Check frame alinement.

b. If steering difficulty is experienced after checking and correcting the above items, report to ordnance maintenance personnel as the trouble is no doubt due to improper wheel balance, caster, camber or kingpin inclination.

190. Steering Drag Link

(Fig. 54)

a. REMOVAL. Pull cotter pin at each end of rod. Unscrew plugs and remove rod.

b. INSTALLATION. Correct end of steering drag link to be attached so front axle bell crank will have the lubrication hydraulic fitting to the right. Install safety plug, spring, and ball seat in this end of rod. Install rod on bell crank ball. Install adjusting plug. Screw plug in firmly against ball, back off one-half turn, and lock with cotter pin. Insert ball seat in other end of rod. Install rod on steering Pitman arm. Install second ball seat, spring, safety plug, and adjusting plug in order. Screw plug in firmly against ball, back off one-half turn, and lock with cotter pin. Lubricate with high pressure gun.

191. Steering Wheel

a. REMOVAL. Raise hood, remove horn wire at steering post terminal, and tape end so it will not ground. Remove steering wheel nut, and lift off horn button. Pull steering wheel off with steering wheel puller—41–P–2954.

b. INSTALLATION. Set front wheels straight ahead. Install steering wheel so that one spoke of wheel is in vertical position above steering post. Drive wheel down on post. Install horn button and steering wheel nut. Untape horn wire, attach to steering post terminal, try horn, and lower hood.

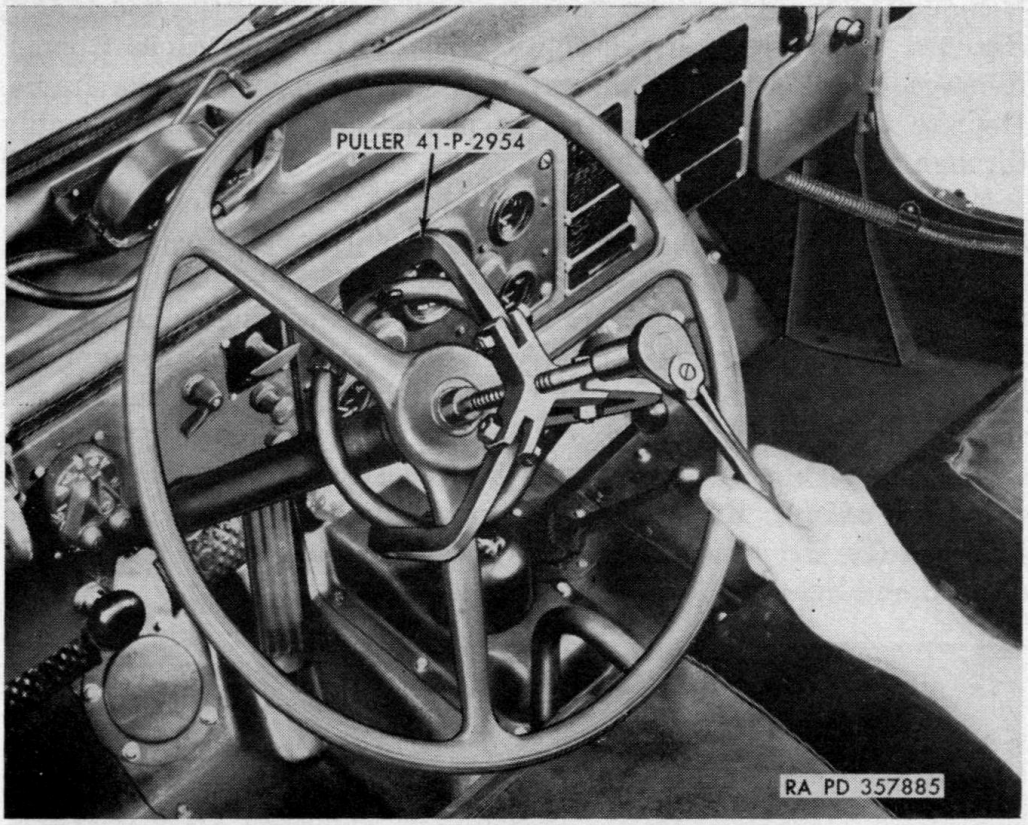

Figure 55. Steering wheel removal.

192. Steering Pitman Arm

(Fig 54)

a. Removal. Remove Pitman arm nut and lock washer Remove Pitman arm by using wedge type Pitman arm remover, or as follows: Drive a chisel between the arm and the steering gear case at the front side, and using a bar, strike rear side of arm to loosen it on the tapered serrations. Pull cotter pin in rear end of steering connecting rod, and remove adjusting plug. Take steering drag link off Pitman arm ball.

b. Installation. Turn steering wheel maximum distance to right; turn wheel to left, and count turns. Turn wheel to right exactly one-half of the turns. Install steering drag link on Pitman arm (par. 190*b*). Set front wheels in straight-ahead position, and install Pitman arm on steering gear. Install lock washer and nut. Tighten nut securely. Lubricate connecting rod hydraulic fitting.

193. Steering Gear

a. Removal. Raise hood and tie to windshield. Disconnect the Pitman arm (fig. 54) from the steering drag link rod. Disconnect the horn wire by removing the two screws at steering column. Remove the oil gage sending unit. Disconnect the brake master cylinder vent tube (fig. 47). Remove the clutch and brake pedal pads.

Remove the brake cylinder floor inspection cover on the floor board (fig. 5). Remove the steering post bracket at the instrument panel. Remove bolts attaching the steering gear housing to the frame. Depress the brake pedal as far as possible and pull the assembly through the toeboard opening.

b. INSTALLATION. Check steering gear lubricant; replenish if necessary. Insert upper end of steering gear through toeboard, and position in chassis. Install steering gear to frame bolts, but do not tighten. Install steering column floor seal, retainer and screws. Install steering column over tube, with horn contact brush opening up. Tighten steering column clamp. Install horn, and tighten screws. Attach steering column bracket, and tighten steering gear to frame bolts. Install steering wheel (par. 191*b*). Install steering connecting rod (par. 190*b*). Replace the steering column cover plate on the toeboard (fig. 5). Install the oil gage sending unit. Check operation of horn and lights. Lower hood and lock.

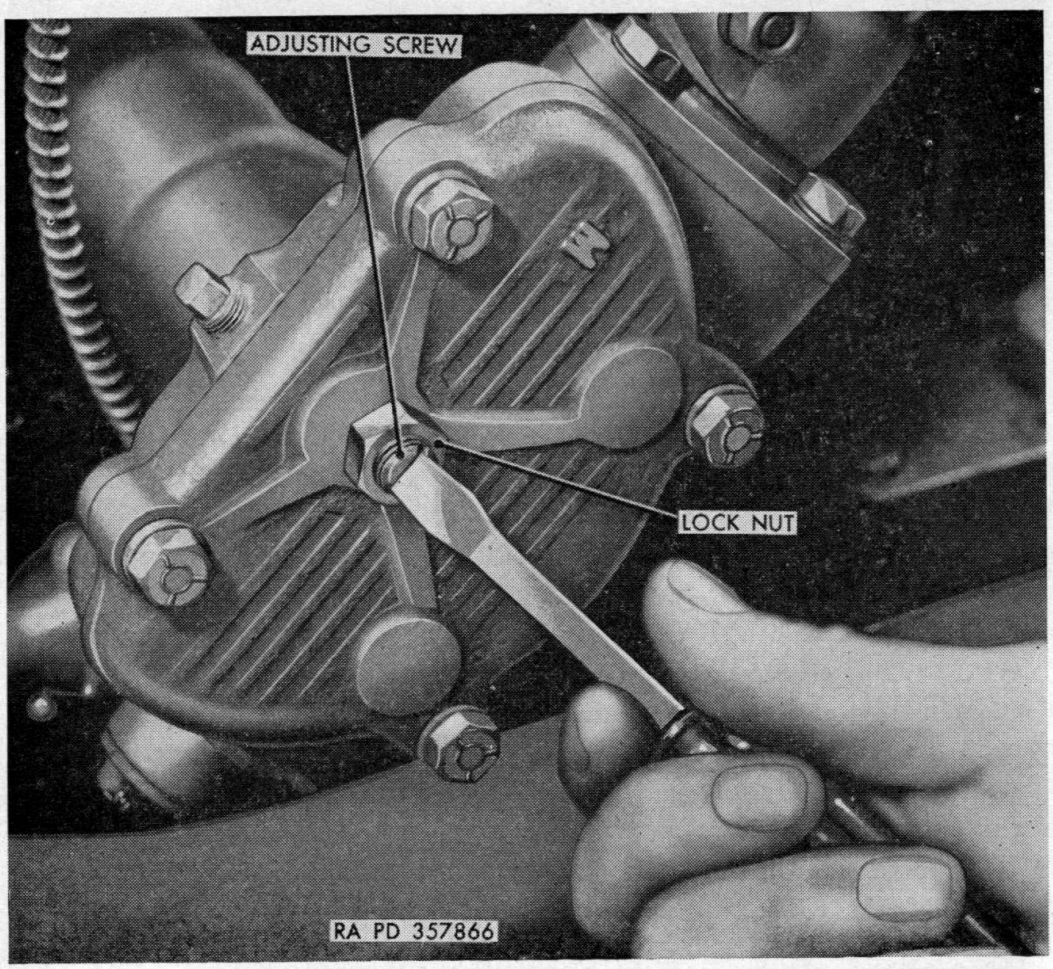

Figure 56. Steering gear adjustment.

c. ADJUSTMENT (fig. 56). Loosen lock nut on side adjusting screw. With front wheels straight ahead, adjust screw for minimum backlash of studs in cam groove. Tighten lock nut. For other adjustments, report to higher authority.

Section XXIII. BATTERIES AND LIGHTING SYSTEM

194. Description and Data

a. DESCRIPTION.

(1) *Batteries and cables* (fig. 57). Two 12-volt, lead and acid type batteries, connected in series, supply 24-volt primary current for vehicle operation. These batteries will not be damaged when under water and have a special plug which, when sealed properly, prevents entrance of water in battery cells. The terminals are waterproofed by a thick coating of heavy grease, after installation. Waterproof cables are used to connect battery to starter.

(2) *Headlights.* Service headlights, mounted in radiator guard (fig. 58) are waterproofed, double filament, sealed beam type. Upper and lower headlight beams are selected by a foot-operated dimmer switch.

(3) *Black-out driving light.* Black-out driving light (fig. 59), mounted on the forward section of the left fender, is a waterproof, sealed beam type. The black-out driving light is controlled by light switch (par. 216*c*) and furnishes a diffused, low intensity light.

(4) *Black-out marker light.* Black-out marker lights (fig. 60) are waterproofed and mounted on the radiator guard directly below the headlights. These lights are controlled by a light switch (par. 22).

(5) *Stop and tail lights.* The stop and tail lights (figs. 61 and 62), mounted at rear corners of truck, consist of two waterproof units—right-hand and left-hand assemblies. The right-hand light incorporates a black-out stop lamp in upper portion, and a black out tail lamp in lower portion. The left-hand light incorporates a combination stop and tail lamp in the upper portion, and a black-out tail lamp in the lower portion.

(6) *Trailer connection.* A four-terminal connector (fig. 63) is mounted at rear of vehicle, left of hinged tail gate. This connector provides means of connecting stop and tail lights on trailer with those on vehicle.

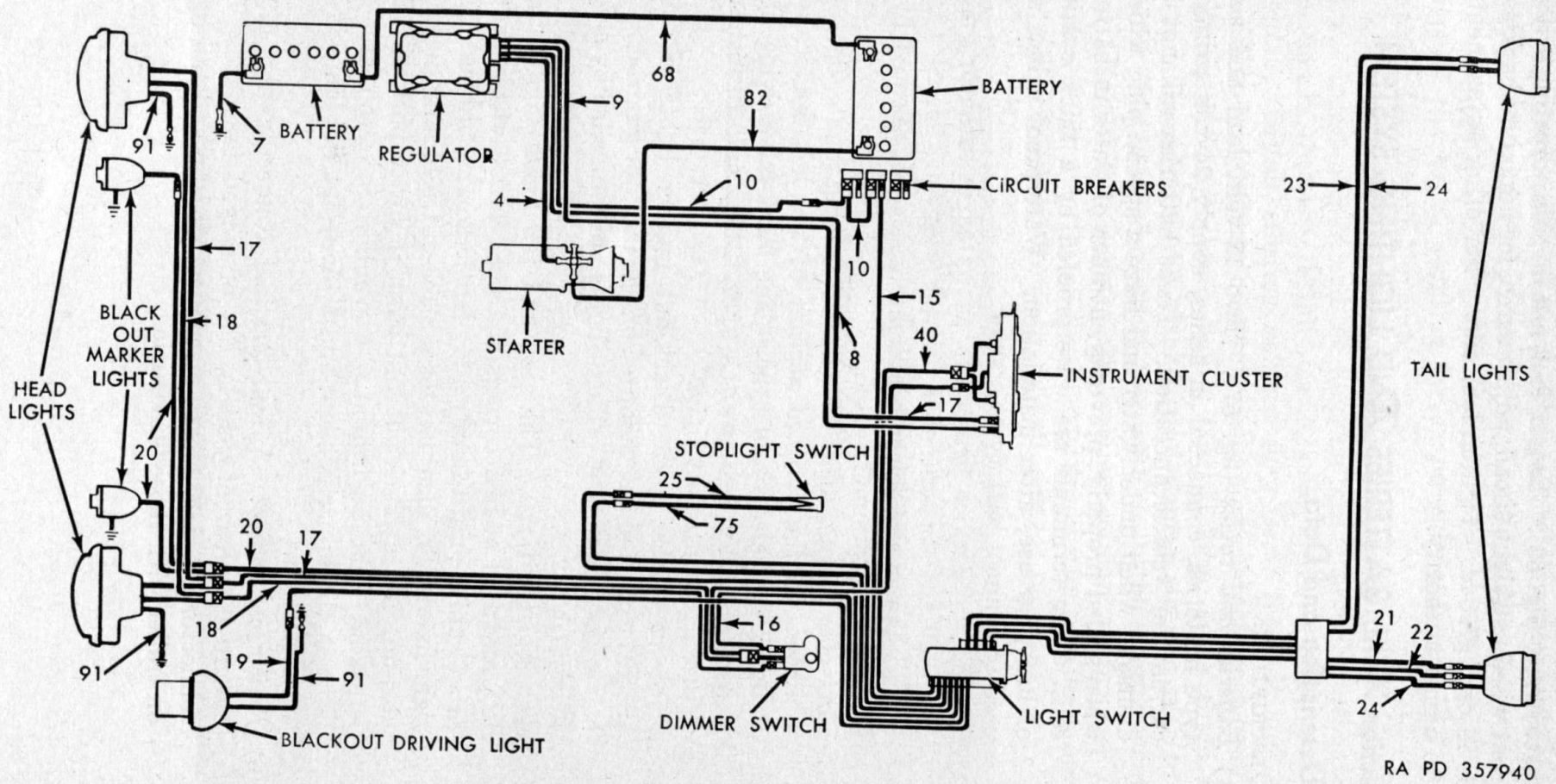

Figure 57. Light circuits.

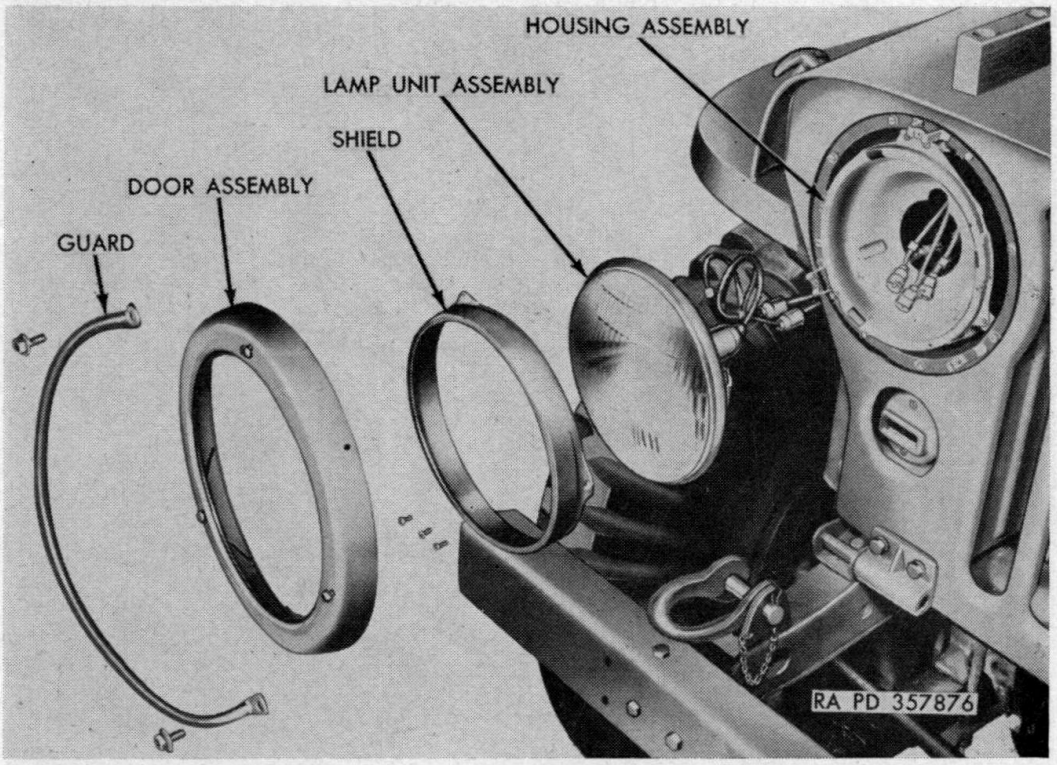

Figure 58. Head lamp replacement.

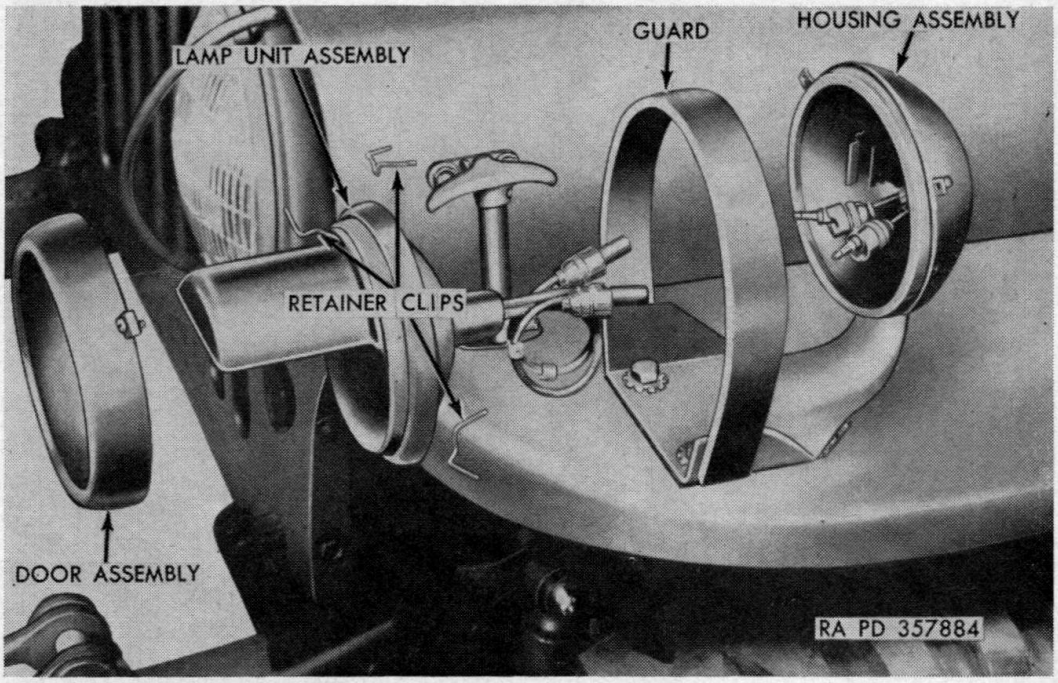

Figure 59. Black-out driving lamp unit replacement.

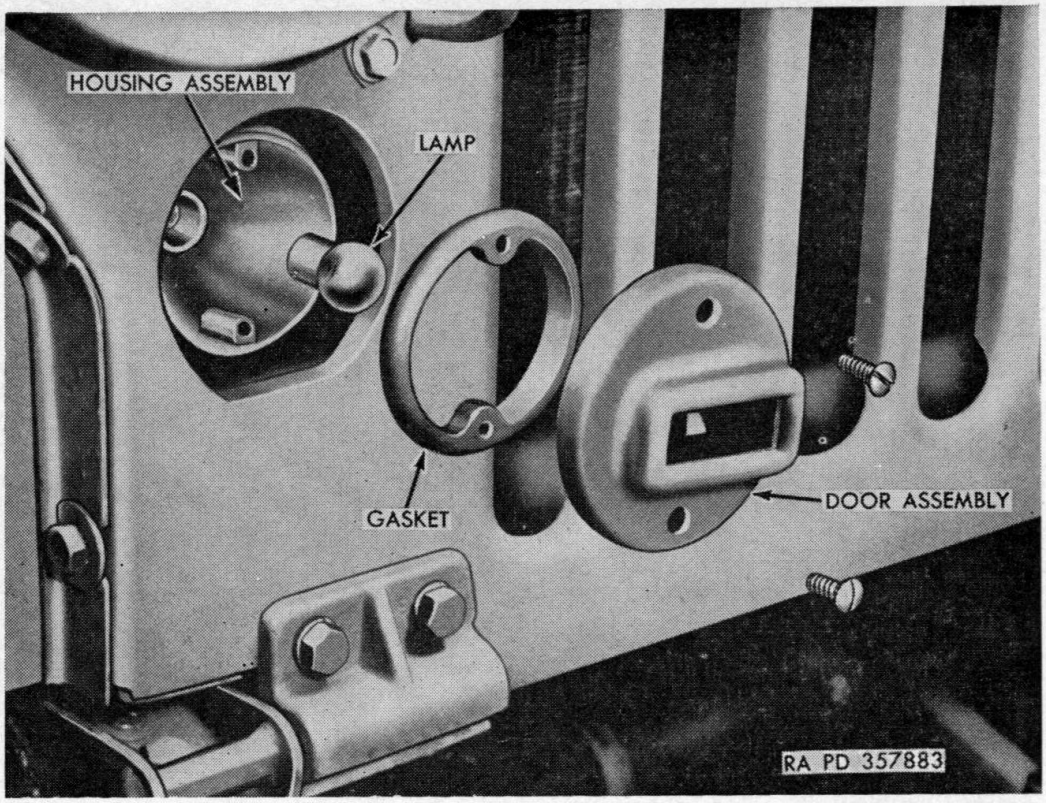

Figure 60. Black-out marker lamp replacement.

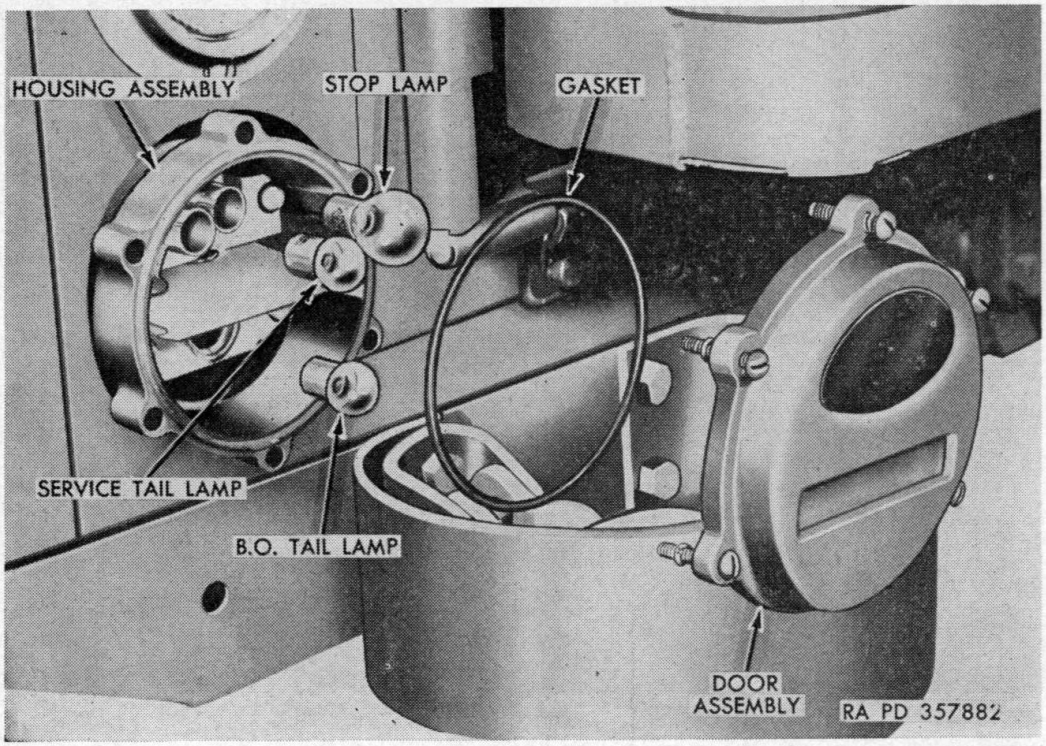

Figure 61. Tail and stop light replacement.

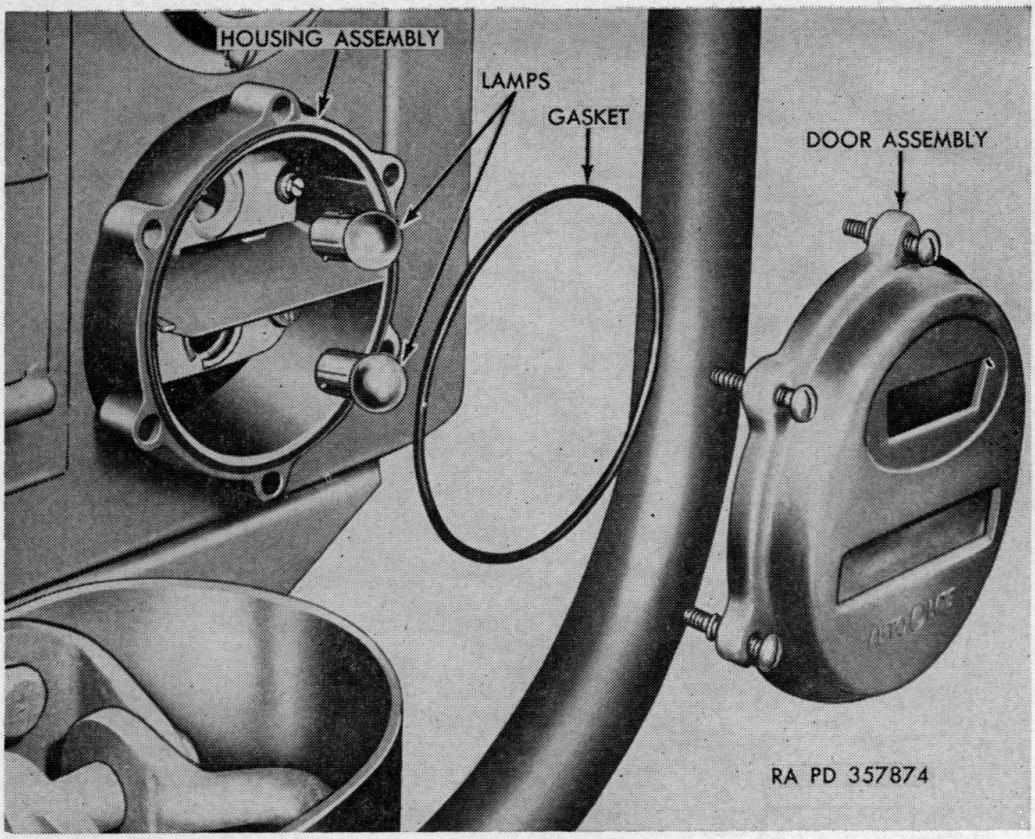

Figure 62. Tail lamp replacement.

(7) *Slave-battery receptacle.* The slave-battery receptacle is located on the right fender (fig. 63). The receptacle is wired in parallel with batteries. It is used to charge the batteries from an external source or to connect additional electrical power from an external source to operate electrical components.

(8) *Radio receptacle.* The radio receptacle is located in the body compartment on the body side of the right seat (fig. 64), and provides power connection for radio.

b. Battery Data.

Make	Auto-lite.
Model	2HN.
Voltage	12.
Plates per cell	11.
Number of batteries used	2.

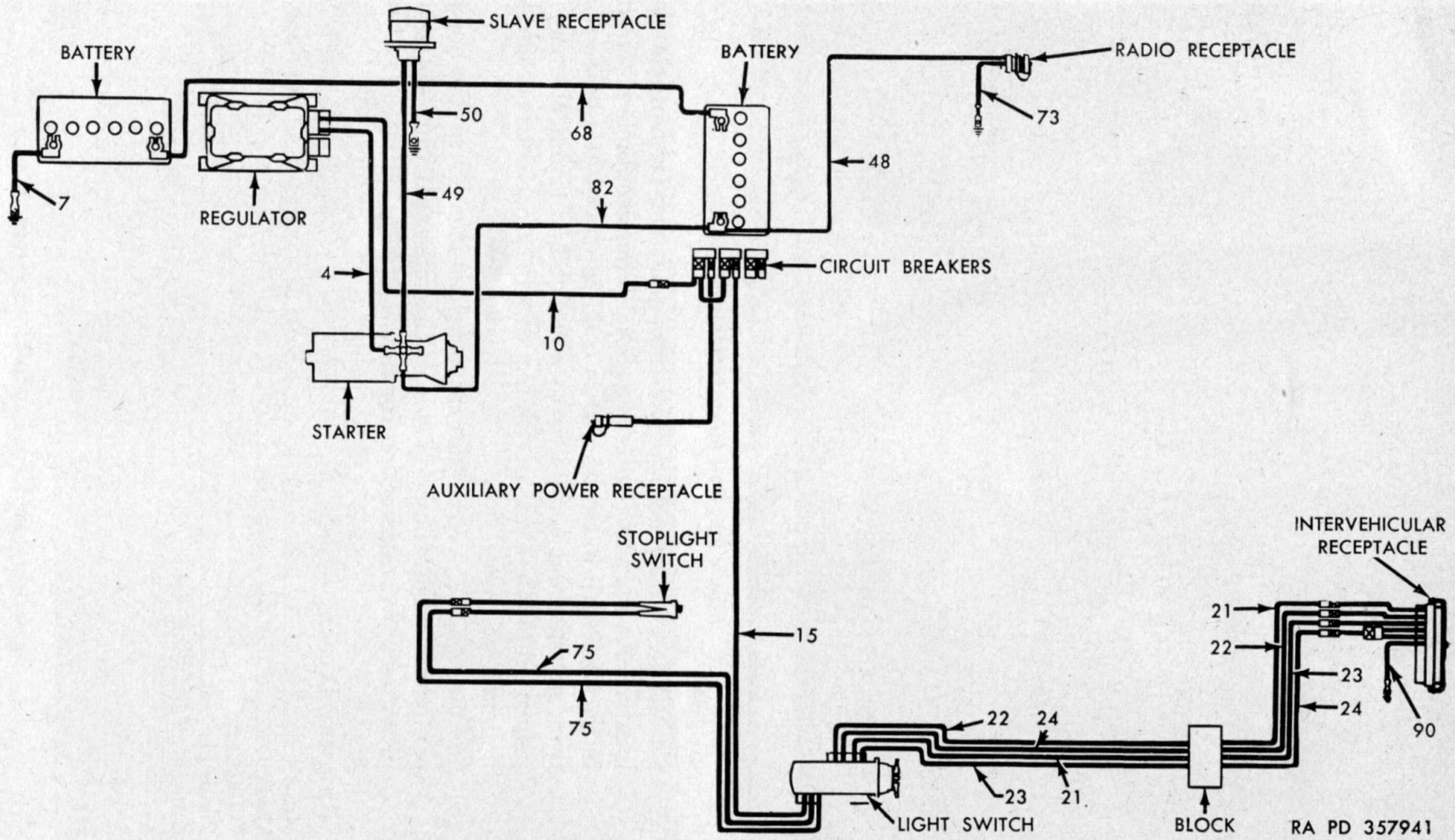

Figure 63. Auxiliary outlets.

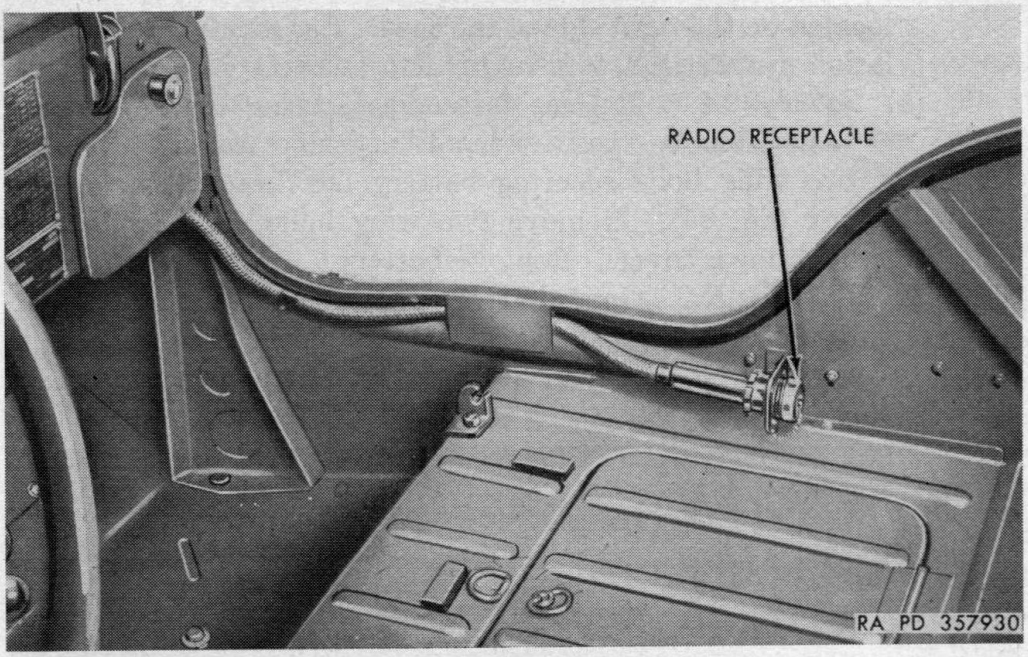

Figure 64. Radio receptacle.

195. Batteries and Cables

a. MAINTENANCE.

(1) *Specific gravity test.* Specific gravity testing of the battery electrolyte (battery fluid) determines the state of charge in each cell. Use a hydrometer and thermometer and correct hydrometer reading for temperature in accordance with table IV (par. 244). A corrected specific gravity reading of 1.285 in each cell indicates a fully charged battery. A specific gravity reading 1.225 or less in each cell indicates that battery must be recharged or replaced.

(2) *Adding water.* The water in the electrolyte solution will evaporate at high temperatures or with excessive charging rate. Inspect the electrolyte level and add distilled or clean water when necessary.

(3) *Cleaning.* Battery case must be kept cleaned. Keep battery terminals and posts clean. Clean battery carrier and post when corroded with an alkaline solution such as ammonia or a solution of bicarbonate of soda and water. After foaming stops, flush top of battery with clear water. If terminals and cable clamps are corroded, disconnect and clean in same manner.

b. REMOVAL.

(1) *General.* There are two batteries used to provide power for the vehicle. One is located on the right front fender splasher inside the hood. For removal and installation instructions, it is referred to as battery "A". The second battery is

located on the right side of the cowl. For removal and installation instructions, it is referred to as battery "B".

(*a*) *Battery "A."* Release fasteners securing top of battery box. Remove "positive" and "negative" cables. Remove two wing bolts securing battery box bracket to battery box (fig. 65). Remove two wing bolts securing battery hold down cover. Remove battery.

(*b*) *Battery "B."* Open battery box door. Remove "positive" and "negative" cables. Remove two wing bolts securing battery hold down cover. Remove battery.

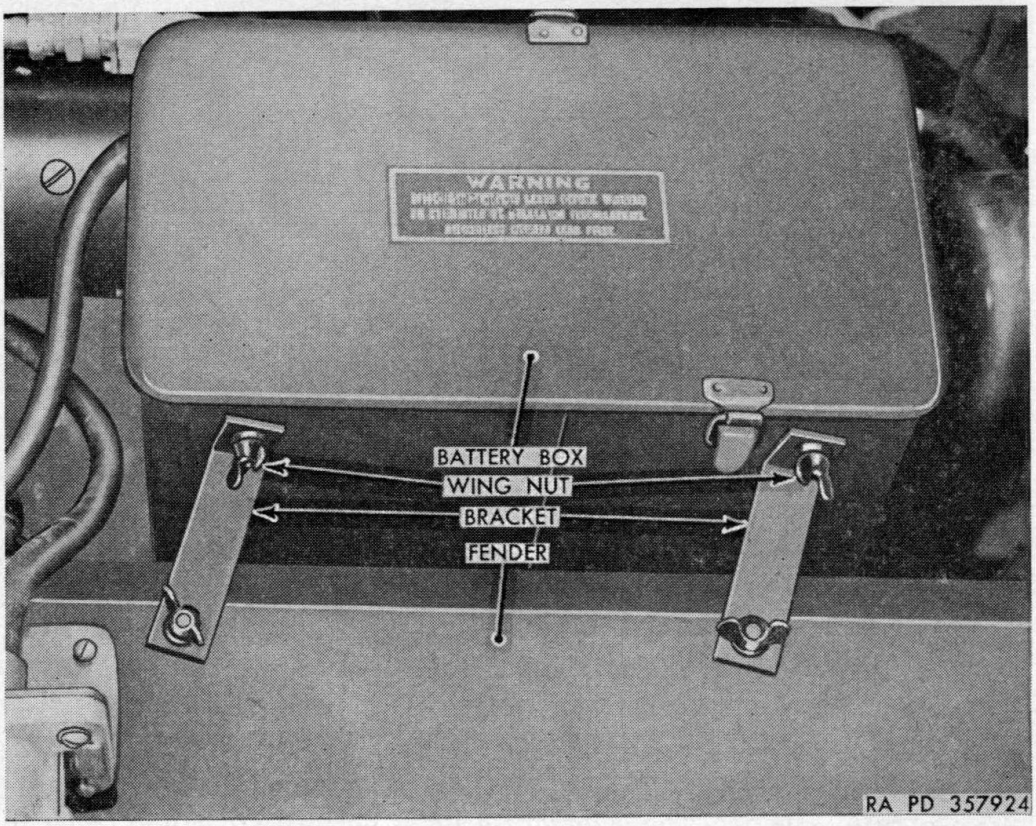

Figure 65. Battery box bracket.

c. Installation.

(1) *Battery "A."* Place battery in battery box. Install two wing nuts securing battery. Install two wing bolts securing battery box bracket to battery box. Install "positive" and "negative" cables to proper terminal posts. Grease terminals and test (*d* below). Grease terminals, test installation (*d* below), and close cover.

(2) *Battery "B."* Place battery in battery box. Install two wing nuts securing battery. Install "positive" and "negative" cables to proper terminal posts. Grease terminals, test (*d* below), and close cover.

d. Testing Battery Installation. Test installation by turning on ignition switch and head lights. If charge indicator needle shows discharge, battery installation is correct. If needle shows charge, reverse battery cables.

196. Headlights

Adjustment of the headlights is readily accomplished with a headlight aiming chart. The headlight beam direction is adjusted by two screws, one at top and one on side. Inflate all tires to recommended pressure. Set vehicle so headlights are 25 feet away from chart and center line of vehicle is in line with center line of chart. To determine center line of vehicle, stand at rear and sight through windshield down across cowl and hood. Turn on headlight upper beam, cover one headlight, and observe location of upper beam on chart. Adjust headlight so that center of bright light area is on intersection of vertical and horizontal lines. Cover headlight just aimed, and adjust other in same manner.

197. Black-Out Driving Light

(Fig. 59)

a. Lamp Unit Removal. Remove three door retaining screws and remove door. Pull sealed beam lamp unit forward, remove connectors, and disconnect cables at connector.

b. Installation. Connect cable at connectors and position connectors in clips. Position sealed beam lamp unit in body. Install door and insert retaining screws.

198. Black-Out Marker Lights

(Fig. 60)

a. Lamp Removal. Remove radiator guard (par. 78). Remove two screws from door. Remove door and waterproof gasket. Push lamp in and turn counterclockwise to remove lamp from socket.

b. Lamp Installation. Insert lamp in socket and turn clockwise to lock. Test lamp by turning on light switch. Install waterproof gasket, cover and tighten two retaining screws. Replace radiator guard.

199. Stop and Tail Lights

(Figs. 61 and 62)

a. Lamp Removal. Remove screws from door. Remove door assembly and waterproof gasket. Push lamp in and turn counterclockwise to remove lamp from socket.

b. Lamp Installation. Insert lamp in socket and turn clockwise to lock. Test lamp by turning on light switch and depressing brake pedal. Install waterproof gasket, cover, and tighten retaining screws.

200. Trailer Connector (Intervehicular Receptacle)
(Fig. 63)

a. Removal. Remove four nuts, lock washers and bolts attaching trailer connector to mounting. Disconnect cables at connectors behind trailer connector. Push trailer connector to rear and remove.

b. Installation. Connect cables at connectors behind trailer connector. Position trailer connector in mounting and secure with bolts, lock washers, and nuts.

201. Slave-Battery Receptacle
(Fig. 63)

a. Removal. Remove four cap screws from receptacle flange. Pull receptacle out and disconnect cables at connectors.

b. Installation. Connect cables to receptacle at connectors. Place receptacle in position, install four cap screws, and secure.

202. Radio Receptacle
(Fig. 64)

a. Removal. Remove right front seat (par. 233*c*). Remove four nuts, lock washers, and bolts securing radio receptacle to mounting bracket. Remove receptacle from bracket and disconnect cables at connectors.

b. Installation. Connect cables to receptacle at connectors. Place receptacle in position. Secure with four bolts, lock washers, and nuts.

Section XXIV. WHEELS AND TIRES

203. Description

a. Wheels. The conventional disk type wheels are attached to hub with five nuts. All wheels are interchangeable.

b. Tires and Rims. Standard military type pneumatic tires are mounted on safety type rims.

204. Wheels

a. Removal. Loosen wheel stud nuts. Jack up wheel to be removed, until tire clears ground. Remove five wheel stud nuts and remove wheel.

b. Installation. Install wheel and tire assembly on hub and install five wheel stud nuts. Tighten wheel stud nuts evenly with wrench provided. Lower jack. Check tightness of wheel stud nuts.

205. Tires and Rims

a. Tire Inflation. Standard tire inflation pressure for highway driving is 28 psi; for cross country driving, 22 psi; for driving in sand, 15 psi. Pressure in all tires must be equal.

Note. Take tire pressure reading when tires are cold; do not reduce tire pressure of overinflated hot tires.

b. Tire Removal. Jack up vehicle and remove wheel (par. 204*a*). Completely deflate tube by removing valve core. Use tire iron to dislodge bead of tire from rim. Remove tire and tube from rim.

c. Tire Installation. Place tube in tire and inflate enough to hold tube in place. Install tire on rim. Inflate to proper tire pressure. Install wheel (par. 204*f*).

Section XXV. WINCH

206. Description and Data

a. Description. The winch is a horizontal drum type unit mounted between the frame side members in front of the radiator guard (fig. 66). It is driven from a power take-off assembly mounted on the rear of the transfer. Two drive shaft assemblies, with a universal joint at each end, and a center hanger bearing mounted to the bell housing direct the power to the winch assembly along the left side of the engine. The power take-off is engaged and disengaged by a shift lever between the front seats. The winch drum can be disengaged by lifting up slightly on a lever on the right side of the winch to permit unreeling the cable.

b. Data.

Make	Ramsey.
Model	50.
Ratio	50–1.
Capacity	3,500 lbs.
Cable capacity	150 ft of 5/16 in

207. Maintenance

Very little attention is required except to see that the winch and drive are properly lubricated (par. 208). Condition of the drive shafts and universal joint should be checked regularly for wear and damage.

208. Lubrication

The power take-off assembly is lubricated by the transfer lubricant. The center hanger bearing has a hydraulic fitting and should be lubricated with chassis grease at each vehicle lubrication. The four drive shaft universal joints are prelubricated and require no attention. The winch housing has separate plugs at each end and require 2–105B

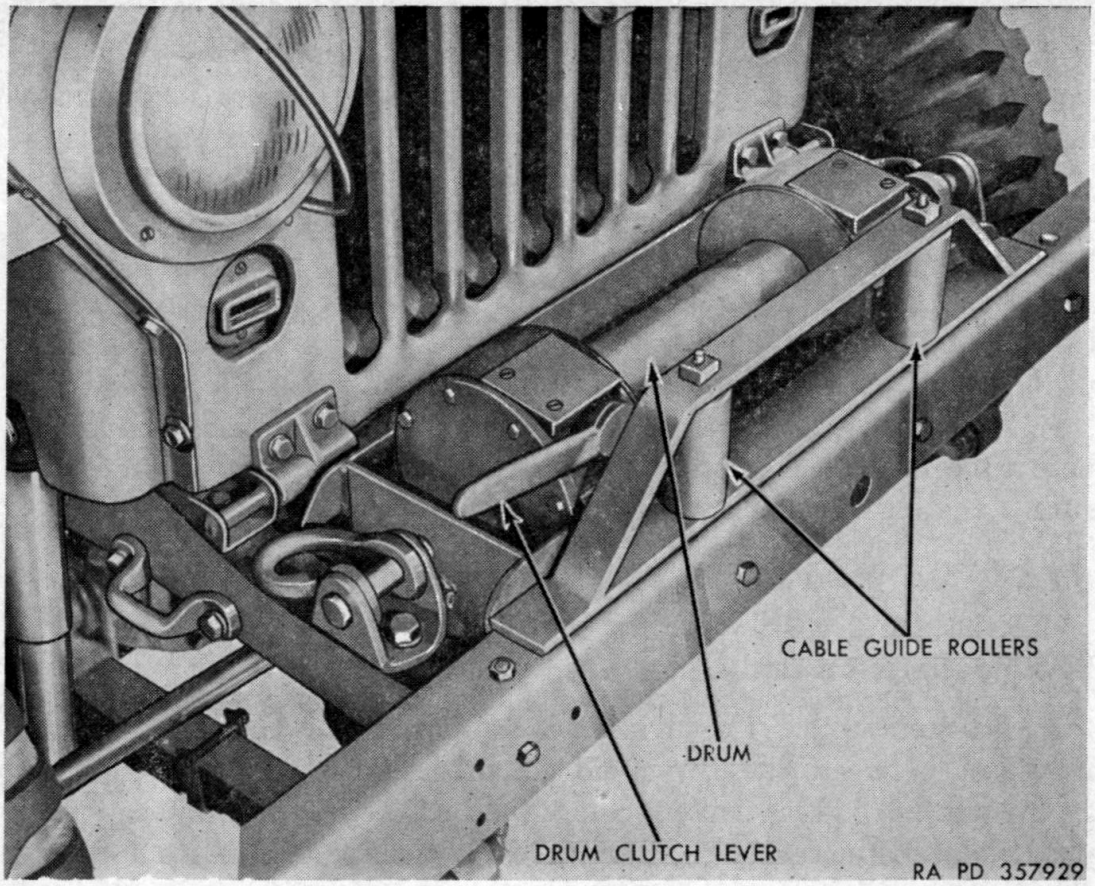

Figure 66. Winch installed.

SAE 90 gear oil to the proper level. The two vertical rollers each have a hydraulic fitting and these should be added to the regular chassis tube points.

209. Operation

The winch may be operated with the vehicle in motion or standing. The power take-off is engaged by pulling back on the short lever between the front seats. The direction of the winch then may be controlled by the transmission lever. Movement of the vehicle is optional with the position of the left transfer shift lever. For reeling out the winch cable, the drum may be "free wheeled" by holding the lever on the right winch housing in an up position. The movement of this lever is very small.

210. Removal and Installation

a. Winch Assembly Removal. Remove the radiator guard assembly (par. 240). Remove forward bolts and loosen the rear bolts of the lifting shackles on each frame side member (fig. 67). Turn the shackle brackets 90° outward. Loosen front drive shaft universal joint set screw and remove the four winch frame mounting bolts (fig. 67). The entire winch assembly then can be lifted up and the universal joint slipped off allowing the assembly to be removed.

b. Power Take-Off Assembly Removal. Remove the shift lever grommet and retainer plate from the floor pan. Remove the four screws from the shift lever tower and lift out the shift lever. Loosen the rear universal joint set screw. Remove five screws holding the power take-off to the transfer and pull the unit back to clear the transfer and disengage the universal joint.

c. Drive Shaft Removal (fig. 67). Loosen the universal set screws from the universal joints of drive shaft or shafts to be removed. Remove the two screws holding the hanger bearing to the bell housing and hanger bearing brace. The hanger bearing then can be dropped down permitting the disengagement of the loosened universal joints.

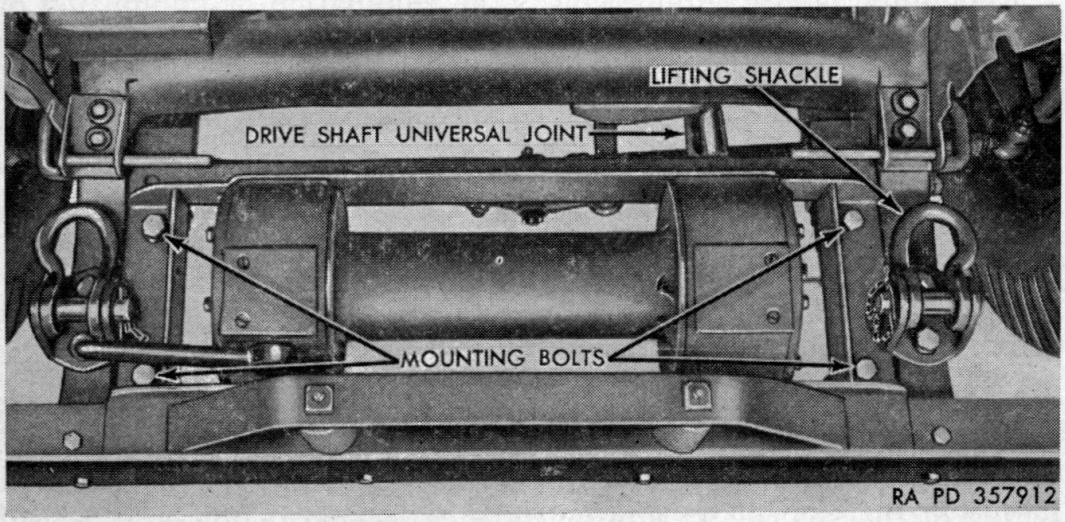

Figure 67. Winch mounting.

d. Winch Assembly Installation. Place the winch assembly onto the support brackets on the frame engaging the universal joint on the shaft by lining up the shaft key. Fasten the winch frame down with the four mounting screws (fig. 67). The two lifting shackles should be turned 90° forward and the two forward bolts replaced. Tighten all four shackle bolts securely. Tighten the universal joint set screw.

e. Power Take-Off Installation. Place the power take-off assembly in position on transfer, using a new gasket and engage the universal joint and keyway. Install the five mounting screws to transfer and tighten the universal joint set screw. Replace the shift lever on the tower and fasten with four screws. Install the grommet and retainer plate on the floor pan with four screws.

f. Drive Shaft Installation. Assemble the rear or short drive shaft universal joint to the power take-off shaft, lining up the key and keyway, and tighten the set screw. Assemble the front or long

drive shaft universal joint to the winch shaft, lining up the key and keyway, and tighten the set screw.

Note. The slip joint of this long shaft should be to the rear.

Bring the hangar bearing up to position as the universal joints of the front and rear drive shafts are slipped on the bearing shaft. Install the two screws holding the hangar bearing to the bell housing and brace. Tighten the universal joint set screws at each end of the bearing shaft.

Section XXVI. RADIO INTERFERENCE SUPPRESSION

211. Purpose

Radio-interference suppression is the elimination or minimizing of electrical disturbances which interfere with radio reception, or disclose the location of the vehicle to sensitive electrical detectors. It is equally important that nonradio mounted vehicles be properly suppressed, so as to prevent interference with radio reception of surrounding vehicles, or disclosing their location.

212. Description

For the most part suppression of this vehicle is accomplished primarily by metallic shielding of the more offending components, such as: distributor, high tension ignition wires, spark plugs, generator and voltage regulator. To eliminate radiation from the nonshielded wiring of the vehicle, an ignition filter is located in the ignition coil primary circuit and mounted on the fire wall, above the starter. For this same purpose there is also located a filter in the base of the voltage regulator.

Note.—It is important that all electrical components be kept securely mounted in order to effect good contact for proper functioning. Report radio noise or interference to ordnance supporting unit.

Section XXVII. WIRING, CIRCUITS, AND HARNESSES

213. Description

a. Circuits. The components of the electrical system, including wiring and connections are completely waterproofed. The complete electrical system (fig. 68) is made up of several systems, to include: ignition system; starting and charging system; battery and lighting system, including slave-battery, radio receptacles, and trailer connections; instrument panel gages, circuit breakers, switches, and horn.

Refer to figures 34, 36, 57, 63, and 69 for wiring diagrams and circuit numbers. Some cables in engine compartment are enclosed by a metallic shield to prevent radiation of electrical interference to radio equipment as well as to prevent entrance of water.

b. Wiring and Harnesses. The electrical cables are rubber covered and the ends terminate in a connector-receptacle pin or socket. There are two types of connectors—one is a receptacle-and-plug type, enclosed and locked together to form a watertight connection; the other is a bell type, with two bells enclosing an insulated connector and holding rubber bushings in place to form a waterproof joint. Three main wiring harnesses are used on this vehicle; front light switch assembly, rear light switch assembly and generator regulator.

214. Circuits

The electrical circuits can be traced from the information given in figure 68. To establish continuity of any circuit, trace with a test light, buzzer equipment, or low reading ohmmeter.

215. Wiring and Harness

a. Location. The generator-regulator wiring harness extends from the regulator to ammeter, temperature gage, starter and circuit breakers (circuit numbers 9–8–10–4). The frontlight switch harness extends from light switch assembly to service headlights, black-out lights, instrument cluster, dimmer switch, horn and circuit breakers (circuit numbers 15, 16, 17, 19, 20, 40 and 75). The rear light switch harness extends from light switch assembly to tail lights and trailer connection (circuit numbers 21, 22, 23 and 24).

b. Identification. All cables are marked with cable circuit numbers, corresponding to the circuit numbers shown in figures 34, 36, 57, 63, and 69.

c. Removal. All electrical cables are removed in essentially the same manner. Disconnect the cable (single or multiple) at both ends. Remove clamps and remove cable. It is necessary only to unscrew the connector coupling nut on the two-piece connectors, and remove plug and cable.

d. Installation. Position cable and install retaining clamps. Install connector plugs and tighten connector nuts.

Note. When installing connector plugs, make sure that the positioning tongue lines up with the groove. Do not force plugs; if plug is properly positioned, it will enter receptacle without having to be forced. Rubber grommets and bushings must be in proper position before attempting to assemble two halves of bell connectors. If they are not in correct position, it will be almost impossible to assemble the two halves of connector, or to obtain proper connections.

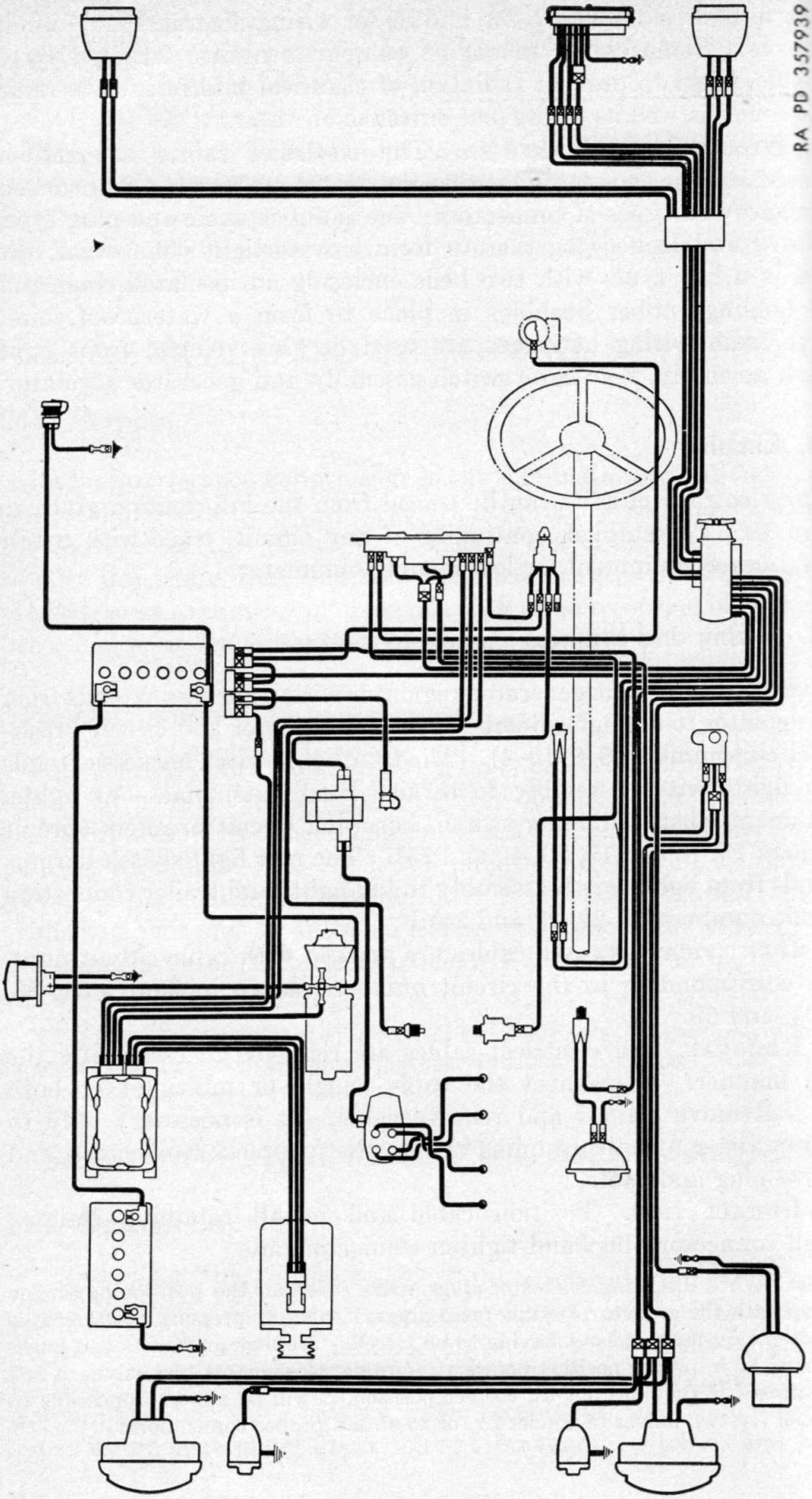

RA PD 357939

Figure 68. Complete wiring diagram.

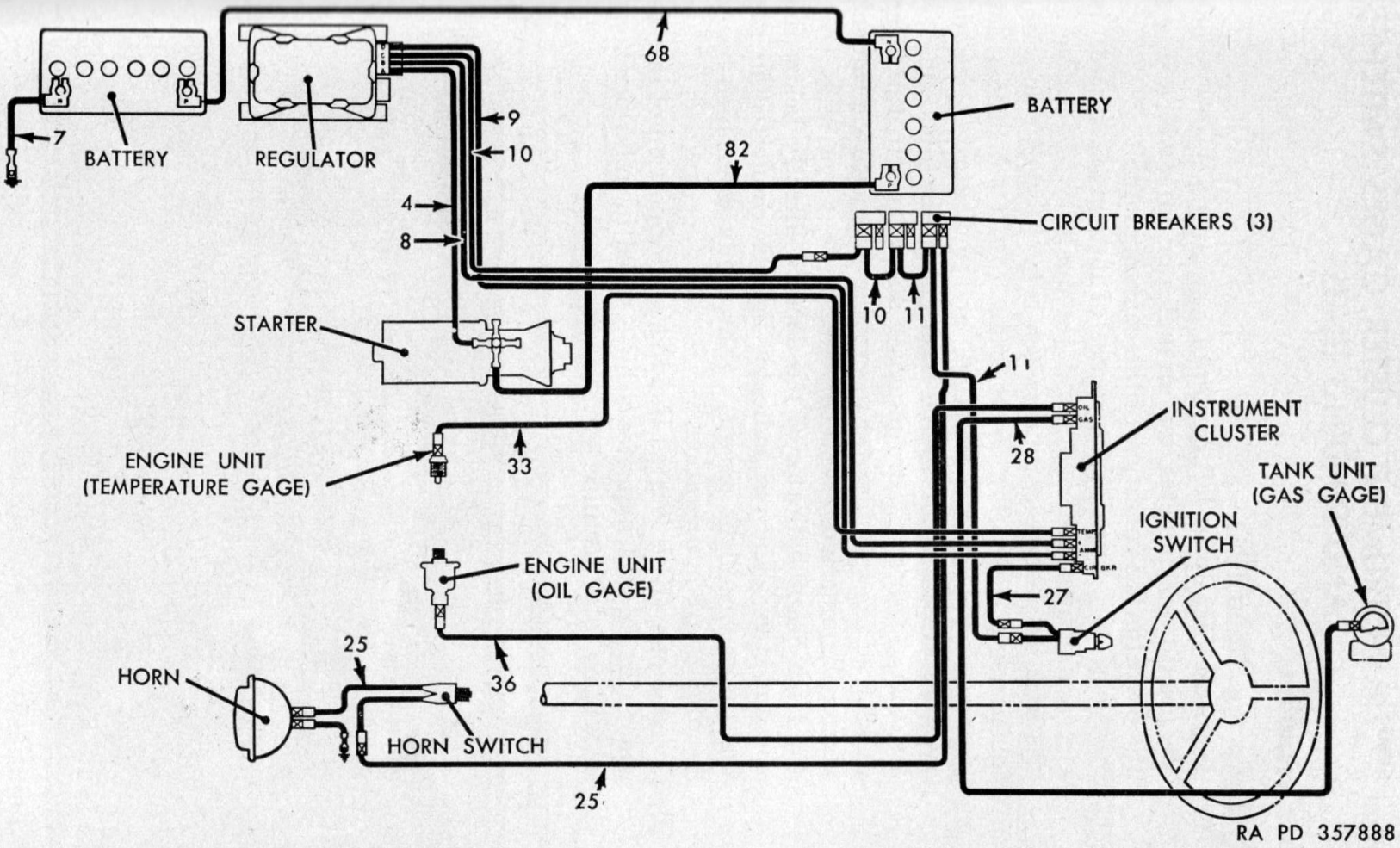

Figure 69. Gas, oil, and temperature gage and horn circuits.

Section XXVIII. INSTRUMENT CLUSTER, GAGES, SWITCHES, AND SENDING UNITS

216. Description

a. GAGES (figs. 70 and 71).

(1) Ammeter (A), upper left corner of instrument cluster, is not the usual type ammeter, but an indicator only, which shows the operator the condition of the charging circuit.

(2) Fuel gage (C), upper right corner of instrument cluster, is electrically operated, and shows the quantity of gasoline in the tank only when ignition switch is in the "ON" position.

(3) Oil pressure gage (D), lower right corner of instrument cluster, is electrically operated, and indicates engine oil pressure when ignition switch is on and engine operating.

(4) Two panel lights (E) are mounted below and to the right and left of the speedometer to provide adequate instrument cluster illumination.

(5) High-beam indicator (F) is located directly below the speedometer. The red indicator light is connected in the high-beam headlight circuit, lighting only when high-beam headlights are in operation.

(6) Speedometer (B) is located in upper center portion of instrument cluster, and indicates vehicle speed in miles per hour as well as total distance.

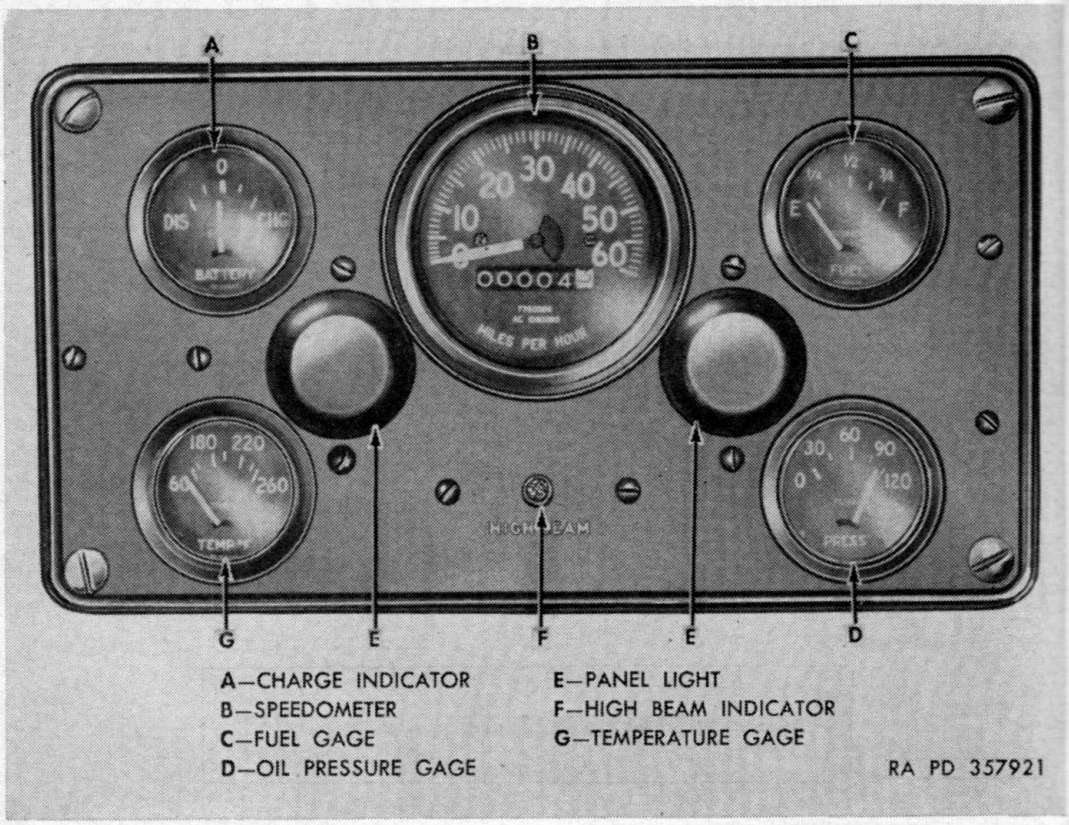

Figure 70. Instrument cluster—front view.

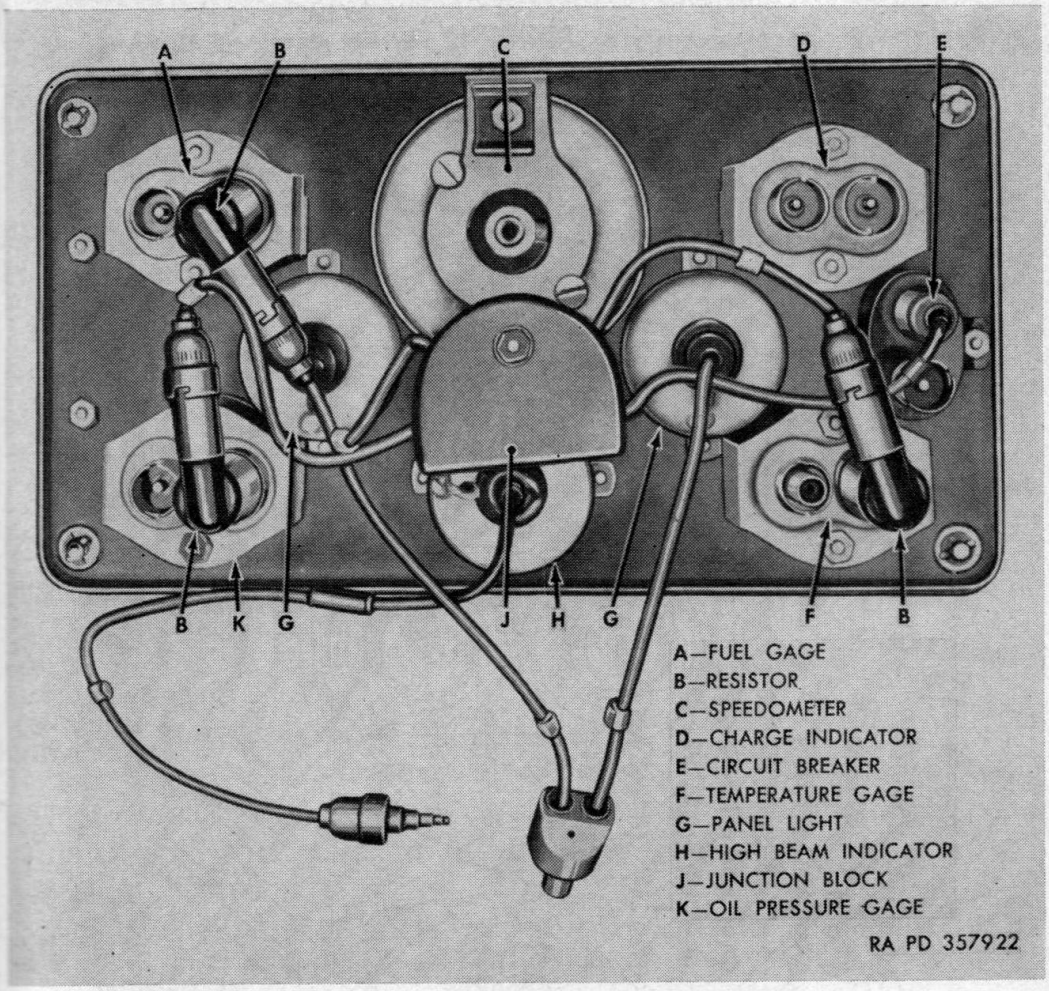

Figure 71. Instrument cluster—rear view.

(7) Temperature gage (G), lower left corner of instrument cluster, is electrically operated and indicates temperature of coolant, when ignition switch is on.

b. Ignition Switch. Ignition switch is mounted on instrument panel on the left side, near the crankcase vent control. Lever must be turned to "ON" position before engine can be started.

c. Light Switch (fig. 72).

(1) Light switch (A) is mounted to the left of the steering column on the instrument panel. Three interlocking lever switches control all light circuits.

(2) Main switch (B) has five positions. It can be moved at will from off to black-out marker or black-out drive. To move main switch to stop-light or service-drive position, the mechanical switch must be turned to left and held while main switch is moved.

(3) Auxiliary switch (C) can be moved to off, dim, or bright panel lights at will, but can be moved to parking or headlight positions only when main switch is in stop-light or service-drive positions.

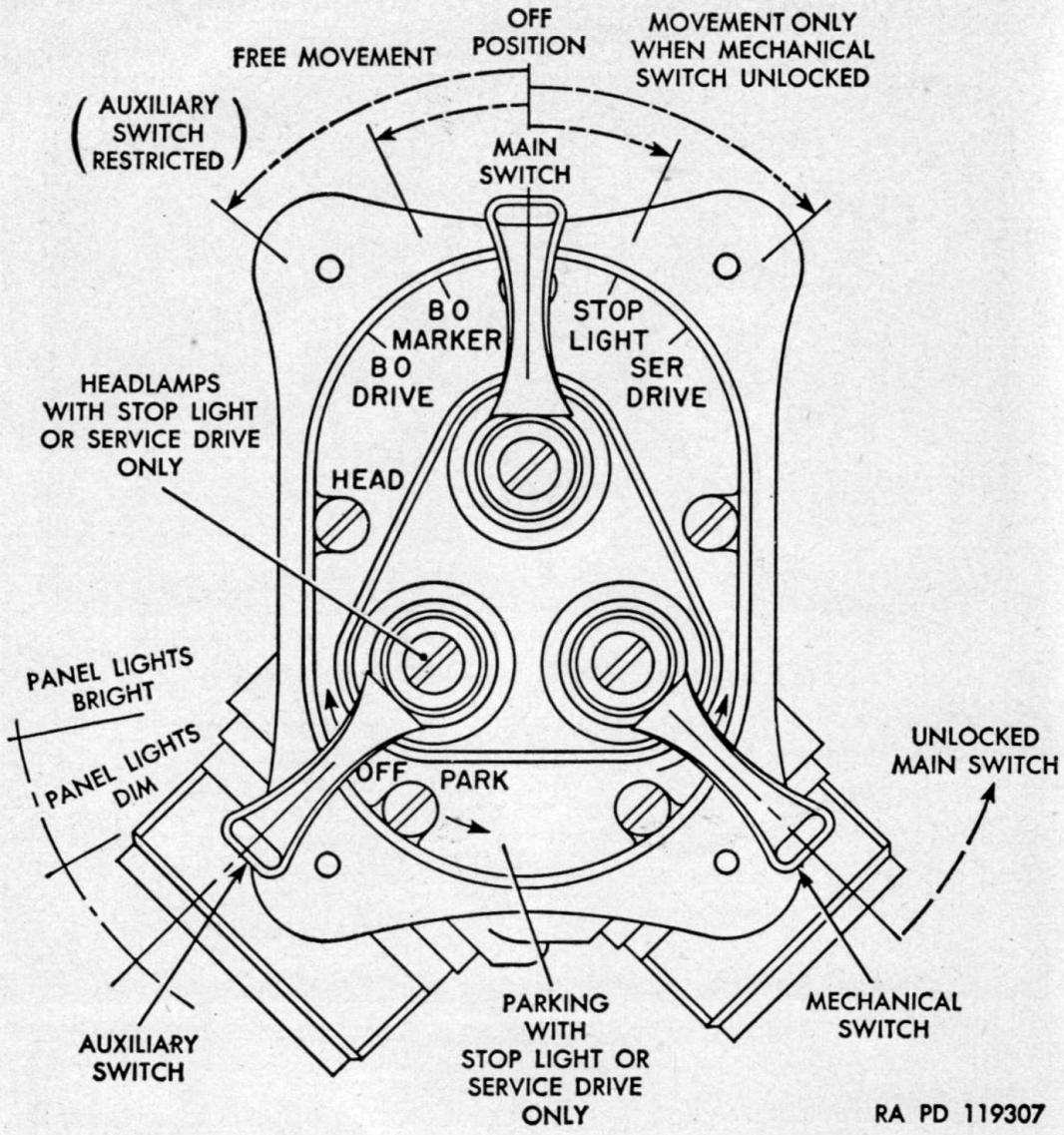

Figure 72. Light switch.

d. Horn and Button. An electric vibrating-type horn (fig. 18) is mounted on the left fender splasher and is operated by battery current from a horn button mounted in the center of the steering wheel (fig. 5).

e. Dimmer Switch. Dimmer switch is located to the left and above the clutch pedal. Control is by foot and is operated only for the purpose of adjusting high and low beams of headlights.

f. Stop-Light Switch. Stop-light switch is of the diaphragm type and is located at the front end of the brake master cylinder (fig. 47).

g. Sending Units.

(1) Speedometer sending unit is a mechanical unit mounted on transmission and connected to speedometer in instrument cluster by flexible shaft.

(2) Fuel-gage sending unit is electrically operated and mounted on top of fuel tank and connected to fuel gage in instrument cluster.

(3) Temperature-gage sending unit is mounted on right side of cylinder head. Unit is electrically connected to temperature gage in instrument cluster.
(4) Oil-pressure-gage sending unit is mounted on left side of engine. The unit is electrically connected to oil pressure-gage in instrument cluster.

217. Instrument Cluster

a. REMOVAL. Instrument cluster (fig. 70) is held in position in instrument panel by four panel lock screws located in each corner. Release these screws by turning counterclockwise one-half turn and pull instrument cluster out of instrument panel.

b. INSTALLATION. Raise instrument cluster and place in position in panel. Engage four panel lock screws and tighten.

218. Ammeter
(fig. 71)

a. REMOVAL.
(1) Remove instrument cluster (par. 217*a*).
(2) Disconnect two electrical connectors from ammeter.
(3) Remove two nuts and lock washers at back of ammeter and remove ammeter from front of instrument cluster.

b. INSTALLATION.
(1) Place ammeter in cluster panel from front. Enter mounting studs in bracket and install nuts and lock washers.
(2) Make two electrical connections.
(3) Install instrument cluster (par. 217*b*).

219. Fuel Gage
(fig. 71)

a. REMOVAL. Fuel gage removal is same as for ammeter (par. 218).

b. INSTALLATION. Installation of fuel gage is same as for ammeter (par. 218).

220. Temperature-Gage
(fig. 71)

a. REMOVAL. Temperature-gage removal is same as for ammeter (par. 218).

b. INSTALLATION. Installation of temperature-gage is same as for ammeter (par. 218).

221. Oil-Pressure Gage
(fig. 71)

a. REMOVAL. Oil-pressure removal is same as for ammeter (par. 218).

b. INSTALLATION. Installation of oil-pressure gage is same as for ammeter (par. 218).

222. Speedometer

(Fig. 71)

a. REMOVAL.

(1) Remove instrument cluster (par. 217*a*).

(2) Disconnect flexible shaft from speedometer.

(3) Remove two mounting nuts and lock washers, and remove speedometer from front of instrument cluster.

b. INSTALLATION.

(1) Place speedometer in position and install mounting nuts and lock washers.

(2) Connect flexible shaft.

Note. When connecting flexible shaft, be sure there is sufficient slack in the shaft between the cluster and the place where the shaft goes through the toe board in order to prevent subsequent snapping and breakage.

(3) Install instrument cluster (par. 217*b*).

c. FLEXIBLE-SHAFT REMOVAL. Disconnect flexible shaft from sending unit on transmission, and from speedometer. Disconnect clip and remove flexible shaft assembly.

223. Panel Light

(Fig. 71).

a. REMOVAL.

(1) Remove instrument cluster from instrument panel (par. 217*a*)

(2) Disconnect electrical connection from back of light.

(3) Remove two screws from front of cluster and remove light from back.

b. INSTALLATION.

(1) Insert panel light from back of cluster and fasten with two screws inserted from front.

(2) Install electrical connection on back of cluster light.

(3) Install instrument cluster in instrument panel.

c. LAMP REPLACEMENT.

(1) Remove panel light (*a* above).

(2) Press body and cover assembly together, turn body counterclockwise and separate assembly.

(3) Press on lamp and remove from bayonet socket.

(4) Install replacement lamp, install cover on body, and turn to engage retaining pins in cover slots.

(5) Install light assembly in cluster from back, and secure with two screws inserted in front.

(6) Connect cable connector and place connector in clip at side of cluster.

224. Ignition Switch

a. Removal.

(1) Disconnect battery ground cable.
(2) Remove connectors from back of switch.
(3) Remove screw from center of switch lever and remove lever.
(4) Remove nut and washer holding switch to instrument panel and remove switch from rear of panel.
(5) Disconnect cable connectors.

b. Installation.

(1) Place ignition switch in position in instrument panel and install nut and washer on front of panel.
(2) Connect cable connectors.
(3) Install switch lever and screw.
(4) Connect battery ground cable.

225. Light Switch

(Fig. 72)

a. Testing. Test light switch by setting control levers in all positions and checking lamps. Refer to figure 72 for combination of settings.

b. Removal.

(1) Remove connector plugs and cables on back of light switch.
(2) Remove four screws holding switch to instrument panel and remove switch through opening.

c. Installation.

(1) Place switch in instrument cluster from front, with receptacles down, and install screws.
(2) Install connector plugs and cables to receptacles.

226. Horn Button

(Fig. 5)

a. Removal. Remove steering wheel nut and lift horn button out.

b. Installation. Place horn button in horn wire contact support. Install steering wheel nut. Sound horn to test.

227. Dimmer Switch

a. Removal.

(1) Remove two mounting screws from toeboard and remove switch from below.
(2) Disconnect two cable connections.

b. Installation.

(1) Make two cable connections.
(2) Place dimmer switch in position in toeboard and install two screws.

c. Testing. With headlights turned on, operate dimmer switch.

228. Stop-Light Switch
(Fig. 47)

a. REMOVAL. Disconnect two terminal connectors and remove switch from end of master brake cylinder.

b. INSTALLATION. Install switch in end of master brake cylinder. Make two terminal connections.

c. TESTING. With light switch set to stop light, depress brake pedal and check stop lights.

Note. If brakes do not operate properly, bleed hydraulic system (par. 181*a*).

229. Sending Units

a. REMOVAL.

(1) Temperature and oil-pressure-gage sending units have pipe-thread connections. Disconnect terminal connector and unscrew unit from mounting.

(2) Fuel gage sending unit is mounted on fuel tank. Remove mounting screws and lift sending unit and connected assembly from tank.

(3) Speedometer sending unit is mounted on transmission with a union nut. Loosen nut and remove unit.

b. INSTALLATION.

(1) Temperature and oil pressure gage sending units have similar installations. Screw pipe thread connectors into mountings and connect terminals.

(2) Install fuel-gage sending unit on top of fuel tank. Place a new gasket on tank, insert float and operating mechanism through opening and secure flange of sending unit to tank.

Section XXIX. BODY AND FRAME

230. Description and Data

a. DESCRIPTION. The body (figs. 1 to 3) is of the open type, identified by a name plate located on the instrument panel (fig. 4). There are two individual tubular frame front seats and a rear seat. The right front seat can be raised forward for access to the tool box. The rear seat can be raised to reach the tire pump. The windshield is equipped with dual, vacuum and hand-operated wipers, and can be folded down on top of the hood. A fire extinguisher and an adjustable rear vision mirror are mounted on the left side of the cowl. A rifle holder is mounted on the lower panel of the windshield over the instrument panel. A strap and sheath carry a shovel and ax on the right side of the body. Hand grips on the side of the body facilitate lifting. The fuel tank sets on the floor underneath the driver's seat and the tank is filled from inlet pipe on left side of body above the left-hand grip. A fuel can rack, trailer connection and spare tire

and wheel are mounted on the body rear panel, which is hinged to provide a rear tail-gate. Bumpers at the front and rear and a radiator and head lamp guard provide protection against damage. A pintle hook at the rear provides a means of hauling a trailed load. Straps are provided in the rear compartment for securing the top and side curtains on the rear wheel housing. When the windshield is in an upright position, ventilation is provided by a hinged ventilator mounted at the center of the panel directly under the windshield.

b. DATA.

Body type	Open.
Driver's position	Left side.
Windshield type	Folding.
Cross members	5.
Chassis frame type	Box.

231. Maintenance

General maintenance of the body requires periodic tightening of all loose parts, and lubrication of wearing parts. Keep the body clean and touch up bare spots to prevent rust. Water in the body can be drained by removing drain plugs in the floor at the side of the cowl. Chassis maintenance concerns primarily, proper lubrication of connecting parts (par. 36).

232. Instruments

Removal of the entire instrument clutch must be made to make replacement or repair of any one instrument.

a. REMOVAL. Remove battery ground cable at battery post, as a safety precaution. Remove four panel lock screws securing panel and remove instrument cluster. Remove connecting cables.

b. INSTALLATION. Attach instrument cables, and battery ground cable. Install instument panel in dashboard. Lighten four panel lock screws.

233. Seats and Cushions

a. REMOVAL OF SEAT CUSHIONS AND BACKS. Bemove screws holding front seat cushion to seat frame, underneath seat, and remove cushion. Remove screws holding seat back to frame, and remove seat back. Remove screws holding front edge of rear seat cushion to frame, also screws holding rear edge and remove cushion. Remove screws in top edge of back seat and in lower edge, and remove seat back.

b. INSTALLATION OF SEAT CUSHIONS AND BACKS. Place rear seat back in position, and install lower screws. Pull edge of seat back up in place, and install screws in top side. Place rear seat cushion in

position, top side down. Install screws, and turn cushion over into place. Place front seat back in position, and install screws. Place seat cushions in position and install screws.

c. Removal of Front Seats. Remove three bolts holding driver's seat in place and remove left seat. Remove bolts holding right front seat to floor, and remove seat.

d. Installation of Front Seats. Place seats in position and install bolts.

e. Removal of Rear Seat. Pull up front edge of seat to fold seat. Remove two bolts securing hold-down clip in place. Raise end of seat and lift out.

f. Installation of Rear Seat. Place seat in position in brackets. Install hold-down clips.

234. Windshield

a. Removal. Unhook windshield clamps on instrument panel (fig. 5). Disconnect vacuum lines. Remove bolts at side of cowl, and lift off windshield.

b. Installation. Place windshield in position, and install bolts at side of cowl. Install the vacuum lines. Clamp windshield to instrument panel.

235. Windshield Wiper

a. Removal. Disconnect vacuum lines. Remove windshield wiper blade. Remove nuts holding wiper handle, and remove handles. Remove nuts holding windshield wiper motor, and remove motor.

b. Installation. Install windshield wiper motor. Connect windshield wiper vacuum lines. Install blades and arms in place. Install windshield wiper handles.

236. Top Curtains and Doors

Note. No illustrations have been provided in this manual as to the proper method of folding and storage of the side curtains and doors. Extreme caution must be taken to prevent unnecessary damage to the vinalyte portion of the curtains and doors. Fold all metal parts into canvas, being sure no metal rods touch the windows.

a. Installation. Loosen the two wing screws at the pivot brackets (figs. 1 and 2). Slide tubular bows back out of front bracket. Install front ends in rear brackets, and tighten winged screws. Allow front bow to drop down over seats. Remove top from carrier over right wheel housing. Attach left leading edge of top into slotted recess on top of windshield, working from right to left. Stretch top over bow and down to body back panel. Place the six straps in metal loops, and attach to body panel; stretch top, and buckle straps. Raise front bow into position at bow flaps, and snap flaps around bow. The rear

curtains are installed by fastening the four snap fasteners at the top and three straps at the body. Install the front doors by inserting the lower portion of the leading edge of the door into the slotted recess provided on the frame. Secure the remaining fasteners.

b. REMOVAL. Remove front doors by releasing snap fasteners and lifting doors from slotted recess. Remove rear curtains by releasing snap fasteners and buckles. Fold curtains and doors and stow over left rear wheel housing. Unsnap bow flaps, and lower front bow on front seat. Unbuckle top straps at body rear panel. Slide top from left to right and remove. Fold top and stow over right rear wheel housing. Loosen wing screws in top rear brackets. Fold front bow against rear bow. Raise bows out of rear brackets, and insert lower ends in front brackets. Tighten rear bracket screws.

237. Rifle Holder

a. REMOVAL. Swing the rifle bumper to the right, at the right end of holder, and remove rifle. Remove two bolts holding rifle holder to windshield lower panel, and remove holder.

b. INSTALL. Place rifle holder in position on windshield panel with butt end to the left, insert bolts, and tighten securely. Swing rifle bumper to the right. With barrel up, insert butt end of rifle in holder at left. Push rifle up against spring pressure, and turn bumper to left under rifle.

238. Shovel and Ax

(Fig. 2)

a. REMOVAL. Release straps and remove shovel or ax individually.

b. INSTALLATION. Turn bit, or blade, of ax up. Insert handle in front clamp. Insert blade in sheath. Pull up clamp under ax head, and strap in place. Turn face of shovel against cowl and place in strap on cowl side. Wrap fabric strap, through handle, over grip, between grip and side of body, through loop, over outside of grip, and buckle.

Note. This will hold the shovel forward in the strap on the cowl side.

239. Hood

(Figs. 1 and 18)

a. REMOVAL. Unhook hood and raise against windshield. Remove screws in hinge at cowl, and remove hood.

b. INSTALLATION. Place hood in position and install hinge screws in cowl, but do not tighten. Lower hood for alinement. Raise hood and tighten screws. Lower hood and hook down both sides.

240. Radiator Guard

(Fig. 19)

a. Removal. Disconnect the three headlight bayonet type connectors at the left front headlight. Loosen three bolts on each side of radiator guard panel. Lay the radiator guard assembly forward on the bumper and remove from hinged sockets.

b. Installation. Place radiator guard on front bumper and slide into hinge sockets. Raise radiator guard to proper position and tighten the top bolt on each side of radiator guard panel. Tighten the remaining two bolts on each side of radiator grill and connect the quick disconnect connectors at left headlight.

241. Fenders

Note. If both the right and left front fenders are to be removed at the same time, start the operation by removing radiator guard as set forth in paragraph 240. If only one of the fenders is to be removed, proceed as outlined in *a* and *c* below.

a. Removal of Right Front Fender. Raise hood. Remove three bolts securing right fender to the radiator guard (fig. 19). Remove two wing screws securing battery box hold-down bracket to fender (fig. 65). Remove four nuts, bolts and flat washers securing "slave kit" female plug and clip to fender (fig. 63). Remove screw securing battery positive cable clip on fender panel (fig. 65). Remove two bolts securing fender to frame support. Remove four bolts securing fender skirt to frame. Remove fender.

b. Installation of Right Front Fender. Place fender on chassis. Install one fender to frame support bolt. Install one fender skirt to frame bolt. Install one fender to radiator guard bolt. Install other fender bolts and tighten all. Install battery positive cable clip. Install "slave kit" female plug. Install wing screws on battery box hold-down bracket. Lower hood and lock.

c. Removal of Left Front Fender. Raise hood. Disconnect the quick-disconnect type connectors on left side of fender. Disconnect black-out driving light and remove hold-down clips on fender. Disconnect horn wires. Lay all loose wires on top of block. Remove screw securing fuel line to fender splasher. Remove three bolts securing left fender to radiator guard. Remove two bolts securing fender to frame support. Remove four bolts securing fender skirt to frame. Remove fender.

d. Installation of Left Front Fender. Place fender on chassis. Install one fender to frame support bolt. Install one fender skirt to frame bolt. Install one fender to radiator guard bolt. Install other fender bolts and tighten all. Install horn wires. Install headlight wires. Install black-out driving light wires and hold-down clips. Install fuel line hold-down clip on fender splasher. Check operation of all lights and horn. Lower hood and lock down.

Section XXX. MAINTENANCE UNDER UNUSUAL CONDITIONS

242. Extreme Cold Weather Maintenance Problems

a. The importance of maintenance must be impressed on all concerned, with special emphasis on organizational (preventive) maintenance. Maintenance of mechanical equipment in extreme cold is exceptionally difficult in the field. Even shop maintenance cannot be completed with normal speed, because the equipment must be allowed to thaw out and warm up before the mechanic can make satisfactory repairs. In the field, maintenance must be undertaken under the most difficult of conditions. Bare hands stick to cold metal. Fuel in contact with the hands results in supercooling due to evaporation, and the hands can be painfully frozen in the matter of minutes. Engine oils, except subzero grade, are unpourable at temperatures below −40° F. Ordinary greases become as solid as cold butter.

b. These difficulties increase the time required to perform maintenance. At temperatures below −40° F., maintenance requires up to five times the normal amount of time. The time required to warm up a vehicle so that it is operable at temperatures as low as −50° F. may approach two hours. Vehicles in poor mechanical condition probably will not start at all, or only after many hours of laborious maintenance and heating. Complete winterization, diligent maintenance, and well-trained crews are the key to efficient Arctic-winter operations.

243. Initial Preparations for Extreme Cold Weather Operations

a. General.

(1) Extreme cold weather operations are considered to be those involving ambient temperatures of 32° to −65° F., although it is unlikely that winterization kits will be installed until it is definitely known that the vehicle must operate in areas of continuous 0° F. or lower temperatures.

(2) For usual cold weather operation, where the temperature falls a few degrees below freezing for only short periods, only ordinary preparations such as engine oil change to lighter grade, the addition of antifreeze to coolant, and radiator coverage need be made. For anticipated continuous ambient temperatures as low as −20° F., the personnel heater kit and hard top closure will be installed. Operations will not be attempted in areas where temperatures from −20° F. to −65° F. are likely without the advantages of the Arctic winterization kit. Winterization kits are described in paragraph 28*b*.

(3) At time of installing the winterization kit, make a thorough inspection of all parts of the item for security of all fastenings and general fitness of the vehicle for service under extreme

cold conditions. Operation over hard, frozen ground causes strains which will result in more frequent breakage of screws and components, and the development of cracks, as shock resistance of materials is greatly reduced at extremely low temperatures.

(4) Thorough cleaning, preservative coating and touch-up painting will be accomplished. Complete lubrication and change of lubricants will be made as directed in the lubrication order and in TM 9–2835 for the minimum temperature anticipated. Clean oil filter and install new filter element.

b. ENGINE. The engine should be thoroughly cleaned, and all sealed units inspected for tightness of covers. Drain air cleaner and refill with proper grade of oil. In extreme cold weather, the spark plug gap may be reduced by 0.005 inch to facilitate cold starting. Turn manifold heat control to winter position.

c. POWER TRAIN. Clean all components of lubricants and fluids and lubricate for extreme cold weather in accordance with TM 9–2835.

d. WHEELS AND TIRES. Replace wheel bearings as specified in TM 9–2835. Check tire pressure. Reduce pressure slightly when operating over packed snow.

e. ELECTRICAL SYSTEM (par. 246).

(1) *Batteries.* The storage battery will be tested for its state of charge. The battery must be fully charged, indicated by a hydrometer reading between 1.275 and 1.270, temperature corrected (refer to par. 245), and must be warmed preferably above 40° F. in order to deliver sufficient current at a suitable potential for starting. To absorb an adequate charge, the battery temperature must approximate 35° F. The battery can be heated, if no winterization equipment is installed on the vehicle, by removing the battery and placing it in a heated room or directing hot air to it from a portable heater or from the heater on the engine starting aid kit (slave kit). The batteries or generator on the slave kit can be used, if necessary, to supply the electrical energy to the starter. Never add water to a cold battery. Add it when the battery is warm, about 40° F., and charging. Check the battery terminal connections for cleanliness and good contact. Check the ground connections and strap.

(2) *Starter.* Check connections to the starter. They must be clean and tight to assure a good electrical contact. The starter drive mechanism must operate freely.

(3) *Distributor.*

(*a*) Inspect the distributor breaker contact points. If the color of the contact surface of the points is blue, denoting oxidation, replace the points. Make certain breaker arm does not bind on its pivot.

(*b*) Make certain that distributor cap (internally and externally), rotor and breaker plate assembly, and ignition coil are free of ice or moisture. Distributor must be dry. If necessary, apply heat to dry any moisture before attempting to start engine. Heat can be conducted to the distributor by means of the 20-foot section of flexible 3-inch tubing attached to the heater on the slave kit.

(4) *Spark plugs.* The spark plugs MUST be thoroughly dry. Presence of ice or moisture on the plugs will prevent starting. It may be necessary to remove plugs and heat them to dry moisture on the inside of shell, insulator and insulated electrode.

Caution: Insulators of spark plugs are easily broken in extreme cold. Handle them carefully.

(5) *Cables.* Remove any ice or moisture that may be present on the high tension cables connected to the spark plugs and from cable connecting the ignition coil to distributor cap.

f. Cooling System. Before adding antifreeze compound it is necessary that the cooling system of the vehicle be clean. (Refer to TM 9–2858 for cleaning instructions.) If the cooling system has been cleaned and inhibited recently, it may be necessary only to drain, refill with clean water, and drain again. Inspect all connections and pet cocks and make them watertight. If there is evidence of exhaust gas or air leakage into the system, necessary correction must be made. Inspect thermostat (par. 133) to see that it functions satisfactorily. Look for evidence of sticking in open or closed position. If thermostat does not open or close completely and function properly, or is badly rusted, it should be replaced. Tighten cylinder head nuts (par. 65) to prevent leakage of coolant. The cylinder head bolts should also be checked once a month during the winter season to determine that no seepage of coolant is taking place. Inspect water pump shaft packing frequently.

g. Fuel System.

(1) Drain fuel tank sump. Clean and replace filter. Add one cup of denatured alcohol, grade III, to the fuel tank at time of filling.

(2) Remove, clean with volatile mineral-spirits paint thinner, and reinstall air cleaner. Refill oil-bath type cleaner with oil as specified in TM 9–2835.

(3) Check for any indication of fuel leaks. Trace all leaks to their source and correct or replace parts as necessary.

244. Cooling System Maintenance in Extreme-Cold Weather

a. Reverse Flushing the Cooling System. To prevent an excessive accumulation of rust and scale, it is advisable to flush the

cooling system twice a year, preferably before and after using antifreeze. (Refer to TM 9–850 and TM 9–2858.)

b. ANTIFREEZE SOLUTIONS.

(1) *Types.*

(*a*) *Ethylene-glycol antifreeze compound.*

1. *Mixing solution.* A solution of 44 percent ethylene-glycol compound and 56 percent water is the coolant prescribed for operations in cold weather (32° to −20° F.). A solution mixed in maximum proportions of 60 percent ethylene-glycol antifreeze compound and 40 percent water is safe for operations in temperatures as low as −62° F. Undiluted ethylene glycol is carried in 1-gallon cans, and when not mixed with water will become slushy and unpourable at 20° F. Water, ethylene-glycol compound, and corrosion inhibitor may be added as required upon reclamation of solution, providing the resultant solution gives satisfactory specific gravity reading for the temperature prevailing.

2. *Sudden temperature rises.* Ethylene-glycol antifreeze compound has the advantage of possessing a higher point of distillation than alcohol and may be operated at higher temperatures without loss of the solution. In a tight cooling system only water need be installed to replace evaporation losses; however, specific gravity readings must be taken. Any solution lost mechanically through leakage or foaming must be replaced. Under ordinary conditions, ethylene glycol is not injurious to the car finish.

(*b*) *Arctic-winter antifreeze compound.* Arctic-winter antifreeze compound is the coolant prescribed for Arctic weather operations when temperatures are likely to be below −40° F. It is issued ready-mixed for use for *initial* installation and for replenishment when temperatures below −20° F. are anticipated.

Caution: Do not dilute this product by the addition of water, corrosion inhibitor, or any other substance. The flash point of Arctic-winter antifreeze compound of 130° F. Keep open flames away from compound.

Note. Cooling systems containing ethylene-glycol type of antifreeze compound for operations in temperatures as low as −20° F. need not be drained and Arctic-winter antifreeze compound substituted therefor when operations in lower temperature areas (to −40° F.) are anticipated. The ethylene-glycol compound may be strengthened to suit the lower temperature in accordance with specific gravity readings given in table V.

(c) *Denatured ethyl alcohol (grade III).*

1. Denatured ethyl alcohol (grade III) may be used as an emergency substitute for antifreeze compound. It is mixed with water and a corrosion inhibitor added. At 0° F., 2½ pints of grade III denatured ethyl must be included in each gallon of water. At −20° F., −40° F., and −60° F., the amount of alcohol to be included in each gallon of solution will be 4, 5, and 5¾ quarts, respectively.
2. When alcohol is used as an antifreeze, use care not to spill any on the finished portions of the vehicle. If this happens, it should be washed off immediately with a good supply of cold water without wiping or rubbing.
3. When the engine is operated in warmer weather with an alcohol solution in the cooling system, the solution should be checked at regular intervals or replaced with a clean water-alcohol mixture of correct proportions (table IV).
4. The operating temperature of the vehicle when used for heavy-duty work such as towing is usually somewhat higher than 170° F. As a result an alcohol solution is not satisfactory due to rapid evaporation of the alcohol.

(2) *Corrosion inhibitor.*

(a) Protection of the cooling system against corrosion and from rust formation is secured by the introduction of a corrosion inhibitor to the coolant. This inhibitor is added to the coolant under all conditions of ambient temperatures, with or without the use of antifreeze compounds.

(b) Ethylene-glycol-type antifreeze compound contains the correct proportion of corrosion inhibitor when issued. No further inhibitor will normally be required until the solution is being reclaimed for seasonal reuse (*b* (5) below).

(c) Arctic-winter type antifreeze compound contains a corrosion-inhibiting agent when issued. No further inhibitor will be added.

(d) Emergency alcohol/water antifreeze solutions will have corrosion inhibitor added at time of initial mixing at the rate of one 5-ounce can per each 4 gallons of coolant.

(3) *Initial installation of solution.*

(a) *Ethylene-glycol type.* Fill system about one-third full of water (4 U.S. qts). Add the amount of antifreeze compound required for the lowest temperature anticipated as indicated in table IV. Fill with water to slightly below the filler neck. After installing the solution, run the engine until coolant temperature of 180° F. is reached and the thermostat is open. Check a sample of the solution at

Table IV Antifreeze Compound Requirements—11-Qt Cooling System

Ambient temperature (degrees F.)	Amount to be included in each gallon of coolant				Arctic-winter antifreeze compound
	Alcohol		Ethylene-glycol antifreeze compound		
	US quarts	Imperial quarts	US quarts	Imperial quarts	
30	1	⅘	1	⅘	This compound is issued ready mixed for 0° to −65° F. temperatures for both initial installation and replenishment of losses.
20	2⅛	1⅘	2	1⅗	
10	3¼	2⅘	3	2½	
0	4¼	3¾	3¾	3⅕	
−10	5	4⅛	4½	3¾	
−20	5½	4½	4¾	4	
−30	6¾	5⅔	5½	4½	
−40	7¼	6	6	5	
−60	-------	-------	-------	-------	

Note. To be included in, not added to, each gallon of coolant.

Table V. Ethylene-Glycol Antifreeze Compound Requirements and Specific Gravities—11-Qt. Cooling System

Ethylene-glycol antifreeze compound to be included in each gallon of coolant—US quarts	Protection To: (degrees F.)	Specific gravity (solution at room temperature)
0	32	1. 000
2	20	1. 024
3	10	1. 038
3¾	0	1. 049
4½	−10	1. 055
4¾	−20	1. 063
5½	−30	1. 070
6	−40	1. 078

Note. Use only an antifreeze-testing hydrometer float. Amounts are to be included in, not added to each gallon of coolant.

room temperature with a hydrometer and strengthen if necessary. Finally, fill system to prescribed level.

Caution: Do not add inhibitor to freshly prepared antifreeze solution.

(*b*) *Arctic-winter type.* This antifreeze compound is issued ready for use, and will not be diluted by adding water or any other substance.

(*c*) *Denatured alcohol.* Alcohol as an emergency antifreeze compound will be introduced into the cooling system in a manner similar to that given for ethylene-glycol solution ((*a*) above) and in accordance with data given in (1)(*c*) above.

(4) *Replenishment and tests.*

(*a*) Inspect the coolant weekly for strength and color. If the solution becomes a rusty color, it is to be discarded; the cooling system thoroughly cleaned; and new solution added. Do not discard rust-colored solution until new solution is available. In handling antifreeze solution, it is essential that it be kept clean. Use containers and water that are free from dirt and oil.

(*b*) Always use an accurate hydrometer for testing ethylene-glycol solution. To test the hydrometer, mix a solution of one part ethylene-glycol antifreeze compound and two parts of water. This solution should give a reading of 1.049 on the hydrometer, insuring protection to 0° F.

(*c*) Arctic-winter antifreeze compound is used as issued only. Requires no test except for color. Discard when brownish in color.

(5) *Reclamation and storage for re-use.*

(*a*) When either type of antifreeze compound is no longer required in the vehicle, the coolant will be drained into a clean container, strained through a piece of muslin or several thicknesses of cheesecloth.

(*b*) Solution should be greenish or bluish. Discard all solution having a brown or rusty color after straining.

(*c*) Color test only will determine the fitness of Arctic-winter antifreeze compound for re-use.

(*d*) Test ethylene-glycol solution with an antifreeze hydrometer. If suitable for reclamation and re-use, store as described below.

Note. Antifreeze compound and hydrometer should both be at moderate temperature (60° to 70° F.) when tests are made.

(*e*) Reconditioned 55-gallon steel drums or 55-gallon non-returnable light-iron barrels are suitable for storage of both types of antifreeze solution between periods of use.

Note. Neither QMC 5-gallon cans or drums nor 55-gallon returnable steel drums will be used for this storage.

When no suitable containers are available, they may be requisitioned with indication of their use.

(*f*) Stocks of used antifreeze compound, meeting specified requirements and not to be used again within a short period of time, will be turned in to the nearest ordnance unit for stock. Each container will be tagged to indicate the tested specific gravity of its contents (ethylene-glycol antifreeze compound only) and the quantity contained, together with date of test and name of organization.

245. Battery Maintenance in Extreme Cold Weather

a. Lead-acid type storage batteries exposed to operation in temperatures below 32° F. require extra care to insure satisfactory results. When battery temperatures fall below normal, capacity and efficiency diminishes. Approximately three-fifths of the cranking power available at 80° F. is available at 0° F. for a fully-charged battery. An engine using SAE–20 crankcase oil requires 2½ times the power to crank it at 0° F. than it required at 80° F.

b. To prevent freezing, keep the battery fully charged. To deliver sufficient current at a suitable potential, the battery must be slowly warmed preferably above 20° F., and to absorb an adequate charge, battery temperature must approximate 35° F.

Caution. Do not use quick methods to warm batteries. If a battery freezes, let it gradually thaw out in a room of normal temperature. The battery may be saved if freezing has not progressed too far. Never add water at temperatures below 32° F. unless battery is on charge, because the water may freeze unless it is immediately mixed with the electrolyte. Operate vehicle for at least one hour after water is added to an installed battery.

c. Storage batteries will be stored in shelter where the temperature is moderate and will, in addition, be kept fully charged and available for immediate use. This shelter must be separated from ones used for sleeping purposes or tire storage. Specific gravity readings of batteries in extreme cold weather areas is made with readings corrected to 80° F. ambient temperature. Electrolyte of 1.280 specific gravity, and pure, distilled rain or snow water will be carried for replenishment purposes. A fully-charged battery will not freeze at −80° F., but a discharged battery will freeze at 10° F.; thus it is advisable to remove batteries from vehicles when no vehicle heating arrangements are provided.

d. Battery hydrometer floats are calibrated to indicate correctly at only one fixed temperature, 80° F. At low temperatures it is important to correct hydrometer readings. When acid is cooled, it shrinks in volume, becomes more dense and causes the float to rise higher, giving a reading that is too high. For example, a hydrometer reading of 1.280 at electrolyte temperature of 20° F. is actually 1.240. Unless hydrometer is equipped with a thermometer and correction chart, corrected readings at low temperatures may be computed as follows: Subtract four points (0.004) of specific gravity reading for each 10-degree change of electrolyte temperature between 80° F. and the actual temperature of the electrolyte. For example: If the specific gravity reading is 1.312 at 0° F., subtract four points (0.004) for each 10 degrees between 80° F. and 0° F. (80 over 10) or 0.004 x 8, which is 32 points (0.032). Correct reading will be 1.312 minus 0.032, or 1.280. Table VII shows how markedly the hydrom-

eter readings change with relation to temperatures although the calculated specific gravity reading is 1.280 in each case.

Note. Hydrometer float graduation for specific gravity readings normally omit the decimal point; that is, 1280 equals 1.280 specific gravity.

Table VI. Freezing Temperatures of Batteries at Various Specific Gravities

State of charge	Specific gravity of electrolyte (reading corrected to 80° F.)	Freezing point (degrees F.)
Fully charged	1.275 to 1.300	−85 to −95
75 percent charged	1.250	−62
50 percent charged	1.220	−31
25 percent charged	1.160	1
Discharged	1.130	10
Fully discharged	1.000 (water)	32

Table VII. Temperature Correction Chart

Safe operating temperature (degrees F.)	Actual hydrometer specific gravity reading (fully-charged battery)	Calculated specific gravity reading corrected to 80° F.
80	1.280	1. 280
0	1.312	1. 280
−10	1.316	1. 280
−20	1.320	1. 280
−40	1.328	1. 280
−65	1.338	1. 280

246. Electrical System Maintenance in Cold Weather

a. GENERATOR AND STARTER. Check the brushes for wear and the springs for tension. See that brushes and commutators are clean. The large surges of current which occur when starting a cold engine require good contact between brushes and commutators.

b. TEST FAN BELTS. Test fan belts for condition, degree of brittleness, and tension. Tension should be less than under normal service conditions.

c. STARTER DRIVE (par. 141). Wash the throw-out mechanism pinion and flywheel gear in volatile mineral spirits paint thinner to remove grease and dirt. Heavy grease or dirt may keep the gears from being meshed or cause them to remain in mesh after the engine starts running. The latter will ruin the starter and necessitate repairs.

d. WIRING. Check, clean, and tighten all connections, especially the battery terminals. Be sure that no short circuits are present. Spray with ignition insulation compound.

e. IGNITION COIL. Check ignition coil for proper functioning by noting quality of spark.

d. DISTRIBUTOR. Clean thoroughly, and clean or replace points. Check the points frequently. In cold weather, slightly pitted points may prevent engine from starting.

g. SPARK PLUGS. Clean and adjust spark plugs, or replace if necessary. If it is difficult to make the engine fire, reduce the gap to 0.005 inch less than that recommended for normal operation (par. 138). This will make ignition more effective at the reduced voltages likely to prevail.

h. LIGHTS. Inspect the lights carefully. Check for short circuits and presence of moisture around sockets, and inside lamp body.

i. TIMING. Check the timing carefully (par. 136). Be sure that the spark is not unduly advanced or retarded.

j. ICING. Before every start, see that the spark plugs, wiring, and other electrical equipment are free from ice and snow.

247. Dewinterization Procedures

a. When the need for winterization equipment and servicing no longer exists due to seasonal change to higher temperature range or when the vehicle is evacuated to and arrives at a moderate temperature area, the winterization kit will be removed. This will include the heaters, controls and hoses, canvas hood and radiator covers, and the substitution of the standard 150° F. engine thermostat.

b. The cooling system will be completely drained, flushed clean, and filled with clean water. The solution drained will be checked for possibility of re-use by its color (greenish-blue) and discarded if a distinct brownish color.

c. If of suitable color, ethylene-glycol solution will be drained into a container for reclamation and re-use (par. 244*b*(5)). Container will be marked with the specific gravity reading, date, and the name of the organization.

d. If Arctic-winter antifreeze compound is drained, and is of a greenish-blue color, it will be similarly stored in drums for re-use.

e. A complete lubrication service must be made using lubricants and oils as prescribed in the lubrication order for the temperature prevailing.

f. All parts of the winterization kit will be carefully cleaned, serviced, packed and stored for re-use, marked to identify the vehicle from which removed.

248. Extreme Hot Weather Maintenance

a. COOLING SYSTEM.

(1) Thoroughly clean and flush the cooling system (par. 134) at frequent intervals when operating in extreme high temperatures. Formation of scale and rust in the cooling system occurs more often during operation in extremely high

temperatures, therefore, corrosion inhibitor compound should always be added to the cooling liquid. Use only clean water. Avoid the use of water that contains alkali or other substances which may cause scale and rust formations. Use soft water whenever possible.

(2) Inspect fan belts at regular intervals, and adjust if necessary (par. 132). Water pump must be kept in good operating condition (par. 131). Observe throw of water into radiator.

(3) Check operation of thermostat (par. 133). Thermostat must open and close at calibrated temperature to prevent overheating of cooling liquid (par. 133).

(4) Check hose connections frequently for leaks and to insure adequate water passage.

b. BATTERIES.

(1) *Electrolyte level.* In torrid zones, check level of electrolyte in cells daily and replenish, if necessary, with pure distilled water. If this is not available, rain or drinking water may be used. However, continuous use of water with high mineral content will eventually cause damage to batteries and should be avoided.

(2) *Specific gravity.* Batteries operating in torrid climates should have a weaker electrolyte than for temperate climates. Instead of 1.300 to 1.345 specific gravity, the electrolyte as issued will be diluted to readings of 1.210 to 1.270 specific gravity. This is the correct reading for a fully charged battery. This will prolong the life of the negative plates and separators. Under this condition a battery should be recharged at about 1.160 specific gravity.

(3) *Self-discharge.* A battery will self-discharge at a greater rate at high temperatures if standing for long periods. This must be taken into consideration when operating in torrid zones. If necessary to park for several days, remove batteries and store in a cool place.

NOTE. Do not store acid-type storage batteries near stacks of tires, as the acid fumes have a deleterious effect on rubber.

249. Maintenance After Fording

a. GENERAL. Although all of the vehicle unit housings are vented to atmospheric pressure with the exception of the steering gear and front axle spindles, and seals are provided which prevent the free flow of water into the housings, it must be realized that, due to the necessary design of these assemblies, there is the possibility that some water may enter, epsecially during a prolonged submersion. It is advisable, therefore, that the following service be accomplished on all vehicles which have been submerged or exposed to volumes of water, especially salt water, before they are driven extensively in

regular road service. This will guard against possible failure in subsequent operation.

b. Removal of Fording Kit. After fording operations are completed, remove the air intake tube at right side of windshield and the exhaust pipe extension at right, rear corner of body. Stow the components carefully to avoid loss or damage.

c. Cleaning and Lubrication.

(1) *Chassis and body.* Lubricate the chassis thoroughly as directed in the lubrication order. Do more than the *usual* lubrication job, making sure that lubricant is generously forced into each bearing to force out any water present. Wheels will be removed for bearing cleaning and repacking in every case. Drain and clean out body and tool compartment. Touch up paint where necessary.

(2) *Axles.* Check the lubricant in both axle housings. Should there be evidence that water has entered, drain the housings and flush them thoroughly with a half-and-half mixture of oil (OE–10) and volatile-mineral-spirits paint thinner. Refill to filler plug level with the correct grade lubricant. Locate and remedy the cause of the leak.

(3) *Transmission and transfer.* Check the lubricant in both the transmission and transfer. Should there be evidence that water has entered, drain the housings and flush them thoroughly with a half-and-half mixture of oil (OE–10) and volatile-mineral-spirits paint thinner. Locate and remedy the cause of the leak. Refill to filler plug level with the correct grade of lubricant

(4) *Wheels and brakes.*

(*a*) Remove the front wheels and flush out the knuckle housings with a half-and-half mixture of oil (OE–10) and volatile-mineral-spirits paint thinner. Refill to filler plug level with the correct lubricant. Remove rear wheels. Wash all wheel bearings thoroughly with volatile-mineral-spirits paint thinner after which repack, assemble, and adjust them as outlined in paragraph 158.

(*b*) With wheels removed, dry out brake linings and clean rust and scum off of brake drum face. Check wheel brake cylinders for water in brake fluid. Check brake master cylinder similarly. Refill system as required.

(5) *Steering gear.* Remove and disassemble steering gear housing. If the lubricant is found to be contaminated due to the entrance of water, clean the housing thoroughly with a half-and-half mixture of oil (OE–10) and volatile-mineral-spirits paint thinner. Refill with correct grade of lubricant.

(6) *Air cleaner and oil filter.* Clean and refill the oil-bath type air cleaner. Drain and clean oil filter if necessary. Check

the engine oil and change it if there is evidence that water has entered the crankcase.

(7) *Engine valve chamber.* Clean out engine valve chamber.

d. Batteries. Check the batteries for quantity and specific gravity of electrolyte to be sure no water entered through the special vent caps. This is of special importance should the vehicle have been submerged in salt water.

e. Starter. Remove the pipe plug from the starter overruning clutch housing, and drain water which may have accumulated. Do not overlook replacing the plug.

f. Distributor. Remove the plug located at the lower edge of the distributor housing as a check to determine if any water has entered the distributor. Use care not to lose the copper gasket. Should any water show in the plug opening, it is advisable to remove the distributor for cleaning the interior.

g. Electrical Connections. Check all connections for corrosion, particularly the quick-disconnect type connections.

h. Fuel System. Clean all components of system (carburetor bowl, fuel filter, pump, tank, lines, etc.) Change oil in air cleaner.

CHAPTER 4

SHIPMENT AND LIMITED STORAGE AND DESTRUCTION TO PREVENT ENEMY USE

Section I. SHIPMENT AND LIMITED STORAGE

250. Domestic Shipping Instructions

a. PREPARATION. When shipping the ¼-ton 4 x 4 utility truck M38 (Willys-Overland) interstate or within the zone of interior, the officer in charge of preparing the shipment *will be responsible* for furnishing vehicles to the carriers for transport in a serviceable condition properly cleaned, preserved, painted, lubricated, etc., as prescribed in SB 9–4.

Caution: Personnel withdrawing vehicles from a limited storage status for domestic shipment must not remove preservatives other than to insure that matériel is complete and serviceable, in which case the preservative must be restored. The removal of preservatives is the responsibility of depots, ports, or field installations (posts, camps, and stations) receiving the shipments.

b. ARMY SHIPPING DOCUMENTS. Prepare all Army shipping documents accompanying freight in accordance with TM 38–705.

251. Limited Storage Instructions

a. GENERAL.

(1) Vehicles received already processed for domestic shipment as indicated on the Vehicle Processing Record Tag (DA AGO Form 9–3), need not be reprocessed unless the inspection performed on receipt of vehicles reveals corrosion, deterioration, etc.

(2) Completely process vehicle if the processing data recorded on the tag indicates that vehicle has been rendered ineffective by operation, freight shipping damage, or upon receipt of vehicles directly from manufacturing facilities.

(3) Vehicles to be prepared for limited storage must be given a limited technical inspection and processed as prescribed in SB 9–63. The results and classification of the vehicle will be entered on DA AGO Form 461–5.

b. RECEIVING INSPECTIONS.

(1) Report of vehicles received in a damaged condition or improperly prepared for shipment will be reported on DD Form 6 in accordance with SR 745–45–5.

(2) When vehicles are inactivated, they are to be placed in a limited storage status for periods not to exceed 90 days. Stand-by storage for periods in excess of 90 days will normally be handled by ordnance maintenance personnel only.

(3) Immediately upon receipt of vehicles, they must be inspected and serviced as prescribed in chapter 2, section I. Perform a systematic inspection and replace or repair all missing or broken parts. If repairs are beyond the scope of the unit and the vehicle will be out of service for an appreciable length of time, place vehicle in a limited storage status and attach a tag to the vehicles specifying the repairs needed. The report of these conditions will be submitted by the unit commander for action by an ordnance maintenance unit.

c. INSPECTIONS DURING STORAGE. Perform a visual inspection periodically to determine general condition. If corrosion is found on any part, remove the rust spots, clean, paint, and treat with the prescribed preservatives.

Note. Touch-up painting will be in accordance with TM 9-2851.

d. REMOVAL FROM LIMITED STORAGE.

(1) If the vehicles are not shipped or issued upon expiration of the limited storage period, vehicles may either be processed for another limited storage period or be further treated for stand-by storage (vehicles inactivated for periods in excess of 90 days up to 3 years) by ordnance maintenance personnel.

(2) If vehicles to be shipped will reach their destination within the scope of the limited storage period, they need not be reprocessed upon removal from storage unless inspection reveals it to be necessary according to anticipated in-transit weather conditions.

Note. All used vehicles that are to be reissued to troops within the continental limits of the United States will be inspected prior to shipment to determine their serviceability in accordance with TB ORD 385.

(3) Deprocess vehicles when it has been ascertained that they are to be placed into immediate service. Remove all rust-preventive compounds and thoroughly lubricate as prescribed in chapter 3, section II. Inspect and service vehicles as prescribed in chapter 3, section III.

(4) Repair and/or replace all items tagged in accordance with paragraph *b*(3) above.

e. STORAGE SITE. The preferred type of storage for vehicles is under cover in open sheds or warehouses whenever possible. Where it is found necessary to store vehicles outdoors, they must be protected against the elements as prescribed in SB 9–47.

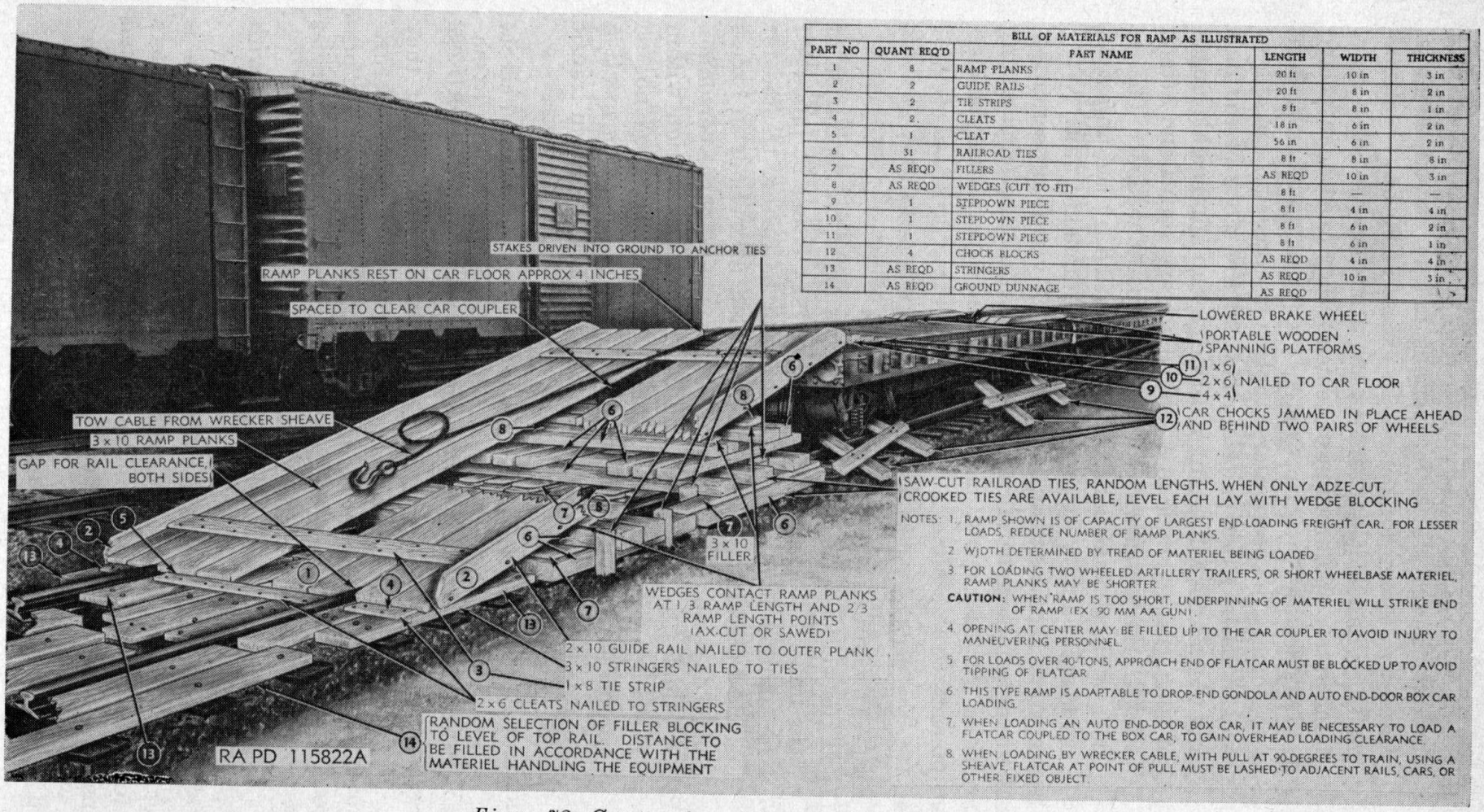

BILL OF MATERIALS FOR RAMP AS ILLUSTRATED

PART NO	QUANT REQ'D	PART NAME	LENGTH	WIDTH	THICKNESS
1	8	RAMP PLANKS	20 ft	10 in	3 in
2	2	GUIDE RAILS	20 ft	8 in	2 in
3	2	TIE STRIPS	8 ft	8 in	1 in
4	2	CLEATS	18 in	6 in	2 in
5	1	CLEAT	56 in	6 in	2 in
6	31	RAILROAD TIES	8 ft	8 in	8 in
7	AS REQD	FILLERS	AS REQD	10 in	3 in
8	AS REQD	WEDGES (CUT TO FIT)	8 ft	—	—
9	1	STEPDOWN PIECE	8 ft	4 in	4 in
10	1	STEPDOWN PIECE	8 ft	6 in	2 in
11	1	STEPDOWN PIECE	8 ft	6 in	1 in
12	4	CHOCK BLOCKS	AS REQD	4 in	4 in
13	AS REQD	STRINGERS	AS REQD	10 in	3 in
14	AS REQD	GROUND DUNNAGE	AS REQD		

NOTES:
1. RAMP SHOWN IS OF CAPACITY OF LARGEST END-LOADING FREIGHT CAR. FOR LESSER LOADS, REDUCE NUMBER OF RAMP PLANKS.
2. WIDTH DETERMINED BY TREAD OF MATERIEL BEING LOADED.
3. FOR LOADING TWO WHEELED ARTILLERY TRAILERS, OR SHORT WHEELBASE MATERIEL, RAMP PLANKS MAY BE SHORTER.
CAUTION: WHEN RAMP IS TOO SHORT, UNDERPINNING OF MATERIEL WILL STRIKE END OF RAMP (EX 90 MM AA GUN).
4. OPENING AT CENTER MAY BE FILLED UP TO THE CAR COUPLER TO AVOID INJURY TO MANEUVERING PERSONNEL.
5. FOR LOADS OVER 40-TONS, APPROACH END OF FLATCAR MUST BE BLOCKED UP TO AVOID TIPPING OF FLATCAR.
6. THIS TYPE RAMP IS ADAPTABLE TO DROP-END GONDOLA AND AUTO END-DOOR BOX CAR LOADING.
7. WHEN LOADING AN AUTO END-DOOR BOX CAR, IT MAY BE NECESSARY TO LOAD A FLATCAR COUPLED TO THE BOX CAR, TO GAIN OVERHEAD LOADING CLEARANCE.
8. WHEN LOADING BY WRECKER CABLE, WITH PULL AT 90-DEGREES TO TRAIN, USING A SHEAVE, FLATCAR AT POINT OF PULL MUST BE LASHED TO ADJACENT RAILS, CARS, OR OTHER FIXED OBJECT.

Figure 73. Construction of improvised loading ramp.

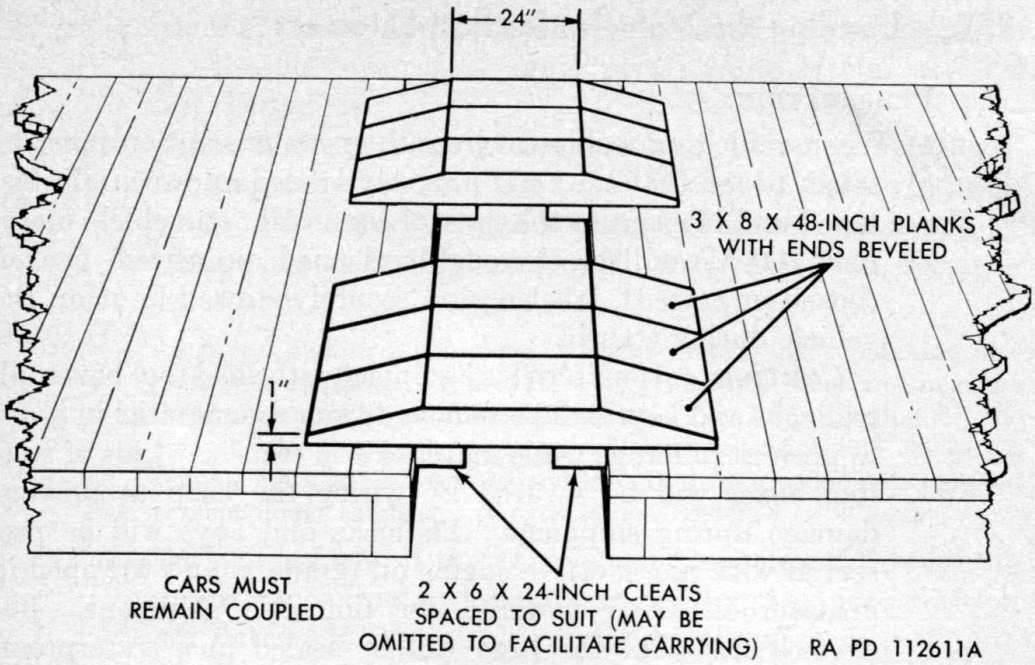

Figure 74. Construction of improvised spanning platforms.

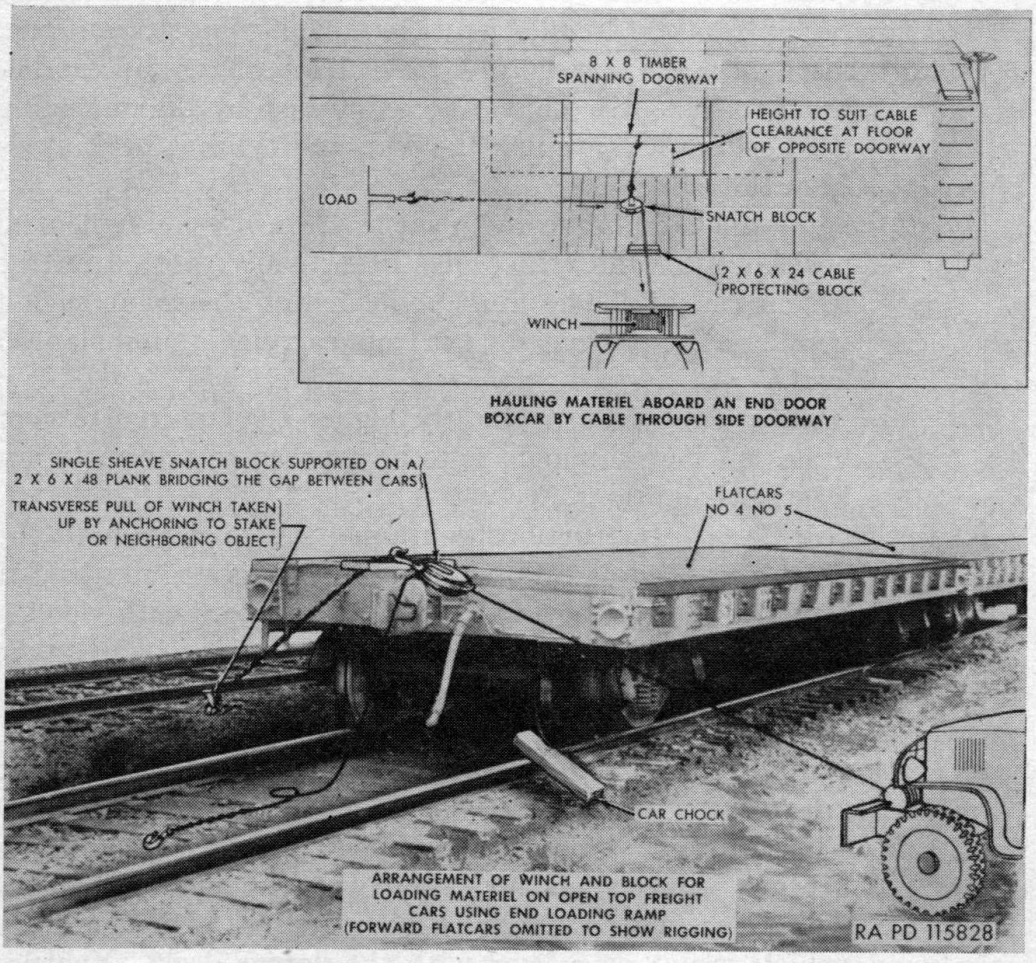

Figure 75. Method of powering the towing cable.

252. Loading the Vehicles for Rail Shipment

a. PREPARATION.

(1) When vehicles are shipped by rail, every precaution must be taken to see that they are properly loaded and securely fastened and blocked to the floor of car. All "on vehicle matériel" (OVM) will be thoroughly cleaned, preserved, packed (boxed or crated), labeled, and securely stowed in or on the vehicle during transit.

Caution. If matériel is equipped with steel tool boxes, all padlocks and keys will be removed from the matériel in order to prevent pilferage while matèriel is in transit. Lids of steel tool boxes will be secured by wiring the hasp to prevent damage during shipment. Padlocks and keys will be preserved with preservative engine oil (grade 1) and wrapped in greaseproof barrier material for domestic shipment. For oversea shipment the item will be sealed in a waterproof-greaseproof wrapping or bag. Locate all wrapped padlocks and keys in the shipping container with the accessories.

(2) Prepare all vehicles for rail shipment in accordance with paragraph 250*a*. In addition take the following precautions:

(*a*) Disconnect the battery to prevent its discharge by vandalism or accident. This is accomplished by disconnecting the positive lead, taping the end, and tying it back away from the battery.

(*b*) Apply the hand brake and place the transmission in neutral position after the vehicle has been finally spotted on the freight car. Vehicles must be loaded on the car in such a manner as to prevent the car from carrying an unbalanced load.

(*c*) Increase tire pressure slightly higher than normal except in cases where shipment is to be exposed to extremely hot weather conditions.

b. TYPES OF CARS. Instructions contained herein pertain to the loading of vehicles on gondola cars (an open top car having fixed sides, fixed or drop ends and solid bottom), and flatcars (cars with wooden floors laid over sills and without sides or ends but equipped with stake pockets), and in boxcars (cars equipped with side or side and end doors).

c. METHOD OF LOADING VEHICLES ON FREIGHT CARS.

(1) *Flatcar loading.*

(*a*) When suitable hoisting equipment is not available for loading vehicles on our subsequent unloading from a flatcar, an end ramp must be used in cases where the vehicle is not on a level with the flatcar deck. Vehicles on a warehouse platform or loading dock can be pivoted

over spanning platforms aboard a flatcar spotted adjacent to the platform, then again pivoted into lateral position on the flatcar.

(*b*) When unboxed vehicles must be loaded from ground level, a ramp may be improvised ((4) below) by borrowing railroad ties normally found stacked in railroad yards and by procuring necessary planking. An ideal end ramp is shown in place in figure 73.

Note. Railroad ties alone, stacked without deck planking and not securely anchored, provide a very unstable ramp and must be rearranged upon each successive use. The torque action of the wheels of self-propelled vehicles will tend to collect and collapse a simple stack of railroad ties and should, therefore, not be attempted except under conditions of extreme emergency.

(*c*) To load vehicle, if the vehicle can be operated through no interference from processing, drive it up ramp into position on flatcar; if the vehicle cannot be operated, tow it onto the improvised apron at the base of the ramp and unhitch. Using a cable laid along the center line of the freight car attached to vehicle, it is pivoted to point towards the ramp and towed up ramp to its position on the flatcar.

Caution: Follow forward movement of vehicle up ramp by chocking behind one or more wheels on the ramp.

(*d*) Steel or wooden spanning platforms or bridges are used to cover the gaps between cars. Flatcar brake wheels must first be lowered to floor level to permit passage. A pair of improvised spanning platforms is shown in place in figure 74. These spanning platforms are moved along the train by hand as the vehicle advances.

(*e*) The above method of train loading requires careful advance planning as to the order of loading, so that vehicles are arranged on each flatcar under prescribed methods and combinations.

(*f*) For powering the towing cable, a vehicle with winch is spotted at *right angles* to the train (fig. 75), located at about the third or fourth flatcar to facilitate signaling and because of cable length limits. A single-sheave snatch block located between cars on the train center line will provide the necessary *lateral* pull. Vehicles passing this point can be towed by a vehicle on the ground with personnel guiding its passage. A long tow cable from the towing vehicle will lessen the tendency of the vehicle to stray from the center line of the train.

Note. The snatch block fastening chain must be lashed to an adjacent solidly fixed object to offset the cross pull of the powered

winch (fig. 75). Snatch block movement is allowed for low front winches and high rear (wrecker) winches.

(2) *Gondola car loading.*

(*a*) Fixed-end type gondola cars may only be loaded when hoisting facilities are available for initial loading at destination. Hopper- or drop-bottom gondola cars are not to be used for shipments of unboxed vehicles without false flooring and hoisting facilities.

(*b*) Drop-end gondola cars may be loaded exactly as described for flatcars ((1) above). Height of fixed sides is immaterial. Vehicles may progress through a gondola car by passing over the two inwardly dropped ends and over spanning platforms. Vehicles selected to remain in a gondola car are first moved to the closed end of the car, then spread out for blocking after the remaining end is closed and latched.

Note. Do not block vehicle flush against ends of gondola cars. When ordering gondola cars, specify inside width required as some may be received with gussets along the inner sides which affect clearance.

(3) Boxcar loading.

(*a*) End-door type boxcars are spotted with the door end toward the ramp and loaded as described for flatcars ((1) above) except that loading must be accomplished by pushing the vehicle or towing by cable and block through the side door (fig. 75).

Note. When ordering end-door boxcars, it must be remembered that some automobile boxcars may be received with an overhead built-in rack which affects inside height calculations. Specify inside height required. Keep open end-doors clear of traffic on adjacent tracks.

(*b*) Side-door boxcars are provided with either single or double rolling doors at each side and must be loaded from a platform of about the same level as the boxcar floor or from an adjacent flatcar. Automobile cars of this type have large side-door openings and present less difficulty in loading, however, ordinary boxcars may require the use of roller automobile jacks to maneuver the vehicle into place. Steel plates or spanning platforms must be used to bridge the gap between platform and car (fig. 74).

Note. In emergency when no roller-jacks are available, the vehicle may be moved sideways by means of an ordinary jack canted against the axle from the floor. Wetting both the floor of the car and the bridging will reduce the friction of the tires.

(4) *Loading ramp.*

(*a*) A ramp for end loading of vehicles on open-top freight cars may be improvised when no permanent ramps or hoisting facilities are available. An ideal ramp suitable for the

loading of most ordnance items is shown in figure 73. Length of planking must be determined with consideration to under-chassis clearance, in order to clear the hump at upper end of ramp.

Caution: Personnel guiding the vehicle up the ramp must exercise care when working close to the ramp planking.

(*b*) The flatcar bearing the ramp must be securely blocked against rolling, particularly when the car brakes are not applied as in train loading. Successive cars must remain coupled and be additionally chocked at several points along the train when ground towing of vehicles aboard the train is being effected.

(*c*) Whenever the freight cars are not on an isolated track or blocked siding, each end approach to the train must be placarded (blue flag or light) to advise that men are at work and that the siding may not be entered beyond those points.

(*d*) Upon completion of the loading operation, the ramp planks and bridging devices should be loaded on the train for use in unloading operations. Random sizes of timbers used in building the approach apron up to rail level should be included. All materials should be securely fastened to the car floors after vehicles are blocked in place, and entered upon the bill of lading (B/L). Railroad ties borrowed for the operation need not be forwarded to the unloading point unless specifically required and only with the consent of the owner.

d. Loading Rules. For general loading rules pertaining to rail shipment of ordnance vehicles, refer to TB 9–OSSC–G.

Warning: The height and width of vehicle when prepared for rail transportation must not exceed the limitations indicated by the loading table as prescribed in section II, AR 700–105. Whenever possible local transportation officers must be consulted about the limitations of the particular railroad lines to be used for the movement to avoid delays, danger, or damage to equipment.

253. Blocking the Vehicles for Rail Shipment

a. General. All blocking instructions specified herein are minimum and are in accordance with Association of American Railroads "Rules Governing the Loading of Commodities on Open Top Cars." Additional blocking may be added as required at the discretion of the officer-in-charge. Double-headed nails may be used if available, except in the lower piece of two-piece cleats. All item reference

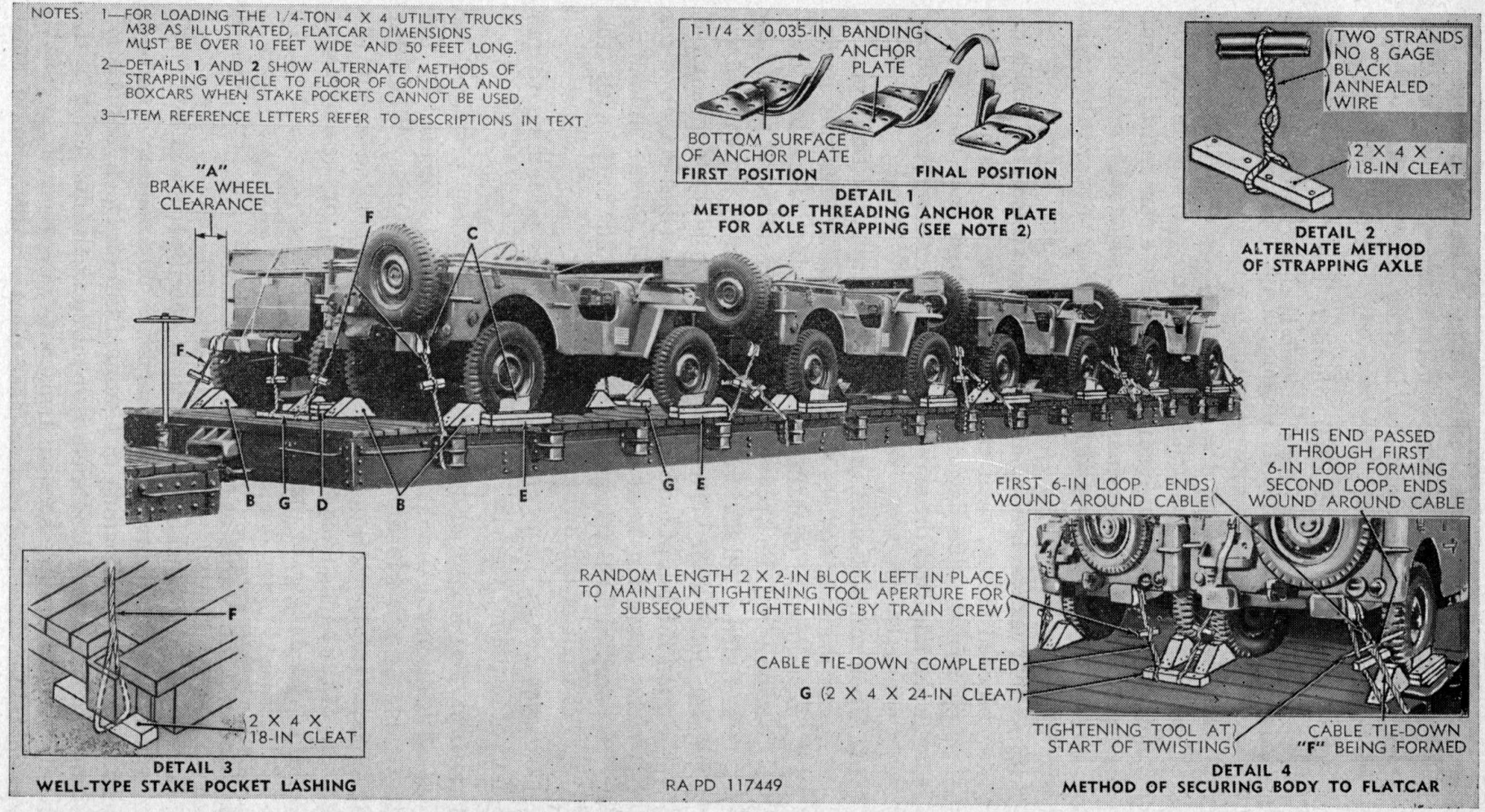

Figure 76. Blocking the ¼-ton 4 x 4 utility truck M38 for rail shipment.

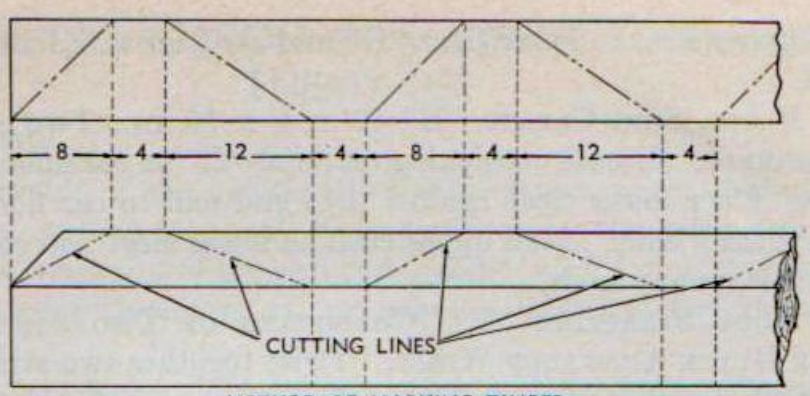

METHOD OF MARKING TIMBER FOR CUTTING CHOCK BLOCKS

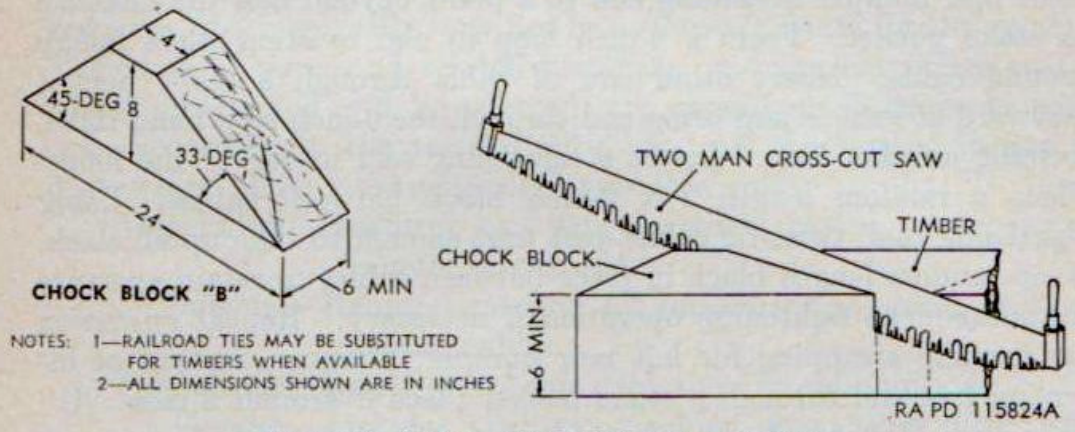

Figure 77. Cutting chock blocks from timbers.

letters given below refer to the details and locations as shown in figure 76.

Note. Any loading methods or instructions developed by any source which appear in conflict with this publication or existing loading rules of the carriers, must be submitted to the Chief of Ordnance, Washington 25, D. C., for approval.

b. Brake Wheel Clearance "A." Load vehicles on cars with a minimum clearance of at least four inches below and six inches above, behind, and to each side of the brake wheel (fig. 76). Increase clearance as much as is consistent with proper location of load.

c. Chock Blocks "B" (6 x 8 x 24 in., fig 77, Four Required per Vehicle). Locate the 45° surface of the chock block against the front of each front wheel and against the rear of each rear wheel. Nail the heel of the chock blocks to the floor of the car with three fortypenny nails. Toenail the sides of the chock blocks to car floor with two fortypenny nails.

d. Cushioning Material "C." Locate suitable cushioning material such as waterproof paper, burlap, etc. between tires and cleats. The cushioning material must protrude beyond cleats on car floor and above cleats against tire.

e. Inside Floor Side Cleats "D" (2 x 4 x 30 in., Two Required Between Each Pair of Adjoining Inside Wheels). Locate cushioning material "C" against tires and place lower cleats "D" between tires on car floor. Nail to car floor with four thirtypenny nails.

Nail upper cleat to lower clear "D" and car floor with four fortypenny nails.

f. Floor Side Cleats "E" (2 x 4 x 30 in., Two per Wheel Required). Locate cushioning material "C" on car floor and against tires. Place lower cleat against tires and nail to car floor with four thirtypenny nails. Nail upper cleat to lower cleat and car floor with four fortypenny nails.

g. Body Strapping "F" (Consisting of Two Strands No. 8 Gage Black Annealed Wire). Twist together two strands of wire of length desired to form a cable. Insert one end of cable through the right rear bumper extending end to a point beyond half the distance to stake pocket. Form a 6-inch loop in end twisting wires *tightly* around cable. Insert other end of cable through a stake pocket rearward of vehicle and bring end through the 6-inch loop hand tight, forming another loop. Insert a tightening tool in one of the loops. Place a random length 2 x 2-inch block between cables. Using tightening tool, twist-tie cables just taut enough to take up all slack. Keep random length block in place between cables to retain aperture for subsequent tightening operation if necessary. Repeat operation for forming strapping for left rear bumper, however, instead of inserting free end through a stake pocket place it around a cleat "G" on center of floor of car. Nail cleat to car floor with fortypenny nails. Repeat operation for adjoining vehicle strapping outside of vehicle to a stake pocket and inside to cleat "G." Repeat strapping for front of vehicle.

Note. The above method of blocking will be limited to loading on flatcars over ten feet in width and 50 feet in length. For boxcar and gondola car loading and blocking, number of vehicles per freight car will be limited by the inside length and width of freight cars. Where stake pockets cannot be used for strapping, floor cleats will be substituted.

254. Oversea Shipment

a. Inspection Standards. All used vehicles destined for oversea use will be inspected prior to shipment to determine their serviceability in accordance with standards given in TB ORD 385.

b. Preparation for Shipment to Ports. All vehicles destined to ports of embarkation for oversea shipment that have already been processed for domestic shipment (par. 250) will be further processed in accordance with SB 9–4.

Note. Ports of embarkation will supplement any necessary or previously omitted processing upon receipt of vehicle.

Section II. DESTRUCTION OF MATERIEL TO PREVENT ENEMY USE

255. General

a. Destruction of the vehicle when subject to capture or abandonment in the combat zone, will be undertaken by the using arm only when, in the judgment of the unit commander, such action is necessary in accordance with orders of, or policy established by, the army commander.

b. The information which follows is for guidance only. Certain of the procedures outlined require the use of explosives and incendiary grenades which normally may not be authorized items for the vehicle. The issue of these and related materials, and the conditions under which destruction will be effected, are command decisions in each case, according to the tactical situation. Of the several means of destruction, those most generally applicable are—

Mechanical—Requires ax, pick mattock, sledge, crowbar, or similar implement.

Burning—Requires gasoline, oil, incendiary grenades, or other inflammables.

Demolition—Requires suitable explosives or ammunition.

Gunfire—Includes artillery, machine guns, rifles using rifle grenades, and launchers using antitank rockets. Under some circumstances hand grenades may be used.

In general, destruction of essential parts, followed by burning, will usually be sufficient to render the matériel useless. However, selection of the particular method of destruction requires imagination and resourcefulness in the utilization of the facilities at hand under the existing conditions. Time is usually critical.

c. If destruction to prevent enemy use is resorted to, the matériel must be so badly damaged that it cannot be restored to a usable condition in the combat zone either by repair or cannibalization. Adequate destruction requires that all parts essential to the operation of the matériel, including essential spare parts, be destroyed or damaged beyond repair. However, when lack of time and personnel prevents destruction of all parts, priority is given to the destruction of those parts most difficult to replace. Equally important, the same essential parts must be destroyed on all like matériel so that the enemy cannot construct one complete unit from several damaged ones.

d. If destruction is directed, due consideration should be given to—

(1) Selection of a point of destruction that will cause greatest obstruction to enemy movement and also prevent hazard to friendly troops from fragments or ricocheting projectiles which may occur incidental to the destruction.

(2) Observance of appropriate safety precautions.

256. Destruction of the ¼-Ton 4 X 4 Utility Truck, M38

a. Method No. 1—by Burning.

(1) Remove and empty portable fire extinguishers.

(2) Puncture fuel tank as near the bottom as possible, collecting gasoline for use as outlined in (6) below.

(3) Using an ax, pick, sledge, or other heavy implement, smash all vital elements such as distributor, carburetor, generator, ignition coil, fuel pump, spark plugs, air cleaner, lights, instruments, and controls. If time permits, and a sufficiently heavy implement is available, smash the engine cylinder block and head, crankcase, and transmission.

(4) Slash tires. If tires are inflated, exercise care to prevent injury should the tire blow out while being slashed. Whenever practicable, it is usually preferable to deflate tires before slashing.

(5) Explosive ammunition, if present, should be removed from packing or other protective material. Place ammunition in and about the vehicle so that it will be fully exposed to the fire and in such locations that the greatest damage will result from its detonation. Remove any safety devices from ammunition.

(6) Pour gasoline and oil in and over the entire vehicle—ignite and take cover. Elapsed time: about 6 minutes.

b. Method No. 2—With Demolition Materials.

(1) Remove and empty portable fire extinguishers.

(2) Puncture fuel tank.

(3) Prepare two 2-pound charges of EXPLOSIVE, TNT (two 1-lb blocks or equivalent per charge). Set the charges as follows:

(*a*) *One* charge on top of the clutch housing.

(*b*) The *second* charge as low on the left side of the engine as possible. Connect the two charges for simultaneous detonation with detonating cord. Provide for dual priming to minimize the possibility of a misfire. For priming, either a nonelectric blasting cap crimped to at least 5 feet of safety fuse (safety fuse burns at the rate of 1 foot in 30 to 45 seconds—test before using) or an electric blasting cap and firing wire may be used. If a nonelectric blasting cap and safety fuse are used, the fuse should be sufficiently long and so positioned that it may be ignited from the outside of the vehicle since gasoline from the punctured fuel tank may be exploded prematurely by the burning fuse.

(4) Destroy the tires by placing an incendiary grenade under all tires including the spare, exercising care to prevent premature ignition of gasoline or its vapor by the burning grenades.

(5) Detonate the charges. If primed with nonelectric cap and safety fuse, ignite and take cover; if primed with electric blasting cap, take cover before firing the charges.

Caution: Cover must be taken without delay since a premature explosion of the charges may be caused by the incendiary fires. Elapsed time: about 6 minutes.

Caution: Due consideration should be given to the highly inflammable nature of gasoline and its vapor. Carelessness in its use may result in painful burns.

c. METHOD No. 3—BY GUNFIRE.

(1) Remove and empty portable fire extinguishers.

(2) Puncture fuel tank.

(3) Destroy the tires as in method No. 1 (above).

(4) Destroy the vehicle by gunfire using artillery, machine guns, rifles using rifle grenades, or launchers using antitank rockets. Fire on the vehicle aiming at the engine, axles, wheels, and body. Although one well-placed direct hit may destroy the vehicle, several hits are usually required for complete destruction unless an intense fire is started, in which case the vehicle may be considered destroyed. Elapsed time: about 6 minutes.

Caution: Firing at ranges of 500 yards or less should be from cover.

APPENDIX

REFERENCES

1. Publications Indexes

The following publication indexes and lists of current issue should be consulted frequently for latest changes or revisions of references given in this appendix and for new publications relating to material covered in this manual:

a. Index of administrative publications ..... SR 310–20–5
b. Index of Army motion pictures and film strips ..... SR 110–1–1
c. Index of Army training publications ..... SR 310–20–3
d. Index of blank forms and Army personnel classification tests ..... SR 310–20–6
e. Index of technical manuals, technical regulations, technical bulletins, supply bulletins, lubrications orders, modification work orders, tables of organization and equipment, reduction tables, tables of allowances, tables of organization, tables of equipment, and tables of basic allowances ..... SR 310–20–4
f. Introduction and index (supply catalogs) ..... ORD 1
g. Military training aids ..... FM 21–8

2. Supply Catalogs

The following catalogs of the Department of the Army Supply Catalog pertain to this material:

a. AMMUNITION.

Land mines and fuzes, demolition material, and ammunition for simulated artillery and grenade fire ..... ORD 11 SNL R–7

b. MAINTENANCE AND REPAIR.

Antifriction bearings and related items ..... ORD 5 SNL H–12
Cleaners, preservatives, lubricants, recoil fluids, special oils, and related maintenance materials ..... ORD 3 SNL K–1
Electrical fittings ..... ORD 5 SNL H–4
Electrical fundamentals ..... TM 1–455
Items of soldering, metallizing, brazing and welding materials: Cases and related items ..... ORD 3 SNL K–2
Lubricating equipment, accessories and related dispensers ..... ORD (*) SNL K–3
Miscellaneous hardware ..... ORD 5 SNL H–2
Oil seals ..... ORD 5 SNL H–13
Pipe and hose fittings ..... ORD 5 SNL H–6
Standard hardware ..... ORD 5 SNL H–1
Tool-sets (common), specialists' and organizational ..... ORD 6 SNL G–27, Sec 2
Tool-sets (special), motor vehicles ..... ORD 6 SNL G–27, Sec 1

(*) See ORD 1, Introduction and Index, for published catalogs of the ordnance section of the Department of the Army Supply Catalog.

3. Explanatory Publications

The following explanatory publications contain information pertinent to this material and associated equipment.

a. AMMUNITION.

Ammunition, general	TM 9–1900
Explosives and demolition	FM 5–25
Regulations for firing ammunition for training, target practice, and combat	SR 385–310–1

b. CAMOUFLAGE.

Camouflage	TM 5–267
Camouflage, basic principles	FM 5–20
Camouflage materials and manufacturing techniques	FM 5–20H
Camouflage of vehicles	FM 5–20B

c. DECONTAMINATION.

Decontamination	TM 3–220
Decontamination procedures	SB 5–52
Defense against chemical attack	FM 21–40
Miscellaneous gas protective equipment	TM 3–290

d. GENERAL.

Automotive brakes	TM 10–565
Automotive power transmission units	TM 10–585
Chassis, body, and trailer units	TM 10–560
Conservation of oil	SB 9–19
Conventional signs, military symbols, and abbreviations	FM 21–30
Cooling systems: Vehicles and powered ground equipment	TM 9–2858
Dictionary of United States Army terms	SR 320–5–1
Driver selections, training, and supervision, wheeled vehicles	TM 21–300
Driver's manual	TM 21–305
First aid for soldiers	FM 21–11
Fuels and carburetion	TM 10–550
General safety manual	TM 20–350
General supply: Winterization equipment for automotive matériel	SB 9–16
Inspection of ordnance material	TM 9–1100
Military vehicles	TM 9–2800
Motor transport	FM 25–10
Motor vehicles	AR 700–105
Mountain operations	FM 70–10
Operations in snow and extreme cold	FM 70–15
Passage of obstacles other than mine fields	TM 5–220
Precautions in handling gasoline	AR 850–20
Principles of automotive vehicles	TM 9–2700
Registration of motor vehicles	AR 850–10
Storage batteries, lead-acid type	TM 9–2857

e. MAINTENANCE AND REPAIR.

Basic maintenance manual	TM 38–650
Cleaning, preserving, sealing and related materials issued for ordnance matériel	TM 9–850
Hand, measuring, and power tools	TM 10–590
Instruction guide: Care and maintenance of ball and roller bearings	TM 37–265
Lubrication	TM 9–2835
Maintenance and care of hand tools	TM 9–867
Maintenance and care of pneumatic tires and rubber threads	TM 31–200
Modification of ordnance matériel	SB 9–38

Motor vehicle inspection and preventive maintenance services	TM 37–2810
Painting instructions for field use	TM 9–2851
Preparation of ordnance matériel for deep water fording	TM 9–2853
Preventive maintenance of electric motors and generators	TM 55–405
Reclamation of parts from general purpose-type vehicles	SB 9–62

f. SHIPMENT AND LIMITED STORAGE.

Army marking directive	TM 38–414
Army shipping document	TM 38–705
Instruction guide, ordnance packaging and shipping (posts, camps, and stations)	TM 9–2854
Ordnance storage and shipment chart—Group G	TB 9–OSSC–G
Preparation of unboxed ordnance matériel for shipment	SB 9–4
Protection of ordnance matériel in open storage	SB 9–47
Shipment of supplies and equipment	SR 745–45–5
Standards for overseas shipment and domestic issue	SB 9–2
Storage, inspection and issue of unboxed serviceable motor vehicles; preparation of unserviceable vehicles for storage; and deprocessing of matériel prior to operation	SB 9–63

INDEX

	Paragraph	Page
Accelerator pedal. (*See* Pedals.)		
Accidents, field report	2	1
Air cleaner:		
Adjustment	122	110
Installation	122	110
Removal	122	110
Charge indicators:		
Description	216	174
Installation	218	177
Location	216	174
Removal	218	177
Antifreeze requirements (table IV)	244	190
Batteries:		
Antifreeze requirements (table V)	244	190
Data	194	157
Description	194	157
Freezing temperature (table VI)	245	193
Batteries and cables:		
Cleaning	195	163
Data	194	161
Description	194	157
Installation	195	164
Removal	195	163
Batteries and lighting system. (*See* Batteries and lighting.)		
Blackout driving lights:		
Data	194	161
Description	194	157
Blackout marker lights:		
Data	194	161
Description	194	157
Body: Description	230	180
Brakes, adjustment:		
Hand-brake drum	182	147
Hand-brake lever and linkage	182	147
Hand-brake shoes	182	147
Service brake	178	142
Service-brake bleeding	181	147
Service-brake drums	178	142
Service-brake hydraulic lines and fittings	181	146
Service-brake master cylinder	179	144
Service-brake pedal and linkage	178	143
Service-brake shoes	178	144
Service-brake wheel cylinders	180	145
Brake system, description:		
Master brake cylinder	176	140
Parking brake	176	140
Service brake	176	140
Button, horn	216	176

	Paragraph	Page
Carburetor controls and linkage:		
Accelerator:		
Adjustment	123	110
Installation	123	111
Removal	123	110
Choke control:		
Adjustment	123	110
Installation	123	111
Removal	123	110
Hand throttle:		
Adjustment	123	110
Installation	123	111
Removal	123	110
Choke control	123	111
Circuits	214	171
Cluster, instrument	217	177
Clutch:		
Adjustment	118	105
Controls and linkage	119	105
Description	116	105
Replacement	120	107
Controls, description:		
Controls and instruments	10–20	13
Location of controls and instruments	10–20	14
Cooling system, description:		
Fan and drive belts	132	115
General	129	113
Radiator	130	114
Thermostat	133	116
Water pump	131	114
Curtains:		
Installation	236	182
Removal	236	183
Stowing	236	183
Data:		
General	5	3
(See also under specific items.)		
Performance	5	7
Description of vehicle	3	2
Destruction of matériel to prevent enemy use	255	209
Dimmer switch:		
Installation	227	179
Removal	227	179
Testing	227	179
Distributor and ignition coil assembly:		
Adjustment	137	121
Installation	137	120
Removal	137	120
Engine:		
Coordination	113	104
Cylinder-head gasket	68	92
Data	64	89
Description	64	89
Exhaust manifold	66	91

Engine—Continued	Paragraph	Page
Installation	115	104
Oil filter	72	93
Oil pan	71	93
Operation	25	16
Removal	113	104
Starting	24	16
Stopping	25	18
Valve-clearance adjustment	70	93
Equipment. (*See* Tools and equipment.)		
Exhaust pipes:		
Installation	128	113
Removal	127	113
Exhaust system, description	126	112
Fan and drive belts:		
Cleaning	132	115
Installation	132	115
Removal	132	115
Fenders, description	241	184
Field report of accidents	2	2
Filter, oil	72	93
Forms:		
Description	2	1
Listing	2	1
Frame, description	230	180
Freezing temperatures of batteries (table VI)	245	192
Front axle:		
Description	156	131
Maintenance	157	133
Installation	167	137
Removal	166	137
Front springs:		
Installation	186	152
Removal	186	150
Fuel gage:		
Installation	219	177
Removal	219	177
Fuel pump:		
Installation	125	112
Removal	125	112
Fuel system:		
Data	121	108
Description	121	108
Fuel tank:		
Installation	124	111
Removal	124	111
Gages:		
Description	216	174
Description and location:		
Charge indicator	218	177
Fuel	219	177
Oil pressure	221	177
Temperature	220	177

	Paragraph	Page
Generator:		
Description	143	124
Installation	143	124
Regulator	144	126
Removal	143	124
Head lights:		
Data	194	161
Description	194	157
Horn button:		
Description	216	174
Installation	226	179
Removal	226	179
Hose:		
Installation	115	104
Removal	114	104
Ignition. (*See* Ignition system.)		
Ignition coil:		
Installation	137	120
Removal	137	120
Ignition switch:		
Installation	138	122
Removal	138	122
Ignition system:		
Data	135	118
Description	135	118
Distributor	137	120
General	135	118
Spark plugs	138	122
Timing	136	120
Instruction plates:		
Publication	4	3
Shipping	4	3
Instrument cluster:		
Description	216	174
Installation	217	177
Removal	217	177
Levers, description and location:		
Hand throttle	11	13
Power take-off	206	107
Transfer shift	12	13
Transmission gearshift	11	13
Lights:		
Adjustment	196	165
Data	194	161
Description	194	157
Blackout drive	194	157
Blackout market	194	157
Head lights	194	157
Radio receptacle	194	161
Replacement	197–202	165
Stop lights	194	157
Tail lights	194	157
Trailer connector	194	157

	Paragraph	Page
Light switch:		
Installation	225	179
Removal	225	179
Testing	225	179
Limited storage:		
General	251	198
Inspections	251	198
Receiving inspections	251	198
Removal from limited storage	251	199
Storage site	251	199
Loading and blocking truck for shipment:		
Axle strapping	253	208
Brake wheel	253	207
Chock blocks	253	207
Cross cleats	253	208
Cushioning material	253	207
Floor side cleats	253	207
General	253	205
Loading ramp	252	202
Loading rules	252	205
Method of loading	252	204
Preparation	252	203
Type of cars	252	202
Wheel side cleats	253	208
Wheel strapping	253	208
Lubrication:		
Order	36	38
Points of application	37	38
Reports and records	37	38
Under unusual conditions	38	38
Maintenance:		
Preventive services:		
After operation	42	47
At-the-halt	42	47
Before operation	42	47
By driver or operator (table II)	42	48
By organizational maintenance mechanics	43	63
Driving-operation	42	47
General	42	47
Maintenance operations (table II)	42	47
Monthly	43	63
Procedures (organizational maintenance mechanics)	43	65
Purpose	43	64
Road test (table III)	43	65
Services	40–43	48
Special lubrication	43	64
Tools and equipment	35	35
Trouble shooting	44–62	75
(See also under specific items.)		
Muffler:		
Installation	128	113
Removal	127	113

	Paragraph	Page
Name plates:		
Crankcase valve	4	3
Distributor	4	3
Engine	4	3
Generator	4	3
Generator regulator	4	3
Starter	4	3
Truck	4	3
Winch	4	3
Oil filter	72 and preface	93
Oil pressure gage:		
Installation	221	178
Removal	221	177
Operating the truck:		
Cleaning	41	46
Driving	25	16
Forms	2	1
Operation	25	17
Preventive maintenance	40–42	46
Records	2	1
Reports	2	1
Shifting gear	25	17
Starting the engine	24	16
Stopping	25	18
Towing	26	19
Operation under unusual conditions:		
Battery maintenance in cold weather	245	192
Cold weather maintenance	242	185
Cold weather	28	20
Cooling system in cold weather	244	187
Deep water fording	33	32
Eelectrical system in cold weather	246	193
Extreme cold weather	28–243	20
Hot weather	30–248	24
In mud, snow, ice, sand, and flood	31	25
Lubrication in cold weather	38	38
Miscellaneous maintenance in cold weather	243	185
Winterization equipment	28–247	20
Painting	39	45
Panel lights:		
Installation	223	178
Removal	223	178
Description	216	174
Pedal, description:		
Clutch	119	105
Service-brake	178	142
Starter	141	123
Pitman arm:		
Installation	192	155
Removal	192	155
Plates, name. (*See* Name plates.)		
Power plant:		
Installation	86–112	99
Removal	74–95	94

	Paragraph	Page
Power-take-off:		
Installation	210	169
Removal	210	168
Replacement	210	169
Preventive maintenance. (*See* Maintenance.)		
Propeller shaft:		
Description	153	130
Installation	155	131
Removal	154	131
Replacement	154–155	131
Pumps: Water	129–131	113
Radiator:		
Cleaning	134	117
Installation	130	114
Removal	131	114
Radio receptacle:		
Data	194	157
Description	194	157
Installation	202	166
Removal	202	166
Radio suppression:		
Description	212	170
Purpose	211	170
Rear axles:		
Installation	175	139
Removal	175	139
Description	168	137
Rear springs:		
Installation	186	152
Removal	186	150
Records	2	1
Reports	2	1
Road test (table III)	43	
Run-in test	9	11
Sending units:		
Description	229	180
Installation	229	180
Removal	229	180
Service-brake pedal		
Service upon receipt of material:		
Correction of deficiencies	7	8
Preliminary service	8	9
Purpose	6	8
Shipping: instruction plates	4	3
Shipping instructions:		
Army shipping documents	250	198
Preparation for shipping	250	198
Removal of preservatives	250	198
Shock absorbers:		
Installation	187	153
Removal	187	152

	Paragraph	Page
Slave-battery receptacle:		
Data	194	157
Description	194	157
Installation	201	166
Removal	201	166
Spark plugs:		
Adjustment	138	122
Installation	138	122
Removal	138	122
Speedometer:		
Description	216	174
Installation	222	178
Removal	222	178
Springs and shock absorbers, description:		
Front springs	183	149
Rear springs	183	149
Rear spring seats	183	149
Shock absorbers	183	149
Starter pedal	140	122
Starter. (*See* Starting system.)		
Starting system:		
Data	140	122
Description:		
General	141	123
Generator	143	124
Generator regulator	144	124
Starter	141	123
Installation	141	123
Removal	141	123
Replacement	141	123
Steering gear:		
Removal	193	155
Installation	193	156
Adjustment	193	157
Steering wheel:		
Installation	191	154
Removal	191	154
Stop and tail lights:		
Data	194	157
Description	194	157
Stop-light switch:		
Installation	228	180
Removal	228	180
Testing	228	180
Switches:		
Auxiliary	218	177
Description	216	174
Dimmer	227	179
Light	225	179
Main	216	174
Tabulated data	5	3
Tail pipe:		
Installation	126, 128	112
Removal	126–127	113
Temperature correction chart (table VII)	245	193

	Paragraph	Page
Temperature gage:		
Installation	220	177
Removal	220	177
Thermostat:		
Installation	133	116
Removal	133	116
Throttle, hand lever	11	13
Tires:		
Inflation	205	167
Installation	205	167
Removal	205	167
Tools and equipment:		
General	33	28
Special designed (table I)	34	37
Trailer connector:		
Data	194	157
Description	194	157
Installation	200	166
Removal	200	166
Transfer:		
Coordination with unit	150	130
Description	149	129
Installation	152	130
Removal	151	130
Transmission:		
Description	145	126
Gearshift lever	11	13
Tabulated data	145	127
Replacement	146, 148	128
Transmission replacement:		
Coordination with unit	146	128
Installation	148	128
Removal	147	128
Trouble shooting:		
Battery and lighting system	60	87
Brakes	57	85
Clutch	46	78
Cooling system	49	79
Engine	45	75
Exhaust system	48	79
Front axle	55	83
Fuel system	47	78
Ignition system	50	80
Propeller shafts	54	83
Radio-interference suppression	63	88
Rear axles	56	84
Springs and shock absorbers	58	86
Starting and charging system	51	81
Steering gear	59	87
Transfer	53	83
Transmission and power take-off	52	82
Wheels, tires, and hubs	61	88
Winch	62	88

	Paragraph	Page
Water pump:		
Installation	131	115
Removal	131	114
Wheels:		
Installation	204	166
Removal	204	166
Tires and hubs, descriptions	203	166
Winch:		
Controls	206	167
Description	206	167
Installation	210	168
Operation	209	168
Removal	210	168
Windshield-wiper control	230	180
Wiring, description	213	170
Wiring and harness:		
Identification	215	171
Location	215	171