TM5-1028

TO 19-40AAC-5

WAR DEPARTMENT TECHNICAL MANUAL

GEREGISTREERD
- 4 JAN. 1956
I. d. O. BBV
N7-109

GRADER, ROAD MOTORIZED DIESEL, 12 FT. MOLDBOARD MODEL 101D

★

MAINTENANCE MANUAL AND PARTS CATALOG

WAR DEPARTMENT • NOVEMBER 1942

COMMANDO BASIS 101 GI. BA. RESERVEDELEN DEPOT PEL.

WAR DEPARTMENT

TM 5–1028, Maintenance Manual and Parts Catalog, Motor Grader Type 101 Diesel, Model G–23564–AG, published by the Galion Iron Works & Mfg. Co., is furnished for the information and guidance of all concerned.

[AG 062.11 (4/26/41) PC (C) (10 Jun 41)]

G. C. MARSHALL
Chief of Staff

OFFICIAL:
J. A. ULIO
Major General
The Adjutant General

GENERAL INDEX

Operators Manual.....Section 1
Maintenance Manual.....Section 2
Parts List Manual.....Section 3

IMPORTANT:

101 Diesel Graders are equipped with either Bosch or I.H.C. Injection Pump.

Bosch Pump prior to M3465 Reg. No. W810086
I. H. C. Pump on and after M3465

P. O. Number	Units	Model No.	Government Registration Numbers
55441	78	G-23564-AG	W-88441 to W-88518 inclusive

The following Galion serial numbers apply to the above contract:

M-2917 to M-2925 Inclusive
M-2928 Only
M-2930 to M-2935 Inclusive
M-2968 to M-2972 Inclusive
M-2985 to M-3009 Inclusive
M-3013 to M-3018 Inclusive
M-3020 to M-3025 Inclusive
M-3030 to M-3049 Inclusive

55897 672 G-23564-AG W-89771 to W-810442 inclusive

The following Galion serial numbers apply to the above contract:

M-3050 to M-3186 Inclusive
M-3219 to M-3250 Inclusive
M-3297 to M-3311 Inclusive
M-3330 to M-3343 Inclusive
M-3346 to M-3376 Inclusive
M-3379 to M-3495 Inclusive
M-3508 to M-3517 Inclusive
M-3527 to M-3538 Inclusive
M-3542 to M-3549 Inclusive
M-3554 to M-3560 Inclusive
M-3578 to M-3587 Inclusive
M-3595 to M-3597 Inclusive
M-3600 to M-3655 Inclusive
M-3660 to M-3723 Inclusive
M-3725 to M-3880 Inclusive

PI-2364 850 G-23564-AG W-829209 to W-830058 inclusive

The following Galion serial numbers apply to the above contract:

M-4181 to M-5030 Inclusive

PI-2967 26 G-23564-AG W-832344 to W-832369 inclusive

The following Galion serial numbers apply to the above contract:

M-5031 to M-5056 Inclusive

PI-3193 33 G-23564-AG W- to W- inclusive

The following Galion serial numbers apply to the above contract:

M-5076 to M-5108 Inclusive

GALION PROVIDES A COMPLETE RANGE OF SERVICE FROM ORDINARY BLADING TO BANK TRIMMING

The Galion No. 101 Motor Grader is more than a maintenance machine . . . its greater range of blade adjustments enables it to perform operations in construction work which heretofore only a pull grader could perform . . . thus in this one machine Galion offers a service range capable of meeting any grader requirement . . . and only one man needed to do the work. Its full reversible blade permits adjustment to every angle . . . for flat bottom ditching . . . forming V-shaped ditches . . . trimming shoulders, bank cutting, and for working in reverse gear when necessary.

It is a heavy duty machine in every sense of the word . . . all parts being built to a strength far in excess of needed requirements . . . assuring dependable performance over a long period of time.

The Galion 101 Motor Grader incorporates the following important features:

High arched front axle for ample clearance over BIG windrows.

Heavy steel frame head casting accurately machined.

Mono-membered, boxed-type frame of exceptional strength and rigidity; all-welded construction—narrow at front for perfect visibility of work and maximum range of blade adjustment—wide at rear for stability.

All adjustments hydraulically made by heavy duty hydraulic cylinders or hydraulic motors. Centralized finger-tip controls.

Roomy 3 passenger cab.

Galion all-gear driven double drive with full flexibility.

Deeply curved moldboard fitted with flush end bits, fully reversible.

Heavy steel, accurately-machined circle supported in multiple guides with both vertical and lateral adjustments provided.

Drawbars are equipped with large ball and socket draft connection.

Effortless hydraulic steering.

INDEX

TO

OPERATOR'S MANUAL

GENERAL INSTRUCTIONS 1

INSTRUMENTS, CONTROLS & GAUGES 2

ENGINE OPERATION, MAINTENANCE & ADJUSTMENT 3

LUBRICATION 4

MAINTENANCE AND ADJUSTMENT OF UNIT 5

STORAGE AND HANDLING 6

OPERATOR'S MANUAL

INDEX

BEFORE STARTING ENGINE..... 1
STARTING ENGINE..... 1
COLD WEATHER OPERATION..... 1
ANTI-FREEZE SOLUTIONS..... 1

OPERATOR'S MANUAL

I. BEFORE STARTING ENGINE—

1. Check oil level in air cleaner.
2. Check water in cooling system. Capacity, 18 gallons. Use soft or rain water when possible. Do not pour cold water in empty system when engine is hot.
3. Fill fuel system with clean fuel oil.
4. Check oil level in transmission and overdrive housing.
5. Transmission gear should be in neutral position. Overdrive shift in neutral position will make cranking easier.

II. STARTING ENGINE—

1. Refer to Engine Section, Page 3 of Operator's Manual for Starting Instructions.

COLD WEATHER OPERATION—

1. See Lubrication Chart for proper viscosity oil.
2. For temperature below freezing, anti-freeze solutions as listed below are recommended.
3. *Keep* cooling solution *within operating range* as shown *on heat indicator by adjustment of radiator curtain.* This is important for efficient and trouble-free operation.

ANTI-FREEZING SOLUTIONS

IMPORTANT! Alcohol should not be used as an anti-freeze solution as it will boil away at average operating temperature.

Do not use a solution of calcium chloride or any alkaline solution as they are injurious to metal parts.

Water cooling system capacity is 18 U. S. gallons

Percent by Volume	*Ethylene Glycol*		
	Freezing Point		*Specific Gravity*
	°C	*°F*	
0%	0	32	1.000
10%	—3	26	1.016
20%	—9	16	1.031
30%	—16	3	1.045
40%	—24	—11	1.058
50%	—35	—31	1.070

INDEX

OPERATIONS 4-14
CONTROLS 1
TIRE PUMP 1
CONTROL LOCATION ..... 2 & 3

CONTROLS, INSTRUMENTS AND GAUGES

INSTRUMENT PANEL Fig. 2 as used on P.O. 55441 and PO 55897

1. Horn Button—Mounted on top of electrical instrument panel.
2. Lock Switch—Removable key type lock switch which locks the electrical system.
3. Starter Button—Push button starter switch controlling operation of starting motor.
4. Ammeter—Charge or discharge rate on battery.
5. Light Switch—Three toggle switches. First controls headlights and tail light. Second controls rear head light. Third controls top or clearance lights.
6. Oil Gauge—Pressure of lubricating oil in motor.

INSTRUMENT PANEL Fig. 2A on PO. PI-2364, PO. PI-2967 and PI-3193

1. Horn Button—Mounted on top of electrical instrument panel.
2. Lock Switch—Locks the electrical system—key not removable.
3. Starter Button—Push button starter switch controlling operation of starting motor.
4. Ammeter—Charge or discharge rate on battery.
5. Light Switch—Operated from top of instrument panel. This switch has three positions with lock pins. The first lighting position which controls blackout lights may be made without pushing the lock pin. See Fig. 2B for operation of switch.
   - 1st position—Blackout position.
   - 2nd position—Service position.
   - 3rd position—Service stop light only.
   - Push in for off position.
6. Oil Gauge—Pressure of lubricating oil in motor.
7. Instrument Panel Light.

Conversion lever (not illustrated)—Pull back to start engine on gasoline. Push forward to convert to Diesel operation.

Clutch Pedal—Left pedal in operator's position as indicated. (Fig. 4)

Brake Pedal—Right pedal in operator's position. (Fig. 4)

Gear Shift Lever—At right and at easy reach from operator's position. (Fig. 4)

Overdrive Shift Lever—At right and front of Gear Shift Lever. (Fig. 4)

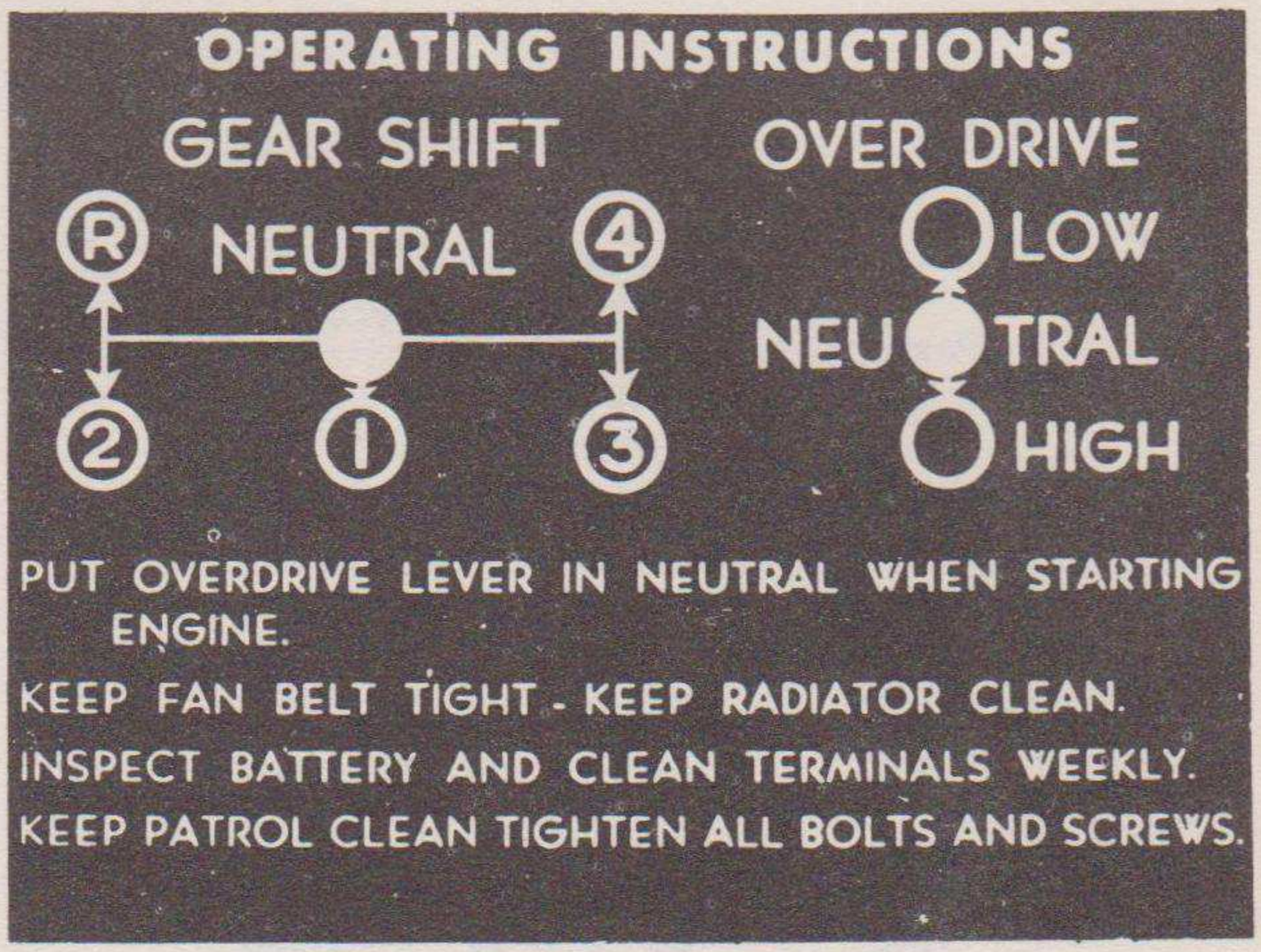

Emergency or Parking Brake—At left of operator. (Fig. 4)

Manifold—Complete control of hydraulic operations of machine. Operations as shown on Fig. 3.

1. Control for left hand moldboard lift. Push forward to lower moldboard—pull back to raise moldboard.
2. Scarifier Control. Push forward to lower scarifier—pull back to raise scarifier.

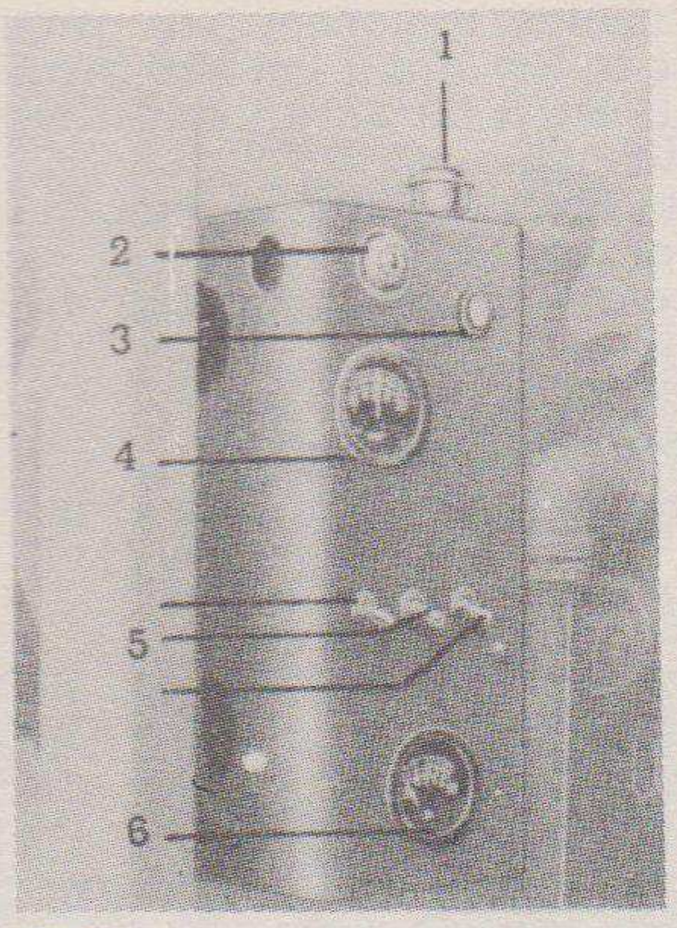

Fig. 2—Electrical Controls

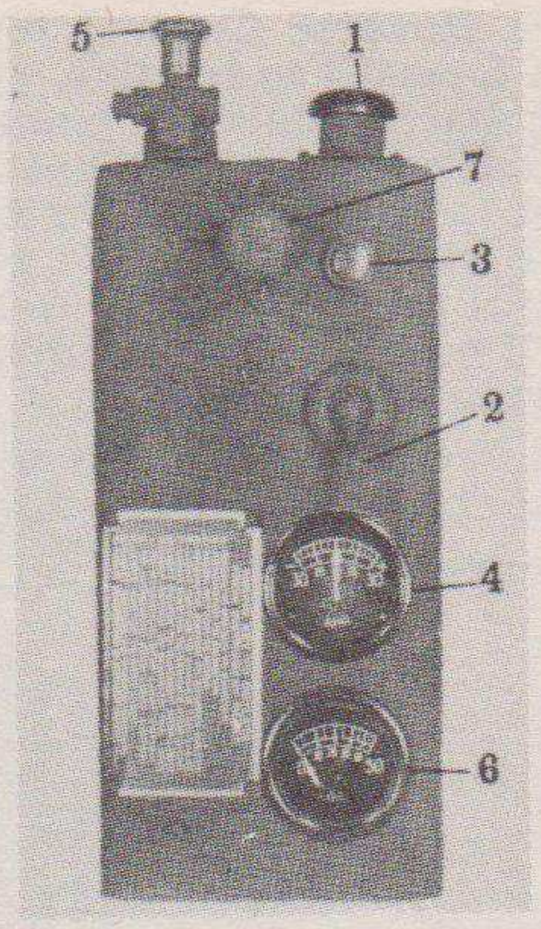

Fig. 2A

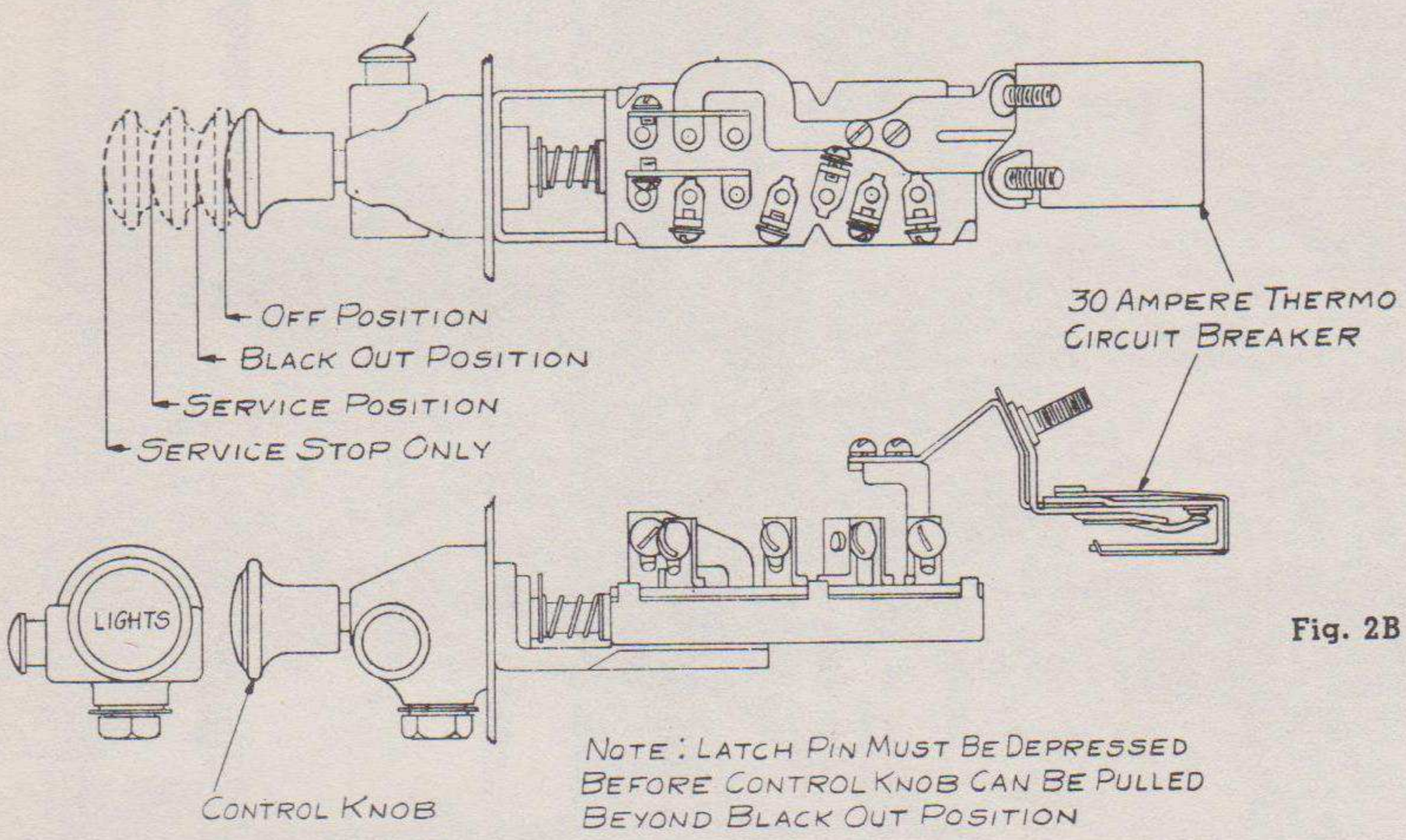

Fig. 2B

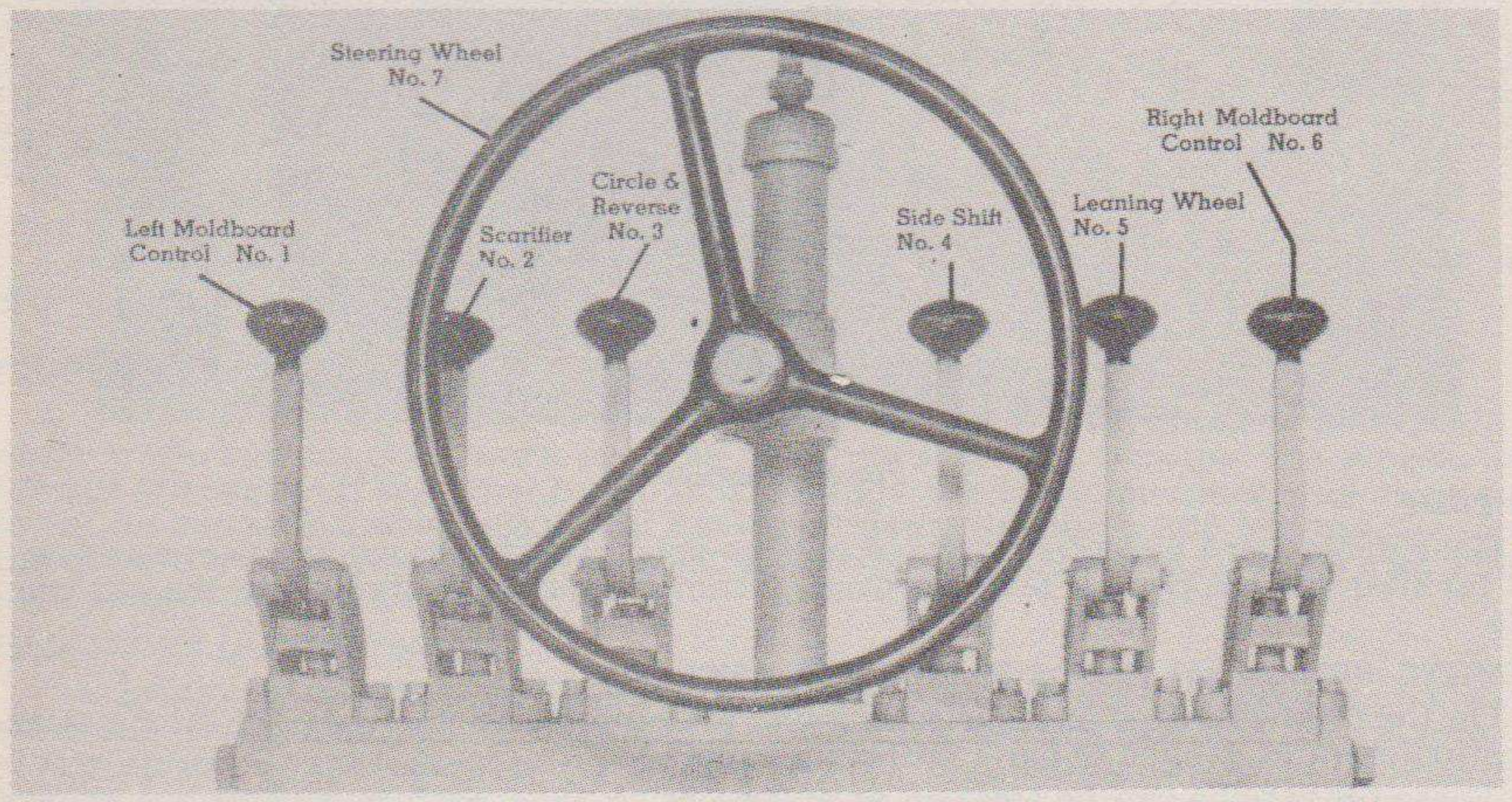

Fig. 3—Manifold

3. Circle Reverse Control for turning moldboard to proper cutting angle. Push forward to revolve circle to left—pull back to revolve circle to right.
4. Moldboard Side Shift Control. Push forward to shift moldboard to left—pull back to shift moldboard to right.
5. Front Leaning Wheel Control. Push forward to lean front wheels to right—pull back to lean front wheels to left.
6. Control for right hand moldboard lift. Push forward to lower moldboard—pull back to raise moldboard.
7. Steering Wheel.

Choke—Located in heel plate below operator's seat. (Fig. 4)

Throttle Control—Located in heel plate below operator's seat. (Fig. 4)

Odometer—Records mileage of travel.

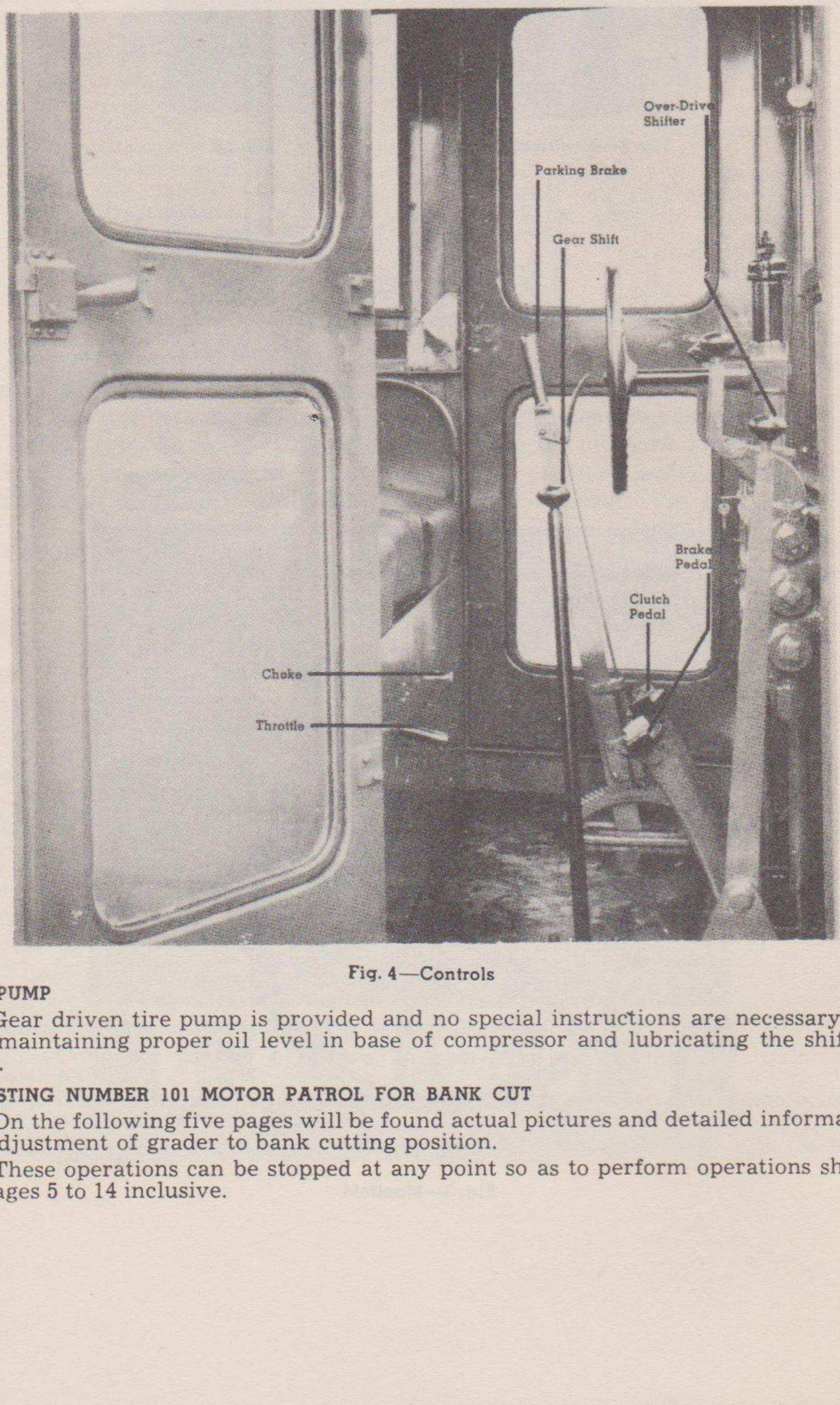

Fig. 4—Controls

TIRE PUMP

Gear driven tire pump is provided and no special instructions are necessary except maintaining proper oil level in base of compressor and lubricating the shifting parts.

ADJUSTING NUMBER 101 MOTOR PATROL FOR BANK CUT

On the following five pages will be found actual pictures and detailed information for adjustment of grader to bank cutting position.

These operations can be stopped at any point so as to perform operations shown on pages 5 to 14 inclusive.

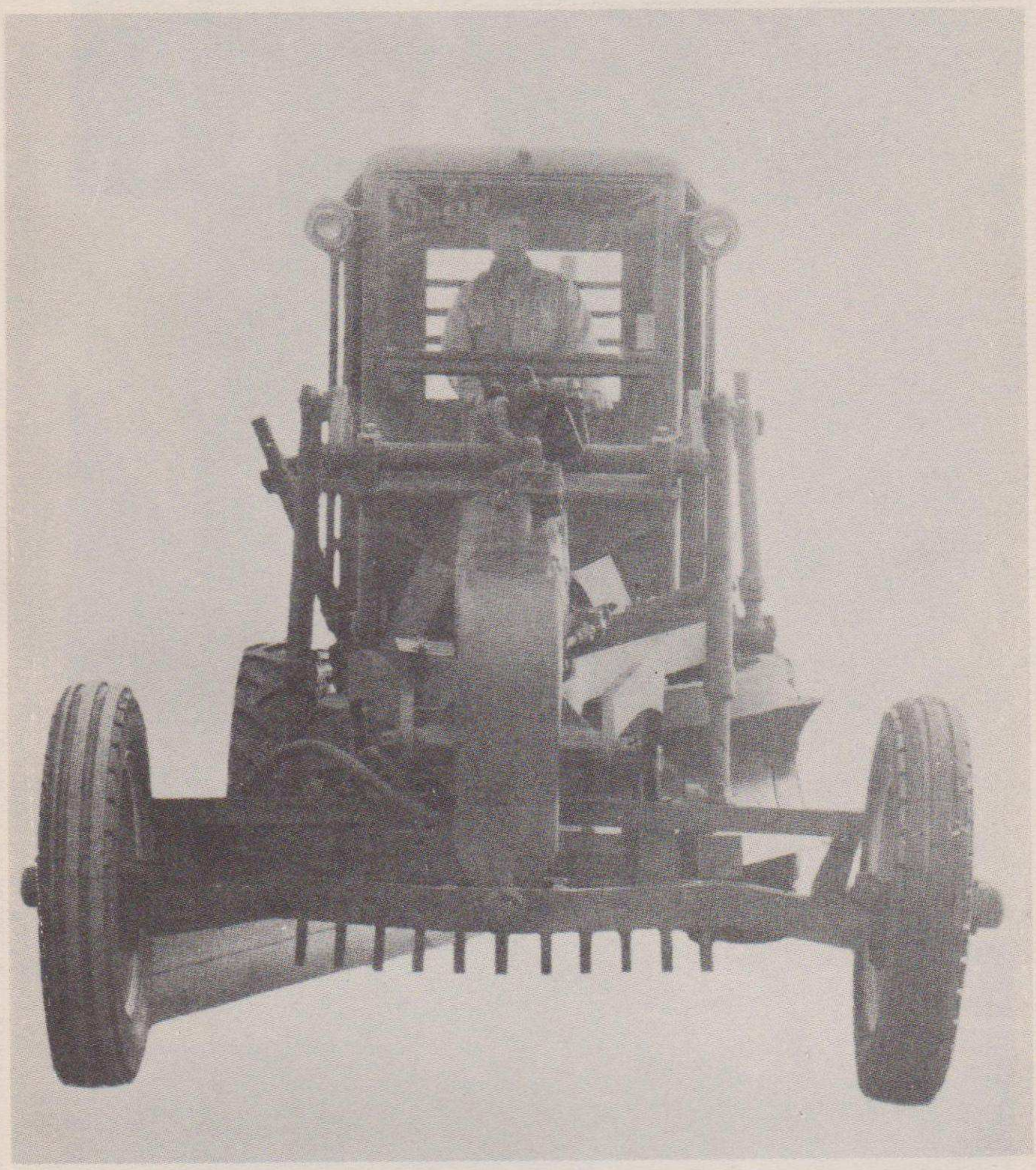

Above photo shows the Galion Number 101 Motor Patrol with moldboard in a normal grading position.

FRONT LEANING WHEELS

The front leaning wheels on the Galion 101 Motor Grader make it possible to do more work and tougher work such as bank cutting, etc., because the wheels lean toward the work. If the wheels remained straight while the moldboard is being used to cut on one side the wheels would have a tendency to slip, while leaning the top of the wheels toward the work gives greater traction and reduces slippage which allows the operator to do much better work.

LOCK-FRONT LEANING WHEEL

A locking mechanism for locking the leaning wheel axle in vertical position if provided for the purpose of locking the wheels in a vertical position for shipping or at the option of the operator for long drives or regular maintenance work where leaning wheels are not required. The axle is locked by inserting one bolt through each of the two locking plates and leaning wheel bar.

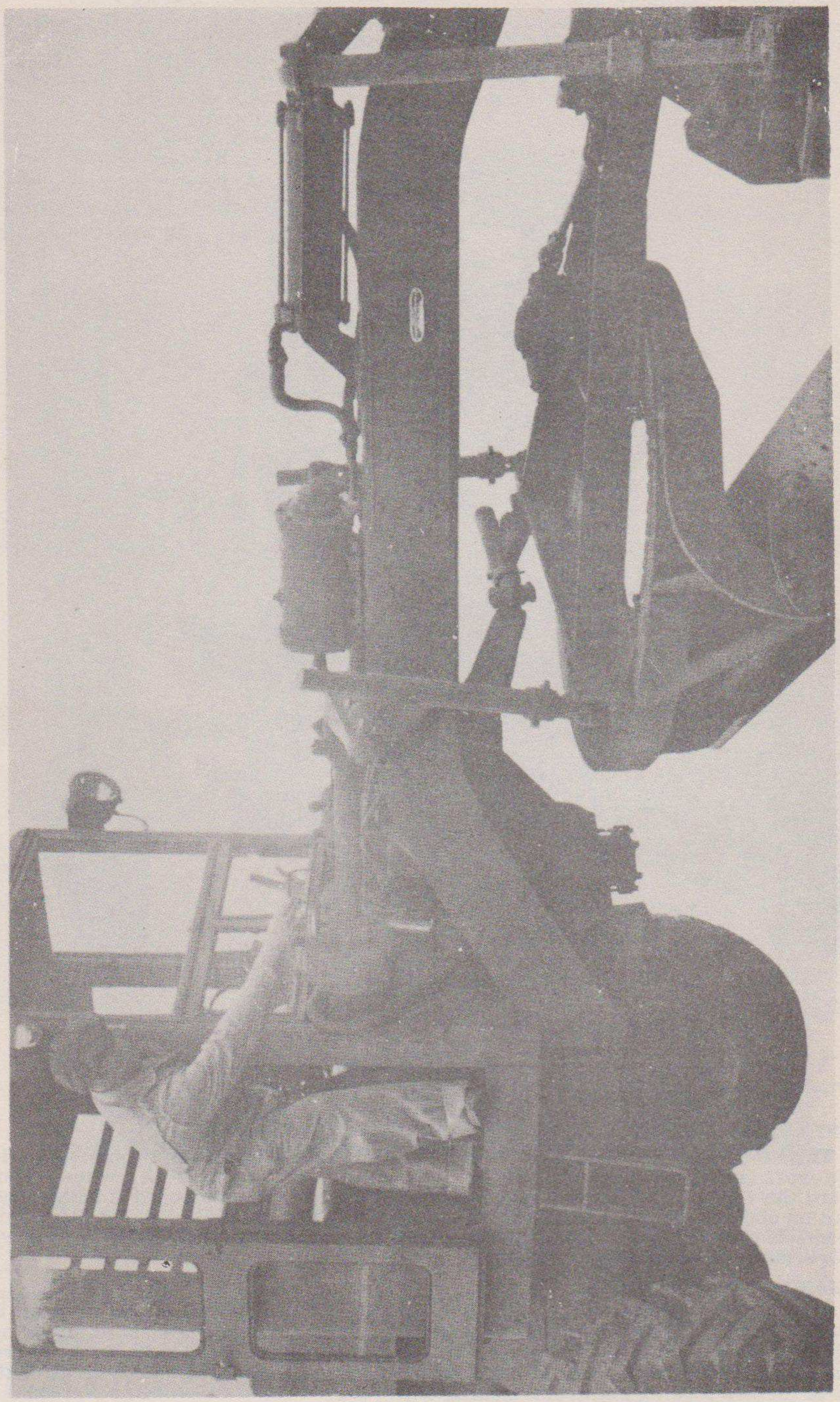

With point on ground to take load off lock pin, raise keeper and withdraw lock pin from lift shaft indexing turret. See above photo. Adding or relieving pressure by means of valve will aid in withdrawing lock pin.

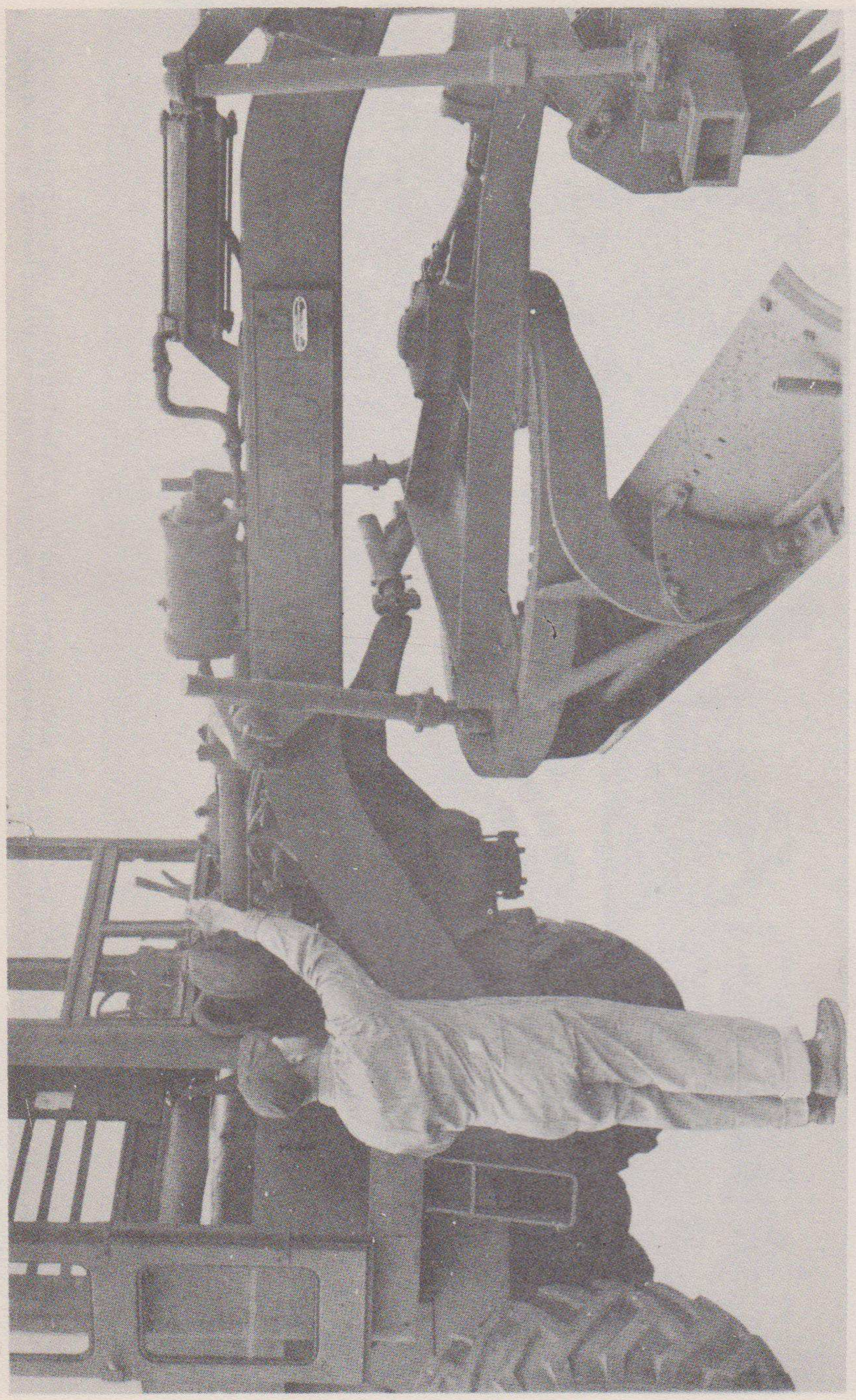

Now operate lift cylinder control valve raising cylinder piston to rotate turret to next hole and replace lock pin, as shown above.

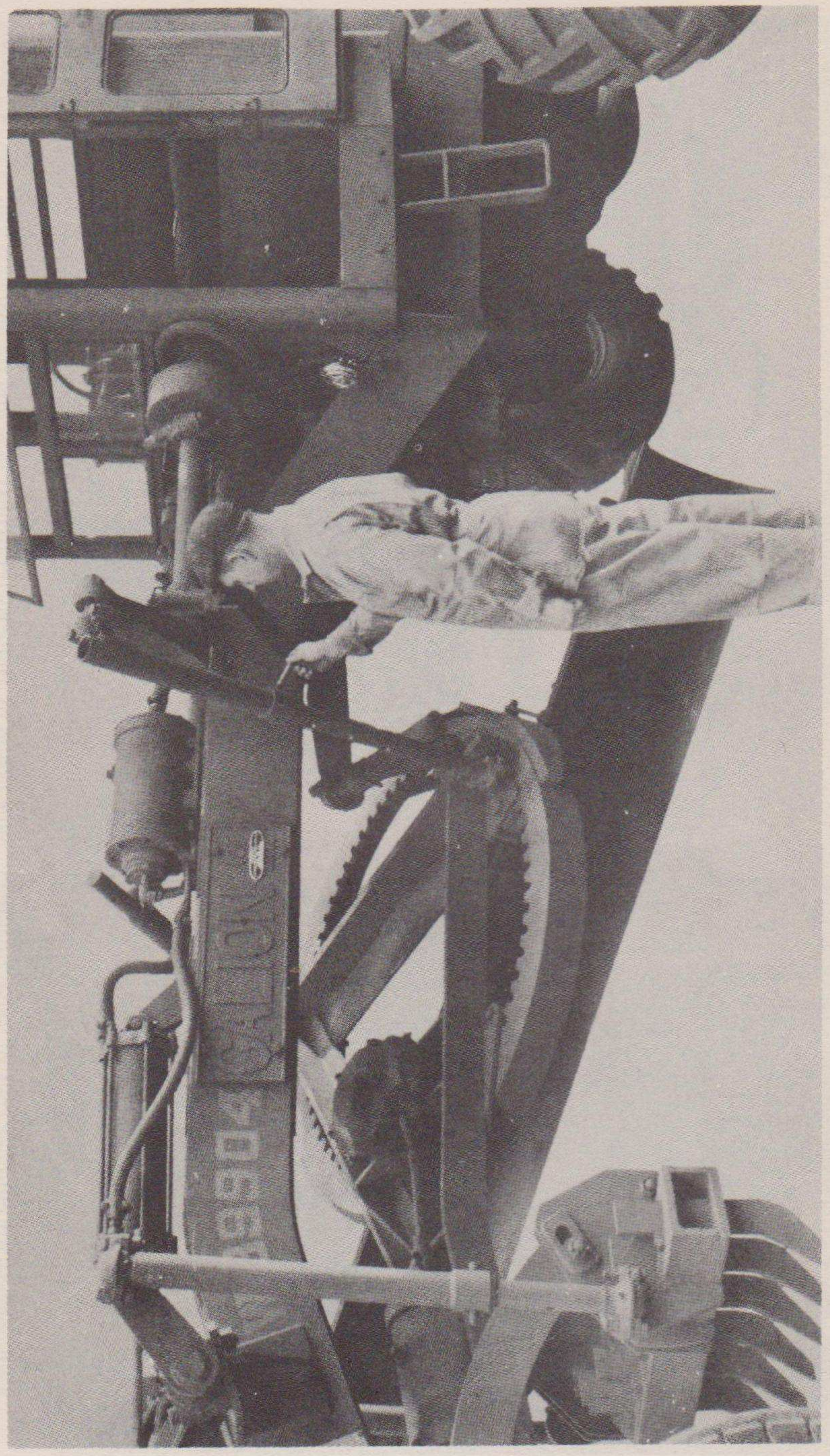

Raise point of moldboard and lower heel after side shifting circle slightly. With heel on ground the lock pin of telescope hand rod can be withdrawn and by operating lift control valve the hand rod can be lengthened to last locking hole and lock pin replaced. See photo above.

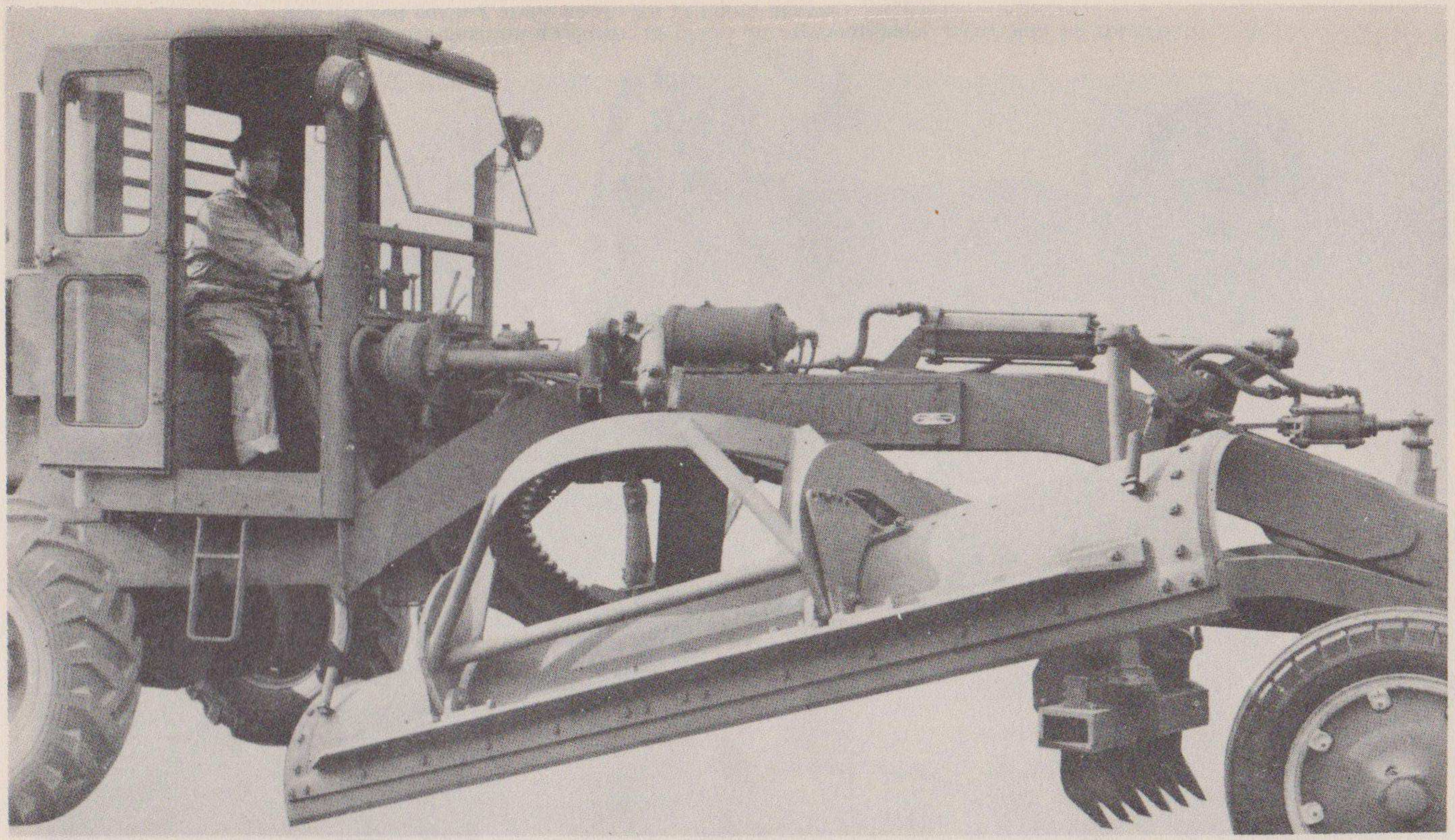

Now with heel raised just enough to clear ground surface, with point raised slightly, operate side shift at the same time making adjustments of right and left hand blade lifts necessary to permit operation of side shift to limit of throw. See above photo.

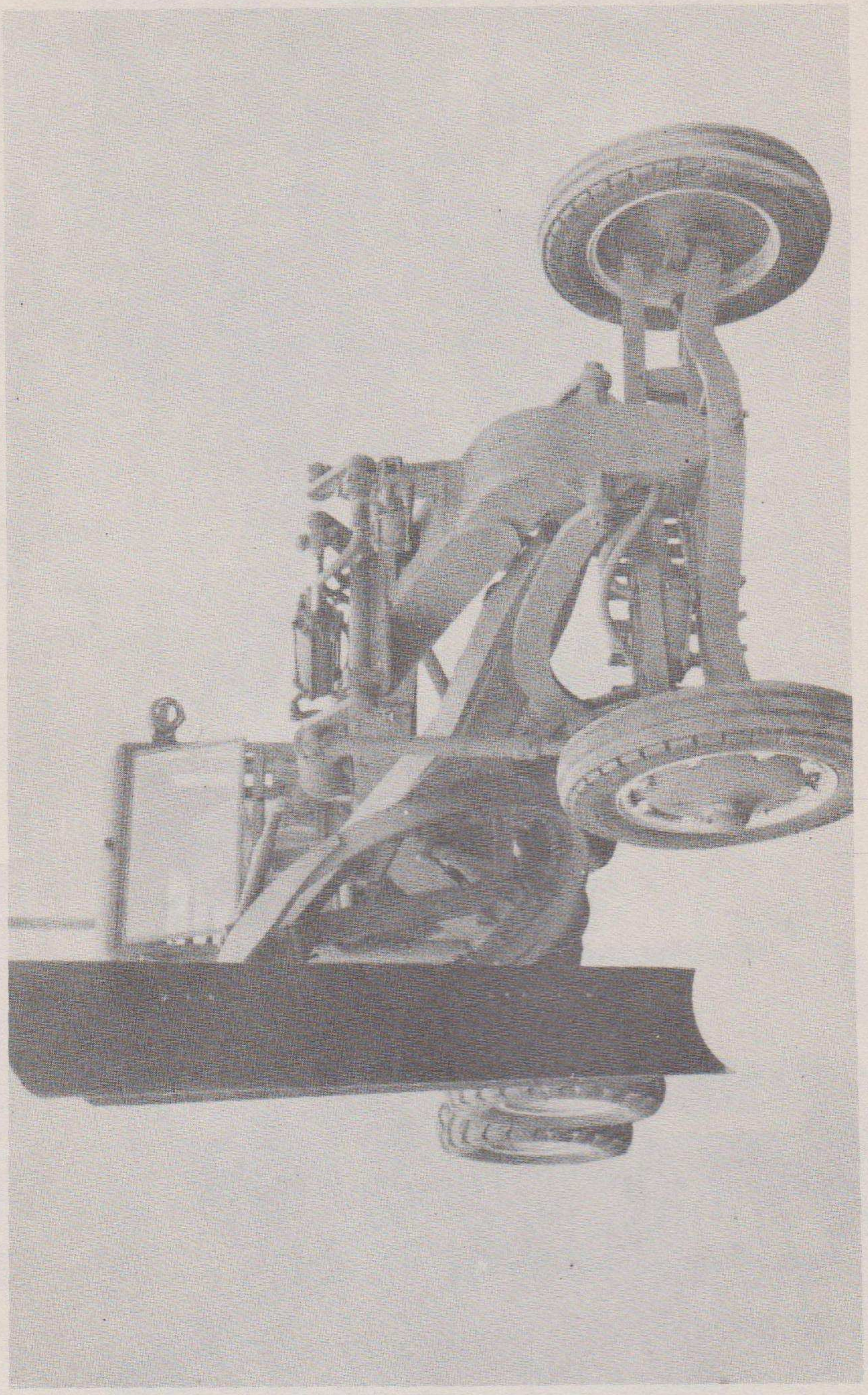

From the position as shown in photo on previous page, circle can be rotated to the desired cutting angle as shown in photo above.



Galion 101 Motor Grader in normal grading position for maintenance, etc.

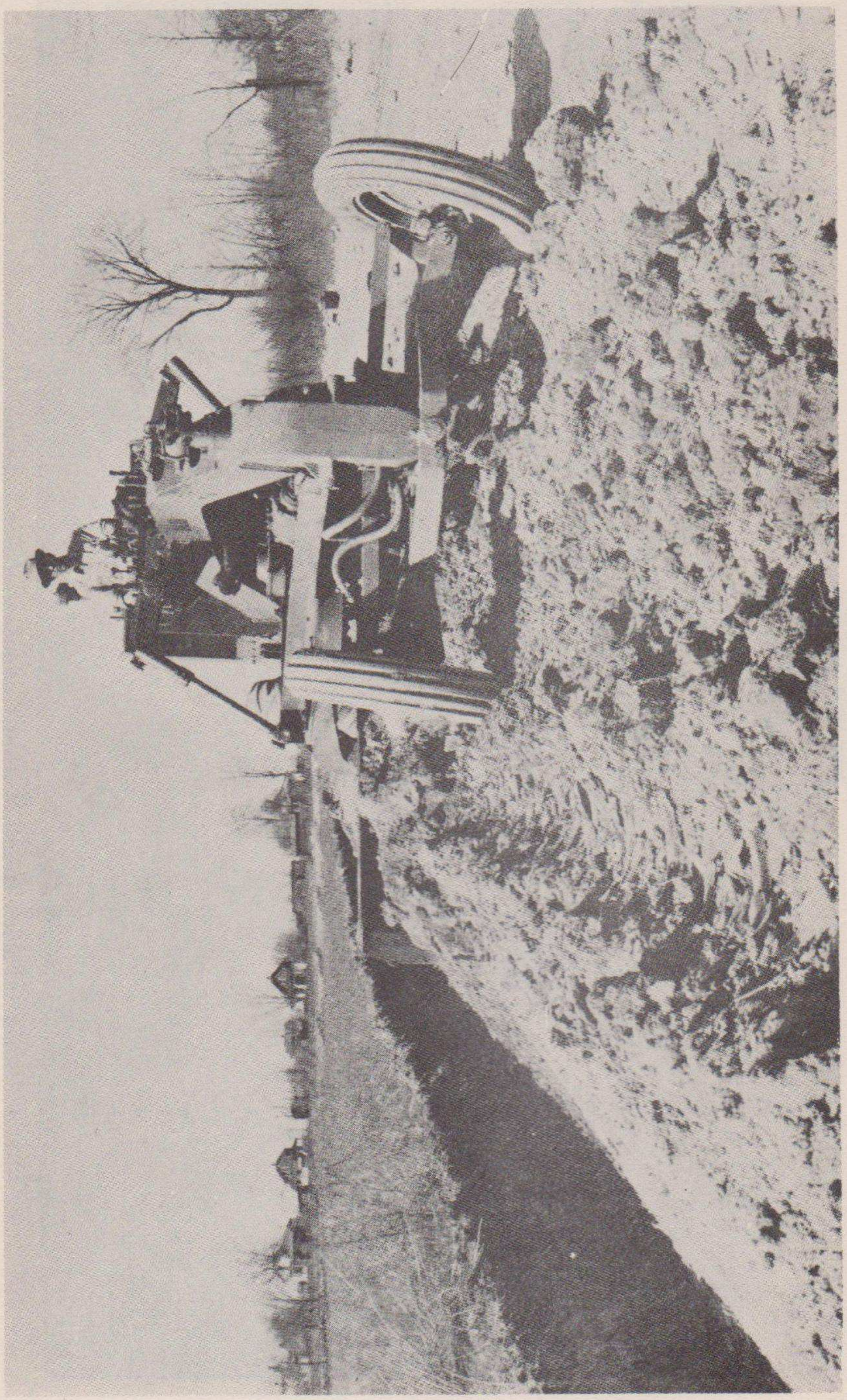

Grading with blade extended well outside of wheels without changing position of blade on circle knees.



Galion 101 Motor Grader in ditching position.

990620 O—52——2

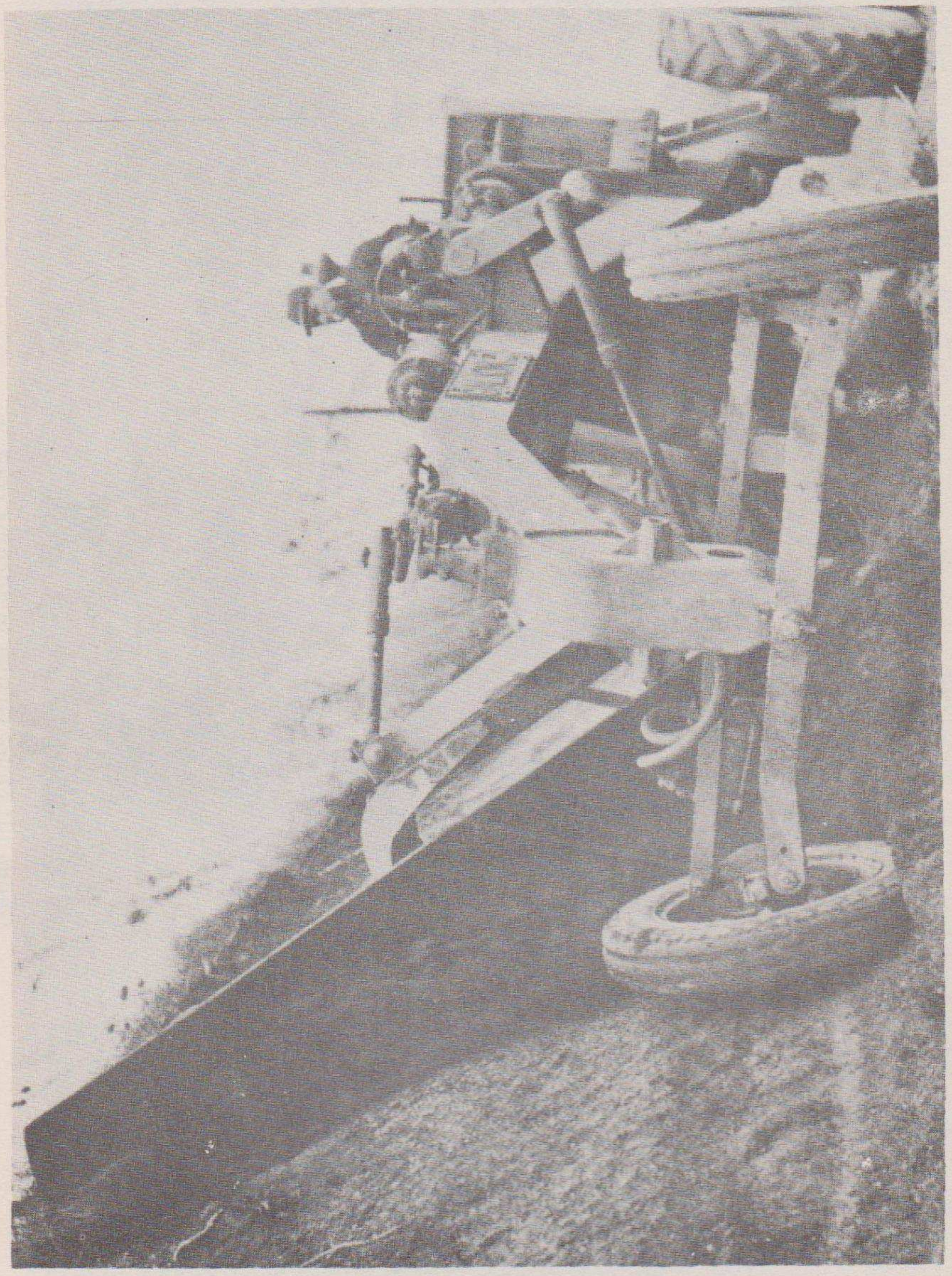

Blade is quickly adjustable for cutting banks up to 90° perpendicular.

INDEX

AIR CLEANING SYSTEM 7
ANTI-FREEZE 7
BEFORE STARTING A NEW POWER UNIT 2
BEFORE STARTING DIESEL ENGINES THAT HAVE BEEN IN STORAGE 24
BLEEDING FUEL SYSTEM WITH BOSCH PUMP 3
BLEEDING FUEL SYSTEM WITH I.H.C. PUMP 4
CARBURETOR 12
CHANGING TO DIESEL OPERATION 6
CLUTCH 21
COOLING SYSTEM 13
FUEL OIL SPECIFICATIONS 3
FUEL OIL WATER TRAP 8
FUEL OIL FILTER WITH BOSCH PUMP 11
FUEL OIL FILTER WITH I.H.C. PUMP 11
GASOLINE STRAINER 9
INJECTION PUMP TIMING 20
INJECTION NOZZLE 21
MAGNETO 15
MINOR ENGINE SERVICE OPERATIONS 18
OIL FILTER 10
REMOVING AND REPLACING INJECTION PUMP 19
SPARK PLUGS AND CABLES 15
STARTING ENGINE ON GASOLINE 3
STORING AND HOUSING DIESEL ENGINE 23
SUGGESTIONS FOR CHECKING TROUBLE 22
VALVE CLEARANCE ADJUSTMENT 18

BEFORE STARTING A NEW POWER UNIT

LUBRICATION

1. Lubricate entire Unit using "Lubrication Chart" as a guide.
2. Check the oil levels of engine crankcase, air cleaner, and fuel injection pump to see that they are filled to the correct levels with the proper grades of oil for the prevailing temperature *(refer to specifications of lubricants on the "Lubrication Chart")*.

ENGINE COOLING SYSTEM

(Water capacity is approximately 18 U. S. gallons.)

1. See that drain plug is tight in bottom of radiator and that crankcase drain cock (near fuel oil filter) is closed. Fill the radiator with clean water (use soft or rain water if possible). Never pour cold water into an empty system if engine is very hot as it may cause cylinder head of engine to crack.
2. When filling the radiator open the vent cock on side of thermostat housing and close it when water appears.
3. If the power unit is to be operated in freezing temperatures (32° F. or lower) refer to "Cold Weather Operations."

   For the most efficient operation the heat indicator needle *(see Fig. 1)* should point in the high side of the "Run" portion.



Fig. 1—Heat Indicator.

FUEL TANK AND FUEL LINES

Fill the gasoline tank with clean gasoline (capacity approximately 1½ U. S. gallons) and open gasoline shut-off valve.

SAFETY FIRST! Never fill the gasoline tank when near an open flame or when the engine is running. When pouring in fuel, keep funnel in contact with metal of tank to avoid the possibility of an electric spark igniting the gas. Do not light matches near gasoline as the air within a radius of several feet is permeated with a highly explosive vapor.

See that the vent in the gasoline tank filler cap is kept open at all times to insure proper flow of the fuel.

With a new unit, or in case fuel lines have been disturbed, disconnect fuel line from fuel supply pump to fuel supply strainer. Prime (or fill) the supply pump with fuel oil, then reconnect this pipe. Connect up fuel return line from small fuel tank return outlet to main fuel supply tank. Make sure small fuel oil tank (capacity approximately 1½ U. S. gallons) is filled with clean fuel oil before starting the engine.

Before starting a new engine, switch it over to low compression, (starting position), then remove the spark plugs and put about one teaspoonful of crankcase oil into each cylinder replace the spark plugs and crank the engine to distribute the oil over the cylinder walls. This assures positive lubrication of the cylinders and pistons immediately after starting and eliminates the possibility of scoring. Procedure outlined is only necessary for a new engine, or an engine that has been idle for a long time.

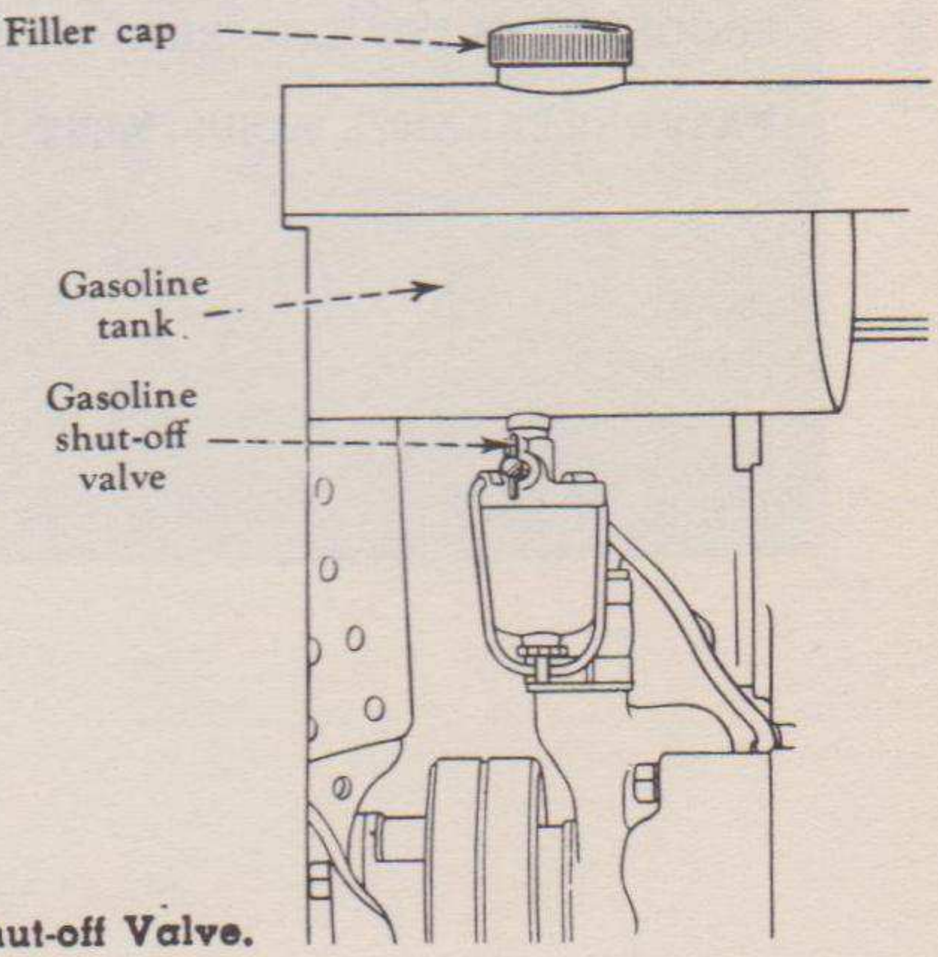

Fig. 2—Gasoline Tank and Shut-off Valve.

FUEL OIL SPECIFICATIONS—Do not use dirty fuel.

Gravity (minimum)	24° B.
Viscosity (Saybolt Universal) (at 100° F.)	Minimum 35 seconds. Maximum 100 seconds.
Sulphur (by weight)	Maximum 1.5%
Conradson Carbon	Maximum 1.0%
Flash Point	Minimum 150° F. or legal minimum.
Water and Sediment (by volume)	Maximum .5%
Pour point	Must be lower than minimum temperature at which fuel oil is to be used.
Distillation test	10% at 460° F. Maximum. 95% at 675° F. Maximum. End point 700° F. Maximum.

The supplier or distributor shall assume the responsibility of supplying a fuel oil of good ignition and burning qualities.

Do not use a lower grade of fuel than specified above.

The importance of using clean fuel oil cannot be over emphasized. Dirty fuel will cause rapid wear and clogging of fuel system, resulting in costly shut downs.

AVOID OVER-CHOKING

Excessive use of the choke and primer will flood the engine with gasoline and make it hard to start. Follow the choking and priming procedure outlined below:—

During warm weather, or when engine is warm, set choke valve lever approximately ⅓ open. No priming is necessary ordinarily.

During cold weather and when engine is cold, set choke valve lever nearly closed and prime engine with primer button.

In zero weather, give the engine 6 to 8 primes.

In temperatures 10° to 20° F., give engine 3 to 5 primes.

In temperatures 30° to 40° F., give engine 1 to 3 primes.

This range offers approximate priming requirements which can be varied to suit conditions. For full details on Cold Weather Starting and Operating.

After setting the choke valve lever and priming as indicated, step on the starter button.

STARTING ENGINE ON GASOLINE

Pull the compression release rod until release lever latches in the jaw on manifold side of engine *(see Fig. 4 and 4A.)*

Disengage the clutch.

Put the engine speed control lever in shut-off position. If this is not done, the engine will be flooded with fuel oil.

As soon as the engine starts, set choke to where engine runs without missing.

When engine is running, be sure that oil gauge on instrument panel indicates pressure. If it does not, stop the engine and inspect the oil system to find the cause of failure. If unable to find cause, be sure to consult a qualified serviceman.

Note: If you have difficulty in starting on gasoline in cold or damp weather, the spark plugs should be removed and wiped off to insure removal of all condensation.

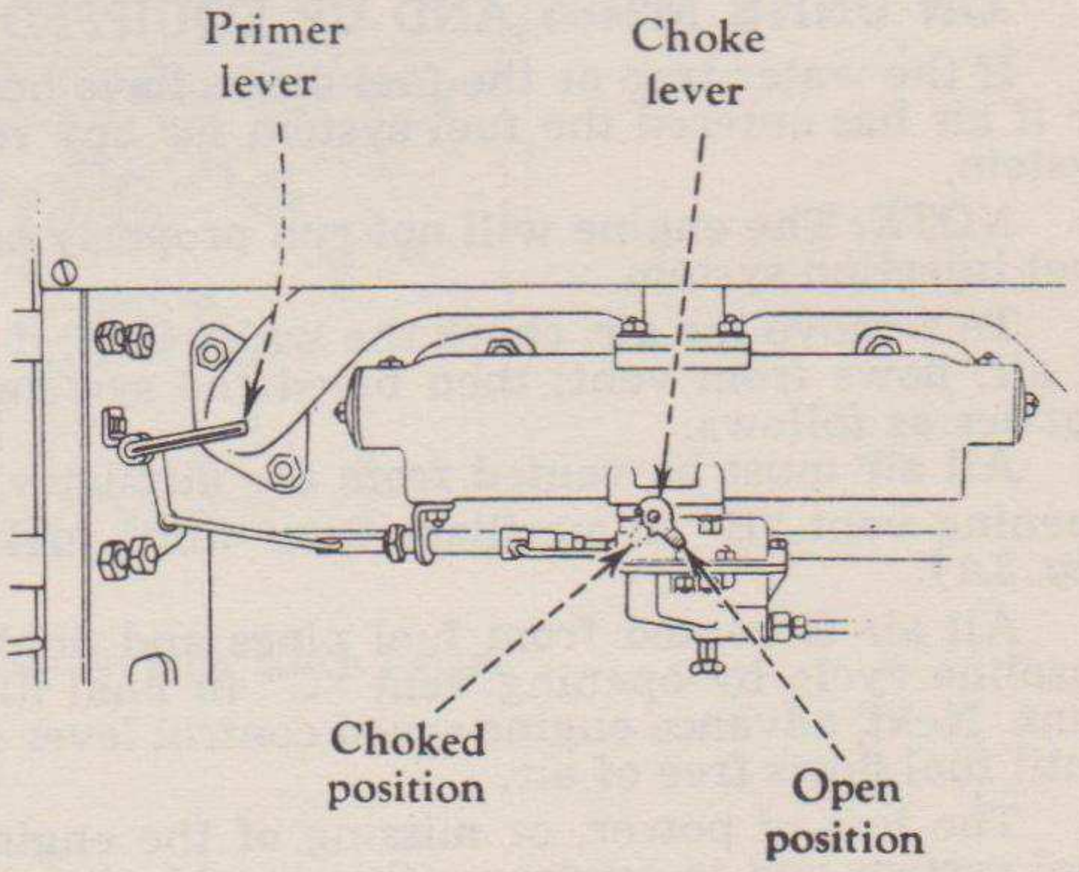

Fig. 5—Choke and Primer

CHANGING TO DIESEL OPERATION

After starting on gasoline and before turning over to Diesel, run engine with the choke wide open until the exhaust becomes clear (this will clean the spark plugs for the next starting). For *severe cold conditions* engine should be run two or three minutes on gasoline before switching to Diesel fuel and for moderate temperatures about one minute.

Push the compression release lever all the way toward engine (Diesel position), then immediately advance engine speed control lever part way and the engine should operate on fuel oil as a Diesel engine.

The carburetor is automatically cut out when on Diesel operation, and is ready for use again when starting on gasoline.

The magneto is timed with the engine and is permanently connected. The ground (cut-out) switch is operated automatically by the starting mechanism.

The engine may start noisily when Diesel operation begins, but the noise will be eliminated as the engine warms up.

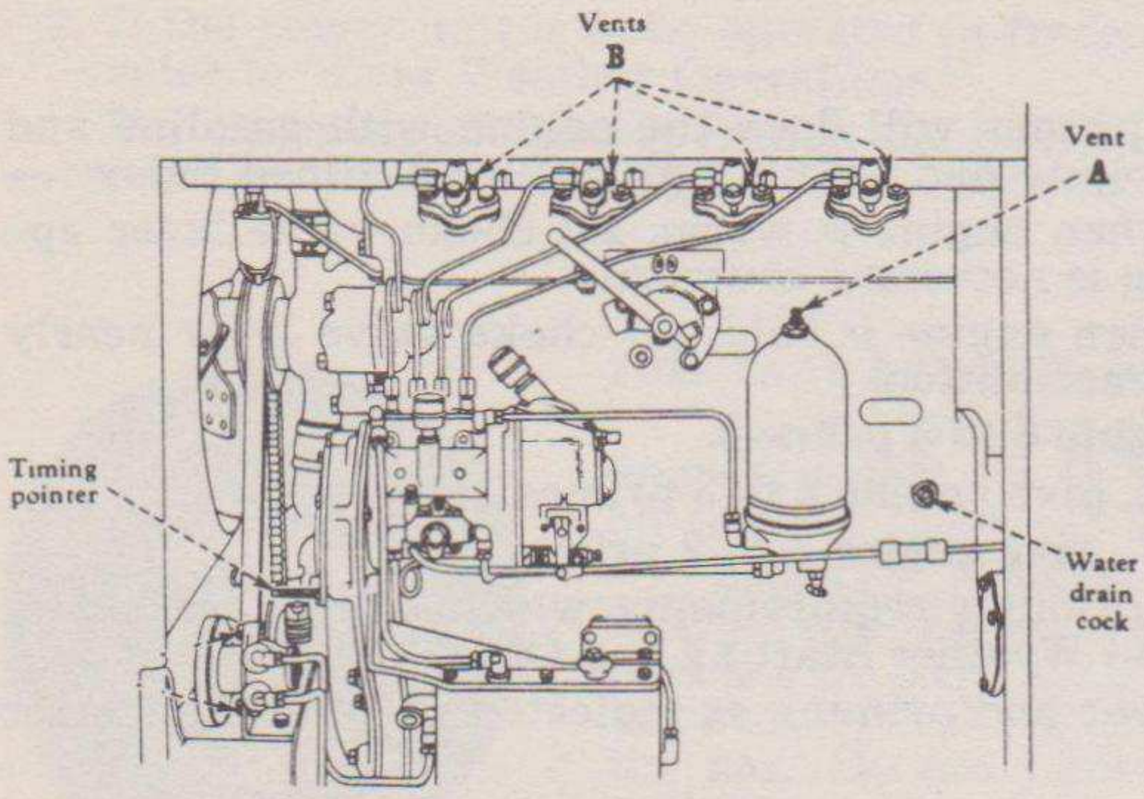

Fig. 3—Air Vents at Fuel Filter and Injection Pump Nozzles.

AIR VENTS AT INJECTION NOZZLES AND FUEL FILTER ON UNITS BELOW M3465 EQUIPPED WITH BOSCH INJECTION PUMP (See Fig. 3)

Note: The engine will fail to run on the Diesel cycle if there is any air in the fuel injection system.

To remove the air, it is necessary to bleed the system by opening the vent cocks successively on the fuel filter and injection nozzles.

Open the fuel filter vent cock "A"; then start the engine. Close the vent cock when fuel starts to flow. With the engine operating on the gasoline cycle, advance engine speed control lever slightly while venting fuel injection lines.

Open each nozzle vent cock "B" individually. Close each cock when the fuel starts to flow.

AIR VENTS AT INJECTION NOZZLES AND FUEL FILTERS (Fig. 3A) AS USED ON UNITS M3465 AND UP EQUIPPED WITH IHC INJECTION PUMP

If the water trap or the fuel filters have been drained, or fuel pipes disconnected, or if air has entered the fuel system for any reason, it will be necessary to vent the system.

NOTE: The engine will not run properly on Diesel cycle if there is any air in the fuel injection system.

To remove the air, check the water trap; if empty, open air vent A until fuel, free of air, flows from vent; then bleed the system by venting fuel filters and injection nozzles as follows:

All air must be vented from the auxiliary fuel filter before engine is started by opening vent "B" in auxiliary filter until fuel flows free of air from this vent *(see Fig. 3A)*.

All air is vented from fuel pipes and final filter after engine is running on the gasoline cycle by opening vent "C" in final filter until fuel, free of air, flows from vent. Next, advance engine speed control lever slightly and open each nozzle vent "D" until fuel flows free of air.

The loss of power, or missing of the engine, is frequently caused by air in the fuel system and to overcome this trouble it is only necessary to vent fuel system as described above.

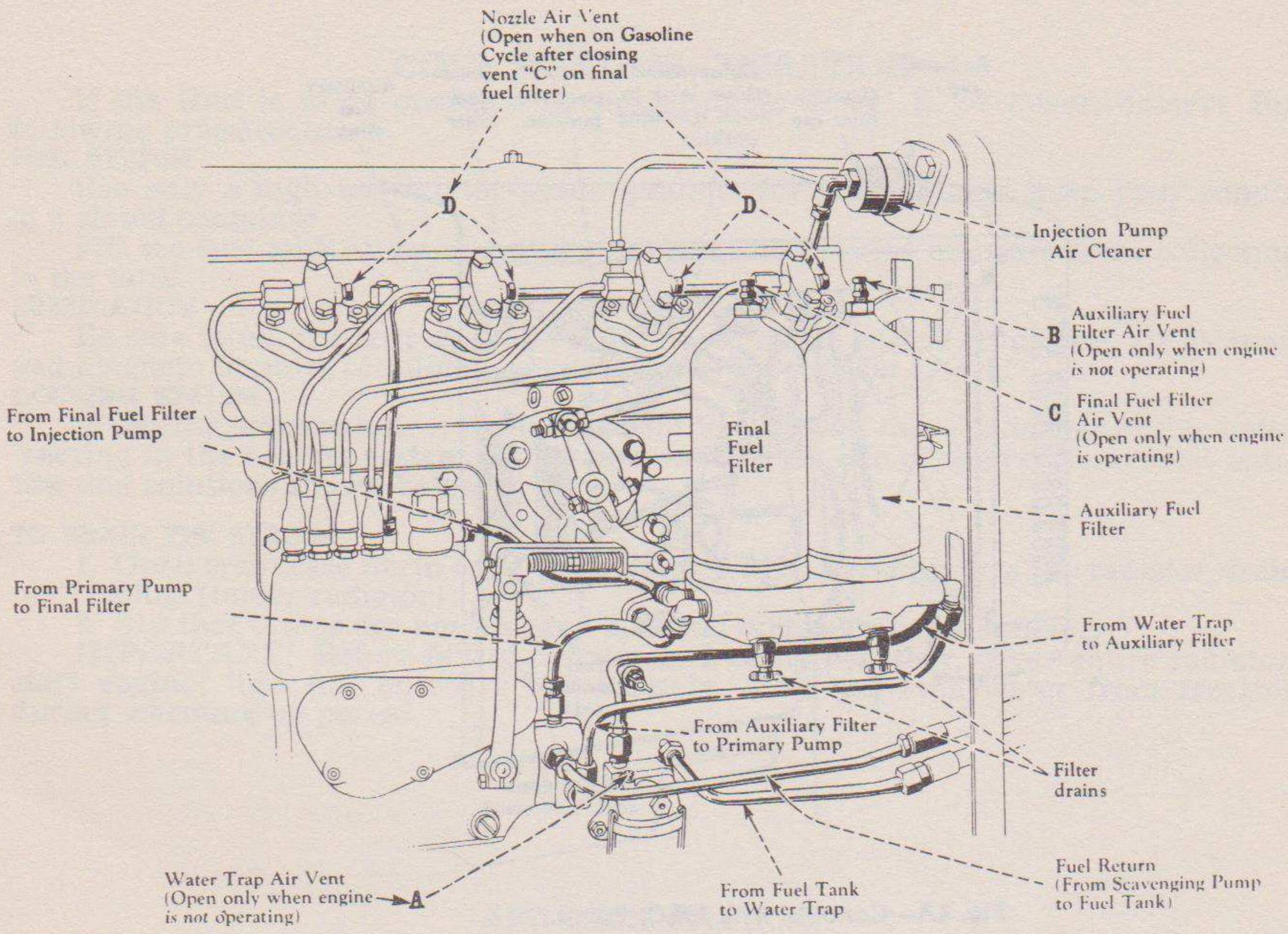

Fig. 3A—Air Vents at Fuel Filters and Injection Pump Nozzles with IHC Injection Pump.

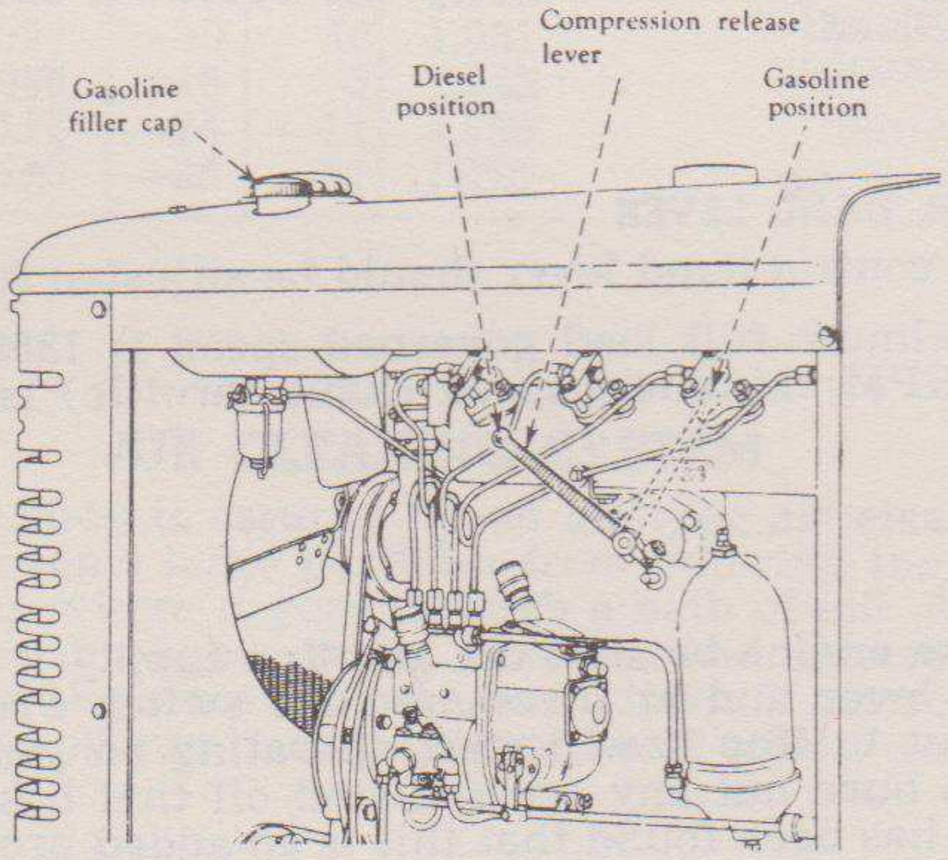

Fig. 4—Controls with Bosch Pump.

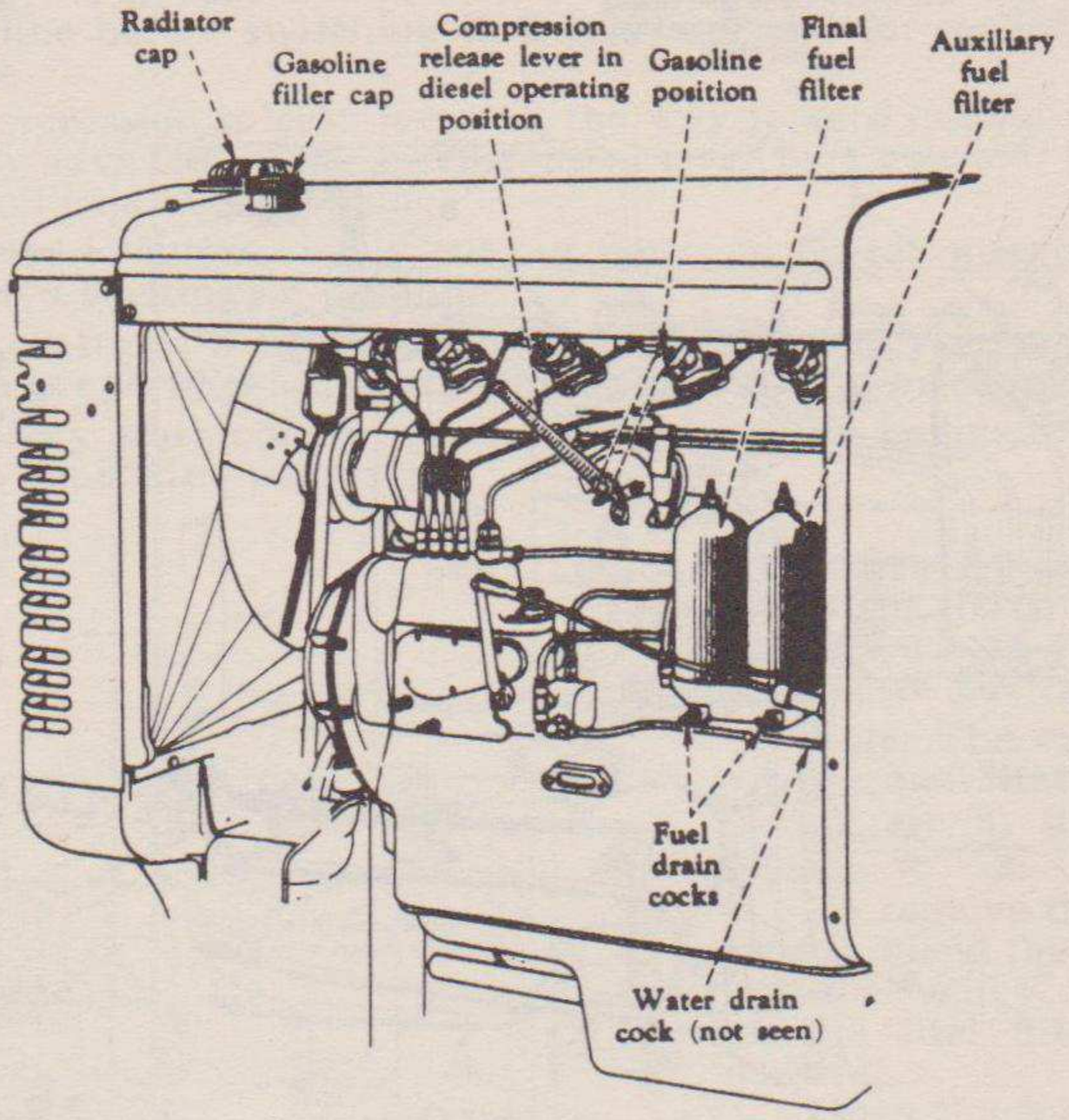

Fig. 4A—Controls with I.H.C. Pump.

GOVERNOR

The governor in this engine is an integral part of the fuel injection pump and is fully enclosed and sealed at the factory. It operates in a bath of oil and its function is to maintain the engine speed selected by the operator, and to automatically proportion the fuel to the load.

ENGINE SPEED CONTROL HAND LEVER

The engine speed control hand lever should be adjusted for load to be handled.

The rated or maximum full load governed speed is 1350 RPM; maximum idle speed is 1440 to 1490 RPM; minimum speed (hand throttle) is 400 to 450 RPM.

STOPPING THE ENGINE

When stopping the engine be sure the gasoline supply is turned on, then retard engine speed control lever and at the same time switch over to low compression. Just as engine is about to stop it will start operating on gasoline. Let it run long enough on gasoline to burn out any accumulated oil that has gathered in low compression chambers. It has been found that this is an added protection against starting failures.

As soon as the engine starts on gasoline, shut-off the gasoline fuel supply at the gasoline tank and allow engine to use up the fuel in carburetor. After engine stops on gasoline be sure to throw compression release lever over to high compression to permit starting valves to cool in their seats.

COLD WEATHER OPERATION

If the Unit is to be operated in temperatures of 32° F. or lower, observe the following precautions:

FUEL SYSTEM

Use only a high-test winter-grade gasoline for starting, and keep your supply in a closed container.

Fill the fuel tank at the end of the day's run to prevent moisture from collecting in the tank.

LUBRICATION

Be sure to use the correct grade of lubricant in the engine crankcase, air cleaner, and magneto impulse coupling *as specified on "Lubrication Chart."*

COOLING SYSTEM

When the temperature is likely to be 32° F. or lower, there is danger of the water freezing in the cooling system. To overcome this, use one of the recommended anti-freezing solutions shown below.

TO DRAIN THE SYSTEM

1. Open crankcase drain cock (near fuel oil filter) and remove the radiator drain plug (under radiator).
2. See that drains are not plugged and that water drains completely.

IMPORTANT! Before filling radiator in freezing weather, cover entire radiator, start engine; then put in water immediately. This prevents water from freezing during warming up period.

ANTI-FREEZE SOLUTIONS

Percent by Volume	Distilled Glycerine			Ethylene Glycol		
	Freezing Point °C	Freezing Point °F	Specific Gravity	Freezing Point °C	Freezing Point °F	Specific Gravity
0%	0	32	1.000	0	32	1.000
10%	—2	29	1.029	—3	26	1.016
20%	—6	21	1.057	—9	16	1.031
30%	—6	12	1.085	—16	3	1.045
40%	—18	0	1.112	—24	—11	1.058
50%	—26	—15	1.140	—35	—31	1.070

IMPORTANT! Alcohol should not be used as an anti-freeze solution as it will boil away at average operating temperatures.

Do not use a solution of calcium chloride or any alkaline solution as they are injurious to metal parts.

Water cooling system capacity is 18 U. S. gallons.

AIR CLEANING SYSTEM

Clean air for combustion is assured by an oil-type air cleaner. A heavy screen in the air intake cap prevents large particles from entering the air cleaner. The air then passes to the oil cup where it goes through a bath of oil. As the air rises to the intake manifold it passes through a series of oil-bathed screens and the fine dust is removed. As the oil from the screens works back down, it carries the dirt with it and settles in the oil cup. The oil cup must be cleaned and refilled regularly with new oil.

OIL CUP

Clean and refill the oil cup every day, or every 10 hours of operation (more frequently when operating under dusty conditions). Refill the oil cup to oil level bead with the same grade of oil used in the engine crankcase. Capacity of the oil cup is 5½ U. S. pints.

Before removing the oil cup, clean or wipe oil or grit from top bead of oil cup,

CLEANING THE GASOLINE STRAINER AND SEDIMENT BOWL

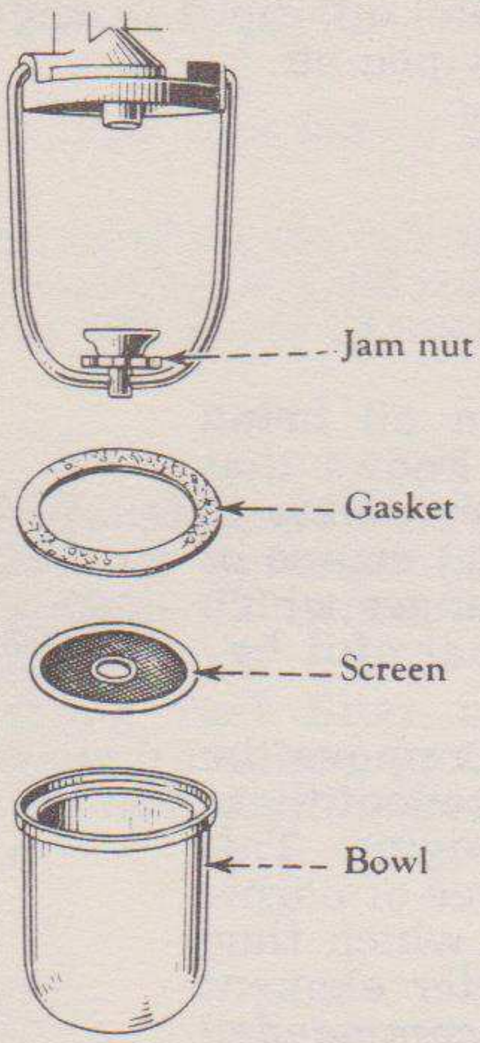

Fig. 7A—Gasoline Strainer showing Glass Bowl removed for cleaning.

The gasoline strainer, located under the gasoline tank, should be *cleaned at least once a month* when the Unit is in use. To clean the strainer close the gasoline shut-off valve and take the strainer apart by loosening the lower jam nut and disassembling the strainer. Clean the screen if necessary.

When reassembling the strainer be sure the cork gasket between the bowl and the main body is in good condition and does not leak.

GOVERNOR

The breather on the governor inspection cover should be removed and cleaned once a month, or more often if dusty conditions require it.

To clean the breather wash it in kerosene or fuel oil, dip it in engine lubricating oil and replace it after the excessive oil has been wiped off.

OIL FILTER

The life of your engine depends upon clean oil being circulated to all bearings. Every good operator knows that minute particles of abrasive matter eventually accumulate in the crankcase of the engine, and that in the normal course of engine operation, the lubricating oil undergoes changes which produce sludge, acids, gums, varnish, and other harmful by-products.

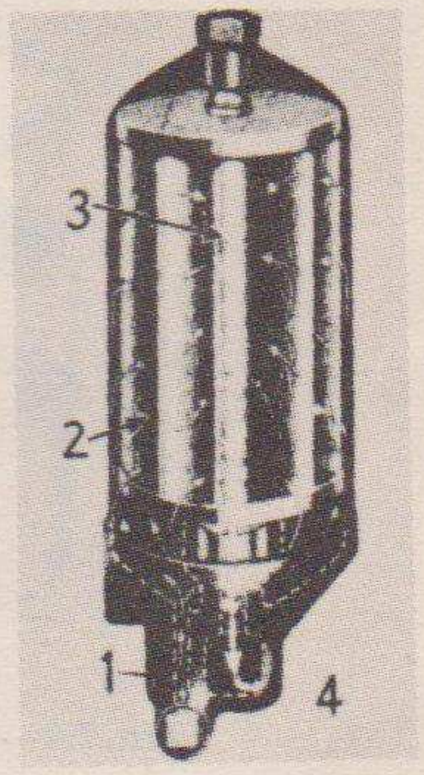

The purpose of the oil filter is to separate and remove the dirt and other foreign substances from the oil to prevent these injurious materials from being circulated to the engine. This filter is so efficient it will keep the circulating oil free of harmful contaminations for 100 hours of operation—at which time the oil should be changed and the inexpensive filter element replaced. *Refer to "Lubrication Chart" for the recommended oil to use for the prevailing temperature.* Close adherence to the simple, common-sense procedure for keeping dirt and oil impurities away from precision-made engine parts will safeguard your engine against undue wear and the operating troubles and upkeep expense which are a natural result of that condition.

TO CHANGE FILTER ELEMENT

1. Stop the engine.
2. Remove oil filter base drain plug and allow the oil filter to drain completely.
3. Clean off the filter case to eliminate any possibility of dirt dropping into the base.
4. Unscrew and remove the retaining bar "A".
5. Lift up and remove case "B".
6. Remove the old element "C".

NOTE: If some special equipment on the unit prevents the lifting of case "B" over element "C", remove the case and the element together.

7. Wipe out base and the case with a cloth dampened with kerosene.
8. See that the case gasket "D" is in position. Replace the drain plug in the filter base and install the new filter element (large pilot "E" must be down). Replace the case and retaining bar "A" and draw the nut up tight.
9. Check the oil level in crankcase to see that the new oil is up to the proper level *(see "Lubrication Chart")*. Now start up the engine, see that oil pressure indicator is registering pressure and inspect the filter for oil leaks.

Fig. 9A—Detail of Oil Filter Disassembled.

FUEL OIL FILTER

As used with Bosch Injection Pump Unit below Grader Serial M-3465

(Combination Cloth and Metal Elements)

The fuel oil filter on the left side of the engine should be cleaned regularly after every 100 hours of operation.

CLEANING

Remove case studs and case, then remove the elements and wash both the metal and cloth elements with kerosene or fuel oil.

After cleaning fuel filter elements, vent the air from the injection system before operating on the Diesel Cycle.

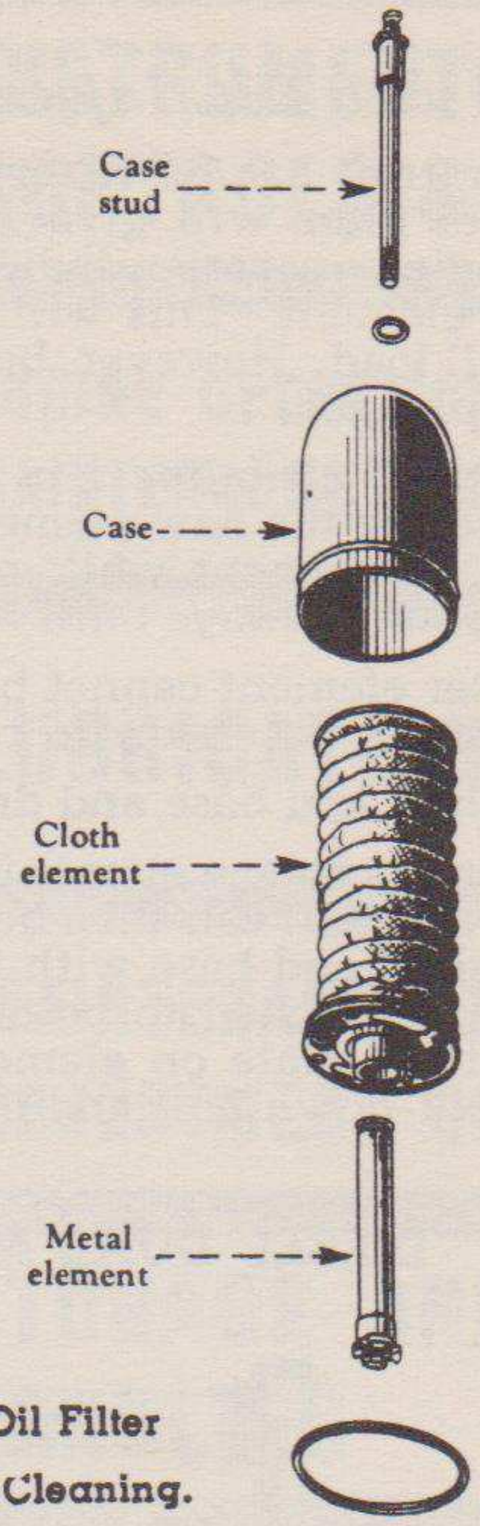

Fig. 10—Fuel Oil Filter Taken Apart for Cleaning.

AUXILIARY FUEL FILTER

As used with IHC Injection Pump on Grader Serial M-3465 and up

This filter element cannot be cleaned and, therefore, must not be disturbed except when it becomes necessary to replace element. It will have to be replaced whenever it becomes plugged. This will be indicated by a loss in power, or by the engine missing at full load, because of restricted fuel flow to engine. Also, the need for frequent venting of the final fuel filter indicates the auxiliary fuel filter has become plugged, assuming all fuel lines are tight.

The life of the auxiliary fuel filter under normal operating conditions will be approximately 1000 hours. Under normal operating conditions it is assumed that the air and water trap has been properly serviced to prevent water reaching this filter, and the fuel used was per International Harvester specifications. It should be clearly understood that the life of this element will be greatly reduced if water reaches it because of not servicing, or too infrequent servicing of the air and water trap. Another cause of failure would be the use of fuels not within International Harvester specifications, which have a high gum or residue content.

The need for cleanliness in making this installation cannot be over-emphasized. Also, in handling the new element, care should be exercised in preventing dirt, water, etc., getting on element while making this installation. *We advise leaving new element in original package until ready to install.*

Clean shell and base and drain the base of all fuel before removing element. To remove element, unscrew hold-down bolt and lift both shell and bolt from filter base. Remove old element and top and bottom adapters. Rinse the inside of shell, and also clean the filter base thoroughly with two changes of clean kerosene or fuel oil. Install adapters on new filter element, being certain they slide into wire coil on inside of element, and that the top adapter has the face stamped "top" on the top. Replace old gasket on bottom adapter with the new one and install element in base. Replace shell and hold-down bolt and draw shell down tight.

It is advisable to check auxiliary fuel filter at drain cock for traces of water at regular intervals. If water is found, it clearly indicates that more frequent servicing of the air and water trap is essential to obtain the required life of the auxiliary fuel filter element.

FINAL FUEL FILTER

As used with IHC Injection Pump on Grader Serial M-3465 and up

If water trap has been serviced and auxiliary fuel filter replaced, as specified, the final fuel filter will give satisfactory service almost indefinitely. However, if impaired engine operation indicates filter has become plugged it will be necessary to replace the element. This will be indicated by a loss in power and missing of the engine at full load. However, before changing final filter element, be certain auxiliary filter is not plugged.

The need of cleanliness in making this installation cannot be over-emphasized. Also, in handling the new element, care should be exercised in preventing dirt, water, etc., getting on element while making this installation. *We advise leaving new element in original package until ready to install.*

This filter element cannot be cleaned and, therefore, must not be disturbed except when it becomes necessary to replace element.

Clean shell and base and drain the base of all fuel before removing element.

In order to replace element, unscrew hold-down bolt and lift shell and bolt from filter base. Element can then be removed. Open drain cock and thoroughly clean and rinse filter shell and base with two changes of clean kerosene or fuel oil. Be certain that gasket is attached to bottom plate of new element. This gasket acts as a seal between bottom plate on element and filter base. Install new element, replace the shell and hold-down bolt and draw down tight.

DIESEL DUAL MANIFOLD STARTING CARBURETOR

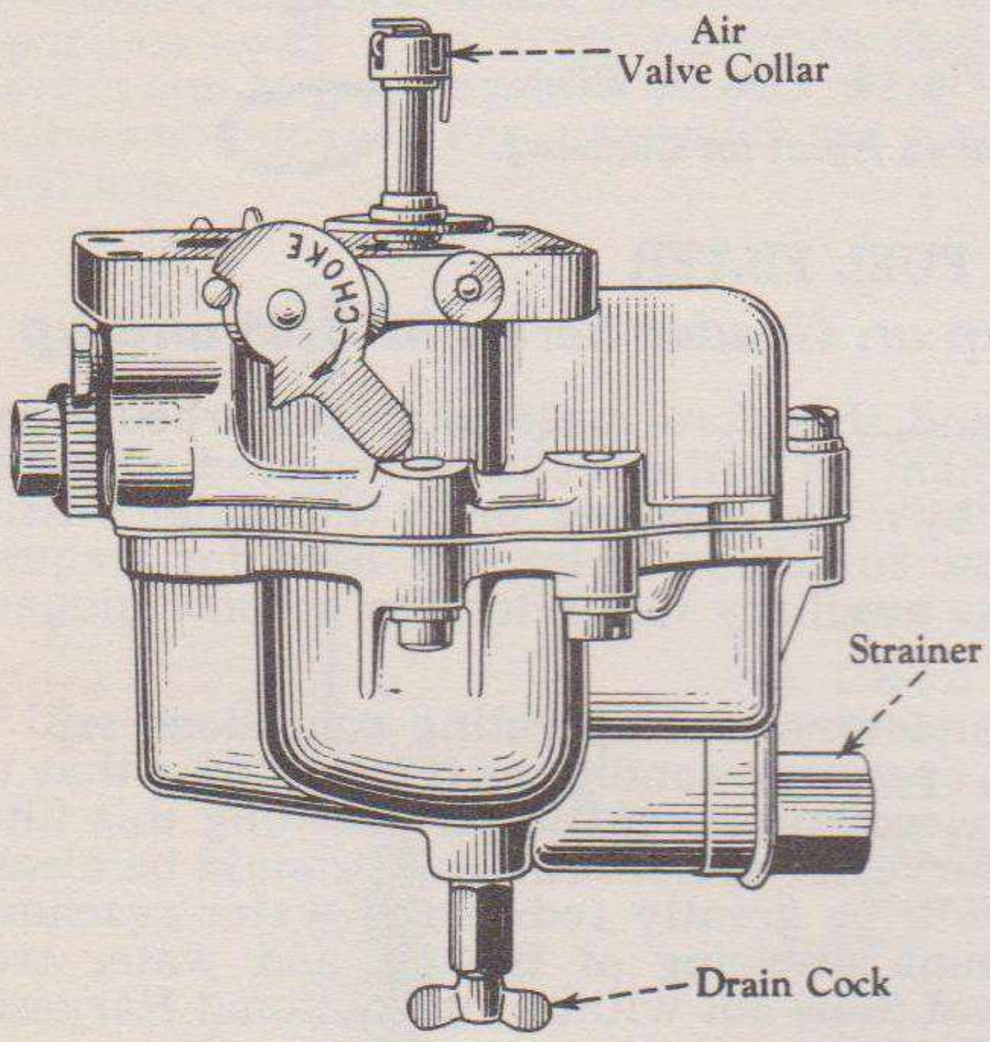

Fig. 11—Starting Carburetor.

The Diesel Dual Manifold Starting Carburetor is used only when starting the engine. The gasoline level is controlled by a conventional float and float valve mechanism when starting and running on gasoline. The float valve is locked into its seat, shutting off gasoline to fuel bowl when engine is changed over to operate on Diesel.

The float valve is protected against dirt and foreign material by a strainer. This strainer should be removed occasionally and cleaned.

NOTE: Periodically, check the screw fastening the fuel bowl to fuel bowl cover and see that cover screws are kept tight to prevent any leakage of air past the fuel bowl cover gasket.

TO CLEAN STRAINER

Close gasoline shut-off valve at gasoline tank.

Disconnect gasoline pipe at carburetor.

Unscrew strainer fitting from carburetor, wash off in kerosene and reassemble.

Open gasoline shut-off valve.

ADJUSTMENT

The speed of the engine, when operating on gasoline, is controlled by the amount of opening of the air valve. The maximum valve opening is set by adjustment of the air valve collar. This opening should be 9/64".

The starting choke regulates the air for starting.

CAUTION: Present day grade of gasoline has a tendency to form gum. Therefore, it is necessary that gasoline tank and fuel bowl be completely drained of fuel when engine is to be out of service for more than two weeks.

These gum deposits can be completely dissolved with a mixture of one part alcohol and one part benzol, or with acetone.

COOLING SYSTEM

The water is circulated through the engine block, cylinder head and radiator by a positive centrifugal pump. Water temperature is controlled by a thermostat that does not allow the water to flow through the radiator until the engine has reached operating temperature. At this temperature the heat indicator needle (*see Fig.* 1) will point in the high side of the "Run" portion. With thermostat closed, water circulates only through the engine.

TO CLEAN OUT DIRT AND SLUDGE

1. Drain the cooling system by removing the radiator drain and opening the crankcase drain cock (*see Fig.* 3). Allow the system to drain and replace the plug and close the drain cock.
2. Fill the cooling system with a solution of 6 to 7 pounds of ordinary washing soda mixed with 18 U. S. gallons of water (cooling system capacity.)
3. Leave the radiator filler cap off and run the engine until the water is hot, then drain and flush with clean water.

RADIATOR CORE

Overheating is often caused by bent or clogged radiator fins. If the spaces between radiator fins become clogged, clean them with an air or water hose. When straightening bent fins be careful not to injure tubes or break the bond between fins and tubes.

FAN BELT TENSION

The slack of the fan belt should be checked frequently to assure maintenance of the correct tension. The tension is correct when the belt can be depressed without effort by the thumb, approximately ¾" to 1" midway between the two pulleys *as shown in Fig.* 12. If the slack is more than 1", adjust belt as follows:

ADJUSTING THE BELT

The tension of the fan belt is adjusted by changing the width of the groove in fan pulley. To adjust, loosen set screw (2) (*Fig.* 13), then screw pulley flange (1) in toward belt to tighten the belt, and out to loosen it. Retighten set screw (2) after the correct tension is obtained.

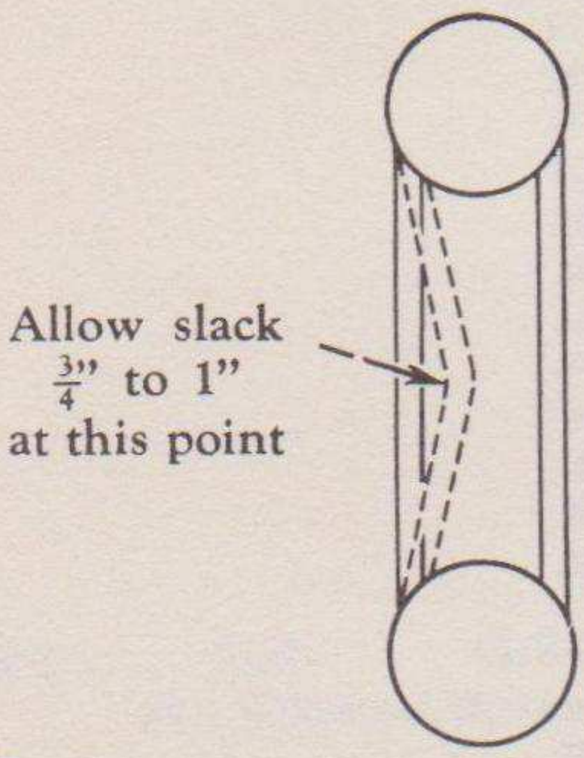

Fig. 12—Correct Belt Tension.

After a new belt has been run approximately 50 hours, check the tension and adjust again if necessary.

The belt should at no time contact the bottom of the pulley groove because this will wear it out rapidly. Adjust the pulley for a narrower groove, if this is possible without increasing the tension more than allowable. Having "V" belts tighter than the tension specified, will result in rapid wear.

REMOVING THE FAN BELT (See Fig. 13)

To remove fan belt, loosen screw (2) in flange on fan pulley and unscrew flange as far as possible. Start belt over outer flange of lower pulley and pry it out with light bar or rod. Slowly crank the engine at the same time and belt will work off pulley. After the belt is off the pulley, remove the starting crank. Belt can now be worked over top of fan blades.

REPLACING FAN BELT

The fan belt should be replaced when it becomes soaked with grease, or when it is so badly worn that it does not drive the fan at the proper speed.

When replacing the belt, reverse the procedure outlined under "Removing Fan Belt" *on page* 13, except that belt can be started on lower pulley by hand, and by slowly cranking the engine, belt will find the correct position.

WATER PUMP PACKING

The pump packing may leak due to wear after considerable service. If this occurs, tighten up the packing nut (3) (*see Fig.* 13) just enough to stop the leaking.

To install new packing, remove driver pin (5) and driver (6). Unscrew and remove packing nut (3). Place water pump packing around shaft and reassemble packing nut, driver and driver pin.

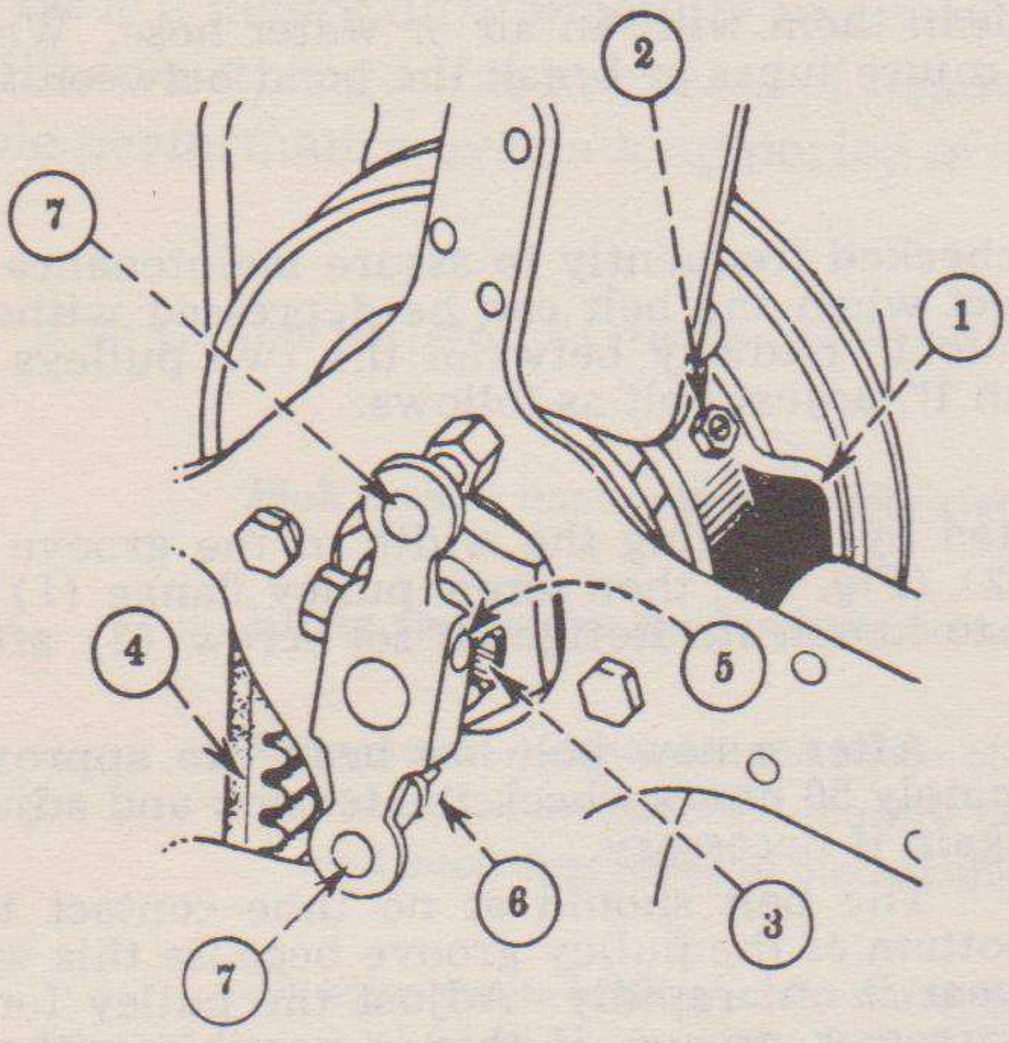

Ref. No.	Description
1	Fan pulley flange.
2	Set screw in pulley flange.
3	Water pump packing nut.
4	Fan belt.
5	Driver pin.
6	Driver.
7	Stud.

Fig. 13

SPARK PLUGS AND CABLES (USED FOR STARTING ONLY)

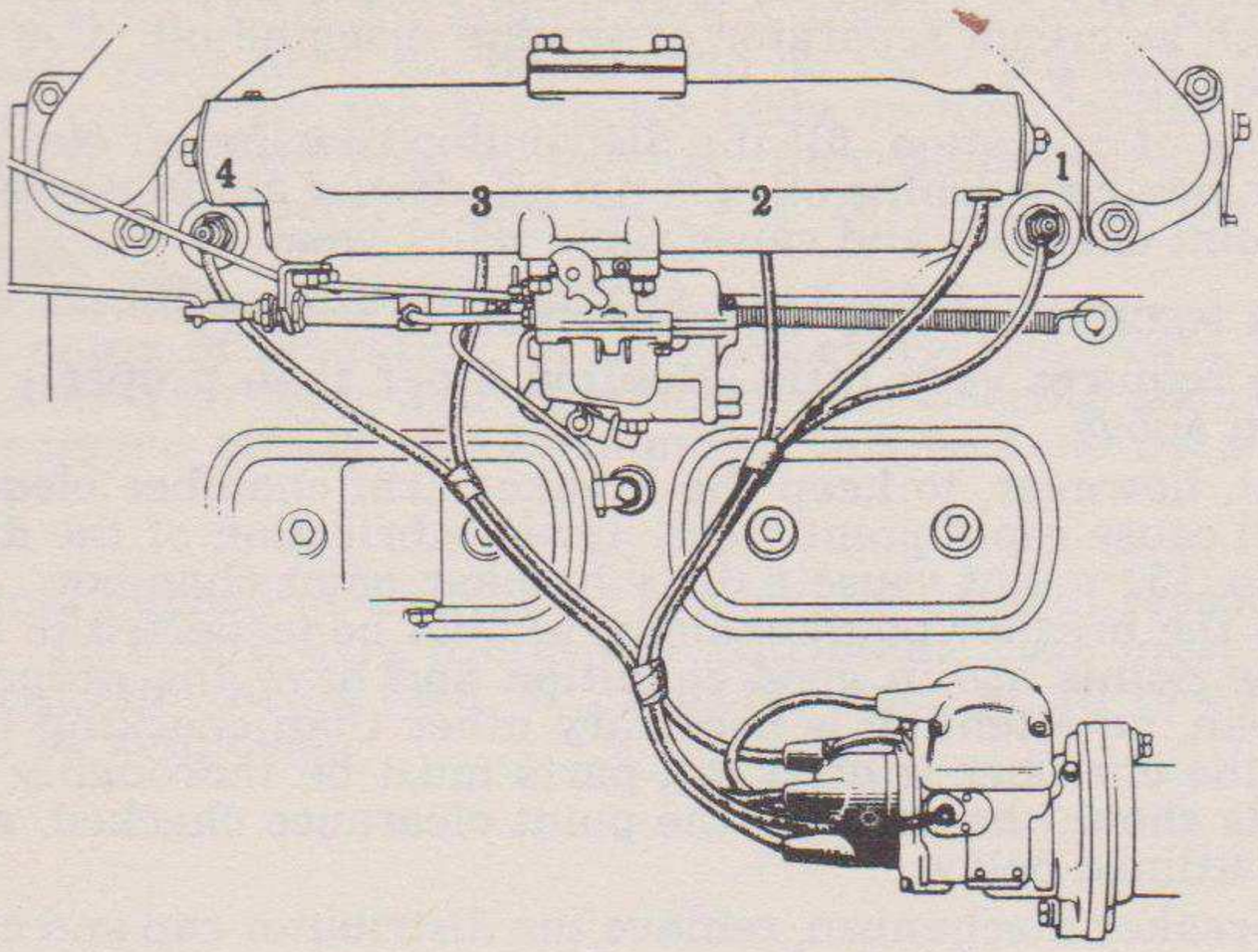

Fig. 14—H-4 Magneto—Wiring Chart. Engine firing order is 1, 3, 4, 2.

SPARK PLUGS

The spark plugs selected after careful tests as best suited for this engine are the Champion No. 44 or AC No. 18 and should be used ordinarily. Use only a complete set of either type of spark plug.

Spark plugs should be removed every 200 to 300 hours of operation, or oftener if necessary, for cleaning and checking gaps between electrodes. A gap of .035" to .040" should be maintained (a gauge of this thickness is furnished.) When making this adjustment, always bend the outer electrode. Never bend the center electrode as it may damage the insulator. If the gap between the electrodes is too great, due to improper setting or burning off the ends, engine will misfire and be hard to start.

CLEANING SPARK PLUGS

Sand blasting is the recommended method of cleaning spark plugs. Never scrape or clean the insulator with anything which will scratch the porcelain. Scratched porcelain allows carbon and dirt to accumulate much faster.

SPARK PLUG CABLES

If spark plug cables are removed for any reason, note the position of each cable on magneto. (*Wiring Chart—Fig. 14 shows correct wiring.*)

There should be ¼" minimum clearance between spark plug cables and cylinder head. By maintaining this clearance, shorting-out the spark plug will be prevented and the cable will be away from the extreme heat of the cylinder head. If the cable touches the head, heat soon causes the rubber to become soft and ruins the cable.

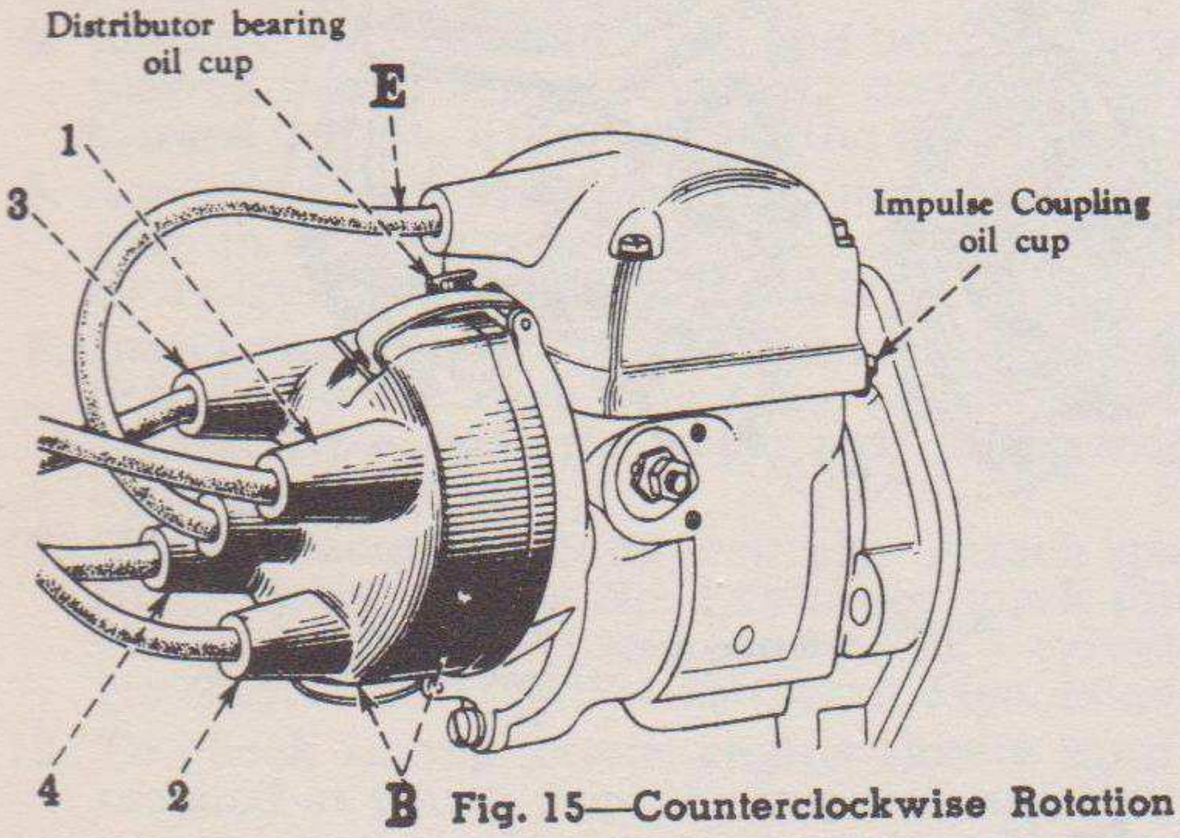

Fig. 15—Counterclockwise Rotation (viewed from the distributor end).

MAGNETO

Your unit is equipped with a high-tension magneto which is designed and built in accordance with the latest ignition practices. A magneto of this type is used by International Harvester because our engineers have proved that it is superior from the standpoint of performance, long life, and trouble-free operation.

The magneto is permanently engaged, but when unit is operating on the Diesel Cycle, spark is eliminated by means of an automatic ground (cut-out) switch.

LUBRICATION

Every week, or every 60 hours of operation, oil the impulse coupling liberally with a light oil such as cream separator or sewing machine oil. Use kerosene when temperature is below 10° F.

Every 500 hours of operation, fill the distributor bearing oil cup with very light cream separator or sewing machine oil. Do not oil oftener as excessive oil might work into the breaker point chamber and cause rapid point wear.

GREASING BREAKER MECHANISM AND CHECKING POINTS

Your magneto requires very little attention other than properly lubricating the oil cups as specified above.

It is important, however, to keep the breaker arm chamber clean, as oil on the breaker points will cause rapid point wear. Over-lubrication of the distributor bearing oil cup *(see Fig. 15)* might cause a dirty breaker point chamber. After every 250 hours of operation the breaker point chamber should be inspected to assure that it is clean. See that the points are in good condition and have the proper clearance. If the chamber is clean, no attention is necessary other than checking the clearance of the points; but if the chamber is dirty, all parts must be thoroughly cleaned. After cleaning, the points should be dressed, the point clearance checked, and the breaker arm regreased as outlined below.

To reach the breaker mechanism, remove the distributor cap and crank the engine slowly until metal strip on distributor rotor points toward the No. 1 terminal on distributor cap and impulse coupling just trips. Remove the distributor rotor. Take off the distributor body by removing the three screws *(see "A", Fig. 16)*. Do not crank the engine while distributor body is removed or it might be necessary to retime the magneto to the engine.

Pry the breaker arm and anchor from the chamber and clean all parts. Inspect the breaker points and if necessary, dress them with a sharp fine file. If the points are worn excessively, replace both points.

Fill the recess in breaker post with grease and pack a small quantity of magneto grease in back of the breaker arm rubbing block (*see Figs.* 16 *and* 17.)

Assemble the breaker arm, leaving the spring anchor projecting ⅛ to $\frac{3}{16}$" above top of slot so it is pushed into place by distributor body. Be sure the points line up after breaker arm is pushed into place.

Check the gap between the breaker points using the gauge furnished with the unit (*see Fig.* 17). The point opening should be .013" when the rubbing block is on the high part of the cam. If gap is not correct, adjust it by loosening the screw holding the adjustable point (*see Fig.* 17) and moving the point up or down until gauge slips snugly into opening. After the proper adjustment has been made, tighten the screw.

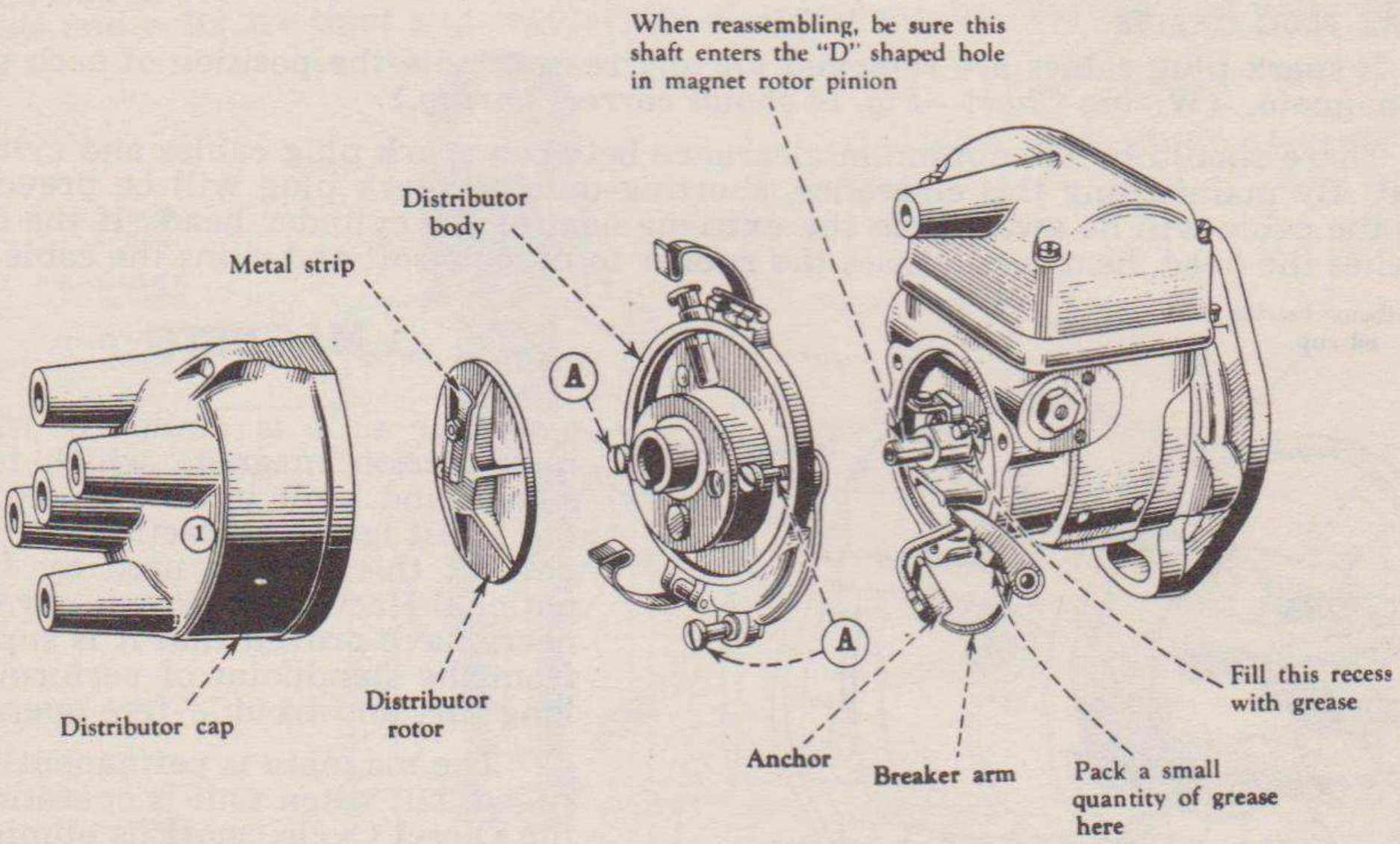

Fig. 16

Line up the distributor rotor key with keyway in spindle (*see Fig.* 16) and press rotor loosely on spindle. With the engine on top dead center of the No. 1 firing stroke, turn the distributor rotor until the metal strip on rotor points to the No. 1 terminal on the distributor cap. Place the distributor body on the magneto and be sure rotor shaft enters the "D" shaped hole in magnet rotor pinion. Remove the distributor rotor to tighten the three screws (*see "A", Fig.* 16). Replace the distributor rotor and distributor cap.

GREASING ROTOR BEARINGS AND DISTRIBUTOR GEAR CASE

Every 2,000 hours of operation, or at least every two years, the magnet rotor bearings, distributor gear case, and distributor gear bearing should be cleaned and repacked with magneto grease. We recommend this be done by a qualified serviceman.

DISTRIBUTOR CAP

Both the inside and outside of distributor cap should be kept reasonably free of dust and oil deposits. To insure long life of the distributor, care must be taken to keep the two small ventilator holes (*see "B", Fig.* 15) open at all times. The distributor rotor should also be kept clean.

TIMING THE MAGNETO TO ENGINE

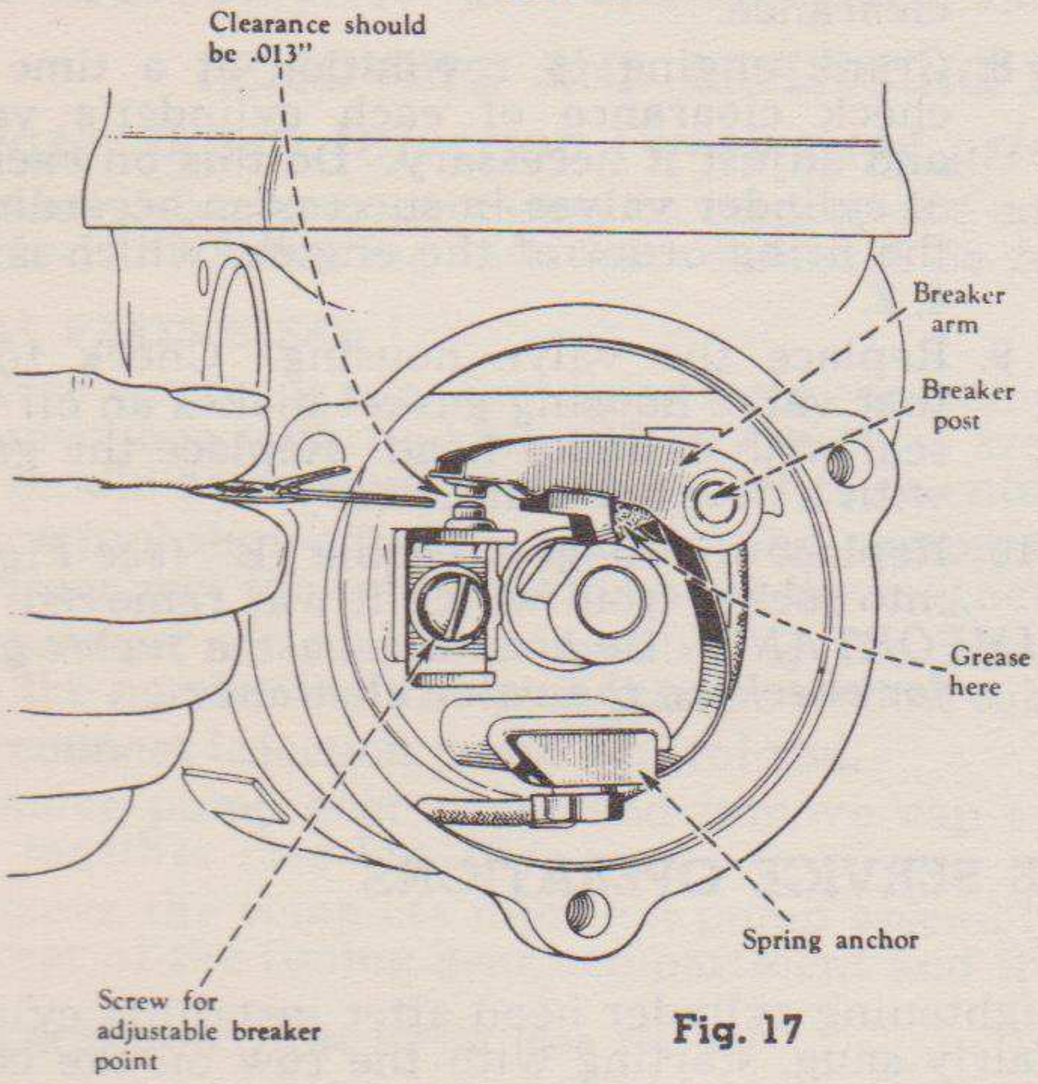

Fig. 17

If the magneto has been removed, the following instructions must be closely followed when replacing the magneto on the engine:

1. Pull out cable "E" (*see Fig.* 15) from the coil cover end. This will eliminate any possibility of accidental starting.
2. Set the compression release lever in low compression position (gasoline operation).
3. Crank the engine until No. 1 piston (the piston next to the radiator) is on the upper dead center of the compression stroke. The compression stroke can be determined by removing the No. 1 spark plug, placing the thumb over the opening, and cranking the engine until an outward pressure is felt. Continue cranking slowly until notch marked "DC" on the fan drive pulley is in line with pointer on front crankcase cover.
4. Remove the distributor cap and turn magneto coupling in a clockwise direction (as viewed from the coupling end) until the metal strip on the distributor rotor points toward the No. 1 terminal on the distributor cap.
5. Assemble magneto on engine, making sure that lugs on the impulse coupling engage in slots on magneto drive coupling. (Assemble magneto so that top is as far away from crankcase as possible.)
6. Insert magneto mounting bolts loosely in magneto flange, just enough to hold magneto in place. Then crank the engine one complete revolution to next top dead center. Now, push the upper part of the magneto toward the engine until impulse coupling just trips.
7. Tighten mounting bolts securely. Attach spark plug cables to engine and magneto. Start by connecting No. 1 cylinder spark plug to socket marked "1" on distributor block, connect No. 3 socket with No. 3 cylinder, next with No. 4 cylinder, next with No. 2 cylinder *(see Wiring Chart, Figs.* 14 *and* 15.*)*
8. To check timing, crank engine slowly until top dead center of No. 1 cylinder is reached at which time the impulse coupling should just trip.
9. The magneto is now correctly wired and timed.

NOTE: Push cable "E" back into socket in coil cover *(see Fig.* 14*)*.

VALVE CLEARANCE ADJUSTMENT

Check valves for clearance every 400 hours and adjust clearance if necessary.

A clearance of .018" is necessary between end of valve levers and valve stems when valves are closed—when engine is hot.

1. Before checking valve clearance "cut-out" the magneto by pulling cable "E" *(see Fig. 15)* out of socket. This will eliminate any danger of accidentally starting the engine.
2. Set compression release lever in low compression position (gasoline operation).
3. Remove valve housing.
4. Remove spark plug from the No. 1 cylinder (the cylinder next to the radiator).
5. Place thumb over the spark plug opening and slowly crank the engine until an outward pressure can be felt. Pressure indicates No. 1 piston is moving toward upper dead center of the compression stroke.
6. Continue cranking slowly until notch marked "D.C." on fan drive pulley is in line with timing pointer in front crankcase cover. Both valves are now closed on compression stroke of No. 1 cylinder.

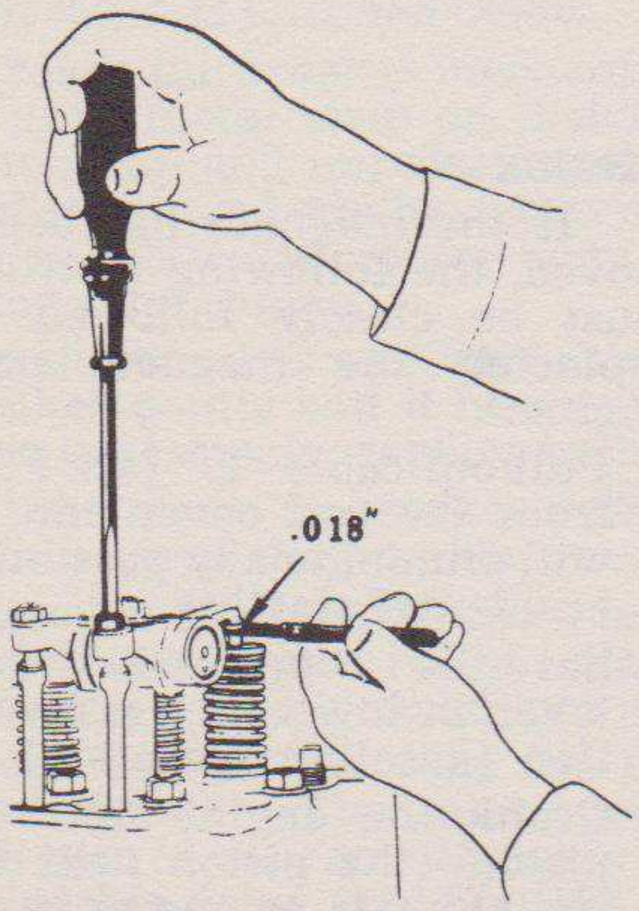

Fig. 18—Gauging Valve Levers with a Feeler Gauge.

7. Loosen the lock nut and adjust screw in valve lever so that gauge slips snugly between end of valve lever and valve stem *(see Fig. 18.)* Tighten lock nut and recheck clearance.
8. Crank engine ½ revolution at a time and check clearance of each cylinder's valves and adjust if necessary. Do this on each set of cylinder valves in succession according to the firing order of the engine, which is 1, 3, 4, 2.
9. Replace the valve housing. Check to see that valve housing gasket makes an oil tight seal with cylinder head. Replace the gasket with a new one if necessary.
10. Replace the magneto cable "E" *(see Fig. 15)* into socket from which it was removed.

IMPORTANT! Be accurate—use a feeler gauge for checking the valve clearance.

MINOR ENGINE SERVICE OPERATIONS

CYLINDER HEAD GASKET

For most satisfactory results in tightening cylinder head after installing cylinder head gasket, tighten down all nuts fairly snug, starting with the row on the center line, then going to the others. Retighten in the same order, giving each nut a small part of a turn at a time. Continue this until all nuts are tight. Do not screw one nut down perfectly tight, and then go to the next, as you will not secure an even pressure on the gasket in this manner.

After replacing cylinder head, it is necessary to insure against leaks by retightening the stud nuts after engine has been run and water jacket becomes thoroughly heated. To tighten nuts properly, the valve rocker shaft assembly must be raised.

Be sure to adjust valve tappet clearance after the last tightening of cylinder head stud nuts.

REMOVING CYLINDER HEAD OR VALVES

Whenever cylinder head or valve mechanism has been removed, care must be taken when they are replaced that valves are not damaged by coming into contact with top of piston, or through improper adjustment of valve lever screw by being pushed down too far into cylinder sleeve.

To prevent this, always loosen valve lever screw clear up and bring piston to top dead center of the compression stroke. Then screw down on adjustment screw until proper clearance is obtained.

After replacing cylinder head, check to see that there is a clearance of not less than .060", or more than .080", between all four starting valve covers and starting valve shaft cam rollers, in Diesel Position. If clearance is incorrect, readjust operating rod adjusting yoke on right side of engine.

REMOVAL OF PISTONS

In case of removal of pistons from the crankcase, care must be taken to see that each part is re-assembled in its original place and position. To assist in this operation, pistons, connecting rods and connecting rod caps are marked with the corresponding cylinder numbers 1, 2, 3 and 4, and the cylinder numbers are also marked on the bottom flange of the crankcase.

Each piece should be re-assembled so that the numbers correspond and that all numbers are on the same side of the assembly as the number on the crankcase flange indicates.

IRREGULAR FIRING OF ENGINE

The bleeder valves at the top of the injection nozzles at the cylinder head should be opened only in case of irregular firing caused by entrapped air in the injection lines, or if engine is continuously noisy in one cylinder. Opening bleeder valve will locate noisy cylinder and usually indicate a faulty injector.

FUEL INJECTION PUMP AND GOVERNOR

Do not attempt to adjust pump or governor.

In case of serious trouble, sufficient to cause failure of the pump to operate satisfactorily, check over instructions regarding cleaning and oiling operations, and if this does not remedy the trouble refer to a qualified serviceman.

Use clean fuel oil for good and continuous operation of the Injection Pump.

REMOVING AND REPLACING INJECTION PUMP

Note: Bosch Injection Pump used prior to Grader Serial M3465

In case it becomes necessary to remove the complete Fuel Injection Pump from the engine, the following instructions should be followed:

KEEP ALL PARTS CLEAN

Before removing any fuel lines from the pump, first thoroughly clean the pump and connections with fuel oil. When the lines are removed, the connections on the engine should be covered to prevent dirt from entering the system.

Close fuel shut-off valve at tank. Put compression release lever in gasoline position. Disconnect the center terminal at the magneto distributor cover.

Disconnect all fuel lines leading to the injection pump. Disconnect injection lines to the nozzles the injection pump overflow tube.

Disconnect injection pump control rod.

Remove pump gear cover and remove cap screws "A" holding hub, gear and pointer together *(see Fig.* 19.)

Remove the complete injection pump assembly after taking out the four screws at the rear of the timing gear compartment and the one at the front inside.

TO REPLACE INJECTION PUMP (See Fig. 19)

Crank engine until the No. 1 cylinder is at top dead center of the compression stroke. This position can be determined by removing the No. 1 spark plug and placing the thumb over the opening and cranking the engine slowly until an outward pressure is felt. Continue cranking slowly until notch marked "D.C." on fan drive pulley is in line with timing pointer in front crankcase cover.

Check pump gasket and cover gasket to be sure it is clean, and assemble in place.

Assemble injection pump to engine and secure by center, inner and lower screws.

Place injection pump gear "C" on drive hub "B" and assemble gear (with engine at top dead center compression No. 1 cylinder), so that chamfered tooth "D" on gear lines up with "D.C." mark on front cover "E" which is located at right side of opening above center.

Under no conditions should an attempt be made to retime the engine with the front cover in place by matching the "K" marks on injection pump gear and idler gear.

Turn injection pump gear hub "B" so that the groove on hub and groove on face of injection pump gear line up. Place timing pointer "F" on hub with pointer at 0° position against gear face. Bolt hub, gear and pointer together with capscrews "A" in this position.

Replace the fuel pump gear cover. Reconnect controls, fuel lines overflow tube and injection lines. Replace the magneto terminal and spark plug. Turn on the fuel.

Start the engine, bleed the fuel system, *(see page* 3*)* and reset the injection timing as required *(see page* 26*)*.

INJECTION PUMP TIMING

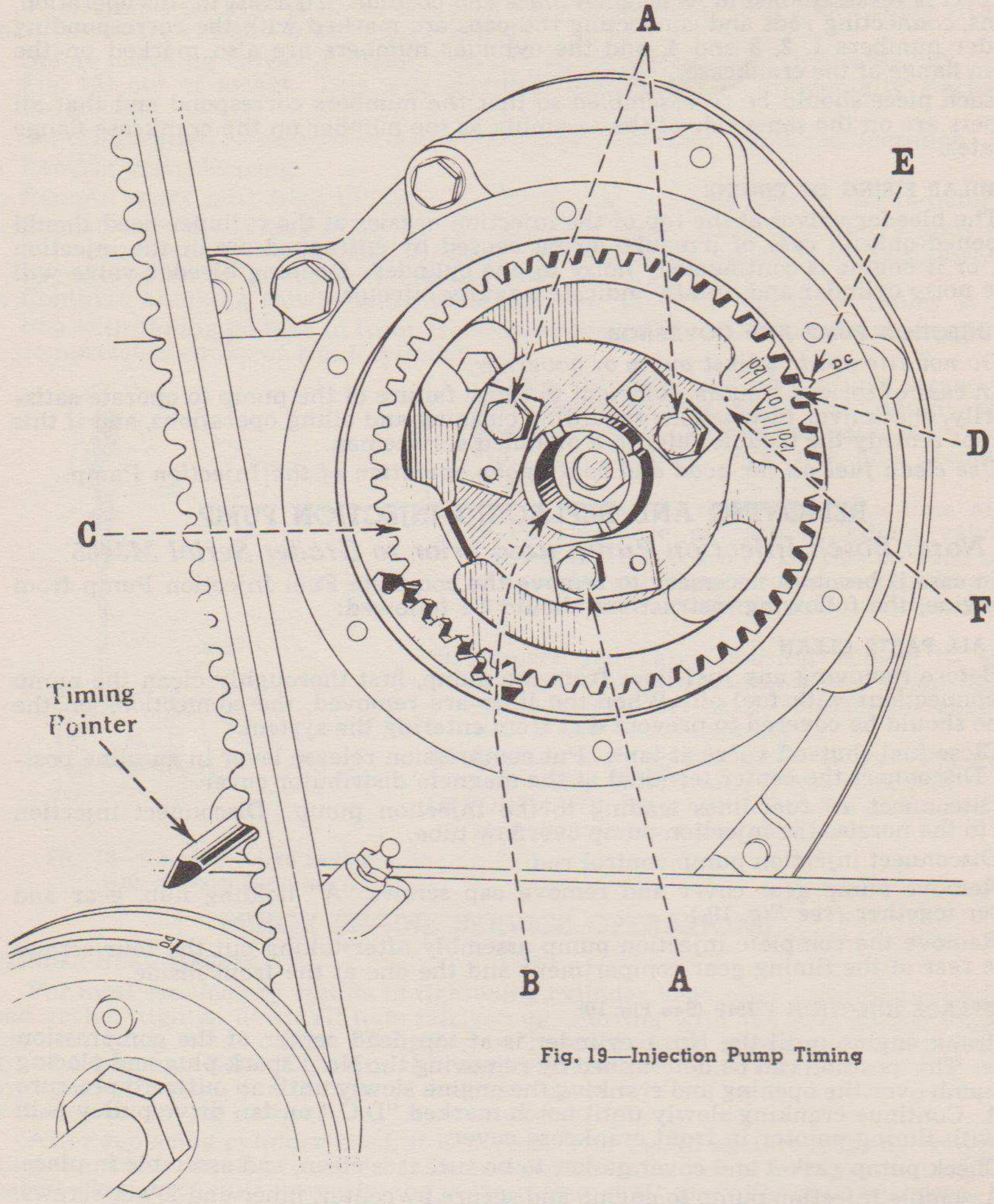

Fig. 19—Injection Pump Timing

Injection timing may be advanced or retarded by means of slots in the gear. This adjustment must be made when engine is not operating.

The injection pump is fitted with a timing adjustment. The pump timing adjustment indicator is bolted through slots in injection pump gear to gear hub, which is keyed to injection pump shaft. Pump gear timing indicator can be seen by removing pump gear cover.

The adjustment is normally set with indicator on center mark of graduations on pump gear In order to be sure of the best operating conditions, the indicator can be tried on either side of the center mark and set at the best operating position.

To change location of indicator, "F", loosen cap screws "A" holding indicator and gear hub "B" to gear "C" and turn gear hub "B" until indicator is at desired position; then tighten cap screws "A" *(see Fig. 19)*.

For advanced position, turn gear hub clockwise.

For retarded position, turn gear hub counterclockwise.

The correct adjustment is obtained when engine speed is maximum for a fixed load, and engine operation is smooth with a clean exhaust.

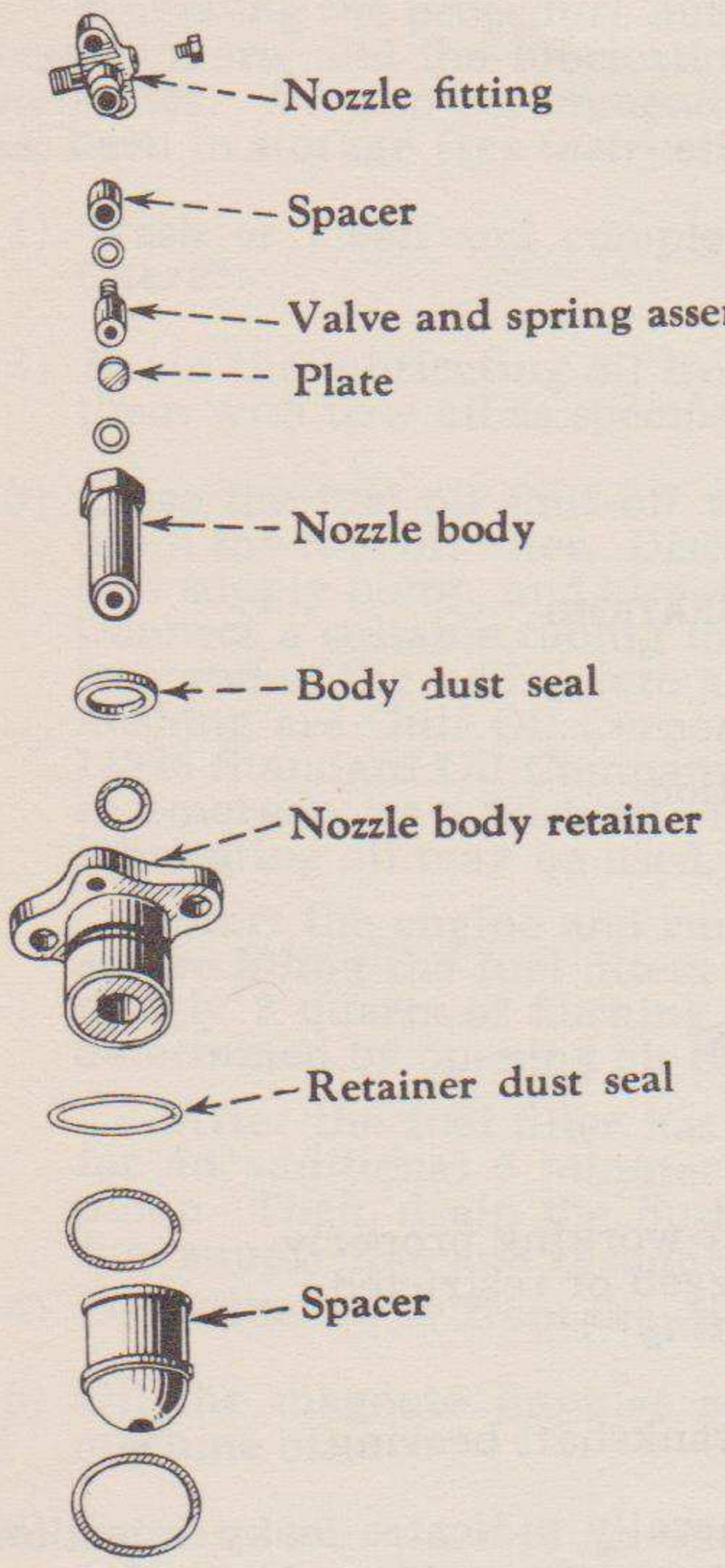

Fig. 20—Injection Nozzle

INJECTION NOZZLE

If any cylinder seems to fire too noisy, it usually is an indication that the injection nozzle valve is leaking badly. Clean nozzle and fitting thoroughly with clean fuel oil. Remove nozzle and disassemble. A leaky valve will generally appear black. Clean the valve and seat, and wash in clean fuel oil *(see Fig. 20)*.

The nozzle plate should be free of carbon. There should be no carbon in nozzle body spacer.

DO NOT RIDE CLUTCH

ENGINE CLUTCH

The engine is equipped with a spring-loaded 14" diameter single-plate dry disk clutch.

CARE OF THE ENGINE CLUTCH

The clutch is so designed that it requires a minimum of attention. It is important, however, that the throw-out bearing be kept properly lubricated. This can easily be done by following the instructions *given in Lubrication Chart.*

CLUTCH CLEARANCE

It is very important that a clearance of $\frac{3}{16}$" be maintained between the clutch release bearing and the clutch release levers. In order to maintain this clearance the clutch pedal should have a free movement of 2¾", measured from the lower side of platform and clutch pedal where it contacts with platform or from a chalk mark placed on the clutch pedal where it passes through the platform when the clutch pedal is fully engaged. As the clutch wears this free movement decreases and the adjustment should be made before the free movement has become less than 1⅜". The clutch may be badly damaged unless a free movement of the foot pedal is maintained. The clutch can easily be reset to the original position by adjusting the length of the rod.

SUGGESTIONS FOR CHECKING TROUBLE

Study the problem before making any changes.

If any adjustments are to be disturbed, the original setting should be noted, so this same setting may be restored in case the part changed does not remedy the trouble.

FAILURE TO START ON GASOLINE:

No gasoline in carburetor.
Gasoline supply cock closed.
Carburetor choked too much.
No spark from magneto.
Gears engaged (transmission).
Gasoline starting device not set.
Condensation on spark plugs.

MISSING AND BACKFIRING:

Water in gasoline.
Air leaks around intake manifold.
Starting valves not properly seated.

FAILURE TO CHANGE OVER TO HIGH COMPRESSION OPERATION:

Starting valve mechanism sticks.
Injection pump not primed (vent air).
Fuel oil supply cock closed at tank.
Speed control hand lever not set in proper position.
Fuel supply pump not developing fuel pressure.

LACK OF LUBRICATING OIL PRESSURE:

Insufficient amount of oil.
Dirt under pressure regulating valve.
Oil pump strainer clogged or pump not working.
Broken oil pressure indicator or pipe lines.

LACK OF POWER:

Injection pump air bound (vent air supply).
Insufficient fuel, filter clogged, supply pump not working properly.
Clutch slipping, exhaust pipe or air cleaner clogged or restricted.
(Also see "Lack of Compression" and "Overheating".)

KNOCKING:

Loose piston pin, connecting rod, camshaft or crankshaft bearing.
Broken piston rings or loose pistons.
Combustion knock in one or two cylinders generally indicates leaky injection nozzle valve.
General rough running usually due to improper timing of injection.
Poor grade of fuel, or water in fuel.
Excessive carbon in cylinder.

LACK OF COMPRESSION:

Sticky, dirty, pitted or improperly adjusted valves.
Stuck, worn, or broken piston rings.
Worn pistons or cylinder sleeves.
Leaky cylinder head gasket.
Leaky gasoline starting valve.
(Also see "Lack of Oil Pressure".)

OVERHEATING:

Insufficient amount of water, fan belt slipping, excess load on engine.
Inside of radiator and cylinder block limed up or clogged with dirt.
Outside of radiator or radiator screen covered with dirt or chaff.
Lack of oil pressure, or water pump not working properly.
Water pump air bound.

ENGINE SMOKES:

Overloaded injection of fuel too early, lack of compression, poor grade of fuel oil, piston pumping lubricating oil.

EXCESSIVE LUBRICATING OIL CONSUMPTION:

Oil leaks, pistons pump oil, poor grade of lubricating oil being used, piston rings stuck in grooves.

NOTE: If the injection pump does not perform properly, refer to a qualified serviceman.

STORING AND HOUSING DIESEL ENGINES

When the Unit is not to be used for a period of time, it should be stored in a dry and protected place. To leave equipment outdoors, exposed to the elements, will result in materially shortening its life.

Following the procedure outlined below when the Unit is placed in storage for 30 days or more, and the lubrication precautions should be repeated every six months thereafter. We also recommend caution to be practiced in starting an engine that has been in storage *(see instructions on the next page)*.

(1) Wash or clean and completely lubricate the Unit *(refer to the "Lubrication Chart")*.

(2) Drain the lubricating oil from the Diesel injection pump and governor and refill them with new oil as specified on the Lubrication Chart.

(3) Close the fuel oil shut-off valve under the fuel tank, clean the water trap and drain the fuel oil filter. Disconnect the fuel oil supply line at the inlet side of the fuel supply pump, and also disconnect the fuel return pipe at the injection pump. Connect a suitable tubing to the inlet side of the fuel supply pump and lead the free end of the tubing into a container of flushing oil. The oils recommended for flushing are Gulf Oil Corporation No. 301, Shell Latus No. 22 Oil, Formula No. 11326 Standard Oil Company, or No. 8504 or E382 Socony Vacuum Oil Company. In emergencies a flushing oil mixture of ½ kerosene and ½ good grade of light lubricating oil may be used.)

Start the engine and run it on gasoline until sufficient fuel has been used to assure filling the fuel filters and flushing the pump. (This will require approximately 2 quarts of flushing mixture to fill filter.) (Filling of fuel filter can be determined by opening air bleed on top of fuel filters.)

After the fuel filter has been filled, the engine should continue on gasoline for an additional 5 minutes to assure the flushing of the internal parts of the pump. Then, drain the flushing oil from the fuel filter. Reconnect the regular fuel supply line and reconnect the fuel return pipe to the fuel supply pump.

(4) Drain the water from the cooling system.

(5) Oil the magneto impulse coupling liberally with a light oil, such as sewing machine oil.

(6) Remove the spark plugs and put the compression release lever in the gasoline (starting) position. Pour one-half teacup full of SAE-50 lubricating oil of a good grade through the spark plug opening into each cylinder. Put the compression release lever in the Diesel position.

(7) Remove the valve housing cover and spray oil over the rocker arm and the starting valve assembly; then, replace the cover.

(8) Cover the exhaust pipe with a tin can to prevent moisture from entering the manifold.

(9) Remove the oil filter element. (If any evidence of rust is found on the center stud, clean the stud thoroughly.) Replace the filter element with new one and drain out any sludge from the filter base.

The engine must not be run after the slushing operation.

BEFORE STARTING DIESEL ENGINES THAT HAVE BEEN IN STORAGE

(1) Remove spark plugs and put compression release lever in gasoline (starting) position, and pour a mixture of one-half gasoline and one-half light lubricating oil into each cylinder (one-half teacup full per cylinder is enough).

(2) Remove valve housing cover and flush valve and valce operating mechanism with same mixture.

(3) Crank engine rapidly until excess oil has been blown out of spark plug holes. This operation will loosen any tight piston rings and wash old gummy oil from valves and pistons.

(4) Flush out impulse coupling with kerosene and lubricate as specified.

(5) Flush out crankcase with kerosene and fill with specified lubricating oil. *(See Lubrication Chart.)*

(6) Drain the oil from the injection pump and refill to proper level with specified lubricating oil. *(See Lubrication Chart).*

(7) Be sure filter has a new element before starting engine.

(8) Remove tin can from exhaust pipe.

(9) Install spark plugs.

(10) Fill water cooling system.

(11) Fill fuel tanks.

(12) Start engine and let run slowly; observe if any valves are sticking. If so, pour small quantity of kerosene on valve stem until loose.

(13) Assemble valve housing cover.

CAUTION! Do not accelerate the engine rapidly or operate at high speed immediately after starting.

ENGINEER FIELD SERVICE
BULLETIN No. L-1016

WAR DEPARTMENT
Office, Chief of Engineers
Washington, D. C. November 21, 1942

LUBRICATION INSTRUCTIONS FOR GRADER, ROAD, MOTORIZED, DIESEL (GALION MODEL 101)

4

1. GENERAL — The following lubrication instructions for the Grader, road, motorized, Diesel (Galion model 101), are published for the information and guidance of all concerned, and supersede all previous instructions.

a. References — Equipment will be lubricated in accordance with the latest instructions contained in Lubrication Guides and Engineer Field Service Bulletins. Reference is made to the General Instruction section (EFSB L-1000-A) for additional lubrication information, and to the Product Guide section (EFSB L-1000-F) for latest approved lubricants.

2. LUBRICATION GUIDE—Lubrication instructions for all points to be serviced are shown in War Department Lubrication Guide No. 1016, which specifies the types of lubricants required and the intervals at which they are to be applied. The following lubrication instructions contain the same information as the Guide. Guides from which data are reproduced are 10x15 in. laminated guides which are an accessory of each piece of equipment.

3. REPORTS AND RECORDS — *a. Reports* — If lubrication instructions are closely followed, proper lubricants used, and satisfactory results are not obtained, a report will be made to the engineer officer responsible for the maintenance of the equipment.

b. Records—A complete record of lubrication servicing for this equipment will be kept on a Lubrication Check Card.

For the Chief of Engineers:

R. F. FOWLER,
Brigadier General, Corps of Engineers,
Chief, Supply Division.

WAR DEPARTMENT LUBRICATION GUIDE

GRADER, ROAD, MOTORIZED, DIESEL
(GALION MODEL 101)

MFR'S. SERIAL No. located on left front side of frame.

Lubricant • Hours

Steering shaft bearings **CG 8**
(Some models, one fitting)

Clutch and brake shaft **CG 8**

Tire pump (oiler-wick) **OE 64**
(Reached from under seat)

Transfer drive case **GO 1024**
(See Table) (Keep to level of fill pipe) (Note 6)

Hydraulic control system tank **OE 1024**
(See Table) (Keep level 2 in. below tank top) (Reached from under seat) (Note 7)

Clutch release bearing **CG 8**
(Sparingly)

Crankcase drain plug

Transmission (See Table) **GO 1024**
(Note 6)

SERVICED FROM UNDER HOOD

Oil filters (Note 5) **64**

Crankcase (See Table) **OE 64**
Drain, refill (Note 4)
Check level every 8 hours

Transmission level plug

Magneto distributor bearing (SAE 10) **OE 512**
(Notes 8 and 14)

Impulse coupling **OE 64**
(SAE 10) (Note 9)

Generator (Sparingly) **OE 64**

Fan hub bearing (fitting) **CG 64**
(Sparingly)

Water pump shaft **WP 8**
(covered fitting)
(Sparingly)

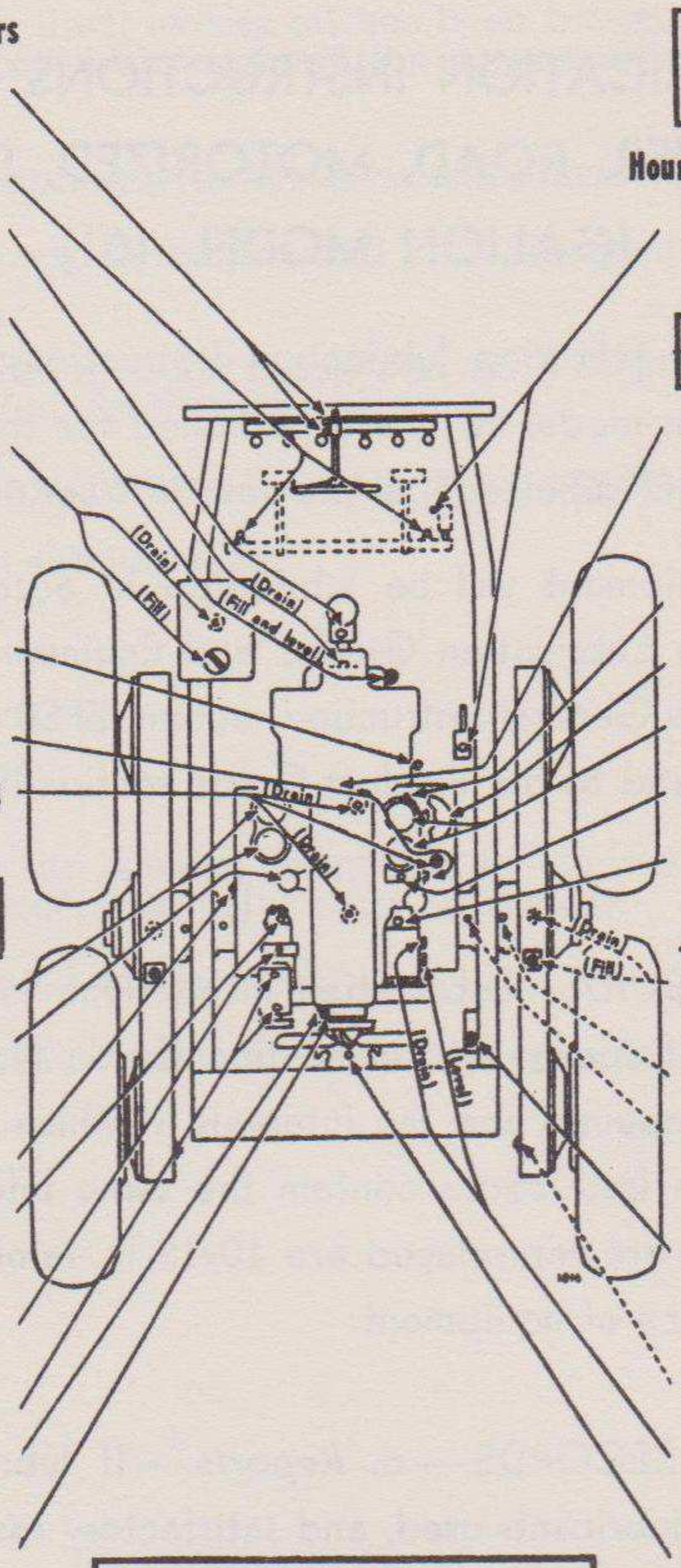

CAUTION—Lubricate Dotted Arrow Points on BOTH SIDES

Hours • Lubricant

8 CG Transmission shift control rod

SERVICED FROM UNDER HOOD

64 CG Clutch pilot bearing (Fitting on flywheel reached through cover on clutch housing)

64 OE Starter (Sparingly)

8 OE Air cleaner (Note 3)

Fuel filters (Note 10)

64 OE Starter (Sparingly)

64 OE Injection pump and governor

1024 GO Tandem drive case (See Table) (Note 6)

8 CG Tandem drive hub brg.

8 CG Rear axle bearings (Reached from below)

256 HB Hydraulic brake master cylinder (Refill to ½ in. below plug hole)

Tandem drive case level plug
Injection pump level and drain cocks

8 CG Hydraulic pump shaft bearing

CAUTION—Cover Exhaust Stack when machine is not in use

NOTE—See page 4 for lubrication of GRADER

KEY

LUBRICANTS	
OE—OIL, engine Crankcase grade (unless otherwise specified)	**CG**—GREASE, general purpose No. 1 (above +32° F.) No. 0 (+32° F. to 0° F.)
GO—LUBRICANT, gear, universal	**HB**—FLUID, brake, hydraulic
	WP—GREASE, water pump

TABLE OF CAPACITIES AND LUBRICANTS TO BE USED

UNIT	CAPACITY (Approx.)	LOWEST EXPECTED AIR TEMPERATURE		
		Above +32° F.	+32° F. to 0° F.	Below 0° F.
Crankcase	16 qt.	OE SAE 30	OE SAE 10	Refer to EFSB L-1000-D
Transfer Case	5 qt.	GO SAE 90	GO SAE 90	
Transmission	48 qt.			
Tandem Drive (each unit)	16 qt.			
Hydraulic Control System Tank	40 qt.	OE SAE 10	OE SAE 10	

TIRE PRESSURES

Front
80 lb.

Rear
25 lb.

1016

HIGH TEMPERATURE: For Lubrication and Service above +90° F., refer to EFSB L-1000-E.

NOTES

1. FITTINGS—Clean before applying the lubricant gun. Unless otherwise speci fied, lubricate until new grease extrudes from the bearing. Lower scarifier tc raise front assembly when lubricating. CAUTION: Lubricate after washing grader.

2. ODOMETER—Odometer readings are translated into operating hours on basis of 32 miles equals 8 hours, 256 miles equals 64 hours, etc.

3. AIR CLEANER—(Engine) Every 8 hours, remove, clean and refill oil cup to circular level mark with OE. Under severe dust conditions service more often. Every 64 hours, or as often as 8 hours if operating in severe dust conditions, remove entire assembly and clean. Clean entire air cleaner and air pipes. Keep air intake screens clean and all connections tight. (Engine governor breather) Every 256 hours remove breather, wash, and reoil with OE, drain and replace.

4. CRANKCASE—Drain only when engine is thoroughly warm. Refill to FULL mark on gage. See Table. CAUTION: When running engine, be sure pressure gage indicates oil is circulating.

5. OIL FILTERS—When changing crankcase oil, drain filter, clean case and renew filter element.

6. GEAR CASES—Every 128 hours, check level with grader on level ground and add lubricant if necessary. When draining, drain immediately after operation.

7. HYDRAULIC CONTROL SYSTEM—Every 8 hours, remove filler cap, unscrew submerged screen, clean and replace. Every 64 hours, check and maintain level 2 in. below tank top. Keep vent hole in cap open.

8. MAGNETO DISTRIBUTOR BEARING—Every 256 hours, pack recess in breaker arm post and rear of breaker arm rubbing block sparingly with WB.

(Continued on page 5)

EFSB L-1016

WAR DEPARTMENT LUBRICATION GUIDE

GRADER, ROAD, MOTORIZED, DIESEL
(GALION MODEL 101)

MFR'S. SERIAL No. located on left front side of frame.

CAUTION—Lubricate Dotted Arrow Points on BOTH SIDES

Lubricant • Hours

- Front axle pin bearing **CG 8**
- Steering shaft bearings (Rear fitting, lower end of shaft) **CG 8**
- Tie rod, inner bearings **CG 8**
- Scarifier cylinder piston rod ball stud **CG 8**
- Universal joints **CG 8**
- Circle reverse worm shaft bearings (Sparingly) **CG 8**
- Circle reverse gear case (Fill and level plug) **GO 256**
- Circle reverse gear shaft lower bearings (Sparingly) **CG 8**
- Circle side shift link **CG 8**
- Universal joint **CG 8**
- Side shift gear shaft and gear case bearings (Sparingly) **CG 8**
- Universal joint **CG 8**
- Small side shift worm gear case (Fill and level plug) **GO 256**

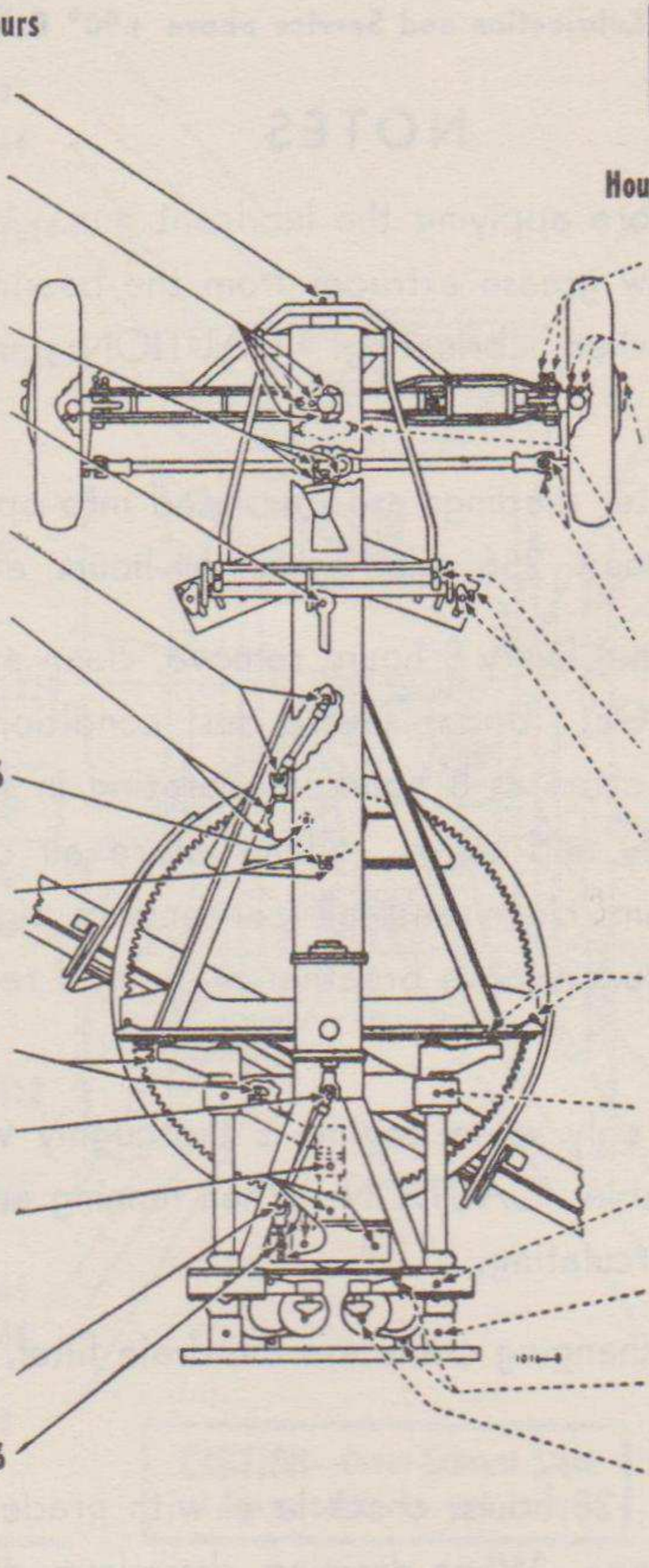

Hours • Lubricant

- **8 CG** Steering spindle king pin
- **8 CG** King pin
- **64 WB** Front wheel bearings (Note 11)
- **8 CG** Draw bar ball stud
- **8 CG** Tie rod, outer bearings
- **8 CG** Scarifier lift shaft brg.
- **8 CG** Scarifier hang rod ball studs, upper and lower
- **8 CG** Hang rod ball studs, upper and lower
- **3 CG** Lift shaft bearing, front
- **8 CG** Indexing ring
- **8 CG** Lift shaft bearing, rear
- **8 CG** Cylinder connection brgs.
- **8 CG** Lift cylinder ball stud

NOTE—See page 2 for lubrication of DRIVING MECHANISM

KEY

LUBRICANTS	
GO—LUBRICANT, gear, universal	**WB**—GREASE, general purpose No. 2
CG—GREASE, general purpose No. 1 (above +32° F.) No. 0 (+32° F. to 0° F.)	

NOTES

(Continued from page 3)

9. IMPULSE COUPLING — Oil liberally. Use Diesel fuel or kerosine below +10° F.

10. FUEL FILTERS—Every 64 hours, remove and clean sediment bowl and screen in fuel strainer. (Early models having Bosch injection pump) Every 64 hours remove filter cover, clean cloth element, dry, and reassemble. (Late models having IHC injection pump) Every 1024 hours or more frequently if required, drain and clean auxiliary filter base. Remove old element, discard and install new element. Install adapters on new filter element and reassemble. CAUTION: Do not disturb final fuel filter assembly at any time unless it becomes necessary to replace element. Service filter in same manner as auxiliary fuel filter.

a. (Bosch injection pump) The engine will fail to run on the Diesel cycle if there is any air in the fuel injection system. To remove the air it is necessary to bleed the system by opening the vent cocks successively on the fuel filter and injection nozzles. Open the fuel filter vent cock, then start the engine. Close the vent cock when fuel starts to flow. With the engine operating on the gasoline cycle, advance engine speed control lever slightly while venting fuel injection lines. Open each nozzle vent cock individually. Close each cock when the fuel starts to flow. Push the compression release rod until release lever latches in the jaw on manifold side of engine. Disengage the clutch. Put the engine speed control lever in shut-off position. If this is not done, the engine will be flooded with fuel oil.

b. (IHC injection pump) The engine will fail to run on the Diesel cycle if there is any air in the fuel injection system. To remove the air; check the air and water trap; if empty, refill with fuel and then bleed the system by venting fuel filters and injection nozzles. All air must be vented from the auxiliary fuel filter before engine is started by opening vent in auxiliary filter until fuel flows free of air from this vent. All air is vented from fuel pipes and final filter after engine is running on the gasoline cycle by opening vent in final filter until fuel, free of air, flows from vent. Next, advance engine speed control lever slightly and open each nozzle vent until fuel flows free of air. The loss of power, or missing of the engine, is frequently caused by air in the fuel system and to overcome this trouble it is only necessary to vent fuel system as described above.

EFSB L-1016

NOTES

11. FRONT WHEEL BEARINGS — Every 1024 hours, remove wheel, clean and repack bearings with WB. Examine bearings and bearing seals. Replace if worn or damaged. Refer to EFSB L-1000-E for high temperature operation.

12. HYDRAULIC CYLINDER PISTON RODS—Every 64 hours, clean and coat hydraulic cylinder piston rods with CG. CAUTION: All piston rods will be drawn into the hydraulic cylinders as far as possible when machine is not in use.

13. CIRCLE REVERSE RING—Every 8 hours or more frequently if required, clean and lubricate with OE.

14. MAGNETO—Every 2,000 hours of operation, remove, clean and repack magneto rotor bearings, distributor gear case and distributor gear bearings with WB.

15. OIL CAN POINTS—Every 64 hours, lubricate throttle connections, clutch and brake linkage, clevises, hinges, latches, hydraulic cylinder hinge pins with OE.

16. POINTS REQUIRING NO LUBRICATION—Governor, Hydraulic Motor, Hydraulic Cylinders.

17. BRAKE CYLINDERS (Bleeding)—If air enters the brake cylinders due to hydraulic line breakage or level in brake master cylinder being too low the brake action will become faulty and require bleeding of air from the system. To bleed air from the system, proceed as follows: Fill hydraulic brake master cylinder. Remove cap screw from bleeder valve, insert nipple of bleeding tube, and place free end of tube in clean glass jar. End of tube must be submerged in brake fluid at all times during bleeding or air will be drawn back into cylinder. Open bleeder valve 1 full turn and pump brake pedal forcing air into jar. Continue pumping until fluid runs clear without air bubbles. Close valve and replace cap screw. Do not depress brake pedal until bleeder valve at other wheel has been opened. Repeat operation on other wheel. Fill master cylinder with FLUID, Brake, Hydraulic.

18. BATTERY—Weekly, check level of water in battery. Battery is located under seat, right side. Add distilled, rain or other clean fresh water to bring level 3/8 in. above top of separators. Clean terminals, tighten snugly, and coat lightly with CG.

CORPS OF ENGINEERS
LUBRICATION CHECK CARD
USE WITH GUIDE NO._____

Machine:_____ Model:_____

Serial No.:_____ Date Card Started:_____

Using Organization:_____ Date Card Ended:_____

Initial Hourmeter Reading:_____

EVERY 8 WORKING HOURS LUBRICATE MACHINE

HOURS	HOUR METER READING	DATE	INITIALS	HOURS	HOUR METER READING	DATE	INITIALS	HOURS	HOUR METER READING	DATE	INITIALS	HOURS	HOUR METER READING	DATE	INITIALS
8				8				8				8			
16				16				16				16			
8				8				8				8			
32				32				32				32			
8				8				8				8			
16				16				16				16			
8				8				8				8			
64				64				64				64			
8				8				8				8			
16				16				16				16			
8				8				8				8			
32				32				32				32			
8				8				8				8			
16				16				16				16			
8				8				8				8			
128				128				128				128			
8				8				8				8			
16				16				16				16			
8				8				8				8			
32				32				32				32			
8				8				8				8			
16				16				16				16			
8				8				8				8			
64				64				64				64			
8				8				8				8			
16				16				16				16			
8				8				8				8			
32				32				32				32			
8				8				8				8			
16				16				16				16			
8				8				8				8			
256				512				256				1024			

HOW TO USE THIS CARD

After every 8 hours of operation enter date in next space in date column. Lubricate all points shown on Guide up to and including the "Hour" interval shown opposite the date. Example: When 128 is indicated after the date entry lubricate all 8, 16, 32, 64 and 128 hour intervals shown under "Hours" on the Guide. Use ✓ in "Hour" column to record lubrication of 4 hour intervals.

USE ONLY ONE SIDE OF THIS CARD

Form 2398

990620 O—52——4

CORPS OF ENGINEERS

LUBRICATION CHECK CARD

USE WITH GUIDE NO._____

Machine:_____ Model:_____

Serial No.:_____ Date Card Started:_____

Using Organization:_____ Date Card Ended:_____

Initial Speedometer or Odometer Reading:_____

EVERY 8 HOURS CHECK AND FILL CRANKCASE TO LEVEL

MILES	SPEEDOMETER OR ODOMETER READING	DATE	INITIALS	MILES	SPEEDOMETER OR ODOMETER READING	DATE	INITIALS
500				500			
1,000				1,000			
500				500			
1,000				1,000			
500				500			
1,000				1,000			
500				500			
1,000				1,000			
500				500			
5,000				5,000			
500				500			
1,000				1,000			
500				500			
1,000				1,000			
500				500			
1,000				1,000			
500				500			
10,000				10,000			

HOW TO USE THIS CARD

After every 500 miles of operation enter date in next space in date column. Lubricate all points shown on Guide up to and including the "Mile" interval shown opposite the date.

Example: When 5,000 is indicated after the date entry lubricate all 500, 1,000 and 5,000 mile intervals shown under "Miles" on the Guide.

USE ONLY ONE SIDE OF THIS CARD

NOTES:

Form 2398

INDEX

ELECTRICAL 1-3
FRONT AXLE, WHEELS AND STEERING 4
SCARIFIER 5
DRAWBARS, CIRCLE, MOLDBOARD AND CONTROL PARTS 7
HYDRAULIC SYSTEM 10
HYDRAULIC BRAKES 16

GENERATOR

The purpose of a generator is to supply current for lights, and other electrical accessories, and to keep the battery in a charged condition by replacing in the battery the energy consumed by the cranking motor in starting.

TYPE GENERATOR

The Generator as used on the Galion 101 Diesel Powered motor grader is of the 12 volt type Adjustable third brush with Step-Voltage Control, Fig. 1. This type of unit automatically inserts a resistance into the generator field as the battery approaches a fully charged condition, and removes this resistance as the battery approaches a discharged condition. In effect, this is a two state generator delivering either a high or a low output, depending upon the battery gravity and the connected load.

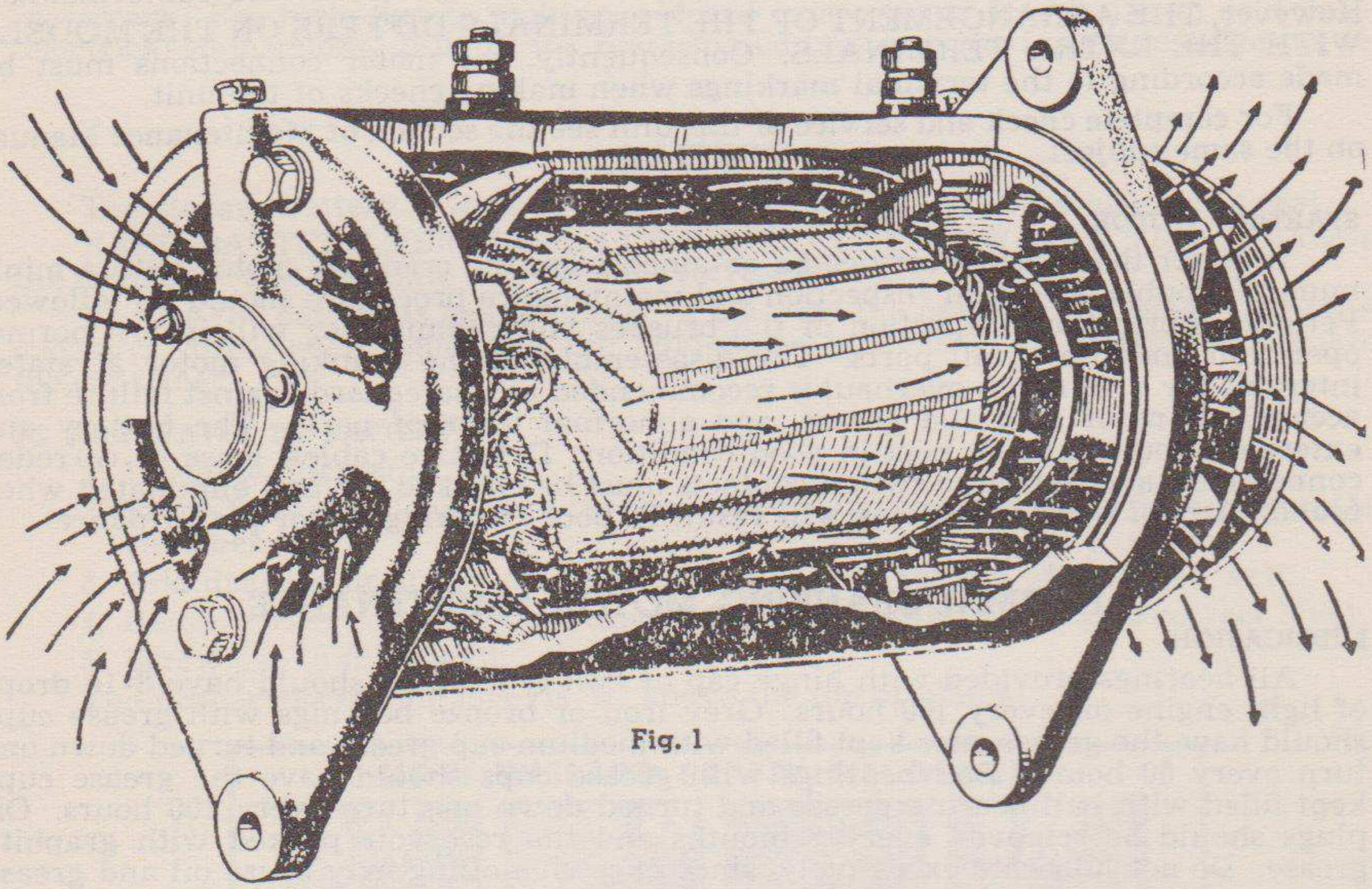

Fig. 1

NORMAL GENERATOR MAINTENANCE

LUBRICATION: All bearings provided with hinge cap oilers should have 8-10 drops of light engine oil every 100 hours. Generators with grease cups and bronze bearings should have the grease cups kept filled with medium cup grease and turned down one turn every 50 hours. With ball bearings, the grease cup should be kept filled with ball bearing grease and turned down one turn every 100 hours. Do not lubricate excessively, since excessive oiling may cause oil and grease to gum on the commutator and cause a reduction of the generator output. Never oil the commutator.

INSPECTION

The cover band should be removed and the commutator and brushes inspected at regular intervals. The frequency of the intervals will be determined by its operation. High speed operation, dust and dirt encountered on some work are all factors which increase bearing commutator and brush wear. Generally speaking generators should be inspected every 500 hours.

COMMUTATOR

If the commutator is dirty, it may be cleaned with a strip of No. 00 sandpaper. NEVER USE EMERY CLOTH TO CLEAN THE COMMUTATOR. All dust must be blown from the generator after the commutator has been cleaned.

BELT

The generator on the Galion 101 Motor Grader is belt driven and the belt should be checked and tightened if necessary. Low belt tension will cause a reduced and unsteady output. Excessive belt tension will cause rapid belt and bearing wear. Replace the belt if it is frayed or worn.

STEP-VOLTAGE CONTROLS

The step-voltage control, consisting of a voltage control unit and a cut-out relay, is normally mounted either on the generator or on the engine side of the dash. It is used with third brush generators. Some models have an upper set of contact points on the cut-out relay armature to provide a convenient ground for the cranking motor solenoid relay circuit. This is a safety feature as the solenoid relay control circuit cannot be completed while the cut-out relay contact points are closed. This upper set of points has no connection with the operation of the voltage control. One model step-voltage control with the upper set of points has an extra terminal stamped "3B". An extra lead from the third brush in the generator is connected to this terminal. This type of control unit has the cranking motor solenoid relay circuit completed through the third brush of the generator to ground by means of this extra terminal. All the step-voltage control units are checked and adjusted in the same manner. However, THE ARRANGEMENT OF THE TERMINALS DIFFERS ON THE MODELS WITH THE EXTRA TERMINALS. Consequently, the meter connections must be made according to the terminal markings when making checks of the unit.

For complete check and service of this unit see the section of Maintenance Manual on the same subject.

STARTING MOTOR

In order that normal service be obtained from the cranking motor with a minimum of trouble, a regular inspection and maintenance procedure should be followed. Periodic lubrication, inspection of the brushes and commutator will insure normal operation and life to all parts. The disassembly of the cranking motor at stated intervals for a thorough overhaul is recommended as a safeguard against failure from accumulations of dust and grease, and abnormal wear of parts. The battery and external circuit must be kept in good condition. Defective cables, loose or corroded connections, and defective switch contacts must be checked for and eliminated when found. Any of these conditions will result in poor cranking motor performance.

NORMAL CRANKING MOTOR MAINTENANCE

LUBRICATION

All bearings provided with hinge cap or ball type oilers should have 8-10 drops of light engine oil every 100 hours. Grey iron or bronze bearings with grease cups should have the grease cups kept filled with medium cup grease and turned down one turn every 50 hours. Ball bearings with grease cups should have the grease cups kept filled with ball bearing grease and turned down one turn every 100 hours. Oil plugs should be removed every 6 months and the reservoir packed with graphite grease. Do not lubricate excessively, since excessive oiling may cause oil and grease to gum on the commutator and reduce the cranking ability of the motor. Never oil the commutator. On some models oil wicks are used for lubrication of the center or drive end bearing. The wick is saturated with oil before assembly. Whenever the cranking motor is removed from the engine, the oil wick should be saturated with oil before the unit is reinstalled. All oilless type bushings should be supplied with a few drops of light engine oil. Lubricate cranking motor drives with a few drops of light engine oil. *Avoid excessive oiling.*

INSPECTION

The cover band should be removed and the commutator and brushes inspected at regular intervals. The frequency of the intervals will be determined by the type of cranking motor as well as the operation. Frequent starts, excessively long cranking periods, due to a hard-to-start engine, and excessively dirty operations, all will require that the inspection periods be more frequent. Generally speaking, cranking motors should be inspected every 500 hours of operation.

COMMUTATOR

If the commutator is dirty, it may be cleaned with a strop of No. 00 sandpaper. NEVER USE EMERY CLOTH TO CLEAN COMMUTATOR. All dust must be blown from the cranking motor after the commutator has been cleaned. If the commutator is rough or out of round, or has high mica, remove the unit from the engine, and disassemble the armature. Turn the commutator down in a lathe, removing only sufficient material to true up the commutator and remove roughness and high mica.

BRUSHES

Replace worn brushes. If brushes wear rapidly, check for excessive brush spring tension and roughness or high mica on the commutator.

YEARLY CHECK

At intervals of about once a year, the length of time depending upon the type of service and the operation, the cranking motor should be removed from the engine and completely disassembled. Where machine is engaged in an excessively dirty operation, this disassembly should be made with greater frequency, and particular attention should be given to keeping the cranking motor drive clean. All parts should be cleaned after disassembly. Do not clean the armature or fields in any degreasing tank, since the compounds used in this type cleaner may cause damage to mica or enamel insulation and rubber. All worn parts should be replaced. Check the brush holders to make sure they are free on their pivot pins. The commutator should be trued in a lathe. All connections should be carefully checked and resoldered if necessary. Use rosin flux in making soldered connections. Never use an acid flux on electrical connections. Submit the reassembled unit to a No-Load and a Torque test.

BATTERY

The storage battery is located in the compartment under the operator's seat.

KEEP BATTERY TERMINAL CONNECTIONS CLEAN AND TIGHT. Coating the terminals with vaseline will prevent corrosion.

Be sure the battery is held securely in place by the hold-down frame. Do not use excessive force when tightening the hold-down nuts, to avoid danger of breaking the container.

TO ADD WATER TO BATTERY

1. Unscrew filler cap.
2. Force filler cap down over the vent tube thus forming an air lock in breather chamber.
3. Add distilled or approved water until it is near the top of the filler well.
4. Remove filler cap from vent tube and solution will then drop to correct level
5. Screw cap in filler well.

The proper electrolyte level is ⅜" above the top of plates.



GENERAL BATTERY CARE—TO BE CHECKED EVERY TWO WEEKS

1. Test battery with hydrometer.
2. Check electrolyte level. Excessive use of water indicates too high a charge rate. (Check generator regulator setting.)
3. Be sure all connections are clean and tight.

FRONT AXLE

Keep spindles and all working parts on front axle greased as per lubrication chart. Keep all nuts and bolts tight.

TIRES

Maintain tire pressure on tires at all times as follows:

Front—80 Pounds Rear—25 Pounds

FRONT WHEELS

The bearings in the front wheels are adjustable type Timken tapered bearings and should be kept in adjustment. (See Fig. 1)

To adjust bearings, jack up the front wheel, remove the three cap screws which hold the hub cap in place. Remove the hub cap and cap gasket. Remove locking nut and nut lock. After removing adjusting lock draw up adjusting nut snugly, or until considerable drag is felt when rotating the wheel. Now turn the nut back about one-sixteenth of a turn and reassemble the adjusting lock 4, nut lock 3, and locking nut 2. Check the adjustment after the above parts are replaced to be sure there is no excessive drag on wheel which would mean that the bearings are too tight. If there is play in the bearings this indicates that the bearings have not been properly adjusted and should again be tightened. After the proper adjustment has been reached be sure that nut lock is bent over one of the "flats" of lock nut. Repack with grease. Replace hub cap and gasket.

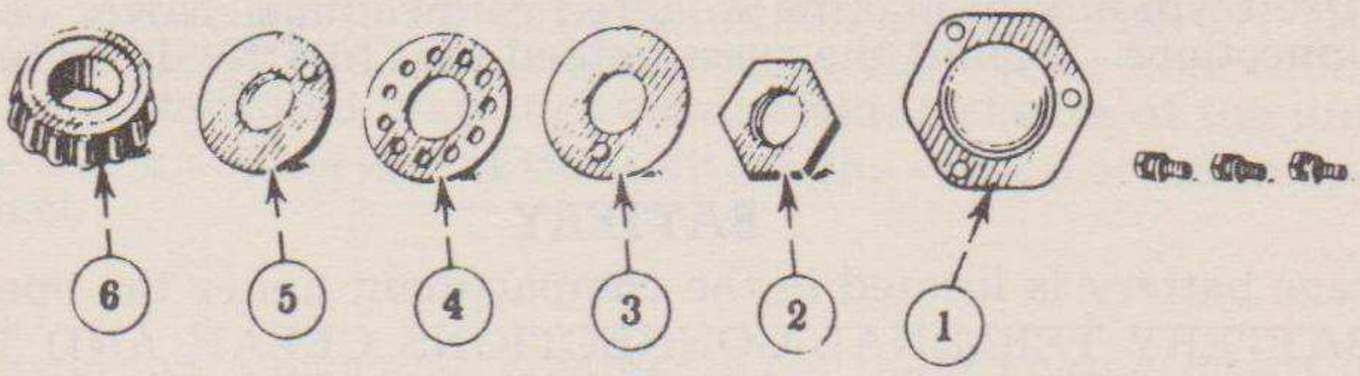

Fig. 1—Wheel Bearings—Front.

ADJUSTMENT OF STEERING (Fig. 2)

The control of steering is adjusted as shown in the following instructions and any desired speed control can be obtained.

Turn "A" up or down as required until speed of steering to the left is satisfactory. Then loosen jam nuts and turn them up or down until steering to the right is satisfactory. In making the above adjustments it is necessary to make trial turns with the steering wheel. After the desired steering speed is obtained, securely tighten jam nuts, and small nut at top of stud "B".

STEERING GENERAL

Keep nut on lower end of vertical steering shaft, securing lower steering arm tight at all times. Grease all fittings as indicated in lubrication. Do not overlook greasing both the upper and lower bearings on the vertical steering shaft.

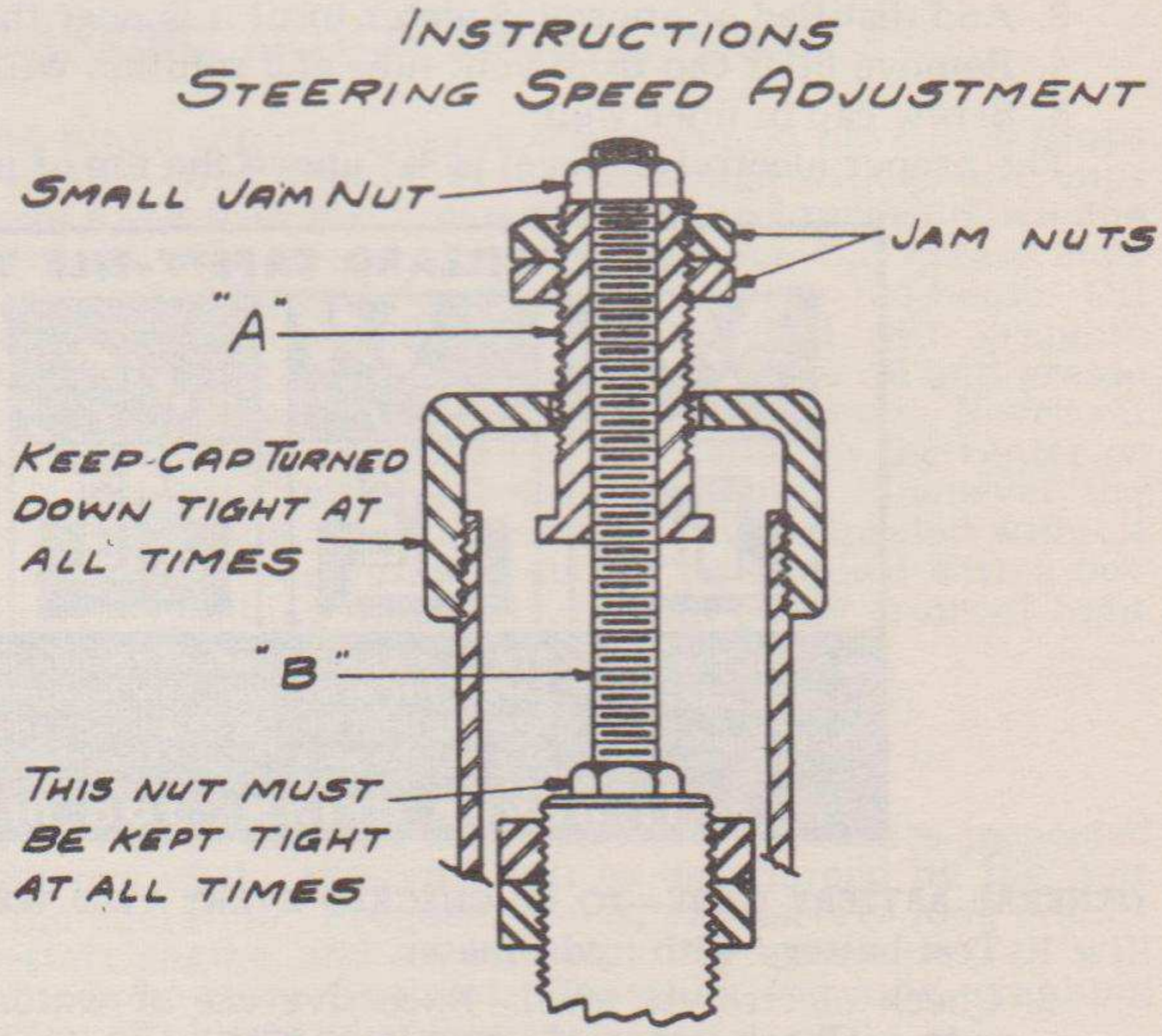

Fig. 2—Steering Adjustment

SCARIFIER ADJUSTMENT

Hang rods—Adjustable pin type are provided. Male and female section slide fit for adjusting depth of cut or clearance when raised.

Grease all bearings and ball caps through fittings provided for this purpose and keep all nuts and bolts tight.

BALL CAP ADJUSTMENT

Shims under ball cap are provided for adjustment to take up wear and ball caps should be checked at regular intervals to be sure they are properly seated and that there is no play in their action on the ball studs. Shims provide fine adjustment—or if all shims have been removed and ball joint still shows signs of "play" adjustment can be made by filing material from the face of the ball cap or from the face of the corresponding part of the ball joint connection.

SHIMS are also provided for adjustment of scarifier lift shaft and may be removed as required. Bearings on lift shaft are replaceable in pairs. Each pair consisting of two half sections. In replacing bearings it may be necessary to add additional shims to make proper adjustment. Be sure all working parts receive proper lubrication.

TEETH

There are 11 teeth to a set. Each tooth has three notches for adjustment. To remove teeth for adjustment or replacement, drive out individual lock pins from bottom which allows the locking notch in tooth to be released and tooth removed.

CLEARANCE

When working in rough or coarse material better clearance for flow of material can be secured by removing all scarifier teeth.

In scarifying "tough" or coarse materials it is sometimes to an advantage to remove alternate teeth.

PITCH ADJUSTMENT

The pitch of the scarifier teeth is automatically adjusted by the depth of the cut and no other adjustment necessary.

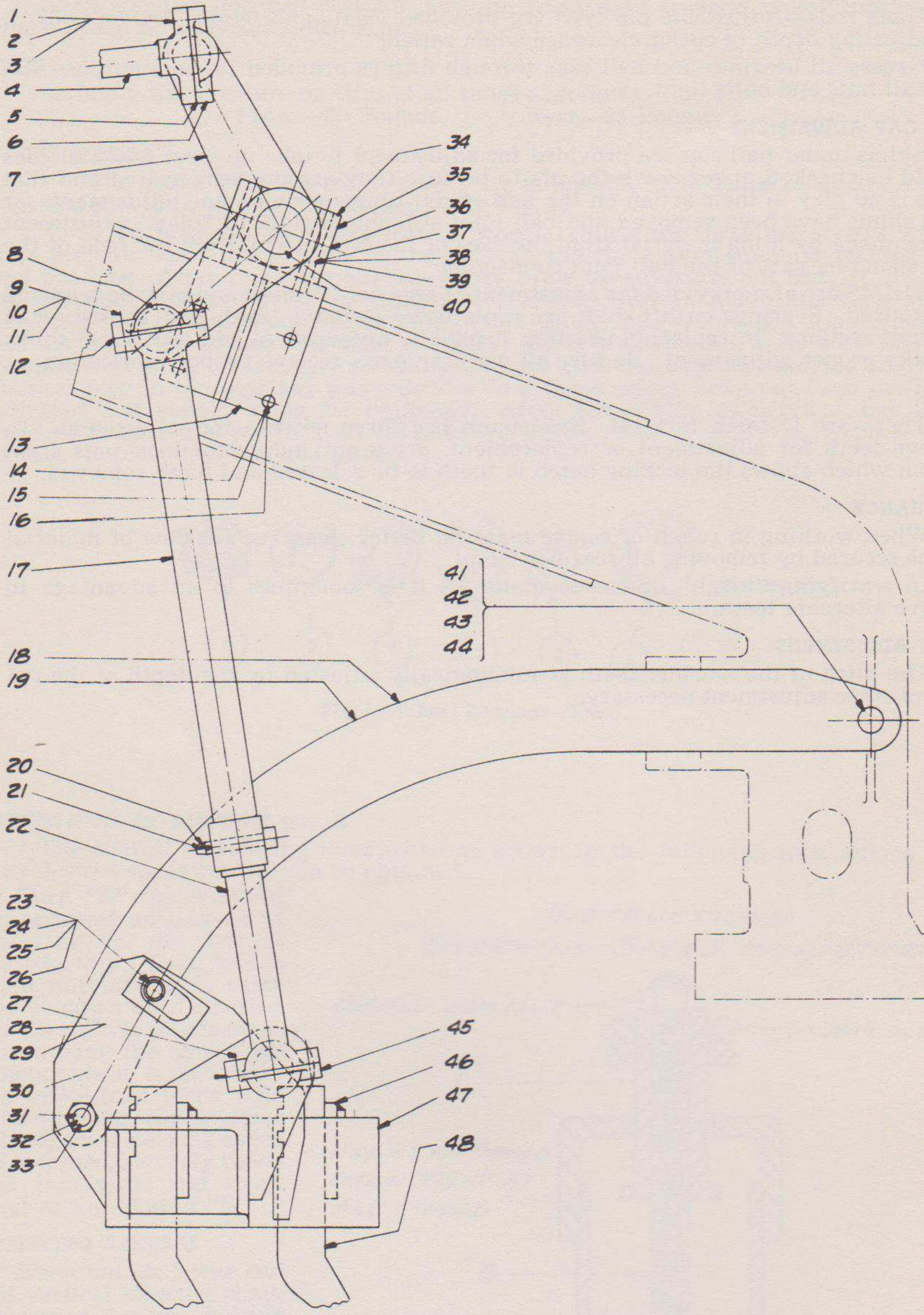

Fig. 1—Scarifier

CIRCLE AND DRAWBARS

The circle is supported on drawbars by (4) circle shoes. The two rear shoes control radial adjustment as well as vertical play and act as circle guides. The two front shoes are for vertical play adjustment only.

RADIAL ADJUSTMENT (Fig. 1)

To adjust circle for side or radial play the check nuts (6) on cap screws (7) should be loosened. Nuts (8) should be loosened just enough to allow shoe to slide as adjustment on cap screws is made. Turn cap screws (7) in (to right) to tighten adjustment.

Always make equal adjustment on both shoes or circle will be thrown out of center and bind on front shoes. Be sure teeth in circle mesh properly with teeth in circle reverse pinion. After adjustment has been made, tighten nuts holding shoe and lock nuts on cap screws.

This adjustment is properly set at factory and adjustments need only be made to take care of wear should play become noticeable. Care should be exercised and checks made to see that the circle rotates freely.

VERTICAL ADJUSTMENT (Fig. 1)

This adjustment is provided to compensate for any wear that might occur. Care should be exercised in making this adjustment not to remove too many shims which would cause the circle to bind.

Adjustment is made by removal of shims from under front and rear (4) shoes.

Remove only one at a time until all four have been adjusted.

A good grade of heavy oil or light grease properly placed on the circle reverse slide where it contacts the frame and shoes, and also on the teeth will provide free movement and prevent undue wear. This should be greased daily.

MOLDBOARD ADJUSTMENT (Fig. 2)

Pitch—provision is made for adjusting moldboard pitch to a suitable angle for work being done. Adjustment is made by removing bolts which secure adjusting brackets (1) to circle knees and tilting moldboard to required pitch and replacing bolts in hole selected in the adjusting bracket. Tighten nuts and bolts securely. Pitch adjustment should be made to keep material rolling along moldboard.

Lateral Adjustment—For extreme reach on wide shoulder cuts or on high banks the moldboard may be shifted to any set of attaching lugs provided for this purpose.

DRAWBAR BALL AND SOCKET DRAFT CONNECTION (Fig. 3)

This is the front connection of drawbar to frame head block of grader. Shims are provided for taking up any wear incident to service. Nut on the threaded end of the ball stud should be kept tight at all times. Lubricate this connection through fitting provided.

CIRCLE REVERSE CASE (Fig. 2)

Grease circle reverse case (3) and bushings through fittings provided and keep all bolts and nuts tight.

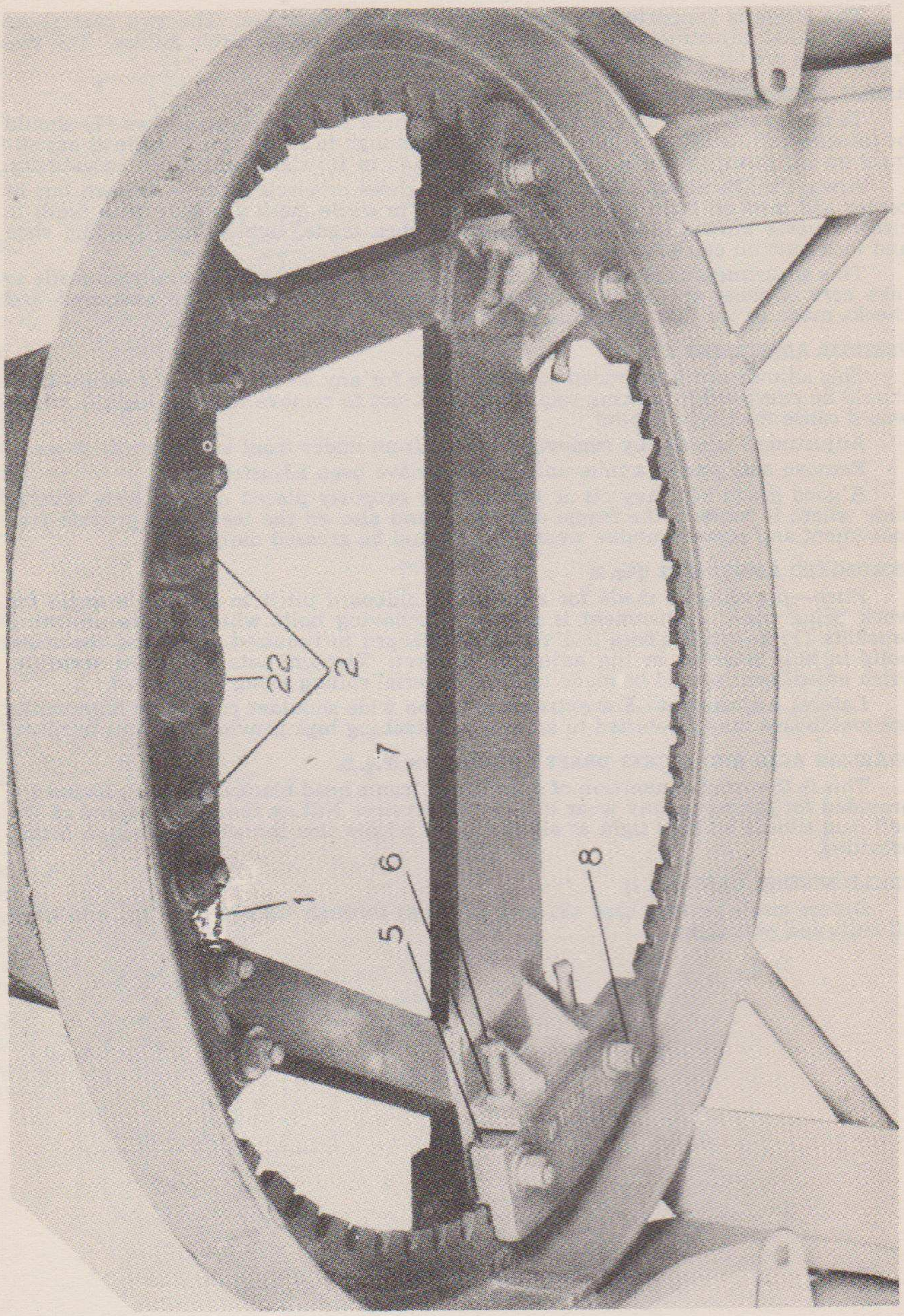

Fig. 1—Circle Adjustment

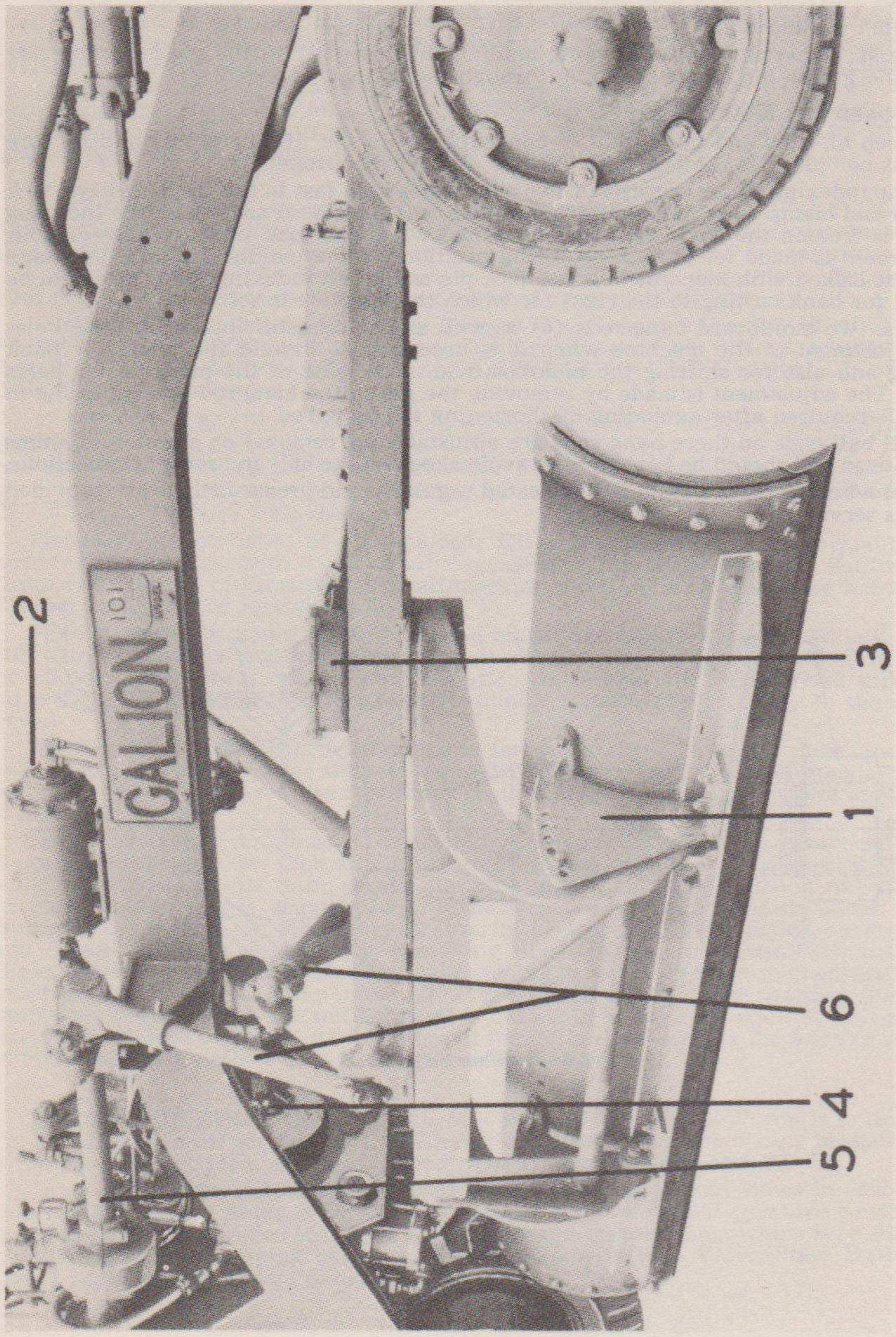

Fig. 2—Location of Moldboard Operating Parts

HYDRAULIC OR FLUID MOTOR (Fig. 2)

The Hydraulic or Fluid Motor (2) requires no special attention other than occasional check to see that all nuts and bolts are tight and hose connections are not loose.

SIDE SHIFT CASE (Fig. 2)

Be sure that the attaching bolts holding this case (4) to the grader frame are tight and grease the entire assembly through the fittings provided.

MOLDBOARD LIFT SHAFTS (Fig. 2)

Keep all nuts and bolts tight in connection with the lift shafts (5) and be sure there is no "play" in the bearings. Grease all bearings properly.

The indexing turret consists of two side plates held fast to the shaft by keys, lock screws and clamp bolts. The lift arm which forms the center section of the indexing turret is free on the shaft and can be rotated when the lock pin is removed. This adjustment is made for certain operating positions of the moldboard. The left hand turret is locked with machine bolt and lock pin as the left indexing turret need not be moved for bank cutting to the right for which the machine is set.

The two moldboard hang rods (6) as well as the side shift hang rod have holes for adjustment of the machine when it is necessary to extend the blade for bank cutting and also for shifting the moldboard to either side of the machine for berm work. The adjustment is made by removing the pin in the hang rod and replacing in the hole required after extending or shortening the hang rod.

All ball caps on these hang rods are adjustable by removal or addition of shims as required and should be kept tight to avoid shock on the ball and socket connections.

All working parts should be lubricated regularly and grease fittings are provided for this service.

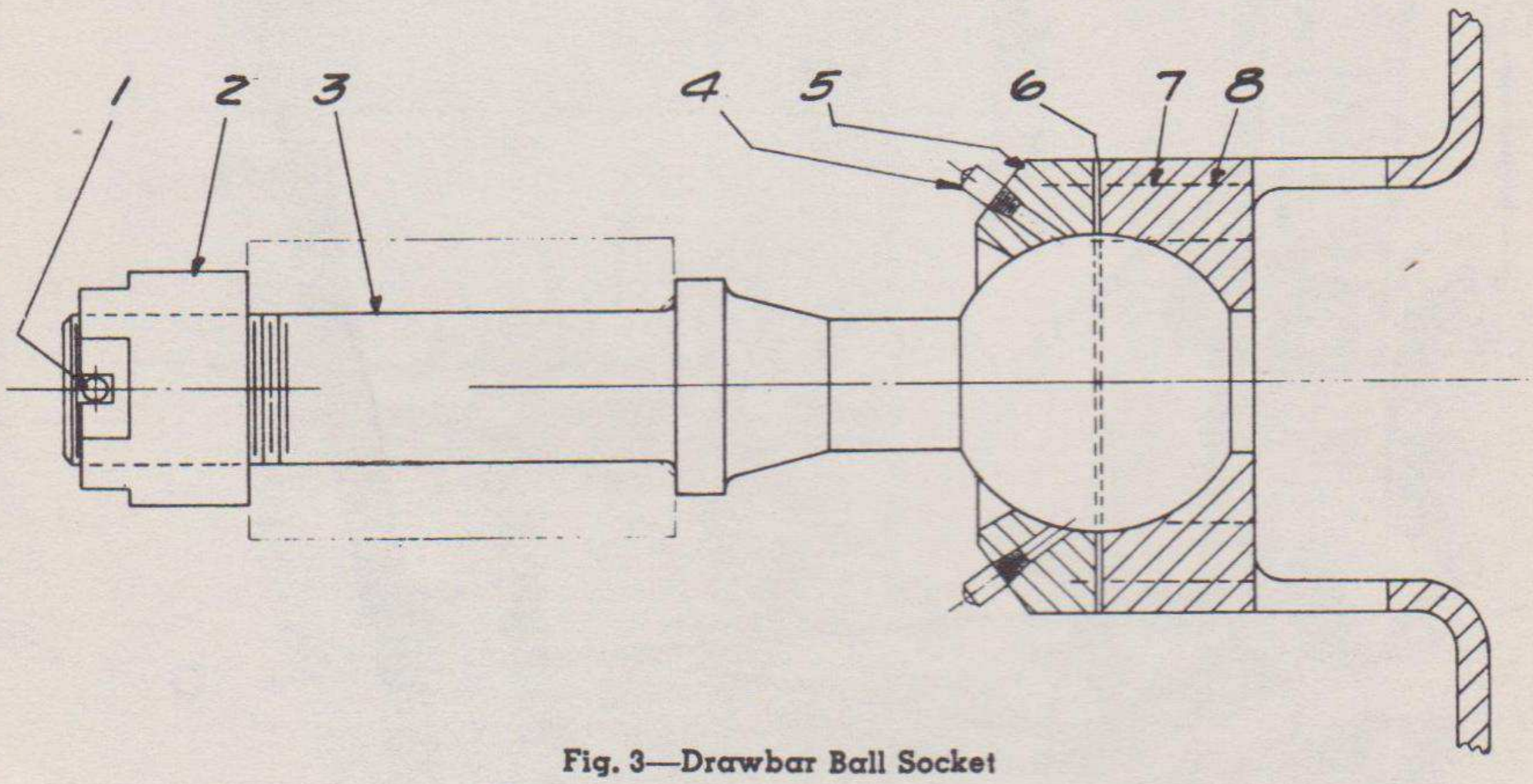

Fig. 3—Drawbar Ball Socket

HYDRAULIC SYSTEM

1. The principal of the Hydraulic System is comparatively simple in operation. The complete operation of the hydraulic control consists of the flow of hydraulic oil through the various controls, cylinders and hydraulic motors. The oil is taken from the supply tank through the pump, from where it is forced under pressure through the manifold to the cylinders for the proper operation selected. From the cylinders the oil again passes through the return section of the manifold back to the supply tank. During the time that the pump is in operation and controls are not being used or piston has reached the end of its stroke the hydraulic system is protected by a relief valve or by-pass valve which by-passes the oil back to the supply tank.

2. For the efficient operation of the Hydraulic System it is HIGHLY IMPORTANT to keep the filter screen, which is located in the oil supply reservoir under the operator's seat, clean at all times. This screen should be removed for inspection and cleaned every day for the first thirty days and semi-weekly thereafter. To remove filter grasp by top and turn out of seat, clean and replace. See Figure 1.

If this screen is allowed to become clogged it will restrict the flow of oil causing PRESSURE TO DROP with resultant slowing of speed of various adjustments; PUMP FAILURE: SLIPPAGE AND UNDUE WEAR ON THE HYDRAULIC PUMP DRIVE BELT. See Figure 1.

3. HYDRAULIC OIL: The hydraulic oil supply tank is located under operator's seat. Capacity of tank being 10 Gallons. Capacity of entire system 17 Gallons. Maintain level of oil two inches below tank top. Drain tank and clean seasonally. To drain system remove drain plug in bottom of tank. DO NOT USE BRAKE FLUID IN THE HYDRAULIC SYSTEM.

General characteristics of oil required: Oil only, clean and of good quality, is recommended for use with the hydraulic system, for the reason that the fluid being pumped is a source of lubrication for all working parts. The oil should be kept free of water or any other foreign matter.

No compound or "dope" should be used on fittings unless it is selected and used with care. It must be applied very sparingly so that none of it will be pushed into the oil passage where it can be detached after hardening and then carried through the system. To safeguard against such possibility, always apply it only to the male thread.

There are no priming provisions made for the Vickers Pump as these are unnecessary, as they will prime themselves under ordinary working conditions at very high lifts. Special cold weather conditions require an oil having a pour point as listed on lubrication chart.

Air leaks in the pump intake connection will cause the pump to operate with an irregular snapping noise. The air thus drawn into the system will be carried to the cylinders, and often will cause erratic jumping movements of the piston rod. Since the pump intake line is usually the only part of the hydraulic system under subatmospheric pressure, air leaks may ordinarily be traced to some fitting connection in it. Often leaks may be located by spreading oil over each joint successively with an oil can while the pump is operating, and listening meanwhile for a momentary cessation of the abnormal pump noise. The noise will cease if the leaking joint is completely covered with oil, until this oil is drawn in or runs off again so that air is once more allowed to enter. Always inspect the oil in the reservoir for foam or small air bubbles if this method does not show results.

HYDRAULIC PUMP (Fig. 2): Function of the Vickers Vane Pump is to deliver a given amount of oil per minute to the hydraulic system at any working pressure up to 1,000 lbs. per sq. inch. *We recommend pressure between 350 and 400 lbs.*

In operation, the slotted rotor driven by a splined shaft, and vanes in each slot slide radially as the Rotor revolves. Centrifugal force and fluid pressure cause the Vanes to follow the inside contour of a hardened and ground Ring, which is so shaped that two opposing pumping chambers are formed with side Valve Plate Bushings having ports for intake and exhaust of oil.

CAUTION
HYDRAULIC SYSTEM

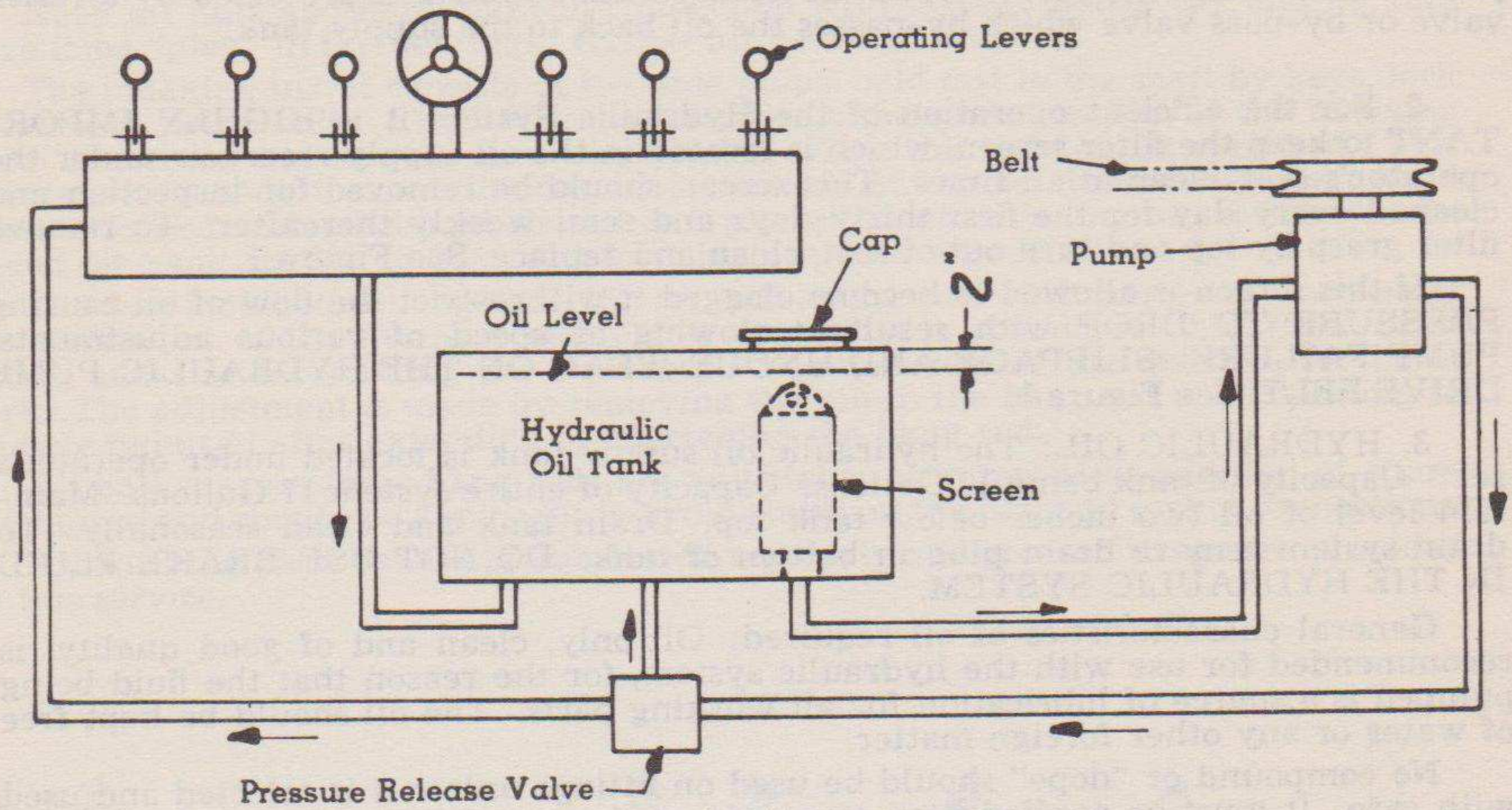

DO NOT run engine if hydraulic system fails for any reason to operate. Immediately check the following instructions.

No. 1 Remove cap from oil tank under L.H. seat cushion, reach down in the oil and turn out screen. Lift out with middle finger. Clean screen and replace. This should be done daily. Drain all oil and clean tank seasonally.

No. 2 Keep oil at proper level which is 2" below top of tank. See diagram above.

No. 3 Check pressure release valve as per instructions given in your Galion instruction book.

No. 4 See that all connections leading to and away from pump are tight. Air drawn into the section side of pump will cause noise in pump and pressure release valve.

No. 5 Grease pressure fitting on hydraulic pump with one stroke of gun daily.

No. 6 See that hydraulic pump drive belt does not slip on pulley.

No. 7 Do not put more tension on hydraulic pump drive belt than is necessary otherwise unnecessary strain on pump bearing will result.

Fig. 1

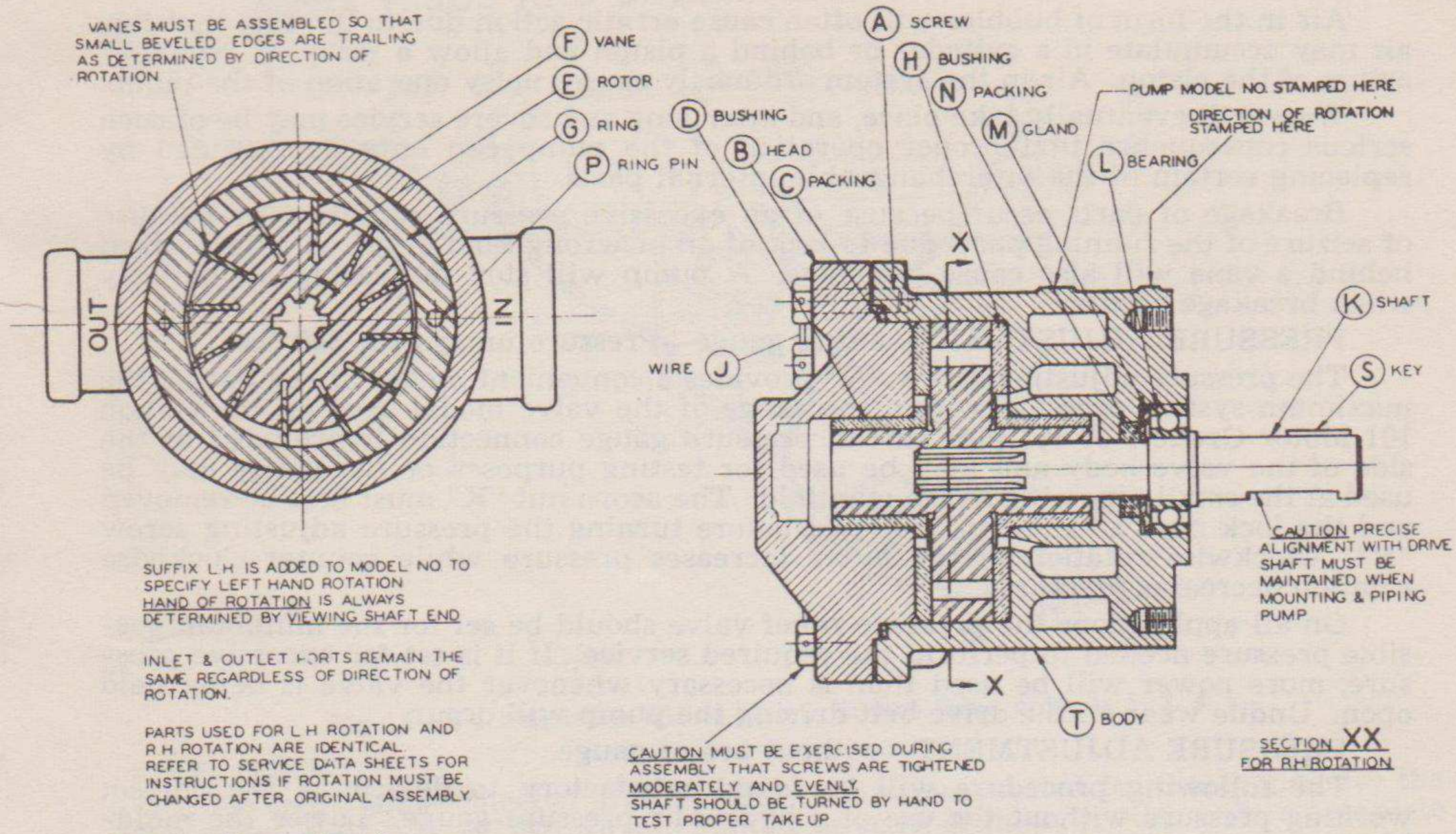

SUFFIX L.H. IS ADDED TO MODEL NO. TO SPECIFY LEFT HAND ROTATION
HAND OF ROTATION IS ALWAYS DETERMINED BY VIEWING SHAFT END

INLET & OUTLET PORTS REMAIN THE SAME REGARDLESS OF DIRECTION OF ROTATION.

PARTS USED FOR L.H. ROTATION AND R.H. ROTATION ARE IDENTICAL. REFER TO SERVICE DATA SHEETS FOR INSTRUCTIONS IF ROTATION MUST BE CHANGED AFTER ORIGINAL ASSEMBLY

Reproduced by courtesy of Vickers Incorporated, Detroit

Fig. 2—Hydraulic Pump

Head take-up screws must not be tampered with except when tearing down pump and reassembling. The repair operations are covered under "Service Information." The head screws are correctly adjusted at the factory under actual operation, and should they be tightened the pump may be caused to seize due to internal binding action. The clearance opening around the pump head is normal.

Adjustments: There are no adjustments required. Shaft packing is not subjected to pressure, and normally does not require replacement. Vanes automatically compensate for any normal wear.

RELIEF VALVE (Fig. 3)

FUNCTION—The primary function of these valves is to limit the maximum operating pressure in the hydraulic system to any desired adjustable figure within the range of the valve. Oil from the system is discharged from the "return" connection of the valve to the tank whenever pressure builds up the required setting for which the valve is adjusted. This discharge prevents further build up of pressure, and the valve thus limits the system pressure to the desired maximum.

The relief valve is located under the operator's platform on the left hand side of the grader, and its purpose is to regulate the pressure required on the hydraulic system and by-pass the oil when operating valves are closed or pistons in cylinders have reached the end of their stroke.

To regulate the pressure required on the hydraulic system, remove the acorn nut, and turn the adjusting screw in or out (in to increase the pressure, out to lower the pressure) Release hex nut "L" when making this adjustment.

If this valve should stick in a certain position, the hydraulic system would not operate correctly. This is caused by some particle of foreign matter around the spool "R" or owing to the close fit on these parts, some of the valves may stick, until they are properly seated. Ordinarily this close fit is correct, in that after a few weeks of operation the tightness has worked out, and a very fine fit has resulted.

In case the relief valve fails to operate it may be cleaned as follows: Remove the parts K, L, M, N, P, Q, also remove cover C after cover C has been removed plug the small by-pass hole in the body with a small wooden plug to avoid the loss of oil while checking piston. This will allow you to touch the spool "R" with your little finger, and move the spool in or out and it can also be rotated. In most cases this will correct the valve trouble. However, if this does not correct the trouble refer to the "Service Manual" for further instructions. In checking the valve as above be sure the engine is not running.

General Causes of Improper Operation: Dirt will usually be found to be the cause of most difficulties, due to carelessness on the part of someone when refilling the reservoir or making repair on the hydraulic system.

Air in the form of bubbles will often cause erratic action due to the fact that this air may accumulate in a cylinder or behind a piston and allow a jerky or "spongy" action of the piston. Air in the system ordinarily causes noisy operation of the pump.

Wear will eventually take place, and after long and severe service may be of such serious consequence that proper operation of the pump can only be regained by replacing certain of the interchangeable internal parts.

Breakage of parts occur because of an excessive pressure condition or because of seizure of the running parts due to lack of oil or wrong kind of oil. A chip wedged behind a vane will also cause breakage. A pump will stop delivering oil entirely when breakage occurs.

PRESSURE ADJUSTMENT—using gauge—Pressure on system 350 lbs.

The pressure adjusting screw "N" provides a convenient means of regulating the maximum system pressure within the range of the valve model used on the Galion 101 Motor Grader. A ¼" pipe thread pressure gauge connection is provided at the side of the valve body and may be used for testing purposes or the gauge may be used at the small pipe plug in the manifold. The acorn nut "K" must first be removed and the lock nut "L" must be loosened before turning the pressure adjusting screw "N". Clockwise rotation of the latter increases pressure while counter-clockwise rotation decreases pressure.

On all applications the pressure relief valve should be set for the minimum possible pressure needed to perform the required service. If it is set for excessive pressure, more power will be used than is necessary whenever the valve is being held open. Undue wear on the drive belt driving the pump will occur.

PRESSURE ADJUSTMENT—without use of gauge.

The following procedure will be found satisfactory to determine the correct working pressure without the use of a hydraulic pressure gauge. Lower the moldboard and place it at right angle with the grader; set the pressure to the point where the front wheels start to raise off the ground. This setting is made while exerting downward pressure on the moldboard through both cylinders at the same time.

This adjustment can be made as follows: Have someone operate the two blade control valves, forcing the blade down, while you adjust the pressure screw at the relief valve. To adjust this screw remove acorn nut, release hex nut "L" and turn the adjusting screw In to increase pressure and Out to lower the pressure.

Do not set pressure too high. The above adjustment will be found correct for all work. You cannot operate the grader if there is too much pressure on the system and the front wheels are raised off the ground.

HYDRAULIC CYLINDERS

The hydraulic cylinders need no special attention other than a check to be sure all nuts and bolts are tight and regular use of grease on the bearings and ball caps.

Reproduced by courtesy of Vickers Incorporated, Detroit

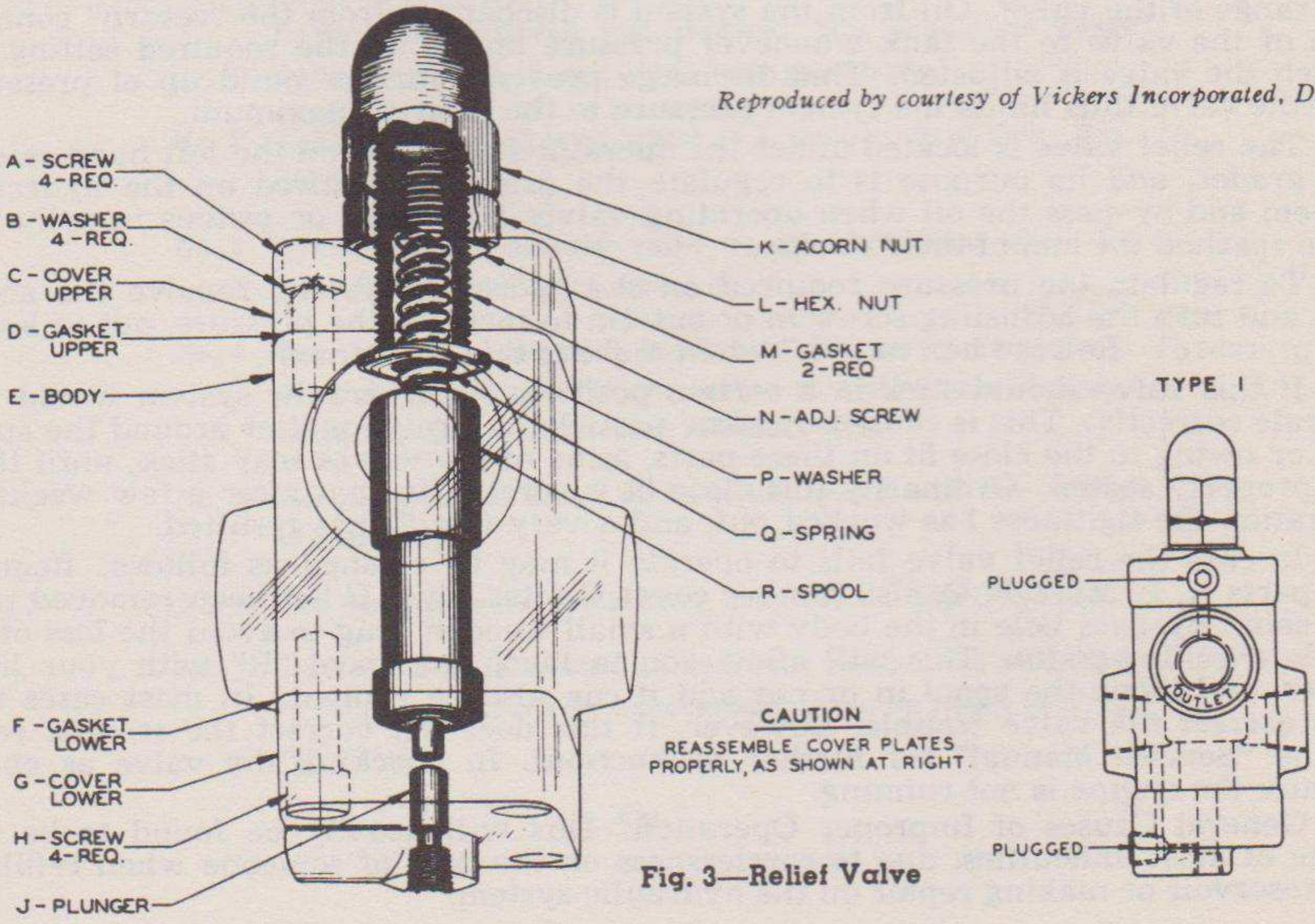

Fig. 3—Relief Valve

OVERDRIVE, TRANSMISSION AND TANDEM DRIVE

No special instructions can be given the operator on these units except the instructions regarding lubrication as listed on the lubrication chart.

If oil leaks are noticeable around axles or shafts the leak should be checked at once and the cause determined. If an oil seal is leaking it should be replaced at once to avoid loss of oil and damage to unit.

After machine has been in operation a few weeks it is advisable to again thoroughly tighten the 4 wheel axle nuts.

990620 O—52——5

HYDRAULIC BRAKES

The Hydraulic brake system used to actuate the brake mechanism consists of a box type master cylinder in which the hydraulic pressure is originated; individual wheel cylinders in both of the double drive rear wheels, in which the hydraulic pressure is applied, which serve to actuate the brake shoe against the brake drum of these wheels; and the lines, consisting of tubing, flexible hose, brackets and unions, interconnecting the master cylinder and wheel cylinders. The master cylinder and wheel cylinders are fitted with pistons, all of which are provided with rubber cup packings, which act as a seal to maintain pressure and prevent loss of brake fluid.

Depressing the brake pedal moves the piston within the master cylinder thus displacing the brake fluid from the master cylinder through its outlet orifices, through the tubing and flexible hose connection into the wheel cylinders. The brake fluid being noncompressible, enters each of the wheel cylinders, causing the cylinder pistons to move outward and actuate the brake shoes. As pressure is increased on the pedal greater hydraulic pressure is built up within the wheel cylinders, and consequently greater force is exerted by the shoes against the brake drums.

When the pressure on the pedal is released, the brake shoe retracting springs return the brake shoes to their normal or released position. The return movement of the brake shoes, in turn causes the brake fluid to be forced back to the master cylinder through the tubing and hose.

HYDRAULIC FLUID

Always use Genuine Wagner Lockheed brake fluid. The use of substitutes or the introduction of mineral base oil into the system will cause rubber parts to swell and become inoperative.

MASTER CYLINDER CHECK VALVE

The master cylinder employs a double check valve held in the closed end of the cylinder by the piston cup return spring. The function of this valve is to seal the cylinder to prevent air entering the system during the bleeding operation. The construction of this valve is such that fluid may be displaced into the lines at a very low pressure.

Fluid passed through the valve on the pressure stroke can return into the master cylinder by raising the entire valve from its seat. When pressure on the returning fluid drops to below 6 to 8 pounds, the spring pressure seats the valve and the system is held under a slight pressure which serves as a seal to prevent gravity seepage. This valve has no relative to pedal movement. Do not try to improve pedal reserve by changing the valve.

MINOR SHOE ADJUSTMENT

This adjustment is intended to compensate for normal lining wear and is made in the same manner on all types of wheel brake units. Lining wear is indicated by pedal going almost to floorboard of cab, reducing brake effectiveness and requiring adjustment to re-establish pedal position.

Adjust lining clearance by rotating the cam adjustment toward rim of wheel with wrench pointing upward. This brings the shoe into closer contact with the drum. Use feeler gauge in slotted backing plate. Four slots are provided in each back plate for adjustment. Shoe is adjusted to .005 clearance at the lower end of the shoe and .010 at the upper end.

Adjust the adjusting cam until feeler gauges are snug between lining and brake drum. Repeat this operation at each wheel brake.

MAJOR ADJUSTMENT

If minor adjustment fails to provide a satisfactory brake and it is necessary to readjust the eccentric anchor pins, or if new brake linings have been installed, follow the procedure outlined in "Service Manual."

BRAKE ADJUSTMENT

The Lockheed brakes have provisions for minor and major adjustments. Minor adjustment compensates for lining wear. Major adjustment becomes necessary when a minor adjustment will not provide a satisfactory brake or when brakes have been dismantled, shoes relined or replaced. Also when drums have been reconditioned. A satisfactory adjustment cannot be obtained when linings are worn to rivet heads, brake drums are scored, or worn, eccentric or bell-mouth.

Never replace or reline shoes on one wheel only as it is of utmost importance that linings on both wheels have the same coefficient of friction, otherwise unequal brakes will result.

BRAKE INSPECTION

Check fluid level in master cylinder, making sure that all dirt is removed from around filler plug to prevent entrance to cylinder pressure reservoir. Level should be ½" from reservoir top or cover. Check pedal to make certain it has free play or lash before pressure stroke starts.

Check pedal for binding on shaft or against frame—lubricate if necessary. A mixture of engine oil and graphite is usually satisfactory for pedal mounting and rod clevises. Be sure pedal returns sharply to "off" position; if not check and replace pedal return spring if necessary.

BRAKE PEDAL ADJUSTMENT

Proper pedal adjustment is important, otherwise the compensating feature of the master cylinder cannot function. Fluid cannot return from the lines. Brakes will drag after several applications if master cylinder port is blocked.

It is imperative that master cylinder piston be against its stop and that pedal link rod be adjusted for clearance between the pedal and master cylinder control arm. There should be at least ¼" to ½" free play or lash in pedal before the pressure stroke starts. Greater free play or lash reduces the effective travel of master cylinder piston which in turn reduces brake efficiency.

Pedal reserve should be approximately half of the total pedal travel.

If pedal is found spongy or not solid, this is an indication of air in the system and the brakes should be bled.

BLEEDING THE HYDRAULIC BRAKE SYSTEM

Since the proper operation of the hydraulic brake system requires a "solid column" of fluid (without air bubbles) at all points in the pressure system—it becomes necessary under certain conditions to "bleed" fluid from the system in order to expel air bubbles which have become mixed with the fluid.

MANUAL BLEEDING

Care must also be taken not to drain the master cylinder reservoir during this operation, otherwise air will enter and make "re-bleeding" necessary. Reservoir must be full during the bleeding operation.

Remove cap screw from bleeder connection (Fig. 3).

Loosen bleeder screw one full turn and depress the brake pedal slowly, then allow pedal to return to the "off" position. Repeat this operation approximately ten times, which provides a pumping action to force fluid through the lines and expelling all air. This operation must be repeated at both wheels to bleed the entire system.

Watch flow from bleeder connection. When air bubbles cease to appear, or when the stream is a clean solid mass, close bleeder connection.

BRAKE PEDAL TESTS

Following are a few practical tests which can be made by any mechanic. Going through these, will after some experience, enable the mechanic to diagnose quite a few of the ordinary service problems on the hydraulic brake system.

1. Get in cab and push on brake pedal to determine (a) if brake will apply; (b) if there is at least a 2" "reserve" before pedal strikes floor of cab; (c) if pedal goes to floor try "pumping" to see if it will "build up"; (d) if pressure can be built up, hold down hard to see if pressure will leak off; (e) after holding ½ minute, reduce pressure on foot without releasing pedal and then press fairly lightly to see if pedal "leaks down" under light pressure—this test will reveal a master cylinder cup which is thin and permitting pressure to leak off or by-pass within the master cylinder and without showing signs of leaking on the outside of the master cylinder.

2. If pedal goes to floor board and cannot be built up by pumping (pushing down several times in rapid succession) then determine whether master cylinder is full of fluid.

3. If fluid level is low in master cylinder, refill with Lockheed fluid and again make the foregoing pedal tests.

4. If the fluid is OK in the master cylinder and the pedal can be "pumped up" proceed with "minor" brake adjustment.

5. If master cylinder fluid level is found low or master cylinder reserve tank is empty—refill and then before making pedal tests inspect master cylinder for any external signs of leakage. Feel the master cylinder boot to determine if wet with brake fluid; squeeze boot with fingers, if fluid is expelled around or thru boot, it is an indication that the master cylinder is leaking and should be removed, inspected, repaired or replaced.

6. If no evidence of leaks are apparent at the master cylinder—inspect all fluid lines along the frame, all hose and hose connections, the bottom edges of all brake flanges and the inner side wall of tires for signs of brake fluid leakage. If no external signs of leaks are found, but pedal still leaks off under pressure, pull both brake wheels and inspect the wheel cylinders.

7. If no external fluid losses are found but pedal "eases down" under constant but light foot pressure—it is a fairly good indication that pressure is "by-passing" within the master cylinder, in which case remove and repair or replace.

8. If pedal has a "springy" feel—this is usually evidence that the brake shoes are improperly set or have been relined with incorrect thickness of lining. Improper brake shoe setting would indicate need of a major brake adjustment. Before making a decision on this type of condition it is well to road test the grader to determine if you have a "hard" pedal and a "poor" stop. After road test it will be best to pull wheels, check lining thickness, contact, drum condition, fit of shoes to drum and anchor adjustment to determine exact cause of difficulty.

9. If pedal has a "spongy" feel it is usually evidence of air in the hydraulic brake system which condition can be eliminated by "bleeding."

10. If pedal "jams" or binds, check for mechanical interferences, also check to see if piston stop wire in master cylinder is broken; also check master cylinder mountings and linkage.

Refer to "Service Manual" section for further information.

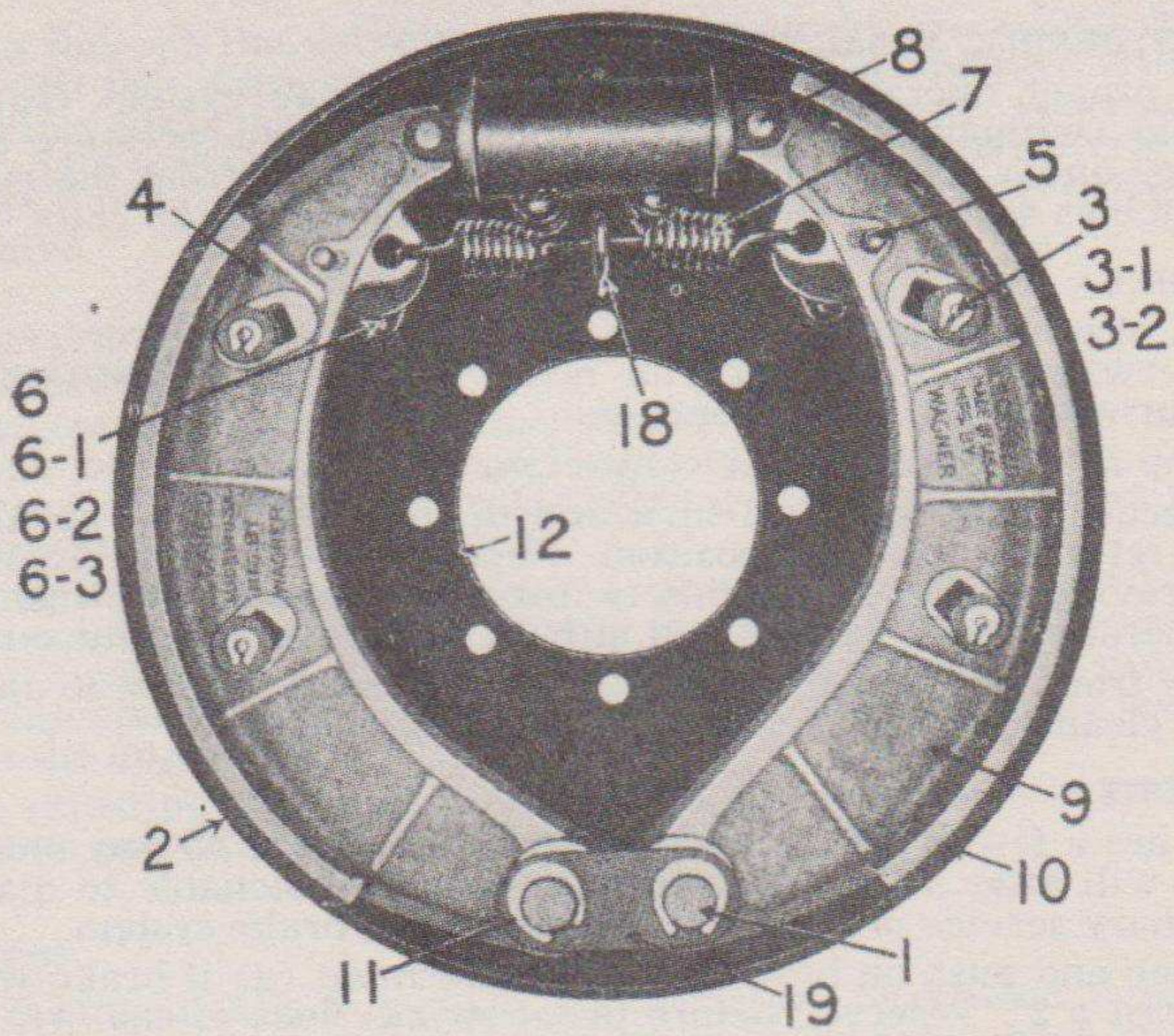

Fig. 1—Wheel Brake

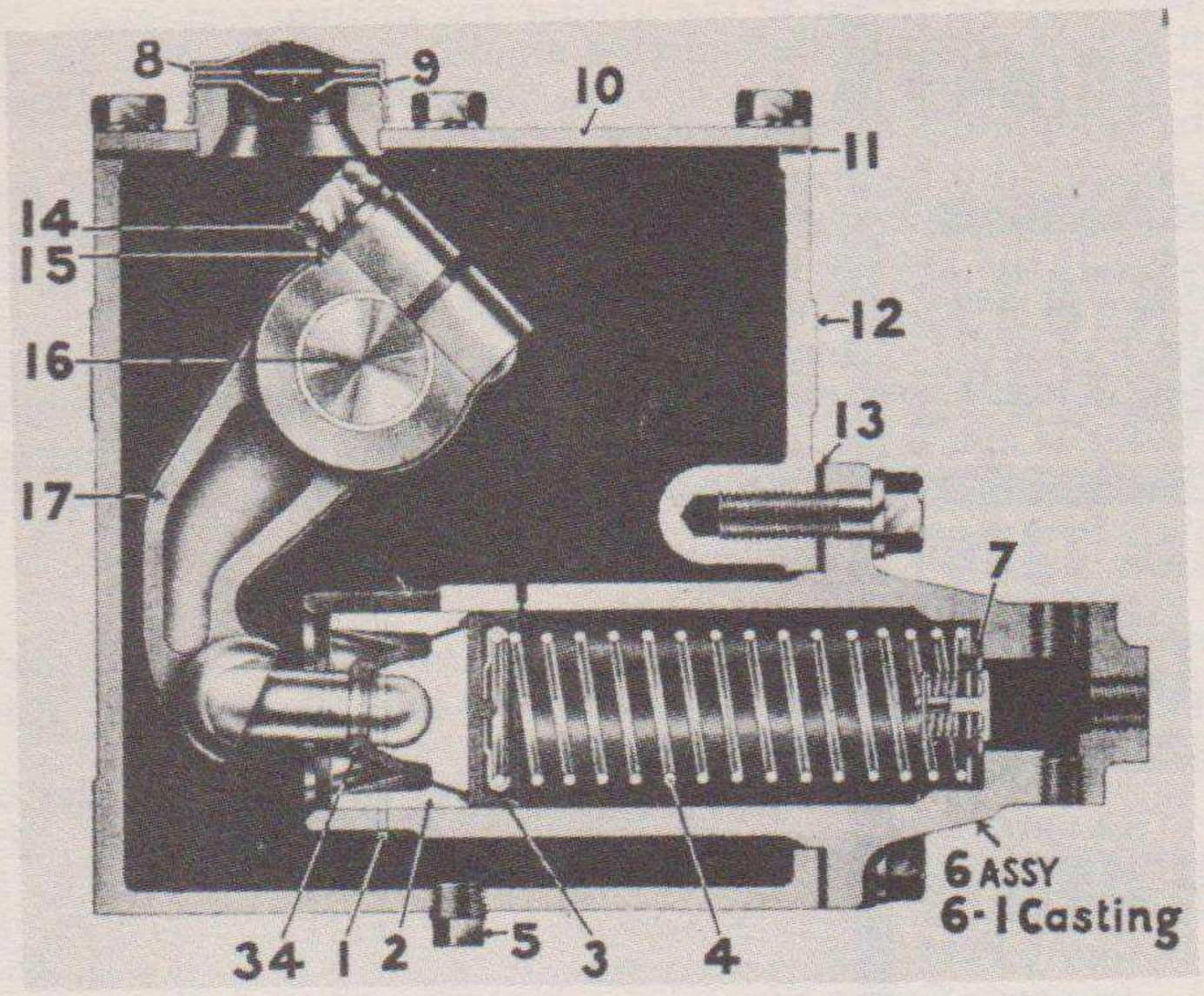

Fig. 2—Master Cylinder

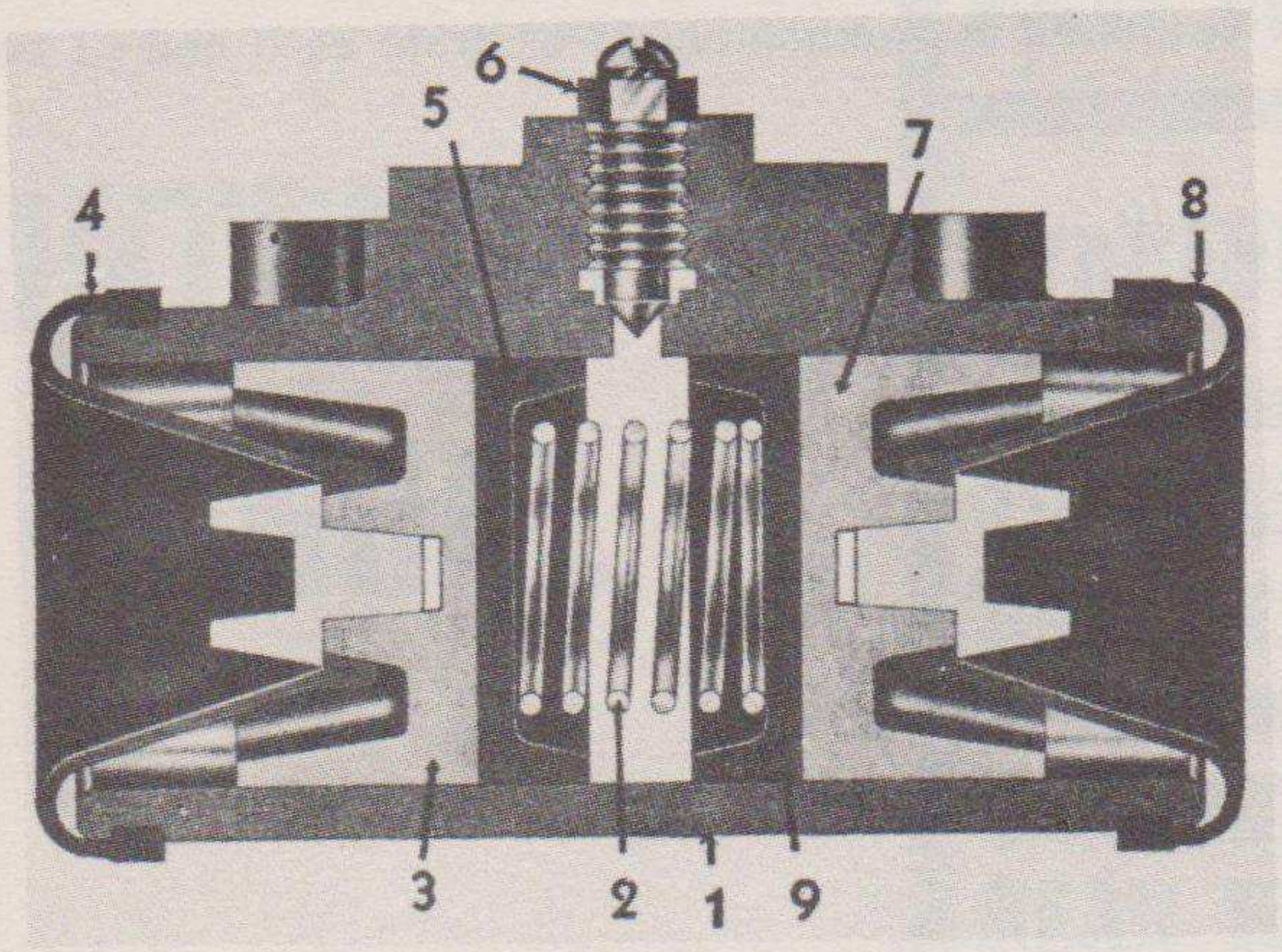

Fig. 3—Wheel Cylinder

STORAGE

No special care need be given to the grader for ordinary storage. If the grader is to be stored in a cold climate the radiator should be checked to be sure there is sufficient anti-freeze solution in the cooling system to prevent freezing or the radiator should be completely drained.

The battery should also be checked to be sure it is fully charged for storage as the battery will gradually discharge while in storage and in cold weather will freeze if not fully charged. If the grader is in storage and battery low it is best to remove the battery and place in some safe place for storage.

The oils in the hydraulic system, etc., will not evaporate; however, the operator should be sure that no moisture has accumulated at any point which might freeze.

Before the grader is again put into operation it should be thoroughly lubricated and checked. Instructions for lubrication are given under the heading of "lubrication" in the index.

HANDLING

The following information on weights, etc., are only approximate and may vary.

Shipment—Two machines can be placed on one 50-foot car. Either packed for export or domestic.
Only one machine can be placed on one car if under 50 feet.

Export Packing and Weight

Length	276"
Width	68"
Height	80"
Cubic Feet	868.8
Approx. Gross Wt.	23,892
Approx. Net Wt.	21,396
Approx. Gross Kilos	10,792
Approx. Net Kilos	9,706

LOADING

Slings should be placed approximately 37½" from each end of box for export loading.

DIMENSION

Length 25' 2" overall.

INDEX

TO

MAINTENANCE MANUAL

CONTROLS	1
ENGINE	2
ELECTRICAL EQUIPMENT	3
FRONT AXLE, WHEELS STEERING AND LEANING WHEEL PARTS	4
SCARIFIER	5
DRAWBARS, CIRCLE, MOLD-BOARD, CONTROL PARTS	6
HYDRAULIC SYSTEM	7
TRANSMISSION AND OVERDRIVE	8
TANDEM DRIVE & REAR WHEELS	9
HYDRAULIC BRAKES	10
LUBRICATION	11
MISCELLANEOUS PARTS	12

INDEX

CONTROLS, INSTRUMENTS AND GAUGES..... 1

CONTROLS, INSTRUMENTS AND GAUGES

INSTRUMENT PANEL as used on P.O. 55441 and PO 55897
Horn Button—Mounted on top of electrical instrument panel.
Lock Switch—Removable key type lock switch which locks the electrical system.
Starter Button—Push button starter switch controlling operation of starting motor.
Ammeter—Charge or discharge rate on battery.
Light Switch—Three toggle switches. First controls headlights and tail light. Second controls rear head light. Third controls top or clearance lights.
Oil Gauge—Pressure of lubricating oil in motor.
INSTRUMENT PANEL as used on PO. PI-2364, PO. PI-2967 and PI-3193
Horn Button—Mounted on top of electrical instrument panel.
Lock Switch—Locks the electrical system—key not removable.
Starter Button—Push button starter switch controlling operation of starting motor.
Ammeter—Charge or discharge rate on battery.
Light Switch—Operated from top of instrument panel. This switch has three positions with lock pin. The first lighting position which controls blackout lights may be made without pushing the lock pin.
1st position—Blackout position.
2nd position—Service position.
3rd position—Service stop light only.
Push in for off position.
Oil Gauge—Pressure of lubricating oil in motor.
Instrument Panel Light.
Clutch Pedal—Left pedal in operator's position as indicated.
Brake Pedal—Right pedal in operator's position.
Gear Shift Lever—At right and at easy reach from operator's position.
Overdrive Shift Lever—At right and front of gear shift lever.

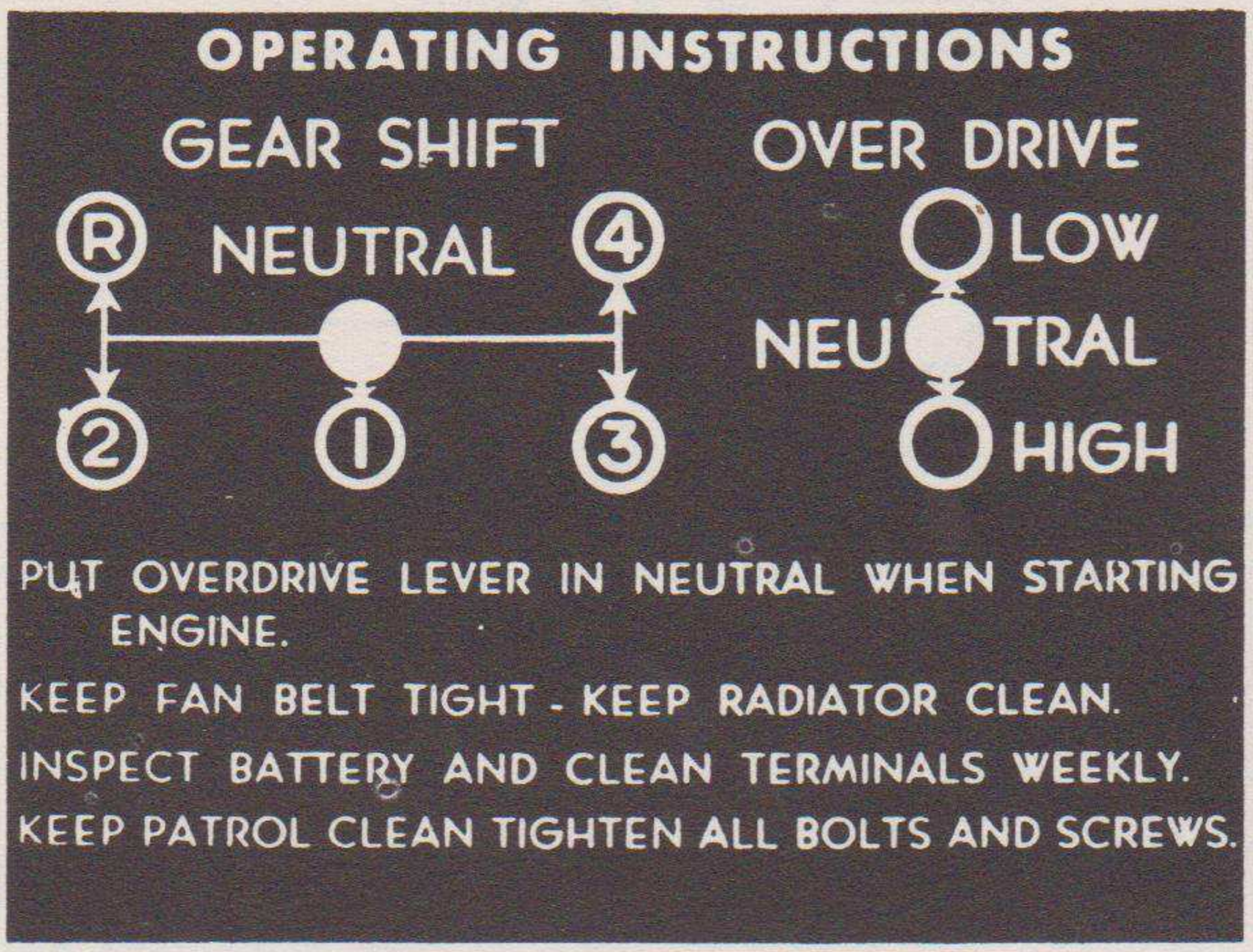

Emergency or Parking Brake—At left of operator.
Manifold—Complete control of hydraulic operations of machine. Refer to Fig. 3, Operator's Manual, Section 2, Page 2.
Choke—Located in heel plate below operator's seat.
Throttle Control—Located in heel plate below operator's seat.
Odometer—Records mileage of travel.
Conversion Lever—Pull back to start engine on gasoline. Push forward to convert to Diesel operation.

INDEX TO ENGINE

CLUTCH 6
COOLING SYSTEM 2
ENGINE—REPAIR 27
FUEL SYSTEM 45
IGNITION 9
INJECTION PUMP—BOSCH 46
INJECTION PUMP—I.H.C. 47
- CAMSHAFT UNIT 108
- DISTRIBUTOR UNIT 100
- GOVERNOR 113
- INJECTION PUMP REPLACEMENT 54
- OPERATION, INSTALLATION, TESTING AND TROUBLE SHOOTING 47
- PLUNGER UNIT 78
- PRIMARY AND SCAVENGING PUMP 60
- SCAVENGING VALVE UNIT 70

SERVICE CHARTS 133
TOOL EQUIPMENT 145
STARTING SYSTEM 136
MAGNETO 9

INDEX

1. GENERAL 2
2. OPERATION 2
3. WATER PUMP 2

2

COOLING SYSTEM

1. GENERAL

Capacity U. S. Gal. 18
Type ..... Flat Tube
Thermostat Open ..... 165°
Thermostat, Wide Open ..... 190°
Water Pump Drive ..... "V" Belt
Water Pump Fan Belt Tension Adjuster ..... Turn one flange of pump pulley
Water Pump Capacity G.P.M. 87
Fan Diameter ..... 20"
Fan Blades 4
Fan R.P.M. 2079

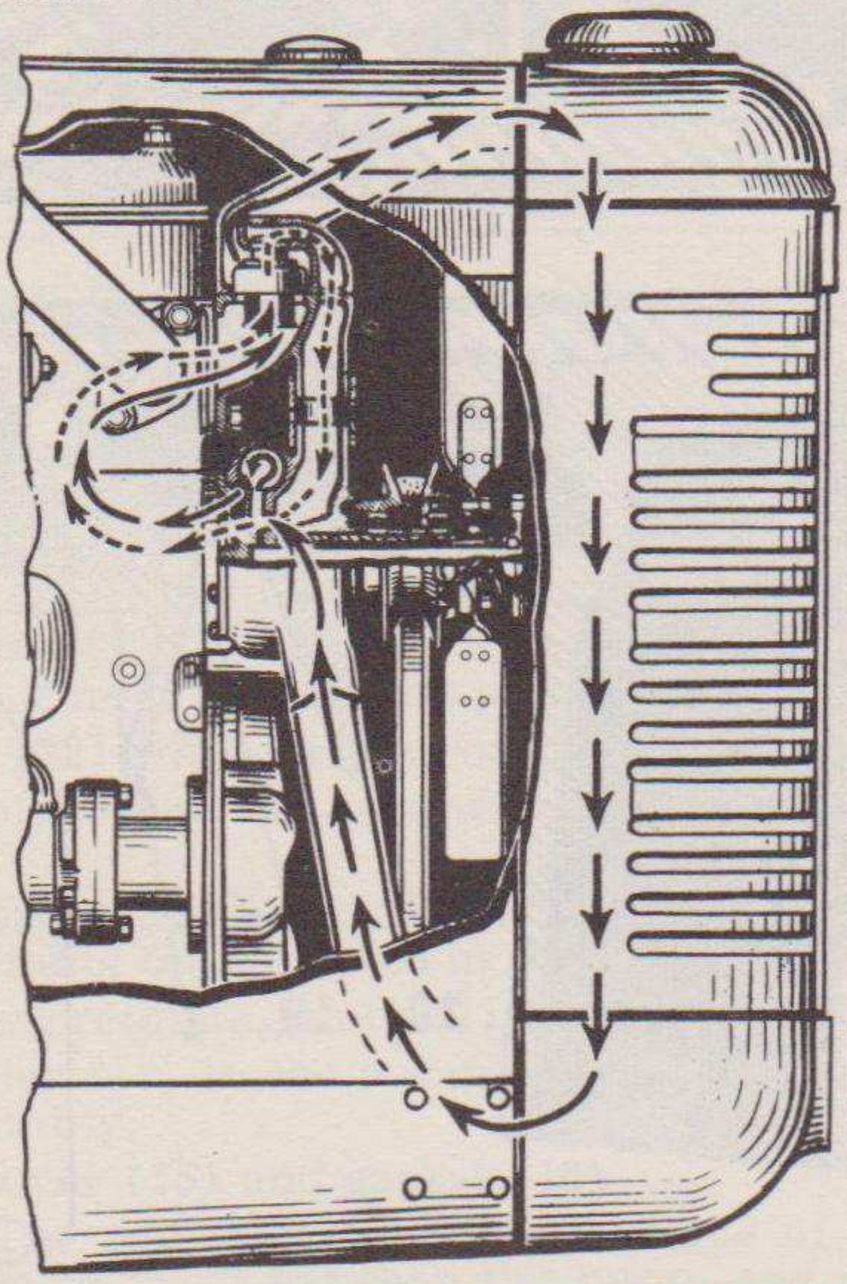

Fig. 1—Water circulating system. The water follows the path of the heavy arrows when the thermostat is open, and of the dotted arrows when the thermostat is closed.

2. OPERATION

A positive, centrifugal pump circulates water in the closed system between the engine block, cylinder head, and radiator. The temperature is controlled by thermostat, by-pass type, set in the casting attached to front of the cylinder head. The path of the water circulation when the engine is cold is from the radiator bottom, up through the pump, through the engine block, up to the cylinder head and out into the thermostat, through the thermostat, and by-passed back into the pump. Any water escaping into the radiator is made up from the supply at the bottom of the radiator.

This circulation during the warm-up period prevents formation of steam pockets. The thermostat starts to open at 165°. The temperature controls the opening of the thermostat which in turn controls the amount of water recirculated through the pump and also the amount of cooler water added from the radiator.

With the thermostat in the wide open position (190° F.), the by-pass is closed, no water is circulated through the pump and flow is from the cylinder head through the radiator and back to the pump.

3. WATER PUMP

a. Adjustment.—The fan assembly and drive pulley run on ball bearings mounted on a sleeve which is a press-fit in the water-pump body. The impeller is driven through a full-floating-type shaft.

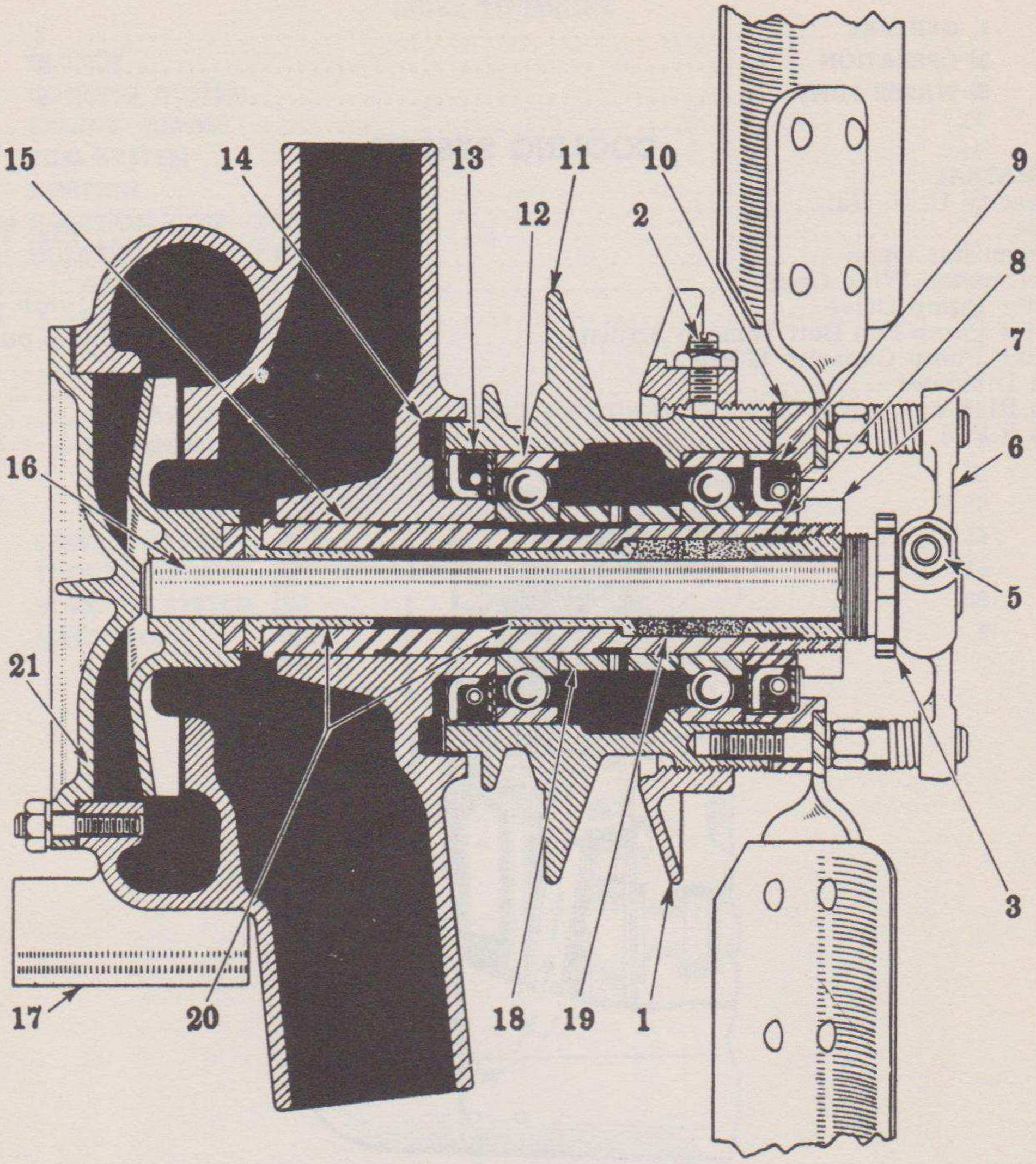

Fig. 2—Cross section of the water pump.
(1) Pulley Flange. (2) Set Screw. (3) Packing Gland. (5) Pin. (6) Driver. (7) Nut. (8) Spacer. (9) Oil Seal, Front. (10) Bearing Retainer. (11) Pulley Hub. (12) Bearing. (13) Oil Seal, Rear. (14) Felt Washer. (15) Sleeve. (16) Impeller with Shaft. (17) Pump Body. (18) Spacer. (19) Packing. (20) Bushings. (21) Cover.

Due to wear after considerable service, the pump may leak. When this occurs, tighten the packing nut (3), Fig. 2, just enough to stop the leaking. Use water pump wrench 11858-DA. After all the adjustment is taken up on the packing nut, it will be necessary to add more packing, or preferably, to remove the old packing and install new packing (19) Fig. 2. For service, packing is obtainable in split segments ¼" thick.

b. Removal.—The water pump can be removed after disconnecting the hose, removing the fan, fan belt, and bolts holding the pump to the crankcase. A gasket is used between the pump and crankcase at each point where a bolt is used to fasten the pump to the crankcase.

c. Service.—To replace the packing (19) Fig. 2, remove the driver pin (5) and driver (6). Unscrew and remove the packing nut (3). Remove the cover (21) on the back of the pump, and slide out the impeller with shaft for easy removal of the packing.

If the adjustable flange (1) has been broken it is only necessary to remove the fan, bearing retainer (10), and nut (7), and unscrew the flange.

Place the impeller and shaft back in the pump and install new packing. Place enough packing in the pump so that when the packing nut is installed sufficient threads on the nut on the outside of sleeve (15) will allow for take-up as the packing wears. Reassemble the pump by reversing the foregoing instructions.

d. Disassembly.—(1) Remove the fan and parts mentioned in preceding paragraphs.

(2) Remove the bearing retaining nut (12), Fig. 3, retainer (10), gasket (39), oil seal (38) and bearing, lock sleeve (11).

(3) Support the pulley hub (35) in a press and push on the forward end of sleeve (22), removing sleeve, body, and rear bearing from the pulley assembly.

(4) The front bearing can be removed from the hub (35). Be careful to support both races when removing the bearing.

e. Repair.—The running clearance of the impeller shaft in the bushings is .0015" to .0025". When wear is sufficient, the bushings (21) and (23) can be replaced with service parts reamed to size. The sleeve (22) is a press-fit in the pump body (28). The shaft (46) is .6215"-.6220" in diameter.

f. Reassembly.—(1) If the sleeve (22) has been removed, press it back into the body (28).

(2) Place the felt washer (32) in the groove in the pump body and lubricate with oil.

(3) Assemble the rear bearing (34) to the hub (35), with pulley flange (37), then put the oil seal (33) in the hub with the lip toward the bearing and the outside edge of the seal flush with the end of the hub.

(4) Place the spacer (36) in the hub (35) and assemble the front bearing in the hub. Grease the bearings with chassis lubricant.

(5) Line up the spacer (36) with the inner races of the bearings and place the assembly on the sleeve (22). Weld a couple of spacers together and use them to drive the hub assembly on the sleeve (22).

Be sure the rear bearing is against the pump body.

Support the sleeve (22) while driving on the hub.

(6) Assemble the oil seal to the retainer (10) with the lip toward the fan when assembled to the pump.

(7) Place the bearing lock sleeve on the sleeve (22), then the gasket (39), and bearing retainer (10), lining up the holes in the bearing retainer, gasket and hub.

(8) Screw the bearing retaining nut (37) on the sleeve (22) and tighten.

(9) Place the impeller (17) in the pump, add the packing (24), packing nut (13), fan, and the driver assembly.

(10) Replace the cover (15) and gasket (16).

g. Replacement.—The replacement is the reverse of the removal. Be sure all gaskets are new and are in place between the pump and crankcase. Adjust the fan belt tension as covered in the operator's section.

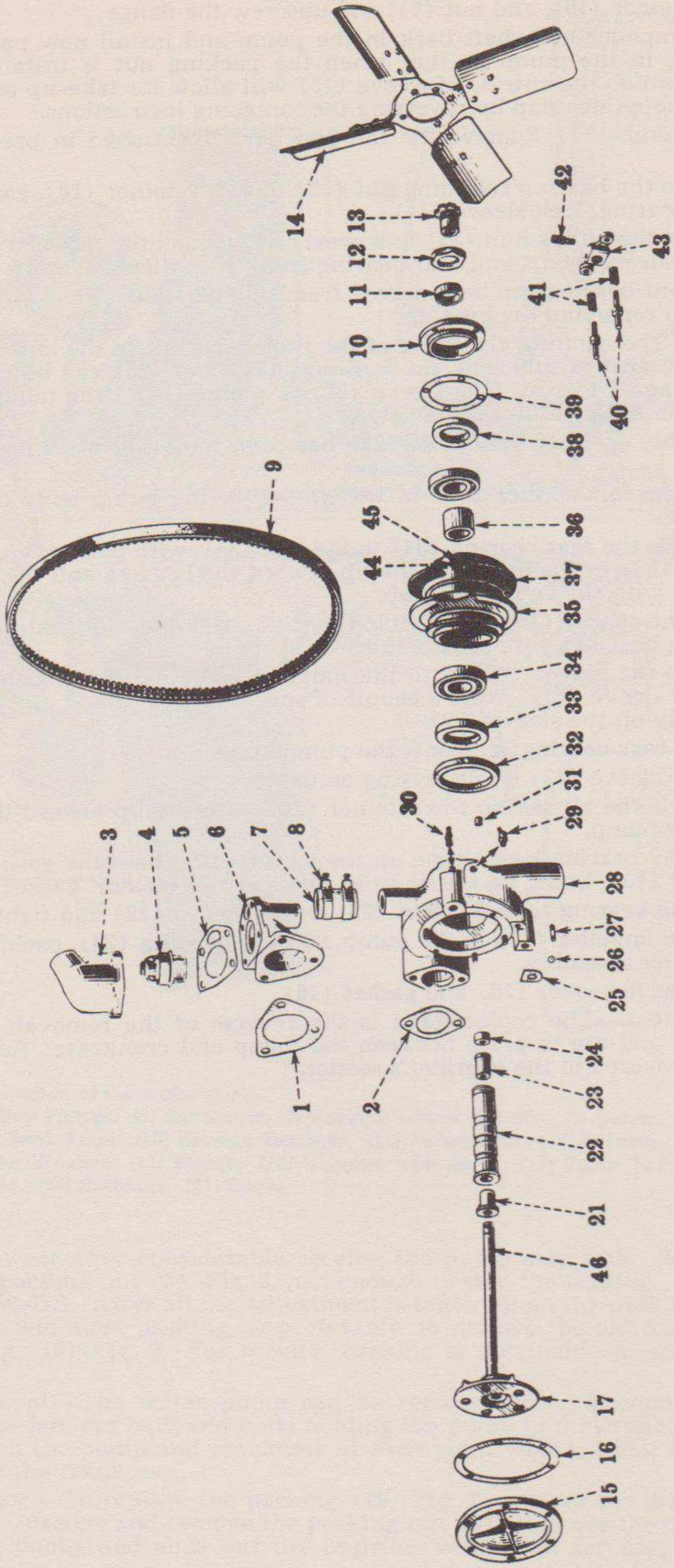

Fig. 3—Exploded view of the water pump.

INDEX

1. GENERAL 6
2. ADJUSTMENT 6
3. REMOVAL 6
4. DISASSEMBLY 6
5. SERVICE 6
6. REASSEMBLY 8
7. REPLACEMENT 8

ENGINE CLUTCH

1. GENERAL

Size .....14"
Manufacturer .....I.H.C.
Type.....Spring loaded, dry disc, single plate, foot pedal operated.

2. ADJUSTMENT

The clutch adjustment is covered in the operator's section of this book.

3. REMOVAL

a.—Remove the cover from the clutch housing of the transfer case.

b.—Disconnect the clutch coupling from the transfer case drive shaft and the clutch shaft. Lift out the coupling with the clutch coupling ring or brake drum.

c.—Remove the clutch release shaft from the transfer case and lift out the release fork with the clutch brake and spring.

d.—Assemble three capscrews, with washers, through holes in the back plate of the clutch and into tapped holes in the clutch pressure plate.

e.—Run up the capscrews evenly to compress the clutch springs as far as possible.

f.—Pry the clutch shaft off the flywheel and lift the entire assembly out as a unit.

g.—The clutch release collar with the bearing and sleeve come out of the assembly with the clutch shaft.

4. DISASSEMBLY

a.—Remove the cotter keys from the release lever eyebolt pins (4) Fig. 4, and pull out the pins.

b.—Remove the pins (1) and lift off the springs (2) and levers (3).

c.—Unscrew the three capscrews used to compress the clutch springs. The springs (8) and (9), and pressure plate (11) can be removed from the cover plate (5).

d.—Remove the release lever eyebolts (12) by loosening lock nut (13) and unscrewing from the release lever eyebolt sleeve (14).

e.—The pilot bearing in the flywheel can be removed with a SE-672 puller.

5. SERVICE

Check the pressure plate for scores, heat checks and warp. A scored or heat-checked plate can be detected by visual inspection. To check a plate for warp, lay a straight edge across it. The plate should be level and smooth or it will quickly wear out the facings. The pressure plate should travel freely, not binding in any way.

The flywheel should be smooth, that is, free from scores, heat check, and grooves. If a lathe is available the flywheel may be removed and smoothed with emery cloth. The drive pins in the cover plate engage the grooves in the pressure plate. Levers that show considerable wear where they contact the release bearing and also show wear at the pivot points should be replaced. Worn pins should be replaced with new ones.

The clutch is equipped with 12 pressure spring cups, each of which houses two pressure springs, one inside the other. The outer spring has a free length of $2\frac{1}{16}$" and tests 184 lbs. at $1\frac{19}{32}$". The inner spring has a free length of $2\frac{7}{16}$" and tests 76 lbs. at $1\frac{39}{64}$". When both are tested at the same time their combined strength should be 258 lbs. when compressed to $1\frac{39}{64}$".

Replace springs that have seen considerable service; they may have lost their tension and allow the clutch to slip under load, or cause uneven action. Springs that are discolored due to heat should always be replaced.

The friction plate has Chevron-type, one-piece linings attached to each side of the metal disc. Friction facings that show considerable wear or are rough and oil soaked should be replaced; that is, if the plate is in good condition. When installing new facings be sure all rivets are well countersunk. If the plate is defective, replace the entire assembly as a unit. Try the plate on the clutch shaft to see if it fits the clutch shaft spline. A snug fit is necessary.

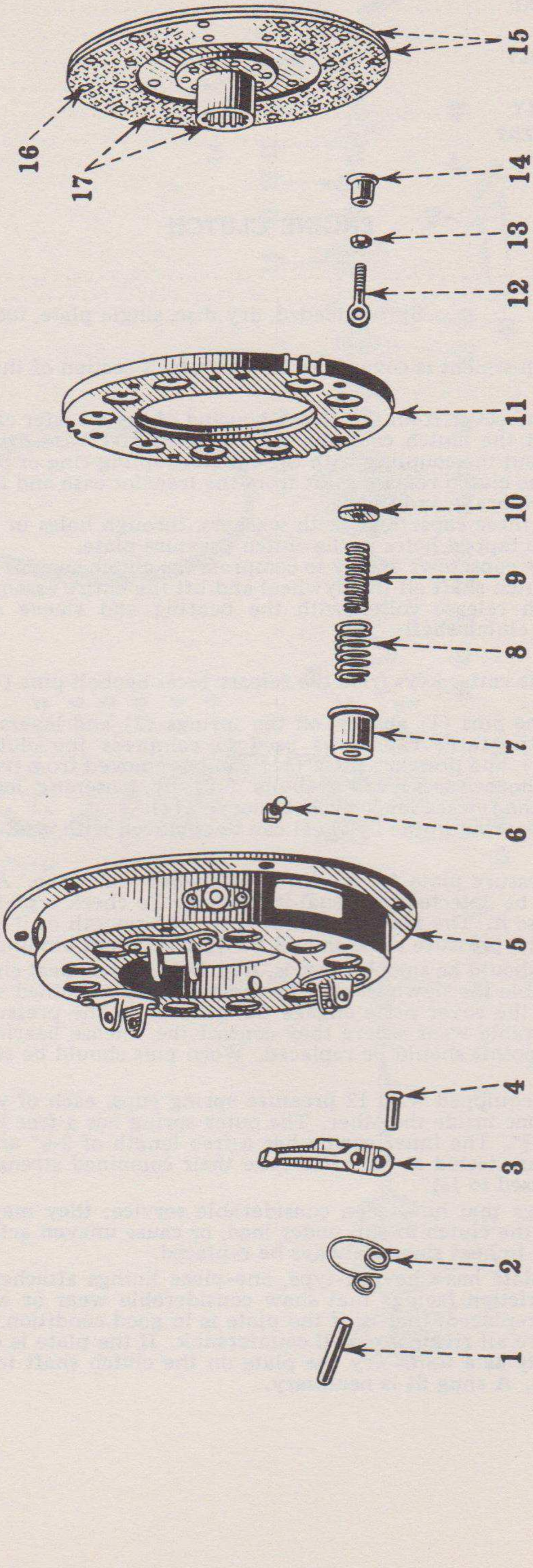

Fig. 4—Exploded view of the engine clutch.

6. REASSEMBLY

a.—Reassembly of the clutch is the reverse of disassembly.

b.—After assembling the capscrews to compress the clutch springs, the clutch can be properly adjusted with the aid of a surface plate (or very flat surface), a straight edge and a scale.

c.—With clutch-spring compressing capscrews in place, lay the clutch assembly, without the friction plate, face up on a bench and place a straight edge across the surface of the clutch cover where it attaches to the flywheel. The straight edge should be exactly $1\frac{1}{64}$" from the smooth surface of the pressure plate.

The distance is obtained by turning, in or out, the capscrews used to compress the clutch-springs. Take measurements with the straight edge in several places across the cover so that the pressure plate will be an equal distance from the cover all the way around.

d.—Turn the clutch over on a surface plate. The area around the mounting holes should not bulge; if so, they should be leveled off before making adjustment. Now measure the distance from the surface plate to the point where the release levers contact the release bearing. This point on each lever should be exactly $4\frac{1}{64}$" from the surface plate.

To obtain this dimension, the release lever eyebolt sleeve is turned in or out. Press down on the release lever and loosen the lock nut, turn the clutch over and turn in the sleeve with a screwdriver to increase the measured distance, and unscrew to decrease the measured distance. Tighten the lock nut after each adjustment. Press the levers down several times after each adjustment and recheck both the cover plate distance from the surface plate as well as the release lever distance. Action of the clutch must be smooth. Smooth action and accurate adjustments assure maximum efficiency of the clutch.

7. REPLACEMENT

a.—Replacement of the clutch is the reversal of the removal procedure.

b.—Adjust the clutch linkage to give the foot pedal a free travel that will produce $\frac{3}{16}$" clearance between the release bearing and the ends of the release levers of the clutch when the clutch is engaged and no pressure is being applied to the clutch pedal.

DO NOT
RIDE CLUTCH

990620 O—52——6

INDEX

1. GENERAL 9
2. OPERATION 9
3. REMOVAL 10
4. REPLACEMENT 10
5. BRACKET 10
6. IMPULSE COUPLING 11
7. DISTRIBUTOR CAP 14
8. DISTRIBUTOR ROTOR 16
9. DISTRIBUTOR GEARS 16
10. BREAKER POINTS 18
11. BREAKER ARM CAM 20
12. CONDENSER 20
13. PRIMARY WIRE 21
14. COIL AND COIL COVER 21
15. MOUNTING FLANGE 23
16. ROTOR 23
17. MAGNET 25
18. BEARING OUTER RACE AND OIL SEALS 26

IGNITION SYSTEM—MAGNETO

1. GENERAL

Magneto Type	I.H.C.—H-4
Rotation	Counter Clockwise
Magneto Grounding Switch	Automatic
Breaker Point Gap	.013"
Spark Advance	15°
Impulse Coupling Advance	T.D.C.
Magneto Gear, Helical	29 Teeth
Drive	Camshaft
Spark Plug Size	18 mm.-⅞" Hex.
Spark Plug Gap	.035" to .040"
Firing Order	1-3-4-2

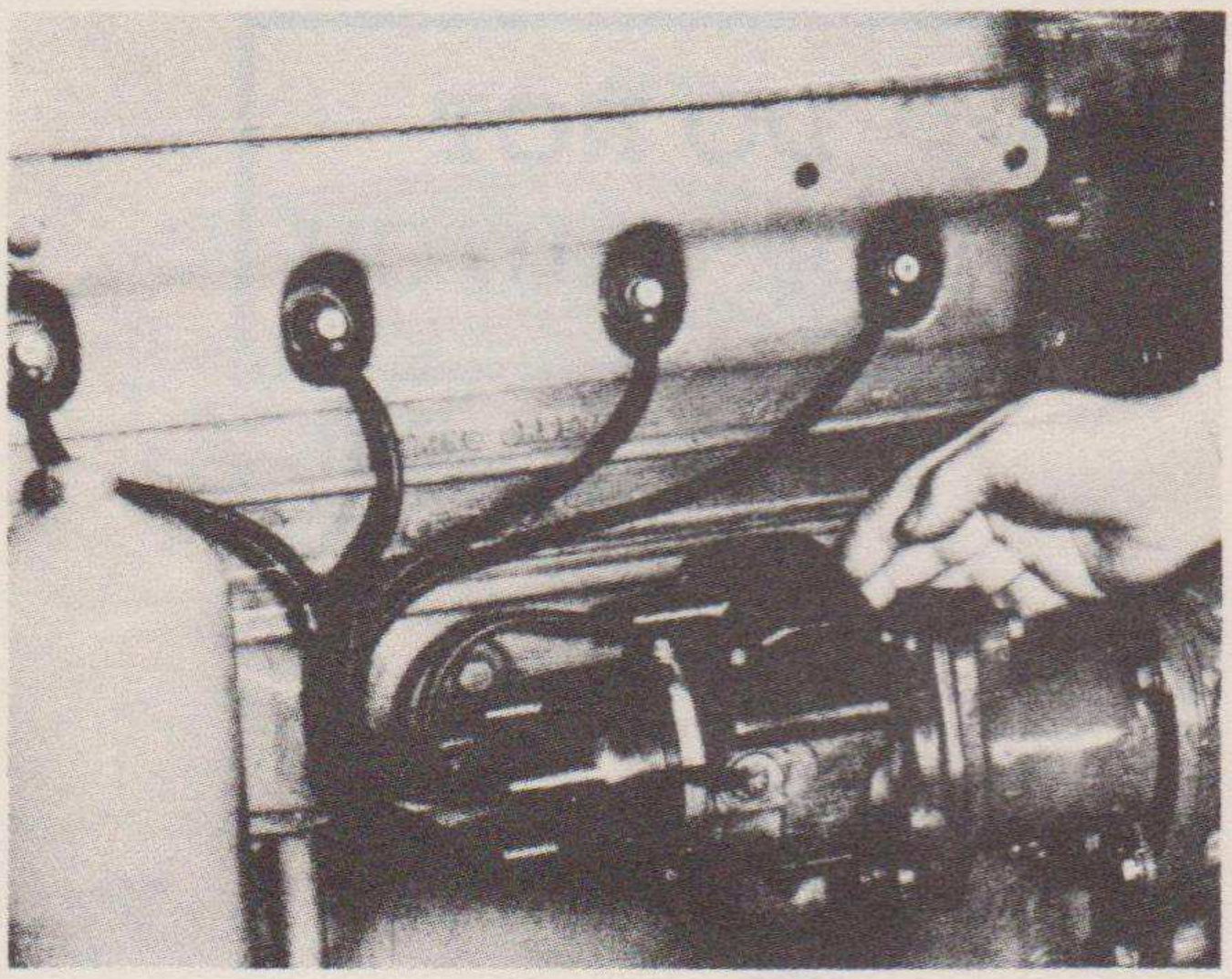

Fig. 5—Engine ignition wiring plan.

2. OPERATION

The magneto is grounded out during Diesel operation by an automatic grounding switch in the intake manifold that shorts the primary circuit. The magneto is driven through the impulse coupling which has a 150 R.P.M. missing speed. Throwout speed is 240 to 330 R.P.M.

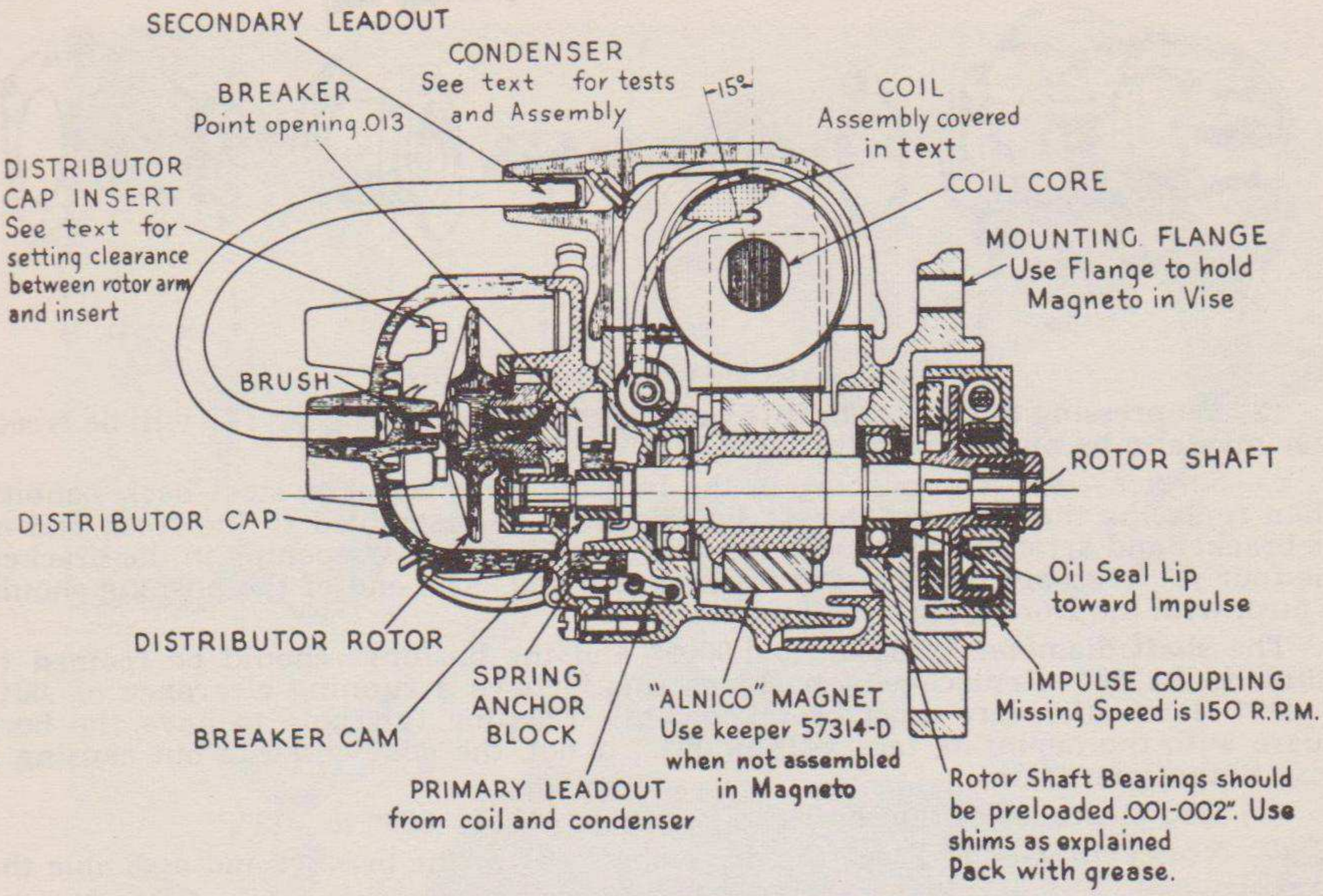

Fig. 6—Cross-section of International H-4 magneto.

The magneto, Fig. 6, features a completely enclosed breaker chamber, a starting impulse coupling, and an Alnico rotor magnet that should never require re-magnetizing. The exterior is extremely clean and all possible dirt-catching points have been eliminated. The flange is mounted to a drive bracket which is connected to the front plate of the engine. All shimming and lining up of various bolt holes when coupling the magneto to the engine is eliminated. Fine adjustment of timing is accomplished by rotating the magneto in slotted holes in flanges of bracket and magneto.

Designed for operation with 4-cylinder engines, the entire mechanism is fully enclosed and protected against entrance of dirt, dust and moisture. The condenser and coil are located underneath a plastic cover. The magnet is the rotating type, revolving between ends of pole pieces. Near the end of the magnet rotor shaft is the cam which operates the breaker mechanism; the breaker mechanism is sealed from the coil and distributor compartment. The flat on the extreme end of the magnet rotor shaft drives reduction gears which drive the distributor arm. The distributor cap fits only one way and the No. 1 leadout is plainly marked.

The serial number is stamped on the magneto frame and will identify the magneto and give all necessary information about it.

3. REMOVAL

a.—Take off the switch cable by removing fillister head screw and lockwasher attaching wire to magneto. Pull the spark plug wires from the distributor insert sockets.

b.—The magneto, with impulse coupling and gasket, are freed after removing the capscrews that secure the magneto to the bracket.

c.—The bracket with the magneto drive can be taken off by running out four (⅜ x 1½") capscrews that secure it to the front plate.

4. REPLACEMENT

a.—Secure the bracket assembly with a gasket to the front plate with four (⅜ x 1½") capscrews. The double punch mark on the magneto gear should match the double punch mark on the camshaft gear. To see the timing marks, the crankcase front cover must be removed when replacing this bracket.

b.—Replacement of the magneto is covered in the Operator's section.

c.—Replace the spark plug wires. Replace the switch cable by using screw with lock washer.

5. BRACKET

a.—*Removal.*—This can be accomplished as described under Item 3 just preceding.

b.—*Disassembly.*—(1) Bend back the nut lock (10) and run off nut (11) Fig. 7.

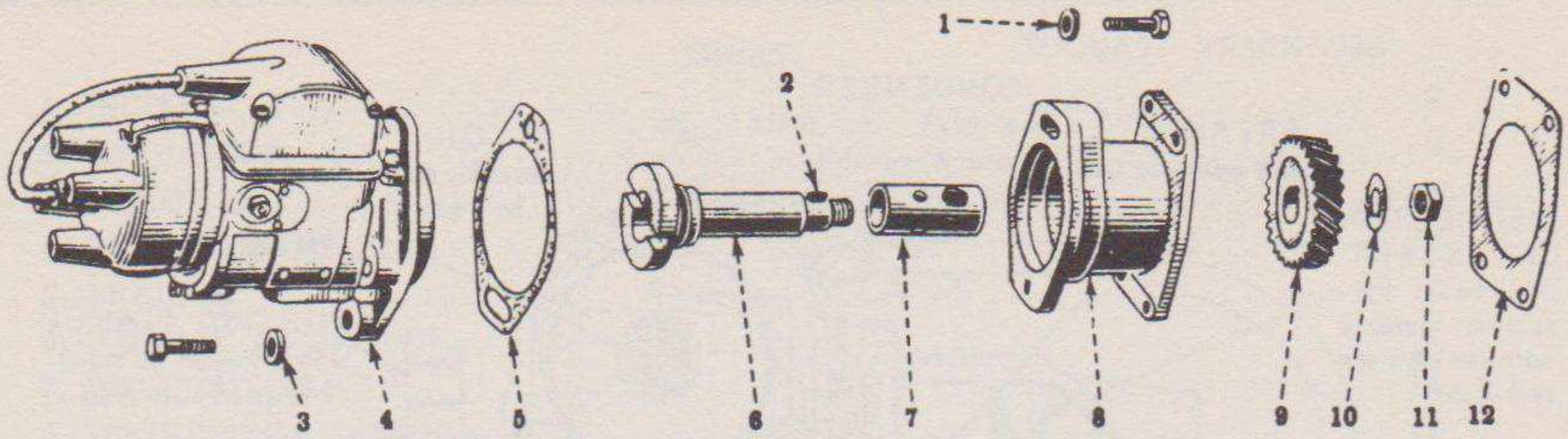

Fig. 7—Exploded view of magneto drive.

(2) By pressing the drive shaft (6) out of the bracket, the gear (9) will be freed. Gear may also be pulled from the shaft.

c.—Service.—(1) The bushing in the bracket is replaceable, steel-back babbitt. When replacing the bushing, the $\frac{9}{16}$" holes should be assembled to the front end of the bracket and arranged vertically to coincide with a similar opening in the bracket. The four $\frac{3}{16}$" holes are then toward the magneto end. The end of the bushing should be flush with the front face of the bracket.

The shaft diameter is .9995" to 1.0005" and the bushings should be reamed to 1.0015" to 1.0030". Replacement bushings should have a running clearance of .001" to .003". Particular care must be taken while reaming this hole to have the bore square with the mounting face within .002"; if not, the gear will run out causing a noisy timing gear train.

(2) End clearance of the shaft and gear assembly is .003" to .013".

d.—Reassembly.—(1) Place the drive shaft (6) in the bracket and assemble the key (2).

(2) Press the gear on the shaft and secure it with nut (11) and nut lock (10). The flat side of the gear is assembled against the bracket for end thrust contact. Check face of gear to make sure it runs true with front surface of bracket.

e.—Replacement.—This is completed as outlined under "General" C-1.

6. IMPULSE COUPLING

a.—General.—(1) The first purpose of the impulse coupling is to retard the spark at low engine speeds to approximately top dead center of the piston stroke thereby preventing the engine from back firing. Secondly, as the magneto member (7) Fig. 10, is retarded by the pawls (1), Fig. 11 (at low speeds these pawls are stopped by pawl stop pin (7), Fig. 28, the lug (3) on the magneto member (7) compresses the impulse spring (1), Fig. 10. The lugs on driver (6), which continues to rotate at constant speed, trips the pawls (forces them away from the pawl pin) and the magneto member (keyed to the magneto rotor) is forced to rotate by the compressed spring at a greater speed than that of the drive member (6). The increased speed of the rotor provides a much hotter spark to the engine than would be provided by a direct drive to the magneto.

(2) As the speed of the engine increases, the weighted ends (2) of the pawls (1), Fig. 11, are thrown out by centrifugal force and their short ends no longer engage the pawl pin in the mounting flange. The spark is no longer retarded. The missing speed, approximately 150 R.P.M., is the speed at which the impulse coupling no longer continually retards the spark. At this speed it retards the spark intermittently only. Over the range of the throw-out speed, 240 to 330 R.P.M., the impulse coupling should cease to function completely, giving the effect of a direct drive.

The engine should never be allowed to idle slowly enough to permit the impulse coupling to operate. Its operation is denoted by a sharp click.

b.—Removal.—(1) To remove the impulse coupling insert a nail or pin through a hole (1), Fig. 8, in coupling drive member (2), locking the two elements together.

(2) Apply a socket wrench to the nut and a wrench to one of the driving lugs (5) to prevent shearing the nail or pin while removing nut.

(3) The impulse coupling can now be removed with a tool (4), Fig. 9, which screws into a thread provided inside magneto member (6). As the tool is turned in, the inside end contacts the rotor shaft and forces the member off the shaft.

c.—Disassembly and Reassembly.—(1) The impulse coupling drive member (6) with impulse coupling spring (1) can readily be removed as shown in Fig. 10. The impulse coupling spring (1) should seldom need to be removed from the driving member, but should it be necessary to remove the spring it can readily be pried out of place.

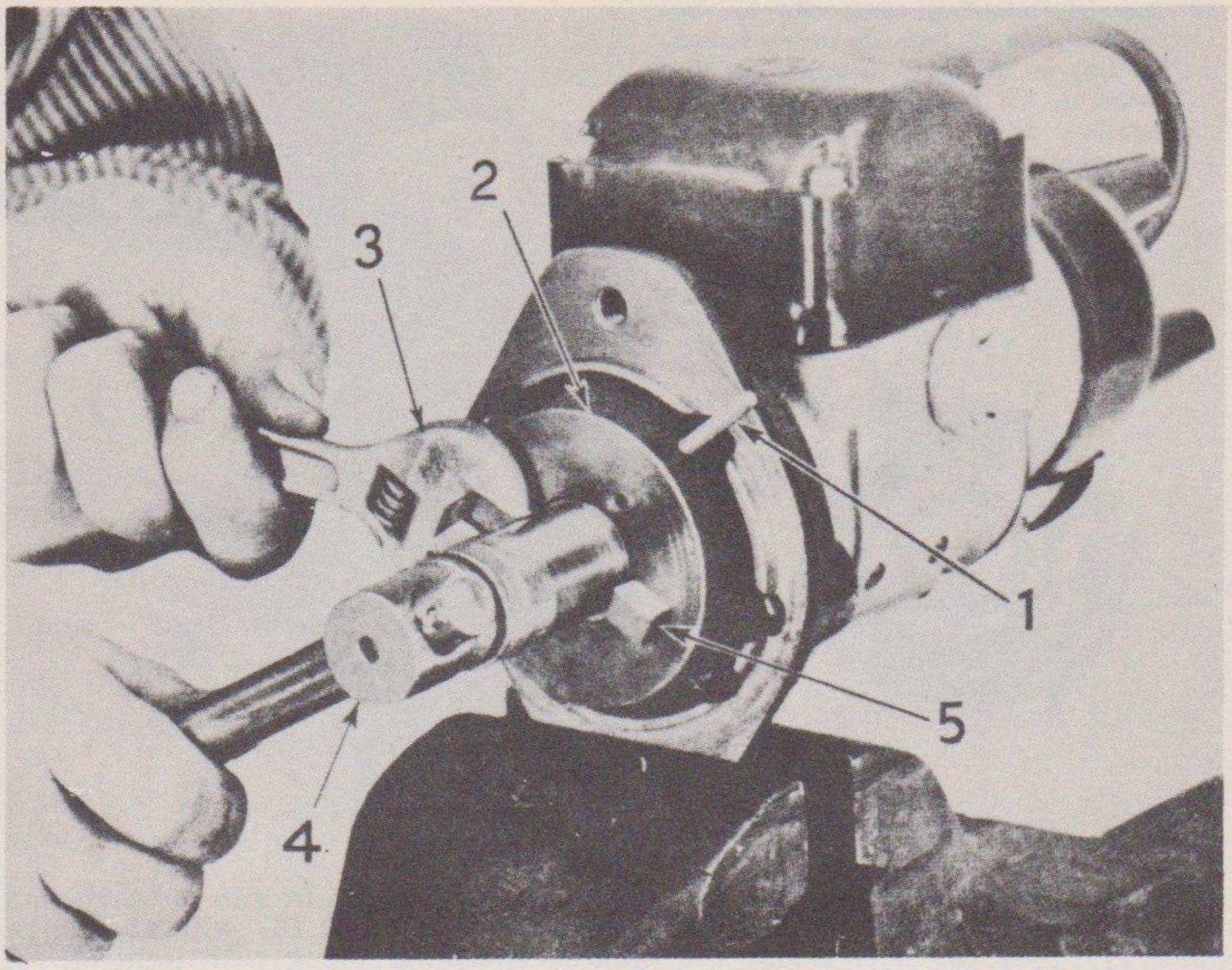

Fig. 8—Correct method of removing impulse coupling nut. (1) Pin connecting hole in impulse driving member and lug of magneto member. (2) Impulse driving member. (3) Adjustable wrench. (4) Socket wrench. (5) Lug on impulse driving member.

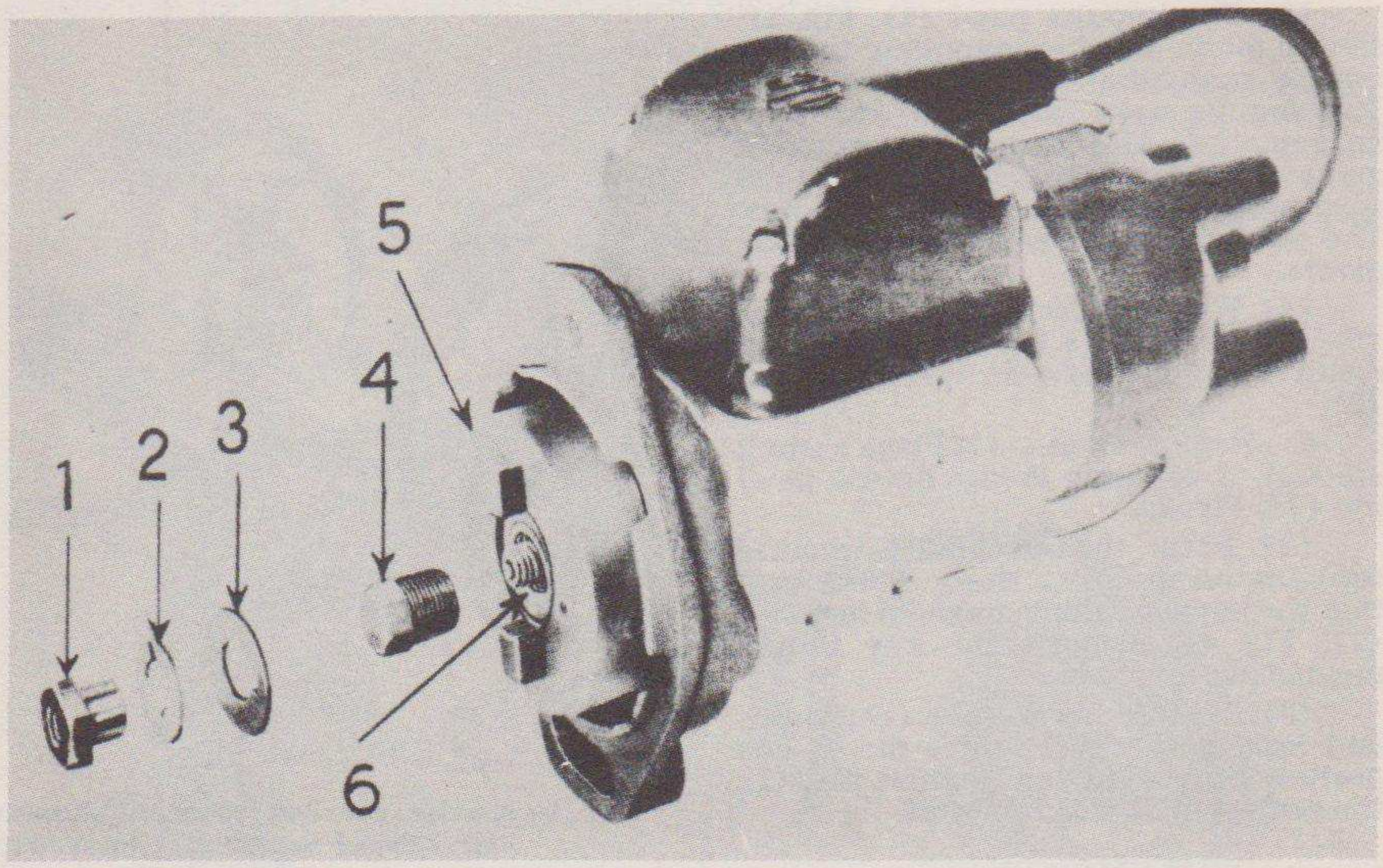

Fig. 9—Removing impulse coupling. (1) Impulse nut. (2) Lock washer. (3) Washer. (4) Service tool SE-912. (5) Impulse drive member. (6) Thread on inside of magneto member.

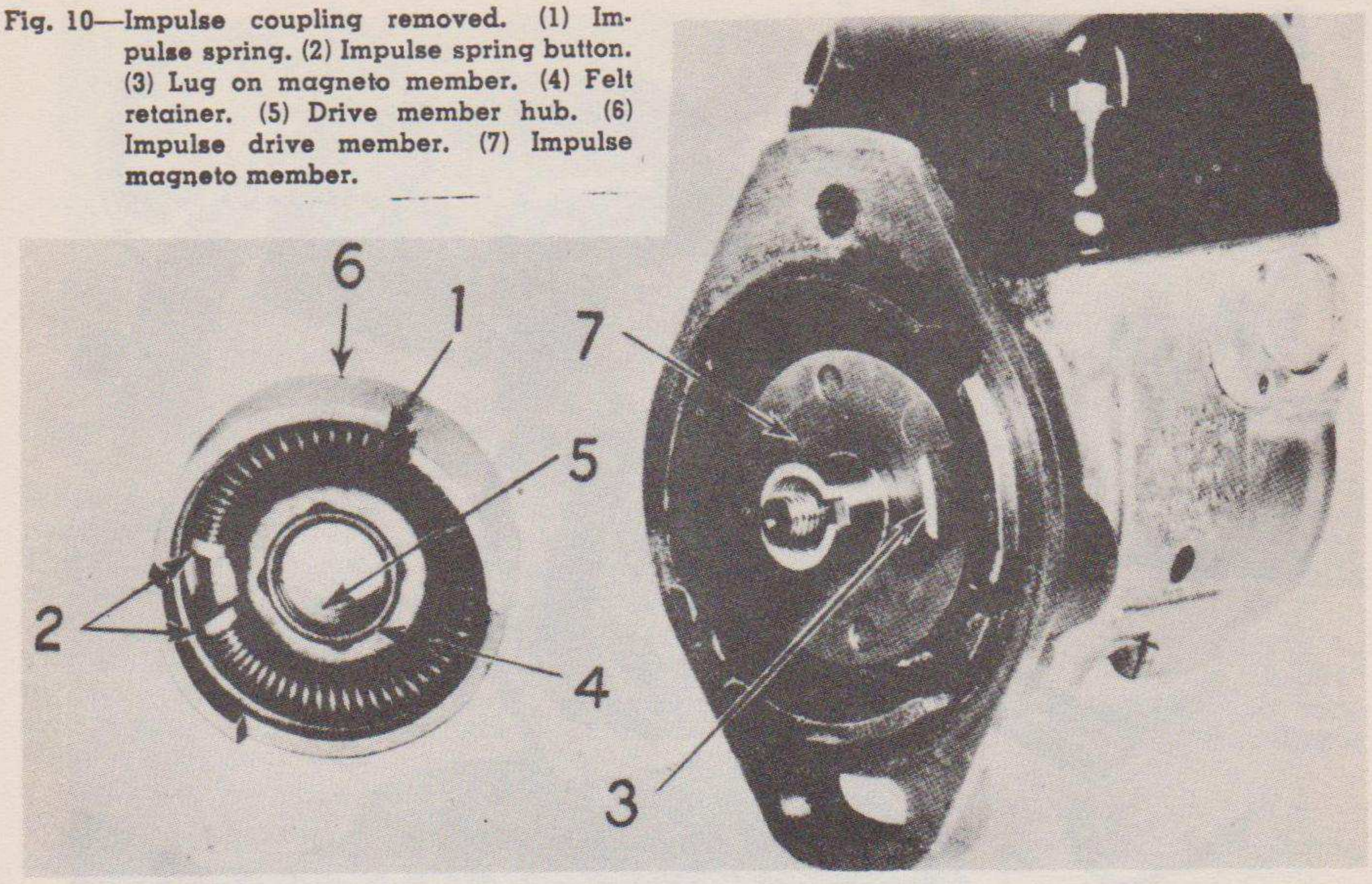

Fig. 10—Impulse coupling removed. (1) Impulse spring. (2) Impulse spring button. (3) Lug on magneto member. (4) Felt retainer. (5) Drive member hub. (6) Impulse drive member. (7) Impulse magneto member.

(2) To replace this spring, just compress it sufficiently to fit into the drive member as shown. Before assembling the impulse drive member (6) with the magneto member (7), soak the wick inside the impulse coupling spring with light oil. Also coat inside hub (5) of the driving member with magneto grease. The lug (3) should be a tight fit between the hardened buttons (2) on each end of the impulse coupling spring. If the buttons (2) should become worn or grooved, renew them.

(3) The impulse pawl (1), Fig. 11, can be taken off after removing the retaining snap ring (4) and washer (3). The impulse pawl springs (5) can then be replaced. Use a small amount of grease on the pawl pivot and replace the springs, pawls, washers and snap rings. The pawls should move freely on their pivots.

(4) When replacing drive member (6), Fig. 10, be sure lug (3) of magneto member (7) fits between spring buttons (2).

d.—Replacement.—(1) Place a small amount of magneto grease on the pawl pin (7), Fig. 28.

(2) Press the assembled impulse coupling on the rotor shaft. Make sure that the keyway in the magneto member (7), Fig. 10, engages the key in the magneto rotor shaft.

(3) Replace the washer (3), Fig. 9, and lock washer (2) which fits in one position only. Tighten impulse nut (1) the same way it was removed.

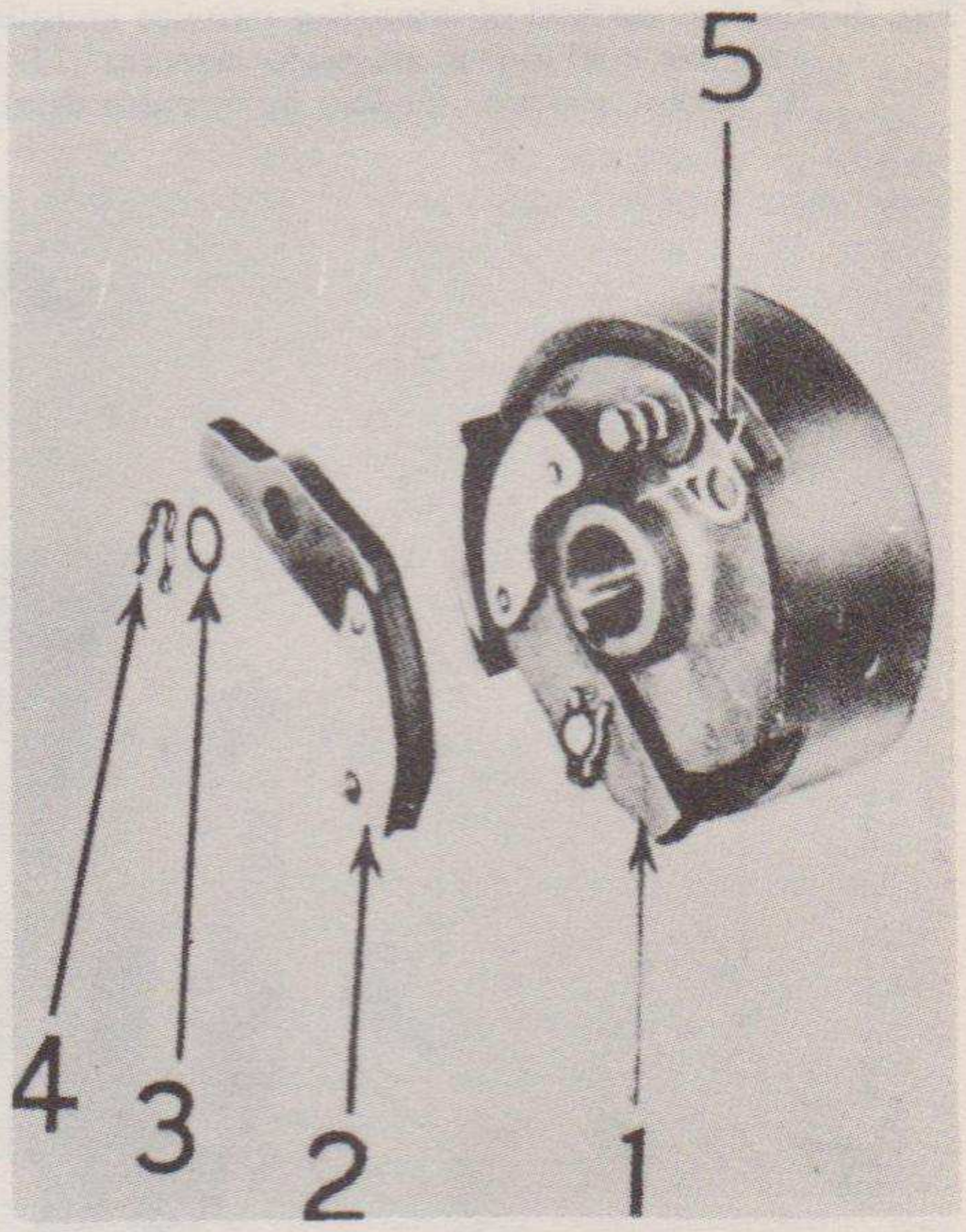

Fig. 11—Impulse coupling complete showing rear side of magneto member with impulse pawl removed. (1) Impulse pawl. (2) Counterweight. (3) Washer. (4) Retaining snap ring. (5) Impulse pawl spring.

Fig. 12—H-4 magneto complete

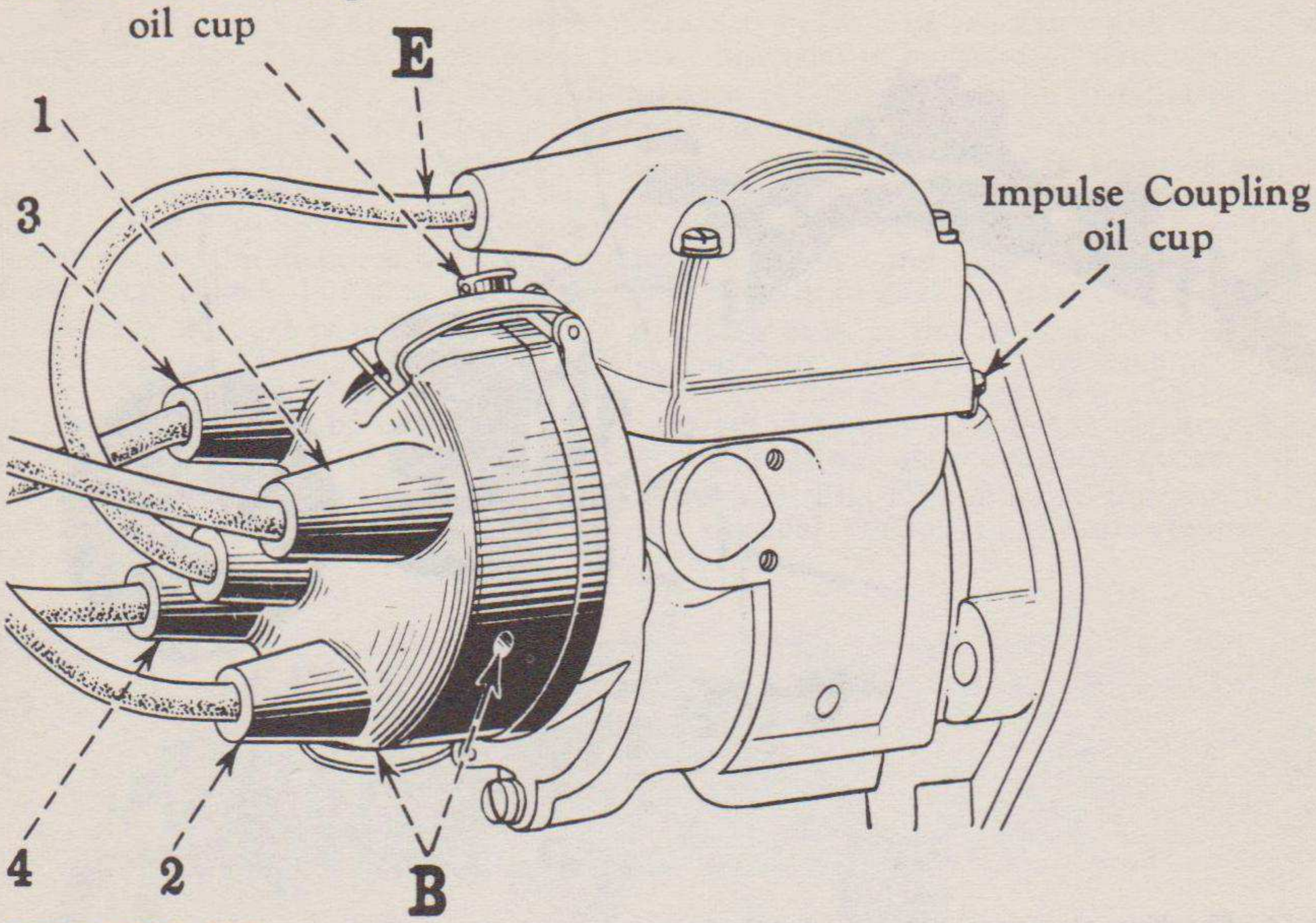

7. DISTRIBUTOR CAP

a.—Removal.—(1) The lead wire from the secondary coil plugs into the central insert socket and the cables to the spark plugs fit in the outside sockets, starting with No. 1, Fig. 5, marked on the face of the cap. Pull out the cables and secondary wire from the distributor cap.

(2) To remove the distributor cap push the distributor cap springs out of the cap recesses and pull off the cap which fits only one way.

Fig. 13—Method of removing distributor rotor from its spindle. (1) Distributor rotor. (2) Monel distributor arm. (3) Distributor cap inserts. (4) Secondary carbon brush.

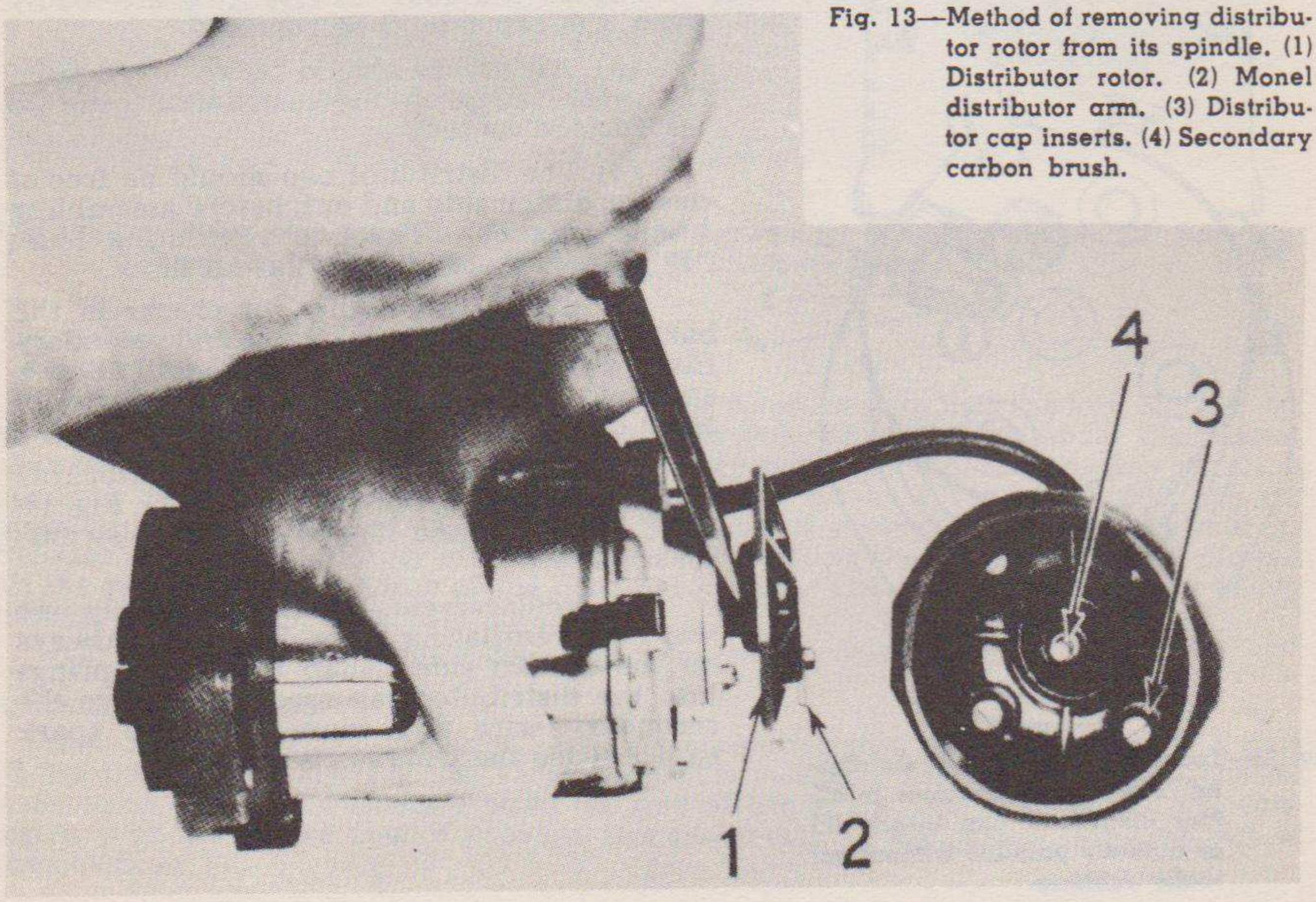

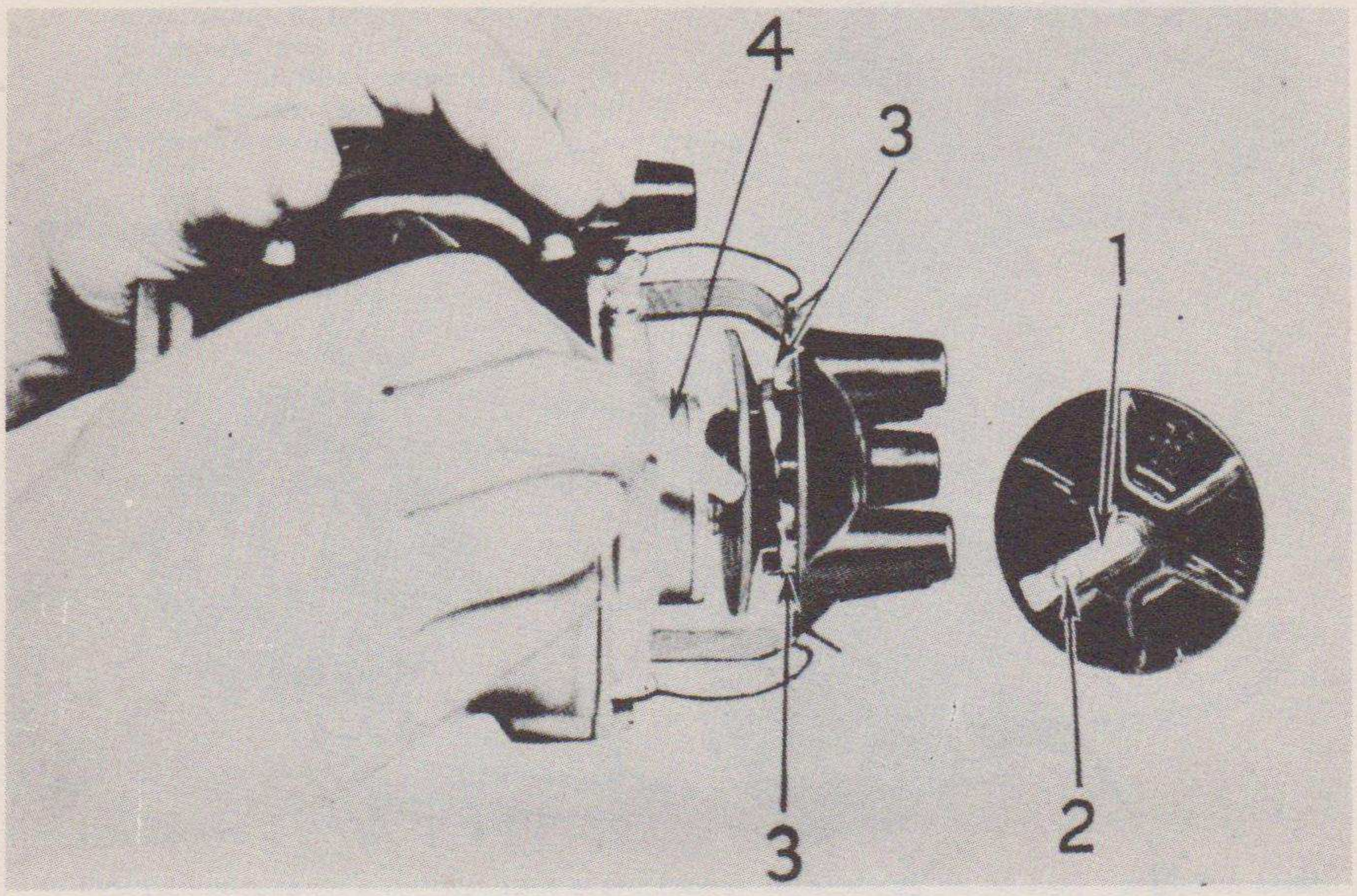

Fig. 14—Checking clearance between distributor rotor metal arm and the insert in distributor cap using a cutaway cap. (1) Monel metal arm. (2) Arm nut. (3) Distributor cap insert. (4) Feeler gauge.

b.—Repair.—(1) The carbon brush (4), Fig. 13, in the central socket contacts the monel metal strip (2) of the distributor rotor (1). The brush, which is attached to a spring, should move freely in the socket. The brush (4) and spring can be pulled out of the socket if replacement is necessary.

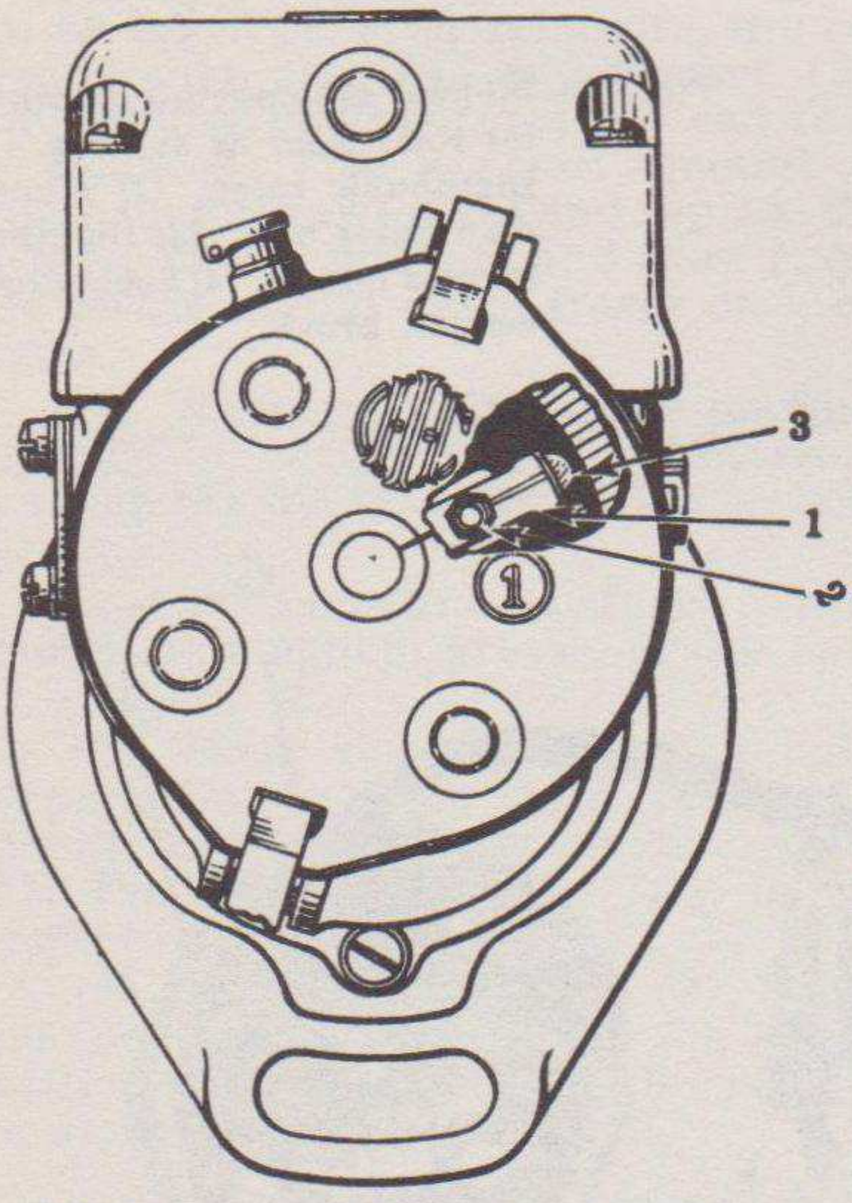

Fig. 15—Loosen nut (2) to adjust distributor rotor arm (1) as close to all four distributor cap inserts (3) as actually possible without actually rubbing.

(2) If the four inserts (3) are badly worn, the cap should be replaced.

(3) All grease should be removed from the monel strip on the distributor rotor to assure good contact.

(4) The distributor cap should be free of dust or dirt, inside and out, before assembling to the magneto. The two ventilating holes "B", Fig. 5, should be open at all times.

(5) Check thoroughly for cracks in the bakelite around the spark cable and secondary insert sockets. Very small cracks will allow a spark to go through the cap and partially short out the engine.

(6) For adjustment of the distributor rotor arm with respect to the inserts (3), Fig. 14, refer to Figs. 14 and 15, and copy for distributor rotor.

C.—Replacement.—The cap fits only one way; the ventilating holes, Fig. 5, are always on the bottom side. Snap the body springs into the distributor cap recesses, replace the secondary wire and connect up the spark cables. (See the Operator's section).

8. DISTRIBUTOR ROTOR

a.—Removal.—(1) Remove the distributor cap.

(2) Apply the end of a screw driver against the hub of the rotor and pry off as shown in Fig. 13. The bakelite rotor is fragile and should be handled with care.

b.—Adjustment.—(1) The monel metal arm (1), Fig. 14, on the distributor rotor is adjustable and renewable. It is removed by running out the arm nut (2).

(2) The arm (1) should operate as close to the insert in the distributor cap as possible without rubbing. (Refer to Figs. 14 and 15). To correctly adjust the distributor arm, a cap may be taken from stock and cut away as shown in Fig. 14. Then, using a feeler gauge, the distance between the distributor arm and insert in the distributor cap can be checked. The arm can be adjusted slightly to gain the desired clearance.

Another method is to apply a little Prussian blue to the end of the distributor arm, then place the distributor cap on the magneto. Next, turn the magneto rotor over several times by hand. If the limits between the distributor arm and caps are close, a small amount of bluing will be transferred to the distributor cap insert. A very slight coating should show on the insert without any actual rubbing occurring.

(3) To adjust the rotor arm, loosen the nut (2), Fig. 15, and move the arm to the point where the outside end just clears the vertical portion of the distributor cap inserts (3).

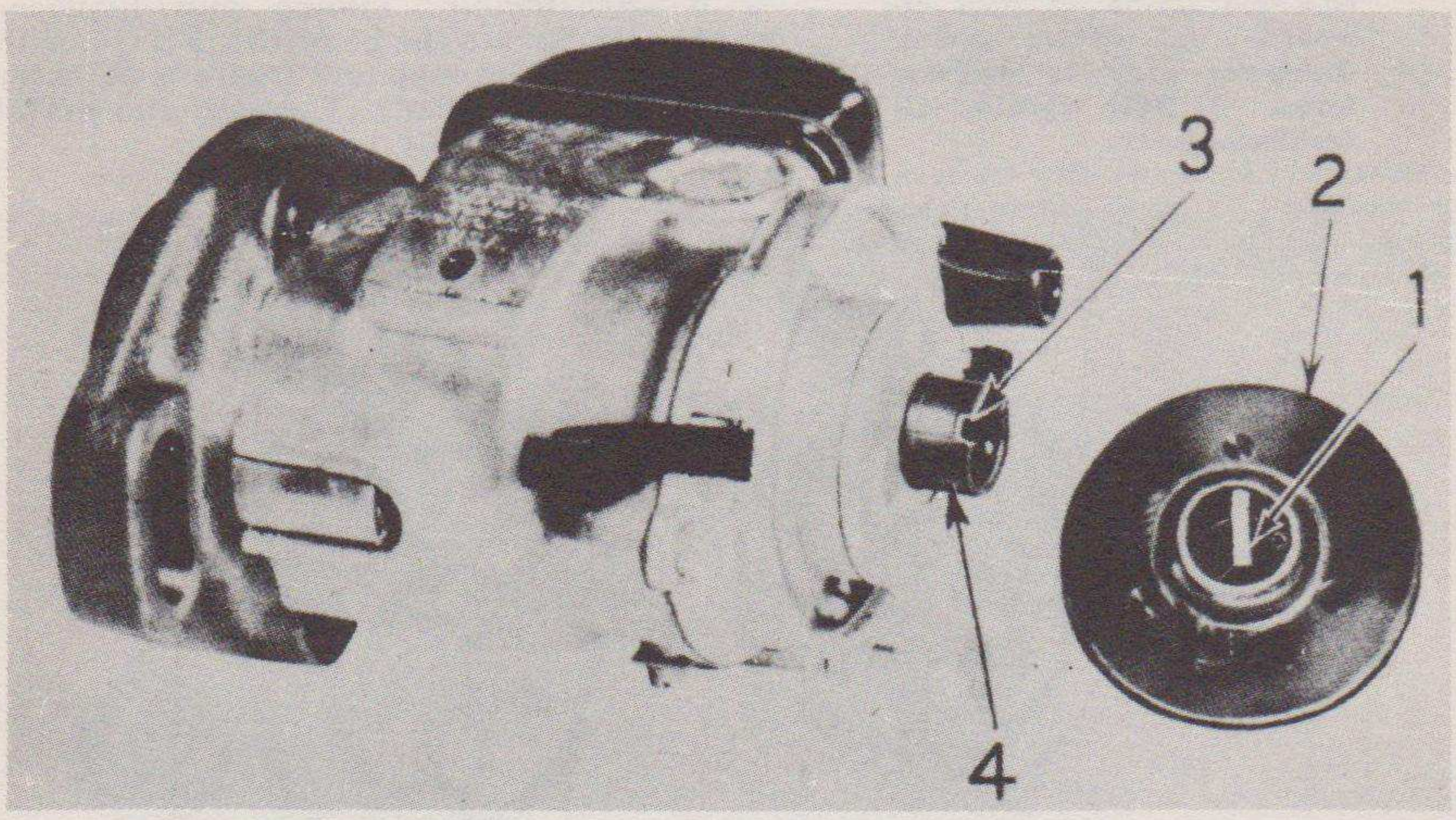

Fig. 16—Distributor rotor removed showing key and keyway for locking in position. (1) Rotor key. (2) Rotor. (3) Distributor spindle keyway. (4) Distributor spindle.

c.—Replacement.—(1) When replacing the rotor, be sure that the key (1) Fig. 16, on the inside of the rotor (2) coincides with the slot (3) on the end of the distributor gear spindle (4). To assist in lining up the key with the slot, use the rib which is opposite the monel metal arm on the opposite side of the rotor as a guide, the rib being in line with the key. Be sure that the rotor is pressed on as far as it will go because there is a possibility of entrapped air preventing the rotor from being pushed all the way down on the hub of the distributor gear. The rotor should have a heavy hand press fit on the distributor spindle.

(2) Replace the distributor cap, spark plug cables, and secondary cables.

9. DISTRIBUTOR GEARS

a.—General.—The distributor gears are contained in a chamber which is a part of the distributor body, Fig. 18. This chamber is partially filled with magneto grease and sealed with felt washers around the hub of the gears. These seals and the consistency of the grease should prevent any possibility of the grease working out of the chamber.

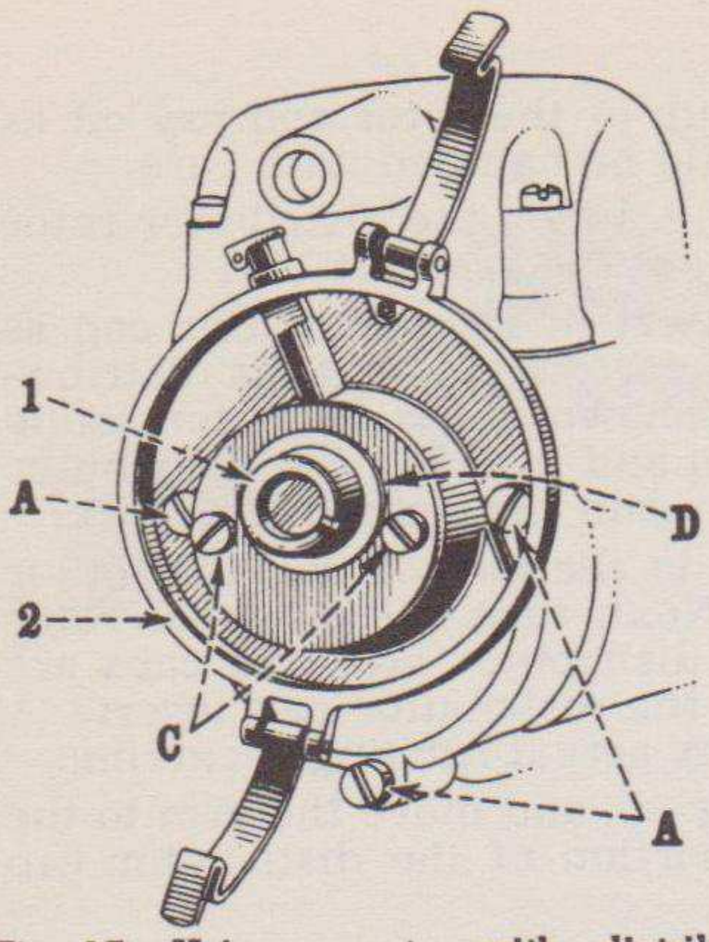

Fig. 17—H-4 magneto with distributor cap and distributor rotor removed. "A", screws holding distributor body to magneto frame. (1) Rotor spindle. (2) Distributor body.

b.—Removal.—Run out three capscrews "A", Fig. 17, from the body and remove it with the gasket.

c.—Disassembly and Repair.—(1) By removing two screws (1), Fig. 18, the cover (2) and the gasket come off.

(2) The distributor pinion (5) and the distributor spindle (9) can be lifted out.

(3) The felt oil seal (3) in the distributor body, Fig. 19, may be replaced by driving out the old retainer. Before replacing the retainer and felt, clean out the hole with a metal cutting tool such as a bearing scraping tool. Replace the felt and retainer and lock the new retainer in place by very lightly crimping over the edge of the body with a center punch. The thrust surface of the retainer should be flat. Do not soak the new seal in oil. After assembly, coat it lightly with magneto grease.

d.—Reassembly, Timing and Replacement.—(1) Secure the body (3), Fig. 18, with the gasket to the magneto frame with three screws and lockwashers. The body and gasket fit in one position only.

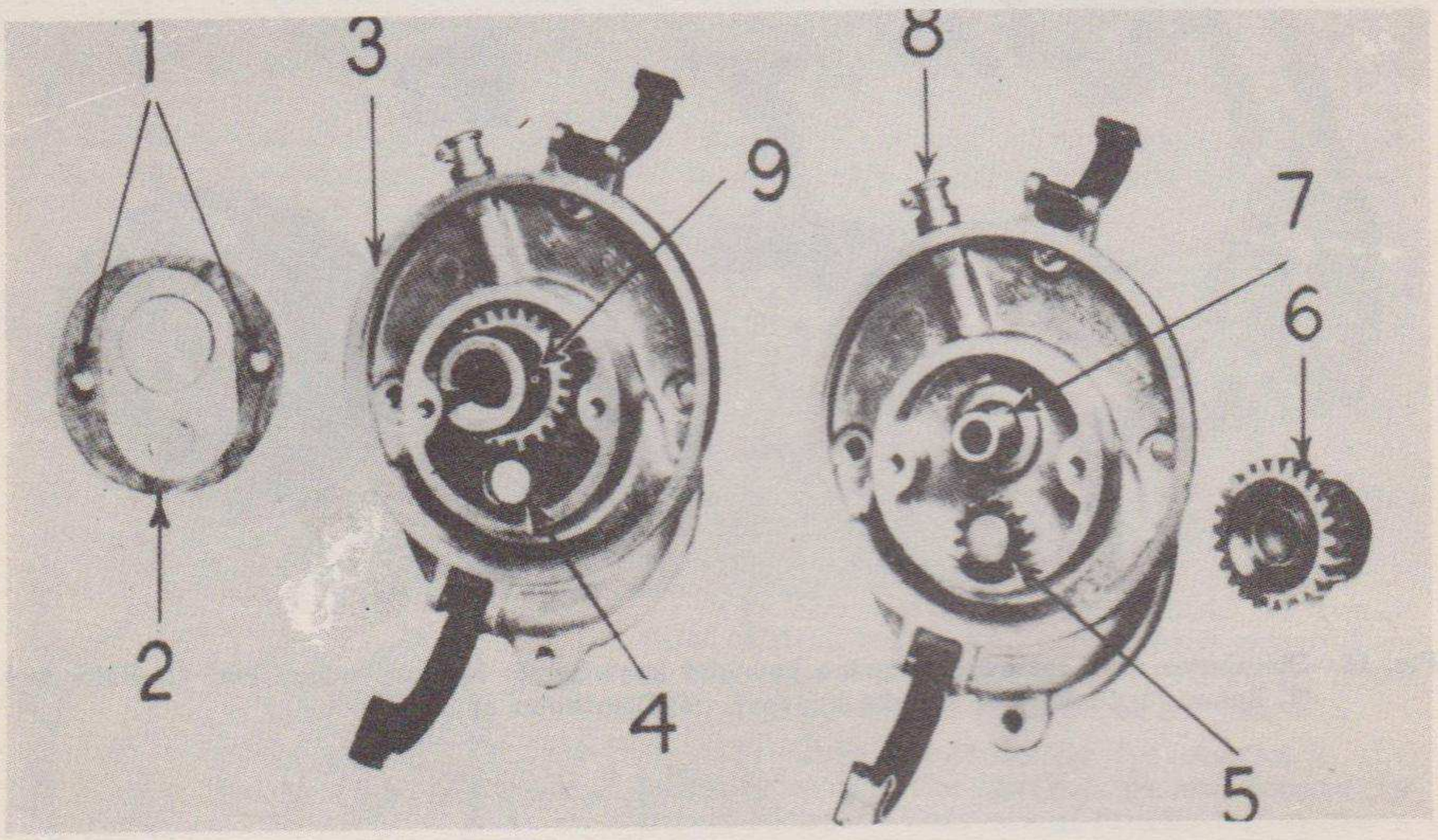

Fig. 18—Distributor gear assembly. (1) Capscrews (2) in cover. (2) Gear chamber cover. (3) Gear body. (4) Bore for distributor pinion shaft. (5) Distributor pinion. (6) Distributor gear. (7) Distributor shaft. (8) Distributor bearing oil cup. (9) Distributor spindle.

(2) Replace the distributor gear spindle (9) on the shaft (7). It should turn freely on the shaft.

(3) Replace the pinion (5), Fig. 18, and check the backlash with the gear (6). A slight movement should be felt (approx. .002" to .004"). Turn the rotor shaft to make the flat spot on the pinion hub (5), Fig. 19, line up with the flat spot on the rotor shaft (6).

(4) Take off the distributor spindle (9), Fig. 18, and fill the bore with magneto grease. Press the distributor gear spindle onto the shaft (7). As the teeth come in contact, time the distributor spindle by meshing the rotor pinion (5) and the distributor gear so that the marked tooth on the pinion (5) is in line with the "L" marking (a counter-clockwise magneto) on the gear as shown in Fig. 20. This is a very important operation.

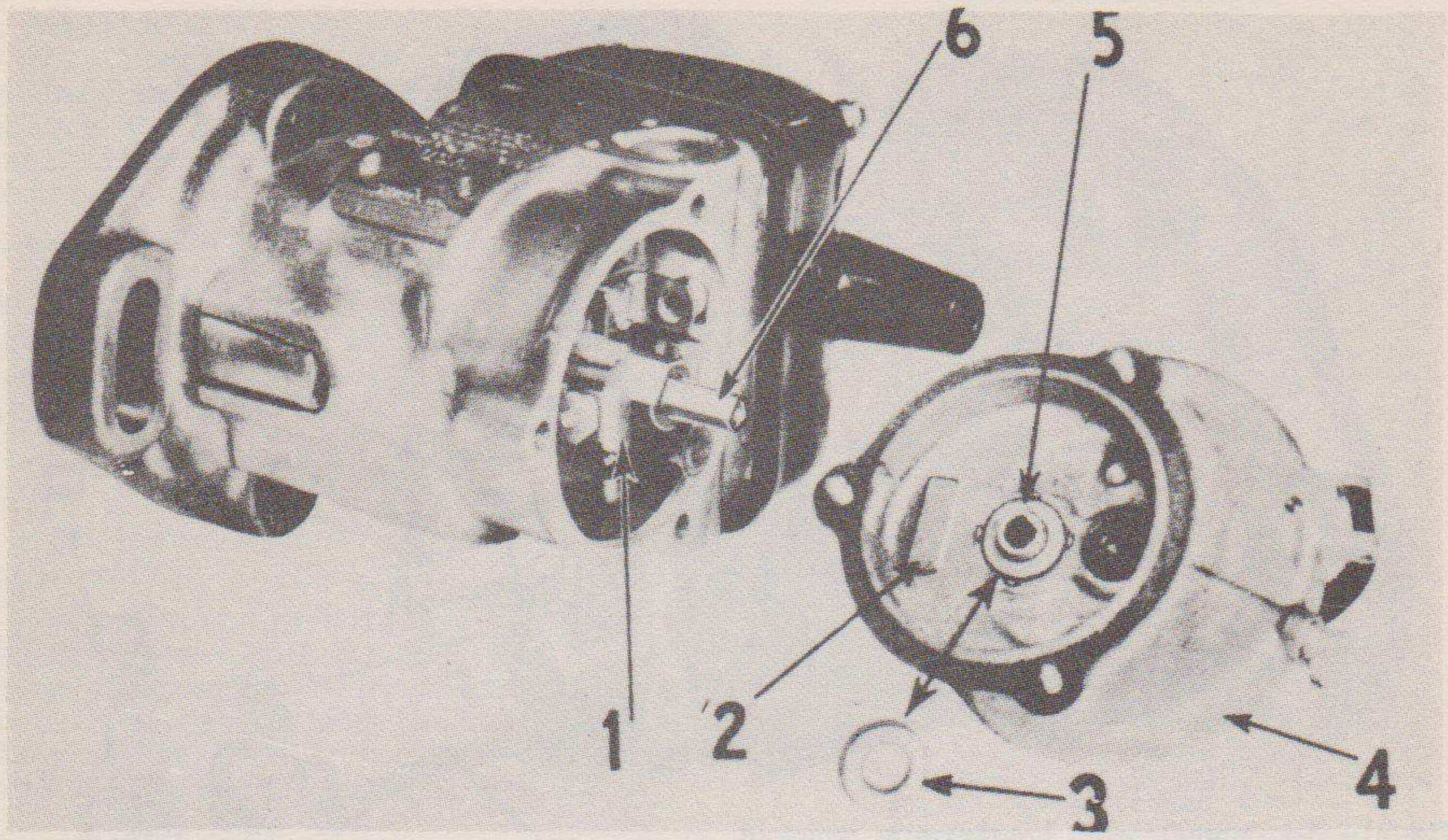

Fig. 19—H-4 magneto with distributor body removed. (1) Spring anchor block. (2) Distributor pad. (3) Distributor pinion oil seal. (4) Distributor body. (5) Distributor pinion hub. (6) Flat on end of rotor shaft.

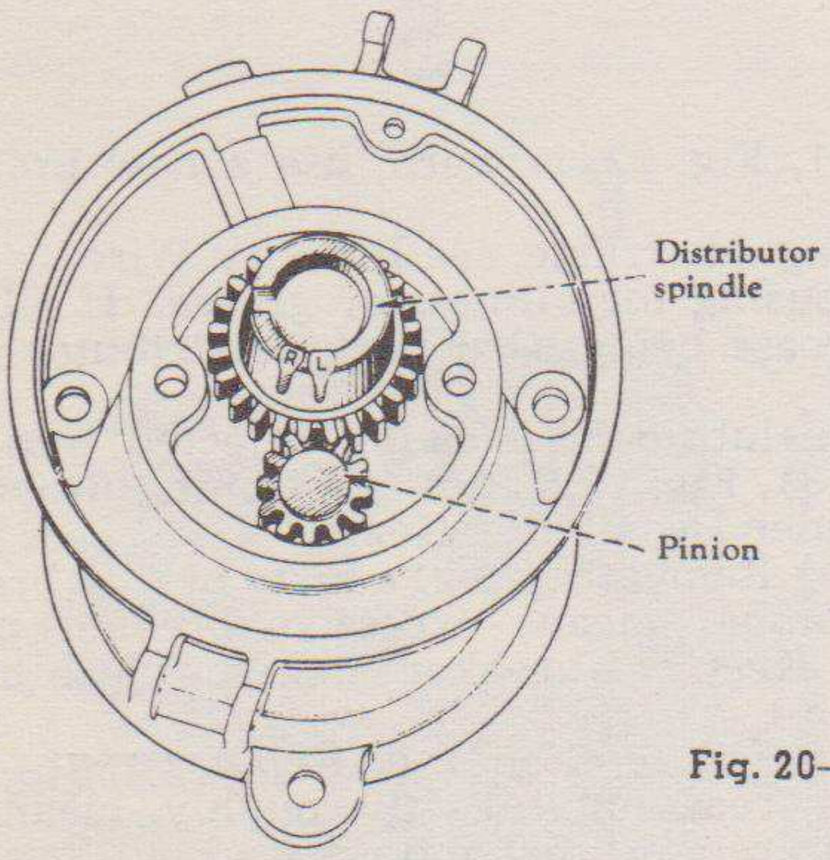

Fig. 20—Timing marks on H-4 distributor spindle and pinion.

(5) Partially fill the remaining chamber with magneto grease. Replace the cover (2), Fig. 18, with the gasket and secure with two screws.

(6) Replace the distributor rotor as directed under that section and secure the distributor cap. Refer to the operator's section for timing where gear housing is removed while magneto is attached to an engine.

10. BREAKER POINTS

a.—General.—The entire breaker mechanism for the magneto is in its own separate internal compartment, thoroughly sealed, against dirt and moisture. This makes it possible to thoroughly grease the mechanism without the usual danger of grit working into the lubricant, causing an abrasive action on working parts.

b.—Removal.—(1) Remove the distributor cap, distributor rotor (Fig. 13), and the distributor body as directed under those sections.

(2) Now the breaker arm assembly (6) and spring anchor block (5), Fig. 21, can readily be inspected and removed for any re-working required.

(3) The spring anchor block (5) can be removed by unscrewing the nut that secures it to the breaker arm and primary leadout wire spring anchor terminal (2), Fig. 25.

(4) The stationary point (1), Fig. 21, can be removed by running out one screw.

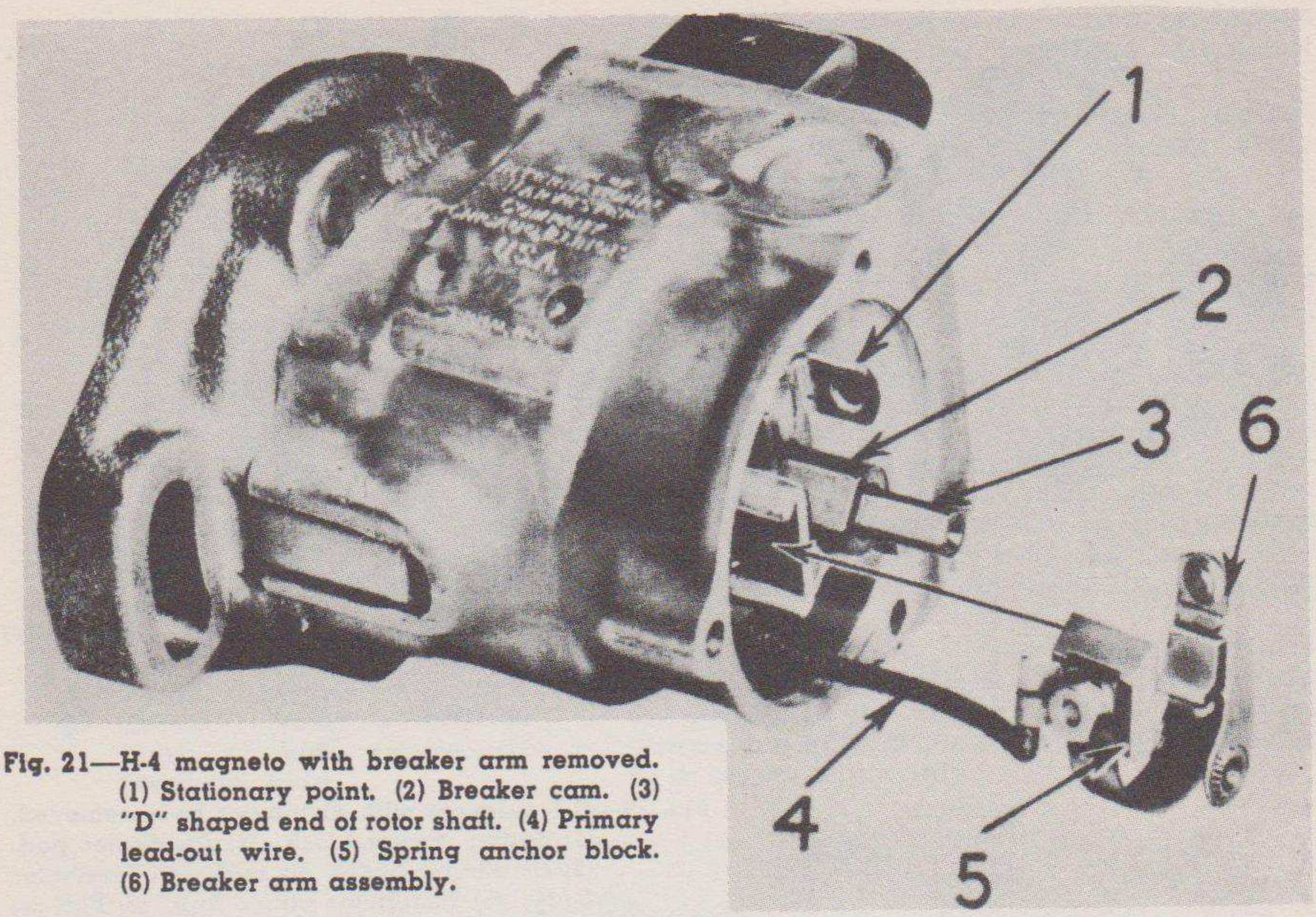

Fig. 21—H-4 magneto with breaker arm removed. (1) Stationary point. (2) Breaker cam. (3) "D" shaped end of rotor shaft. (4) Primary lead-out wire. (5) Spring anchor block. (6) Breaker arm assembly.

c.—Repair.—(1) If the rubbing block (2), Fig. 22, is worn, use a new breaker arm (3).

(2) To replace the primary wire in the magneto frame, see Primary Wire.

(3) Examine the inside of the breaker housing for oiliness or grease. If oil has been leaking into the breaker housing, the grease being used in the distributor gear case is too thin.

(4) Another possibility is that excessive lubricant is being injected into the distributor gear oil cup, or that the felt seal (3), Fig. 19, is not functioning properly. The replacement of the felt seal is covered under Distributor Gears.

(5) Remember that a dirty or oily breaker chamber means excessive breaker point wear. Keep the breaker chamber clean at all times.

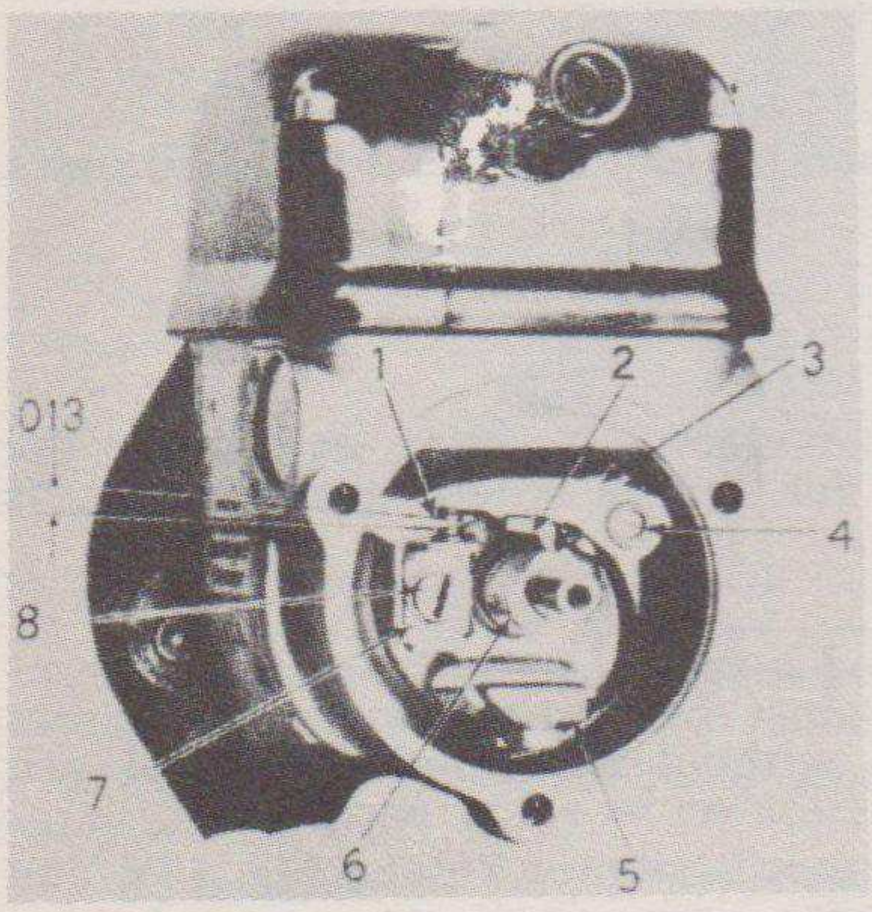

Fig. 22—End view of breaker mechanism. (1) Point opening. (2) Rubbing block. (3) Breaker assembly. (4) Breaker arm pivot recess (fill with magneto grease). (5) Spring anchor block. (6) Breaker cam. (7) Stationary point. (8) Adjusting screw.

d.—Reassembly and Replacement.—(1) Before reassembling, thoroughly clean all parts to remove dirt and rgease.

(2) Apply a light coating of magneto grease to the breaker cam to prevent rusting.

(3) Re-install the fixed breaker point (7), Fig. 22, leaving the screw (8) slightly loose until the point opening is adjusted.

(4) Secure the anchor block and primary spring terminal (2), Fig. 25, to the breaker arm to the magneto. Do not flatten the spring terminal (2) and be careful that it does not touch any part of the magneto frame.

(5) When reinstalling the anchor block (5), Fig. 22, do not push it tight against the magneto body frame, but allow it to stick out far enough so that it is pushed into place by the distributor pad (2) onto the distributor body (4) Fig. 19. For proper adjustment and timing see the operator's section.

(6) Replace the body gasket and body an dsecure it with three screws as outlined under Distributor Gears.

(7) Replace the distributor rotor, and distributor cap.

11. BREAKER ARM CAM

The breaker arm cam (2), Fig. 21, should last indefinitely if it is properly lubricated. If the cam should become worn, it is designed so that it can be replaced. The cam is a press fit on the shaft and fits in only one way.

12. CONDENSER

a.—Removal.—(1) To remove the condenser (3), Figs. 23 and 24, with the coil in place, bend lock (7) from the flat on the condenser terminal screw (8). The screw can the be removedwith the lock and outer bakelite washer (6).

(2) Remove the coil cover; run out four screws.

(3) Remove screw (2) which holds the condenser clamp.

(4) Remove the flat plate (11) which is held by two screws. Push the condenser back into the frame and remove the inner washer (5) and two primary wires (9), from the condenser terminal. The primary wire from the breaker arm to the condenser is shown as (1) in Fig. 25.

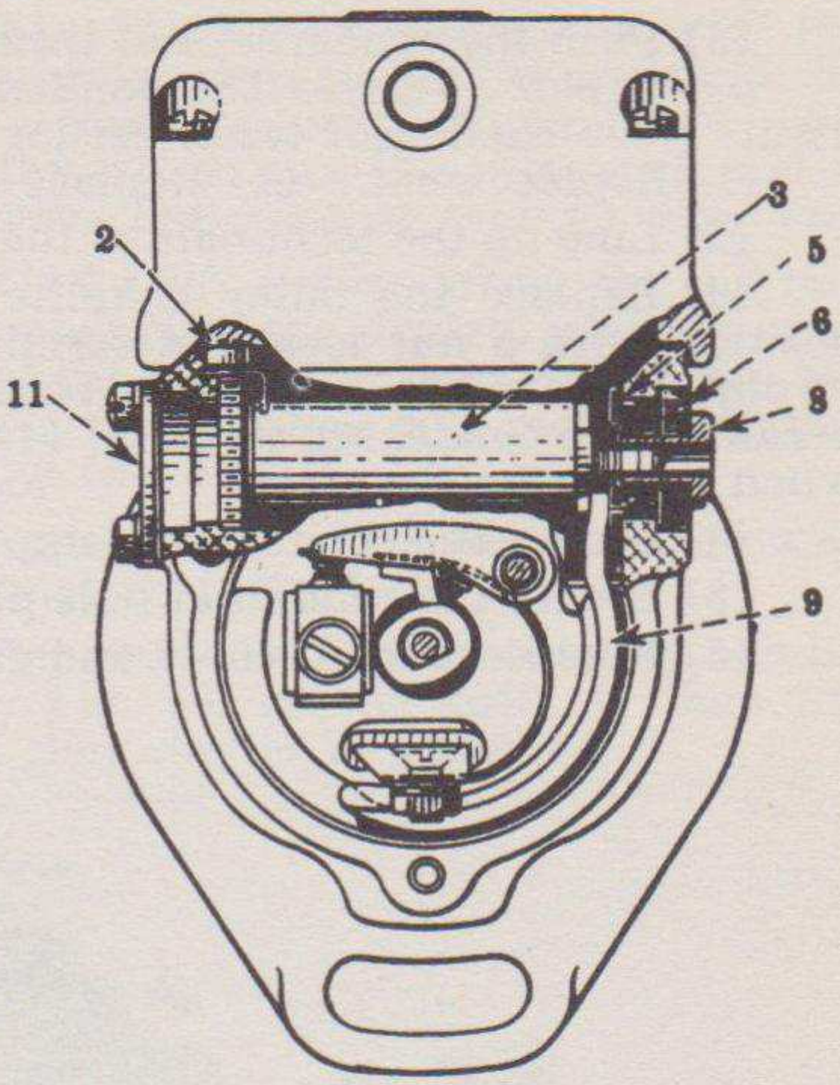

Fig. 23—Cross section view of H-4 condenser assembly showing the construction. (1) Condenser hole cover plate. (2) Condenser clamp and screw. (3) Condenser. (5) Inner bakelite washer. (6) Outer bakelite washer. (8) Terminal screw. (9) Condenser primary wire.

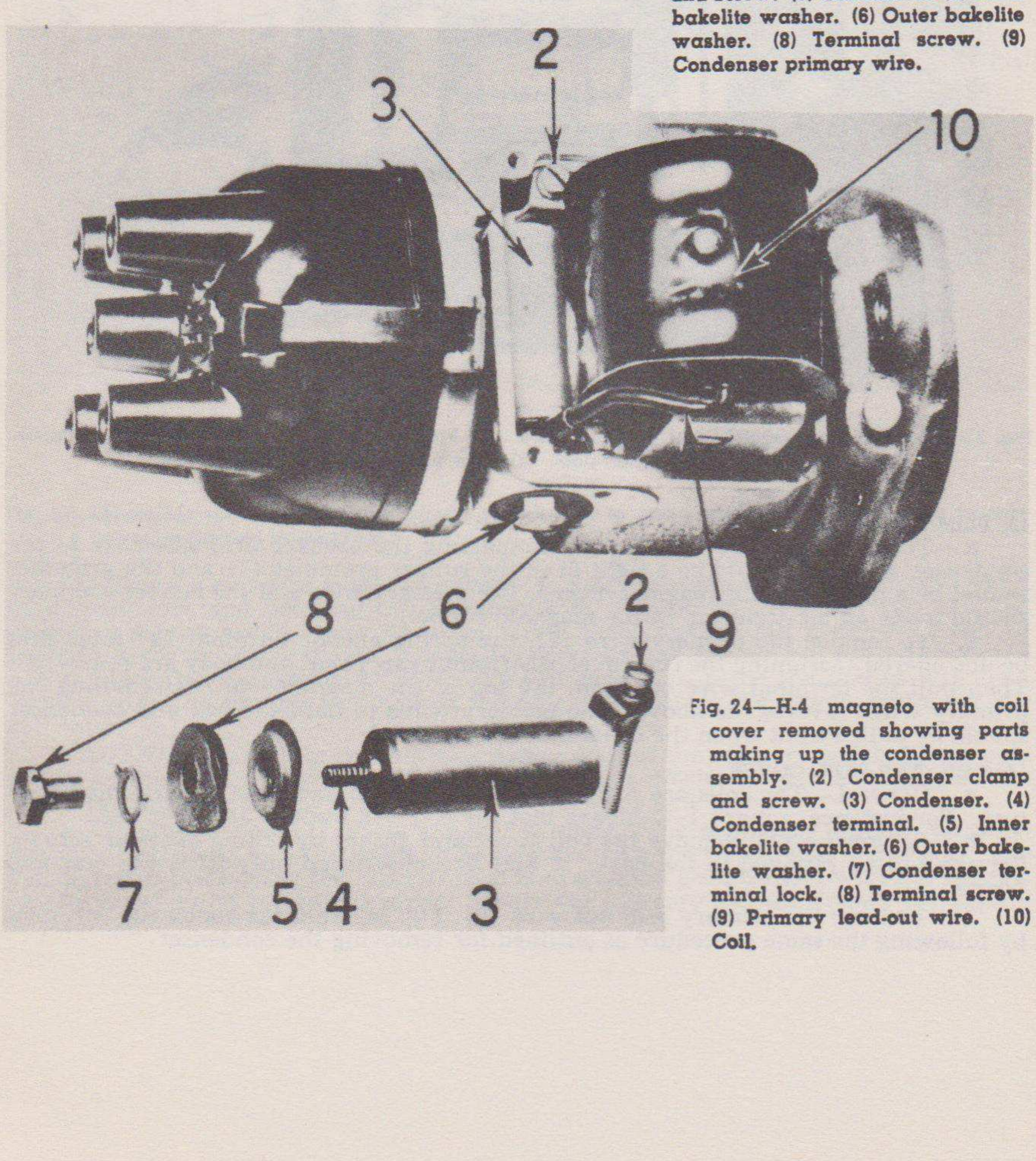

Fig. 24—H-4 magneto with coil cover removed showing parts making up the condenser assembly. (2) Condenser clamp and screw. (3) Condenser. (4) Condenser terminal. (5) Inner bakelite washer. (6) Outer bakelite washer. (7) Condenser terminal lock. (8) Terminal screw. (9) Primary lead-out wire. (10) Coil.

(5) Push the condenser out through the hole in the side of the magneto.

b.—Repair (Test).—The condenser can be tested with the conventional equipment. Neon condenser tester set for 200 volts will give a satisfactory test.

c.—Replacement.—(1) Replace the inner bakelite washer (5), Figs. 23 and 24.

(2) Line up the terminals of the primary wires and insert the condenser.

(3) Replace the outer bakelite washer (6) and secure the condenser (3) in position with a nut lock and terminal screw (8). When tightennig the condenser terminal screw (8) there is a possibility of breaking the bakelite washer (6) or breaking the condenser terminal (4). Do not apply too much pressure to the wrench when tightening the screw.

(4) Secure the condenser clamp and screw (2).

(5) Secure the condenser hole plate and gasket (11) with capscrews and washers.

(6) Replace the coil cover and gasket and secure them with 4 screws.

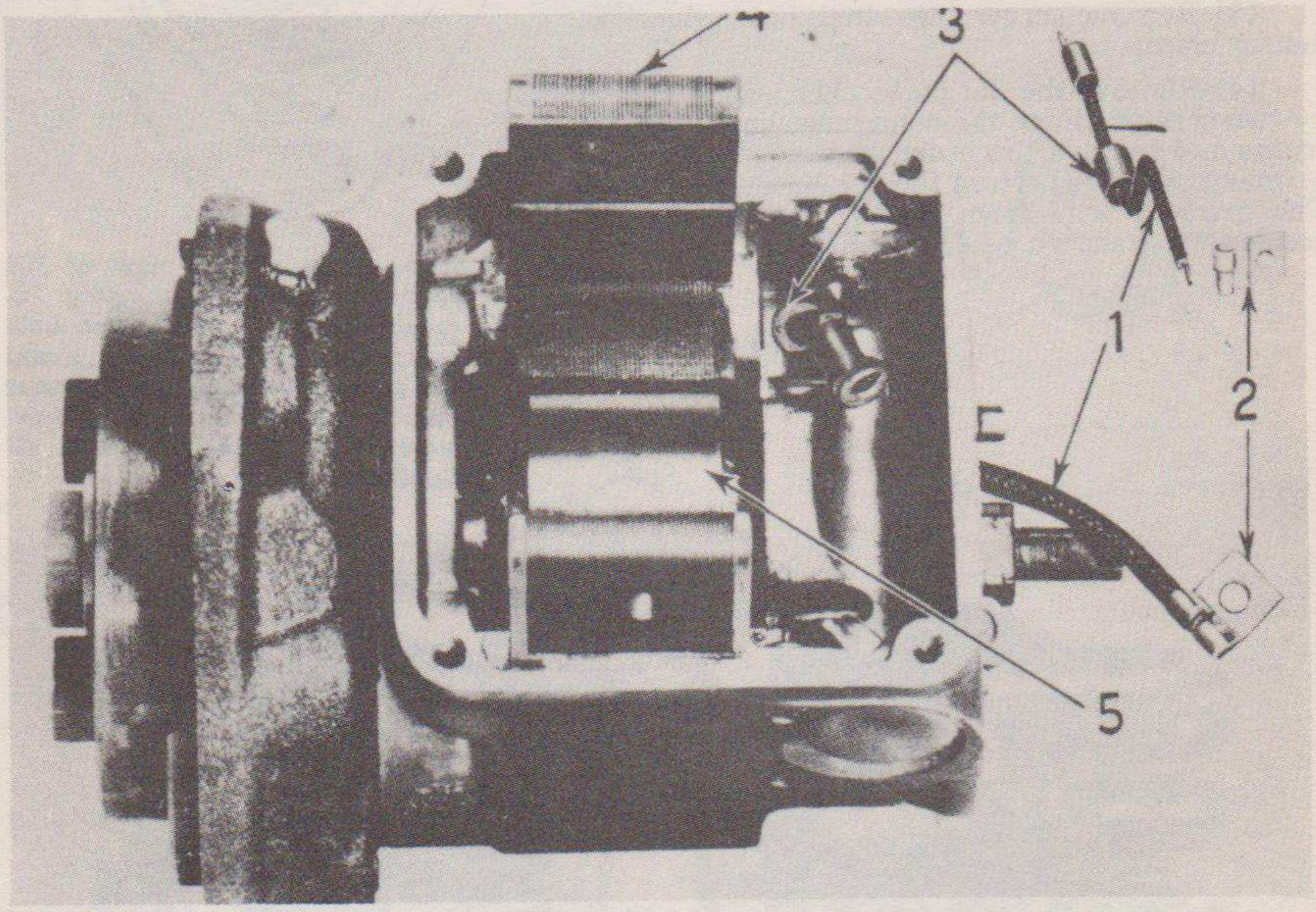

Fig. 25—Location and assembly of primary wire. (1) Primary wire. (2) Spring anchor terminal. (3) Rubber grommet. (4) Coil inter-pole. (5) Rotor magnet bridging air-gap.

13. PRIMARY WIRE

a.—The primary wire (1), Fig. 25, connecting the breaker arm assembly to the condenser terminal should be a tight fit in the rubber grommet (3) and the grommet should be a tight fit in the magneto frame. The primary wire and the rubber grommet should make an air-tight job in the magneto frame.

b.—To remove the primary wire (1), the spring anchor terminal (2) must first be unsoldered (assuming the coil cover, distributor cap, rotor, and body are removed). Then pull the terminal wire out from the top of the magneto. In reassembling the primary wires reverse the above. The primary wires to both the coil and condenser should be pulled tight when the condenser is assembled.

14. COIL AND COIL COVER

a.—General.—The coils are marked as to the month and year of their manufacture. For instance, a mark 1-42 means that the coil was built in January, 1942.

b.—Removal.—(1) Remove the coil cover and gasket by taking out four screws. Screws will be retained in the cover if they are unscrewed only from the magneto frame.

(2) Remove the primary lead out wire (9), Fig. 24, from the condenser terminal by following the same procedure as outlined for removing the condenser.

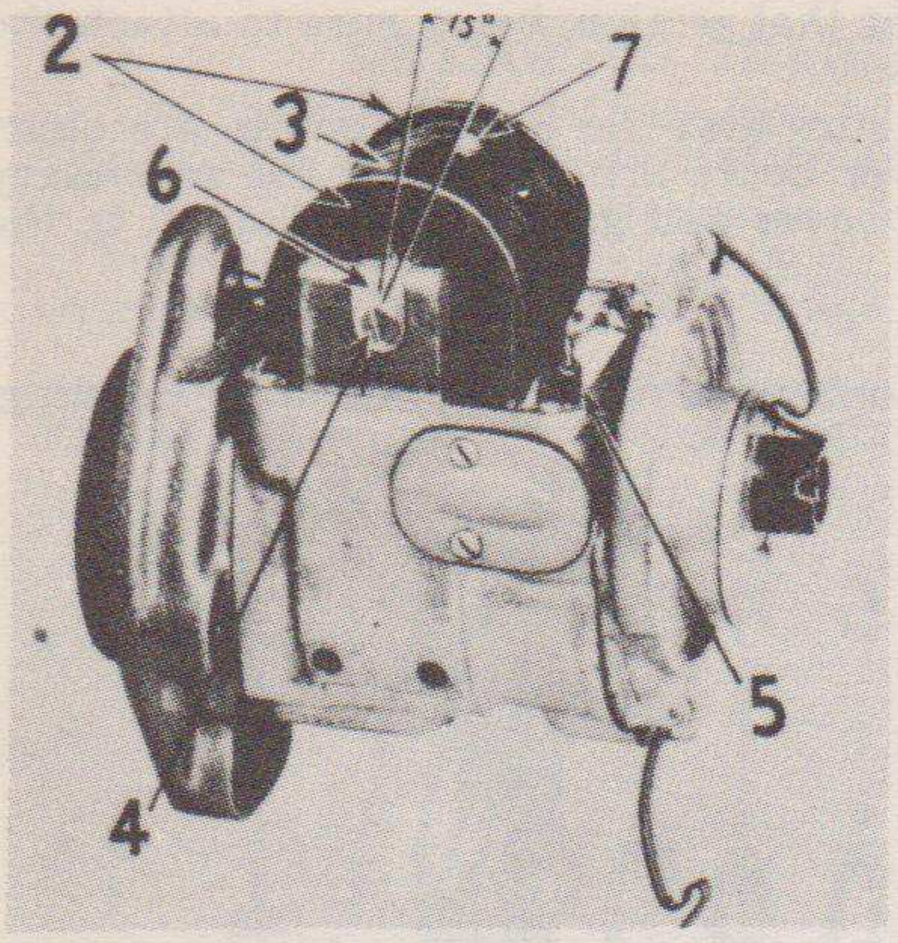

Fig. 26—Coil mounting in H-4 magneto. (2) Coil insulators. (3) Coil. (4) Coil core holding screw, countersunk. (5) Condenser to breaker wire. (6) Coil grounding strip. (7) Secondary lead-out terminal.

(3) Fig. 26 shows the magneto with the coil cover removed; it shows the coil strip (6) attached under the countersunk screw (4). Remove the two screws (4) from each end of the coil core. The coil may then be taken out.

IMPORTANT: Before lifting the coil out, turn the magnet to the neutral position or so the pole of the magnet bridges the air gap between the end of the coil pole pieces as shown with arrow (5), Fig. 25.

c.—Test.—(1) The coil can be tested with conventional equipment.

d.—Repair.—(1) Inspect the end insulators (2), Fig. 26, of the coil. If they are damaged they should be renewed.

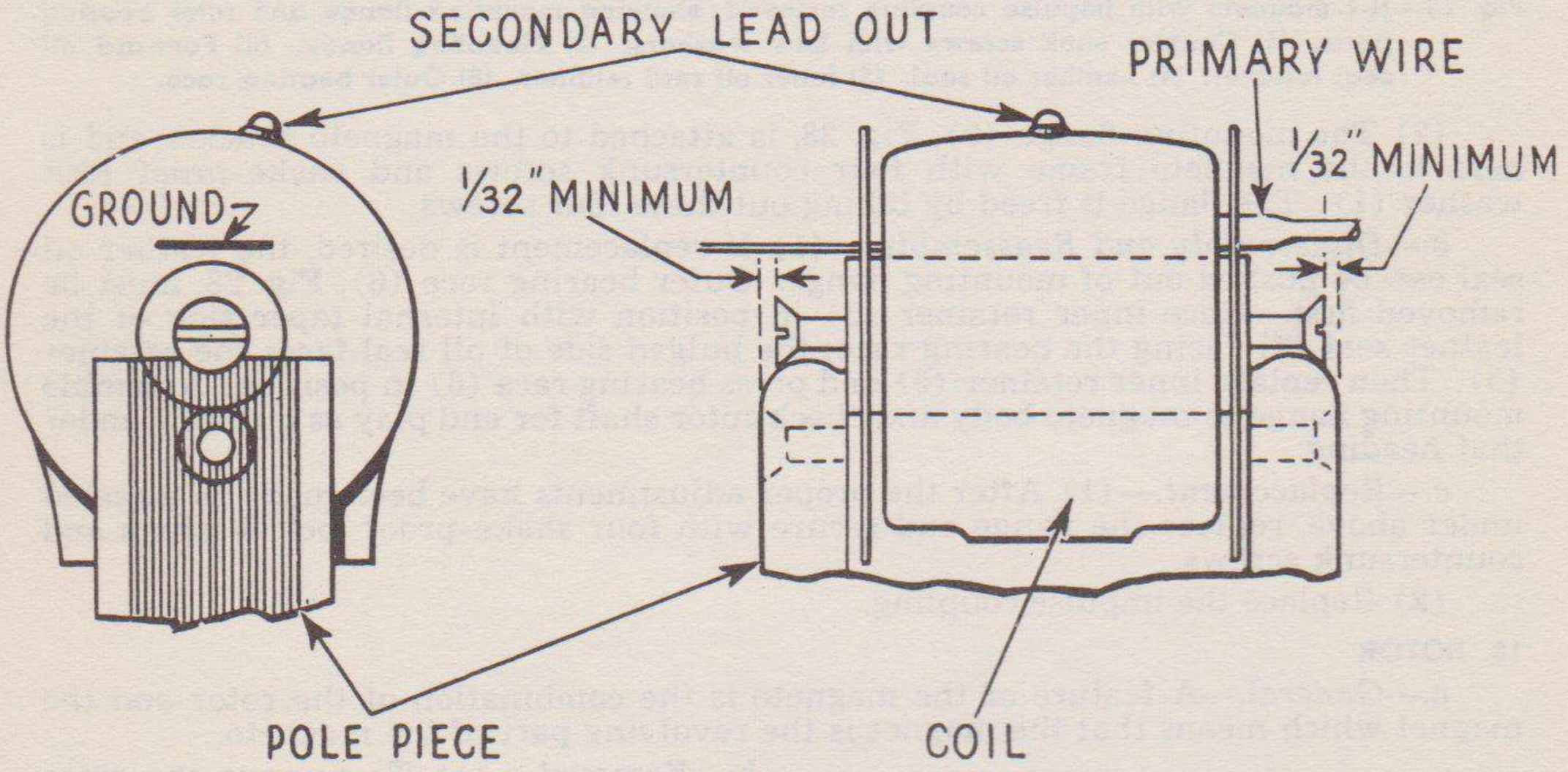

Fig. 27—Assemble coil core mounting screws to coil core to make sure they do not bottom in core when assembled in magneto.

(2) Test the coil core mounting screw (4) length by bottoming the screws lightly in the coil core and pressing the assembly into position as shown in Fig. 27. The mounting screws are 5/8" long. If either screw head does not fall back of the face of the pole piece by $\frac{1}{32}$" as shown, it must be removed and enough cut off the threaded end to meet this requirement. When the coil core is in place the screws will then tighten up in the countersunk hole of the pole piece before the screws bottom in the coil core.

CAUTION: Do not file or otherwise deface ends of the coil core or face of the pole pieces as this will impair the magnetic circuit and efficiency of the magneto. The coil core should be a tight hand press fit between the pole pieces.

e.—Replacement.—(1) Press the coil in place. The secondary leadout terminal (7), Fig. 26, should be at an angle of 15 degrees with the center line of the coil. The reason for so positioning the coil terminal is to secure a good contact with the secondary terminal outlet in the coil cover. Secure the coil core holding screws (4) tightly in position.

(2) Replace the condenser as directed under that section, being sure to attach the primary coil lead out to the condenser terminal.

(3) Before replacing the coil cover, make sure that the contact points are clean and that the secondary lead out in the coil cover bears firmly against the secondary leadout terminal (7), Fig. 26. Replace the coil cover and gasket and secure it to the magneto frame with four screws.

15. MOUNTING FLANGE

a.—Removal.—(1) Remove the impulse coupling as directed under that heading.

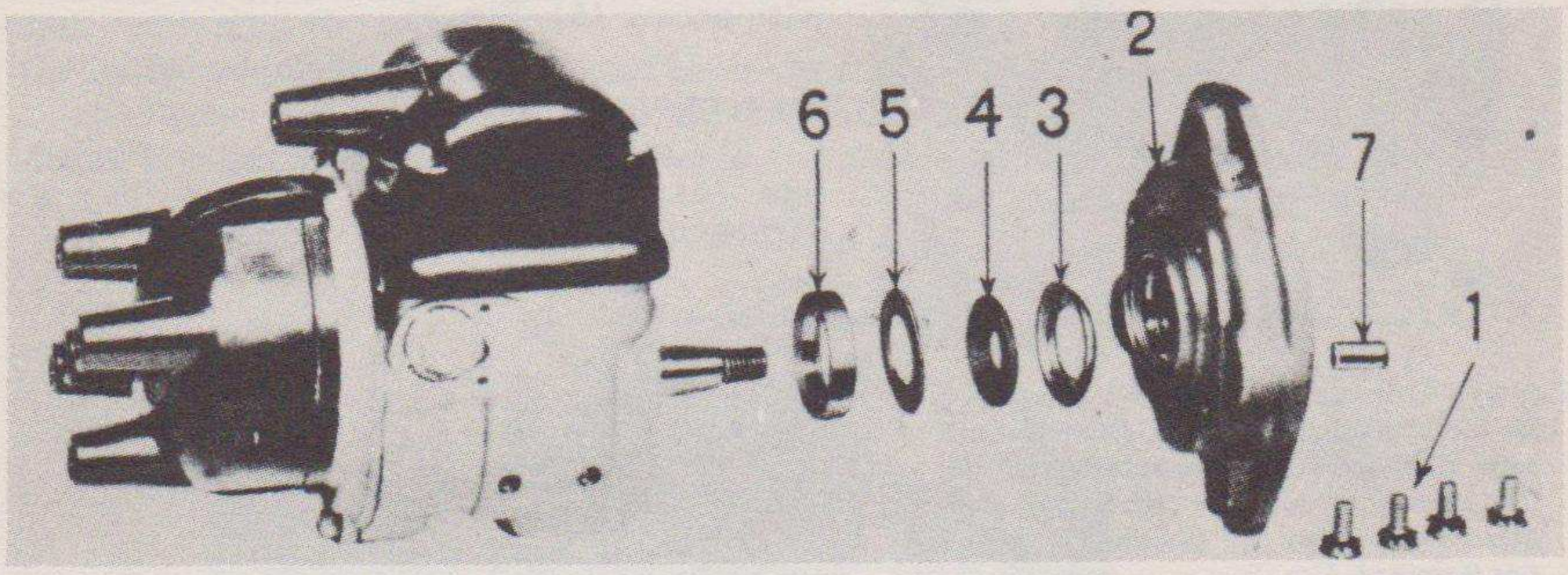

Fig. 28—H-4 magneto with impulse coupling removed, showing mounting flange and rotor bearing parts. (1) Counter sunk screws with lock washers. (2) Mounting flange. (3) Forward oil seal retainer. (4) Leather oil seal. (5) Inner oil seal retainer. (6) Outer bearing race.

(2) The mounting flange (2), Fig. 28, is attached to the magneto bracket and is held to the magneto frame with four countersunk screws and shake-proof lock washer (1). The flange is freed by taking out these four screws.

b.—Disassembly and Reassembly.—(1) If replacement is desired, the leather oil seal can be pushed out of mounting flange. Outer bearing race (6), Fig. 28, must be removed first. Place inner retainer (3) in position with internal taper side of the leather seal (4) facing the bearing race; the bulged side of oil seal faces the retainer (3). Then replace inner retainer (5) and press bearing race (6) in position. Assemble mounting flange to magneto body and check rotor shaft for end play as outlined under that heading.

c.—Replacement.—(1) After the proper adjustments have been made as directed under above, replace the flange and secure with four shake-proof lock washers and countersunk screws.

(2) Replace the impulse coupling.

16. ROTOR

a.—General.—A feature of the magneto is the combination of the rotor and the magnet which means that the magnet is the revolving part of the magneto.

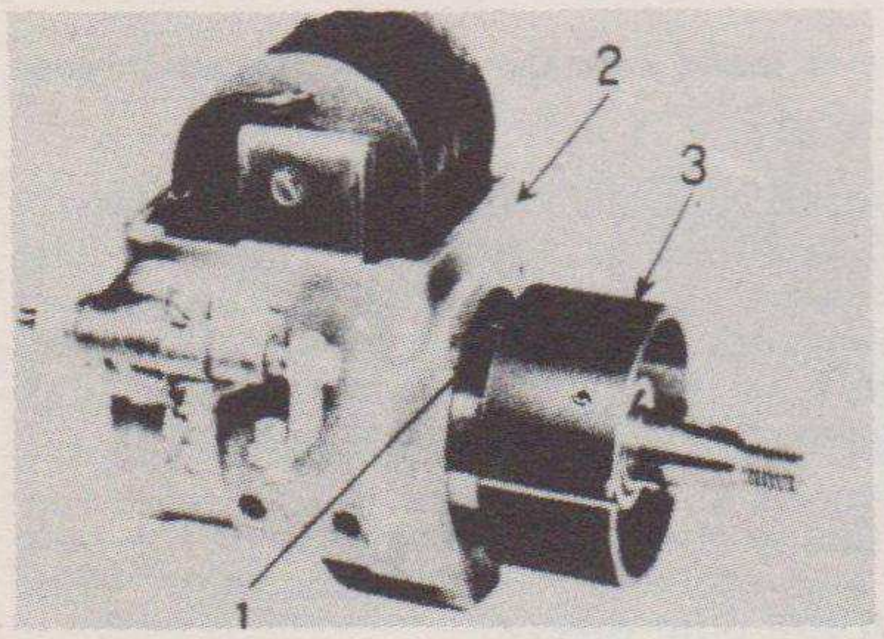

Fig. 29—Removing magneto rotor. Remove rotor (1) from magneto frame (2). Slide keeper No. 57314 D (3) over rotor poles before rotor is completely out of frame.

b.—Removal.—(1) To remove the rotor and bearings, it is necessary to remove the impulse coupling and mounting flange as directed under those sections.

(2) Then slide the rotor magnet into a keeper (3), Fig. 29, as it is being removed from the magneto frame. Always have the rotor in the keeper when it is out of the magneto frame. Use extreme care to see that the rotor does not pick up dirt and metal particles. The keeper is available as a service part.

c.—Disassembly.—(1) The bearing outer races (6), Fig. 28, can be removed and replaced with service tools as outlined under the MOUNTING FLANGE heading.

(2) The inner bearing race can be readily removed from the rotor by using a puller and adapter as shown in Fig. 30. It is necessary to remove the inner bearing race when removing or inserting rotor shims (2), Fig. 31, for preloading the rotor bearings.

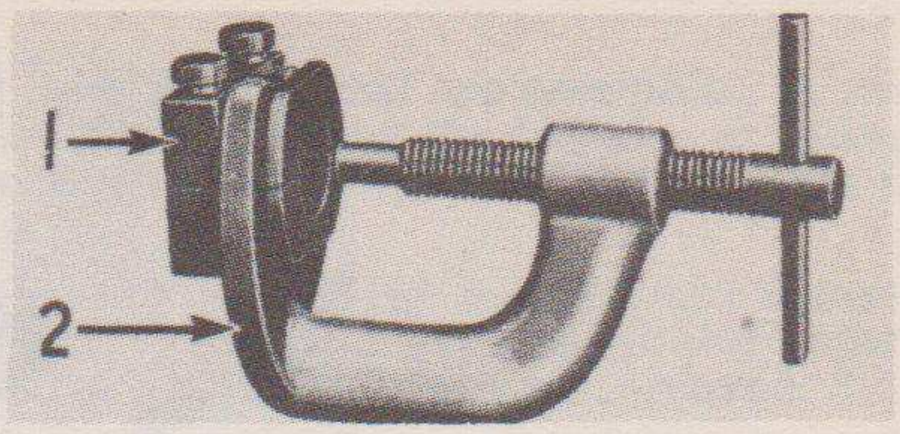

Fig. 30 — Inner race puller tool SE-839. (1) Bearing race adapter. (2) Puller.

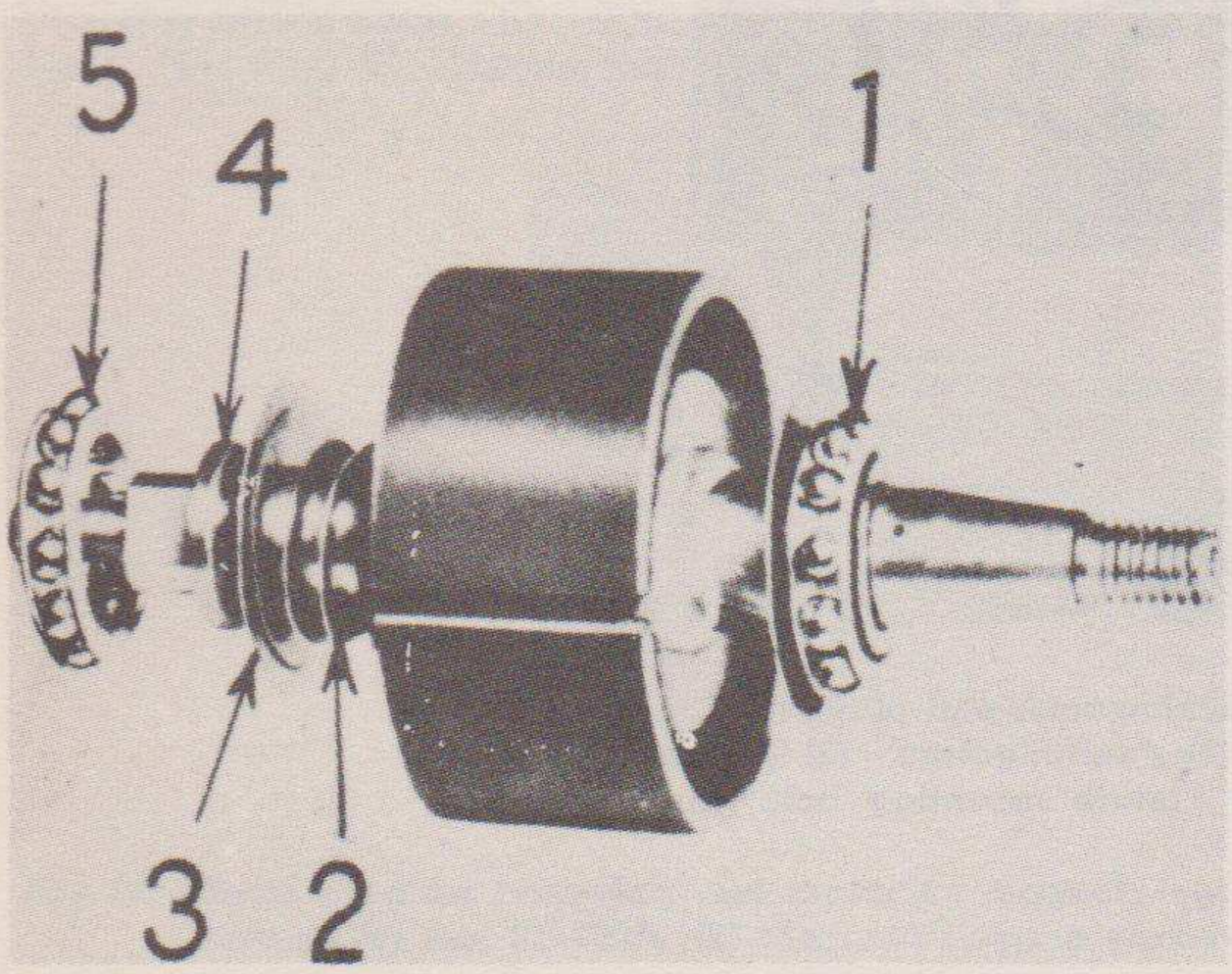

Fig. 31 — H-4 rotor magnet with keeper, bearings, and shims. (1) Forward bearing. (2) Rotor shims. (3) Inner felt retainer. (4) Bearing inner race. (5) Bearing retainer with balls.

(3) When the bearing inner race (4) has been removed, the inner oil flinger (3) and the rotor shims are free.

d.—Reassembly.—(1) Read items 1, 2, 3, and 4 under "Adjustment" following.

(2) Thoroughly clean rotor and bearing parts and reassemble to the rotor approximately the same thickness of shims as was taken out. See Item 4 under Adjustment.

(3) Replace the inner oil flinger (3), Fig. 31, with the upset portion toward the rotor magnet.

(4) Press the bearing inner races (4) firmly in place and replace the bearing retainer with balls (5).

(5) The oil seals in the magneto frame and mounting flange can be replaced as directed under BEARING OUTER RACE AND OIL SEALS.

(6) *IMPORTANT:* The instructions given under "Adjustment" must now be followed carefully and completely for efficient operation of the magneto.

e.—Adjustment.—(1) Thoroughly clean the rotor assembly and bearing races of the old grease and any grit. Re-greasing of the bearings should not be done until they have been checked for end play.

(2) The bearings when assembled at the factory are preloaded .001" to .002". The rotor should never have any perceptible end play after it is assembled properly.

(3) Old bearings and races should be assembled without disturbing shims (2), Fig. 31. Should an end play check, (Fig. 32) reveal that end play is present, no attempt should be made to preload old bearings as this will cause rapid deterioration of the bearings. The recommended procedure when end play exists on old bearings is to replace them.

(4) The distributor body assembly (4), Fig. 19, should be removed to facilitate correct adjustment of the magneto rotor.

(5) Place sufficient shims (2), Fig. 31, in back of the new bearing race to allow a small amount of end play in the rotor shaft after it is completely assembled with the mounting flange in place and the mounting screws (1), Fig. 28 tightened up (end play should be checked with no grease on the bearings). The end play may then be checked with a dial indicator or by making a device as shown in Fig. 32. Then check the end play between the fixture (3), and the end (1) of the rotor shaft (5) with a feeler gauge (2).

990620 O—52——7

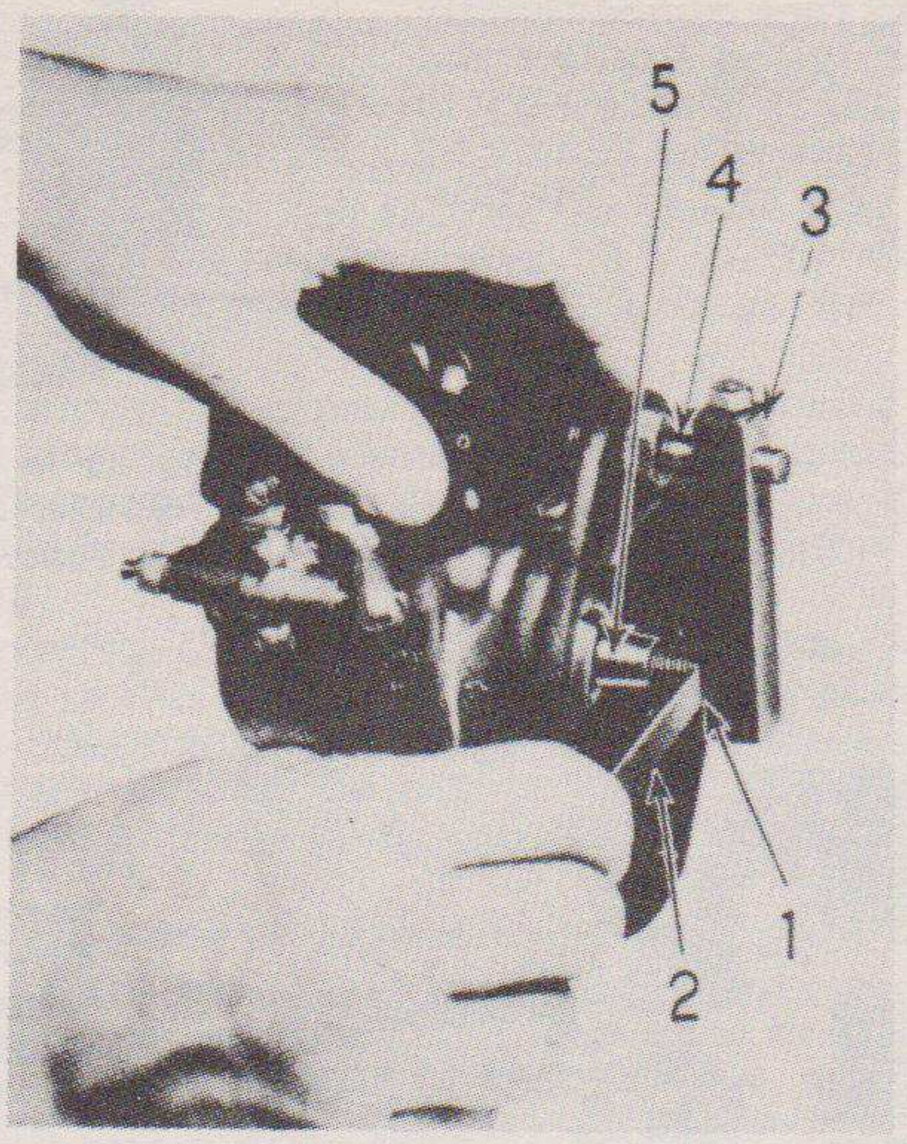

Fig. 32—Checking rotor end play. (1) Checking position. (2) Feeler gauge. (3) Fixture end piece. (4) Fixture mounting bolt. (5) Rotor shaft.

(6) Take two readings of the feeler gauge, one with the rotor as far one way as it will go, and the other with the rotor moved as far in the opposite direction as it will go. The difference in these two readings will be the actual end play. Add .001" to the difference between the two readings, which should be the thickness of the additional shims to be added.

(7) Remove the mounting flange, slide the rotor into the keeper, pull the race from the shaft and then add the required number of shims (2), Fig. 31, in the proper location. Grease the bearings, reassemble the rotor and the mounting flange, and check the rotor for free turning. Be careful not to overfill the bearings with grease; just fill the spaces between the balls of the bearings with magneto grease. The preloading of the bearing should not cause binding of the rotor.

IMPORTANT: Be sure to keep the rotor and bearings clean during this operation. Do not drop the magnet or hit it with any sharp instrument, because it is very brittle and will chip readily.

Extreme care must be exercised to assure that the rotor is free from metal chips before it is assembled into the magneto, as chips may jam the rotor. The magnet is highly magnetised and will draw all magnetic metals to it. Using compressed air is one of the best methods to clean the rotor.

f.—Replacement.—(1) Replacement of the magneto rotor assembly and mounting flange is covered under "Adjustment."

(2) Replace the impulse coupling, distributor body, distributor rotor and distributor cap as directed under those various headings.

17. MAGNET

As stated before, the magnet is part of the rotor and is the revolving member of the magneto. The magnet, made of the alloy known as Alnico (an aluminum, nickel, cobalt and iron alloy), is cast directly into sand moulds. After it is once thoroughly magnetized, this magnetic material should never lose its magnetism if carefully handled.

It cannot be stressed too emphatically the importance of being careful to guard against metal chips adhering to the magnet. The use of compressed air is one of the best methods of cleaning the magnet and rotor before assembly into the main frame of the magneto. The clearance of the magnet and the pole pieces of the magneto is so close that any chips adhering to the magnet may cause the rotor to become jammed.

18. BEARING OUTER RACE AND OIL SEALS

a.—Removal.—(1) The front bearing outer race and oil seal are assembled in the mounting flange (2), Fig. 28; they are accessible after removing the impulse coupling and mounting flange as directed under those sections. The purpose of the oil seals is to keep lubricating oil out of the magneto body.

(2) The rear bearing outer race and oil seal are assembled in the main frame. The magneto rotor (see that heading for removal), distributor cap, distributor rotor, and distributor body assembly as well as the above mentioned must be removed.

b.—Disassembly.—(1) The rotor shaft leather seal (4), Fig. 25, and the two retaining members (3) and (5) are held in place by the press fit of the rotor ball bearing outer race (6). The rotor bearing races (6) can be removed with a puller, Item (1), Fig. 33. Races may be replaced with a tool, such as Item 2.

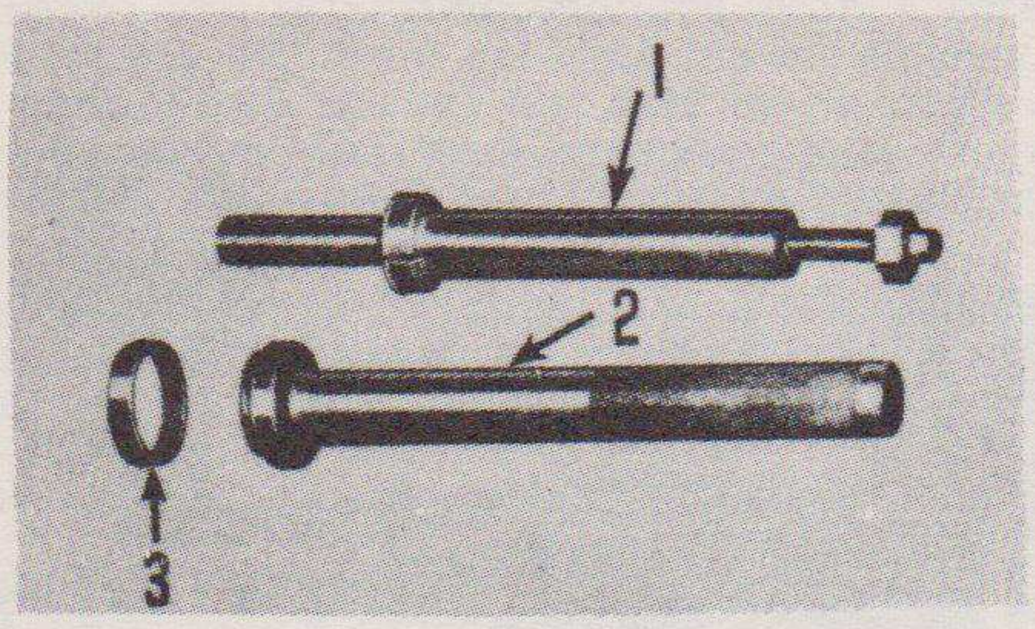

Fig. 33—Tools used for removing and replacing magneto outer bearing races. (1) Magneto bearing race puller tool SE-1020. (2) Magneto bearing race replacer tool SE-1021. (3) Outer bearing race.

(2) The magneto outer bearing race in both housing and magneto mounting flange can be readily removed. Loosen the expander and insert the tool into the bearing race. Manipulate the split sleeve flange through the bearing race and hold it against the felt retainer. Now draw up on expander by applying a wrench to flats on the threaded end of the expander and turning in a counter-clockwise direction until a definite pressure is felt. Then tighten the hexagon nut, and carefully drive the bearing race from place.

c.—Reassembly.—(1) Fig. 28 shows the sequence of assembly of the bearing race and oil seal. The internal taper side of the leather oil seal (4) faces the bearing race (6) and the bulged side of the oil seal retainer (5) faces the oil seal (4). Careful centering and proper arrangement of the oil seal produces maximum compression and efficiency.

(2) Before replacing outer bearing races make sure felts and retainers are correctly assembled in place. Set the bearing race on end of the tool (2), Fig. 33. A small amount of clean grease will hold the race on the tool. Carefully line up the tool over the hole and drive the race in place.

d.—Adjustment.—If a new bearing race has been installed, the recommended procedure is to remove the complete rotor and bearings and reassemble all parts as covered under the heading of ROTOR (including checking magneto rotor shaft end play).

INDEX

1. GENERAL 28
2. AIR CLEANER 28
3. LUBRICATION 28
4. CYLINDER HEAD AND VALVE ASSEMBLY 30
5. CAMSHAFT 35
6. CONNECTING ROD, PISTON ASSEMBLIES, AND CYLINDER SLEEVES 36
7. CRANKSHAFT 40
8. CRANKCASE FRONT COVER 43
9. TIMING GEAR TRAIN 44
10. ENGINE REMOVAL 44

ENGINE

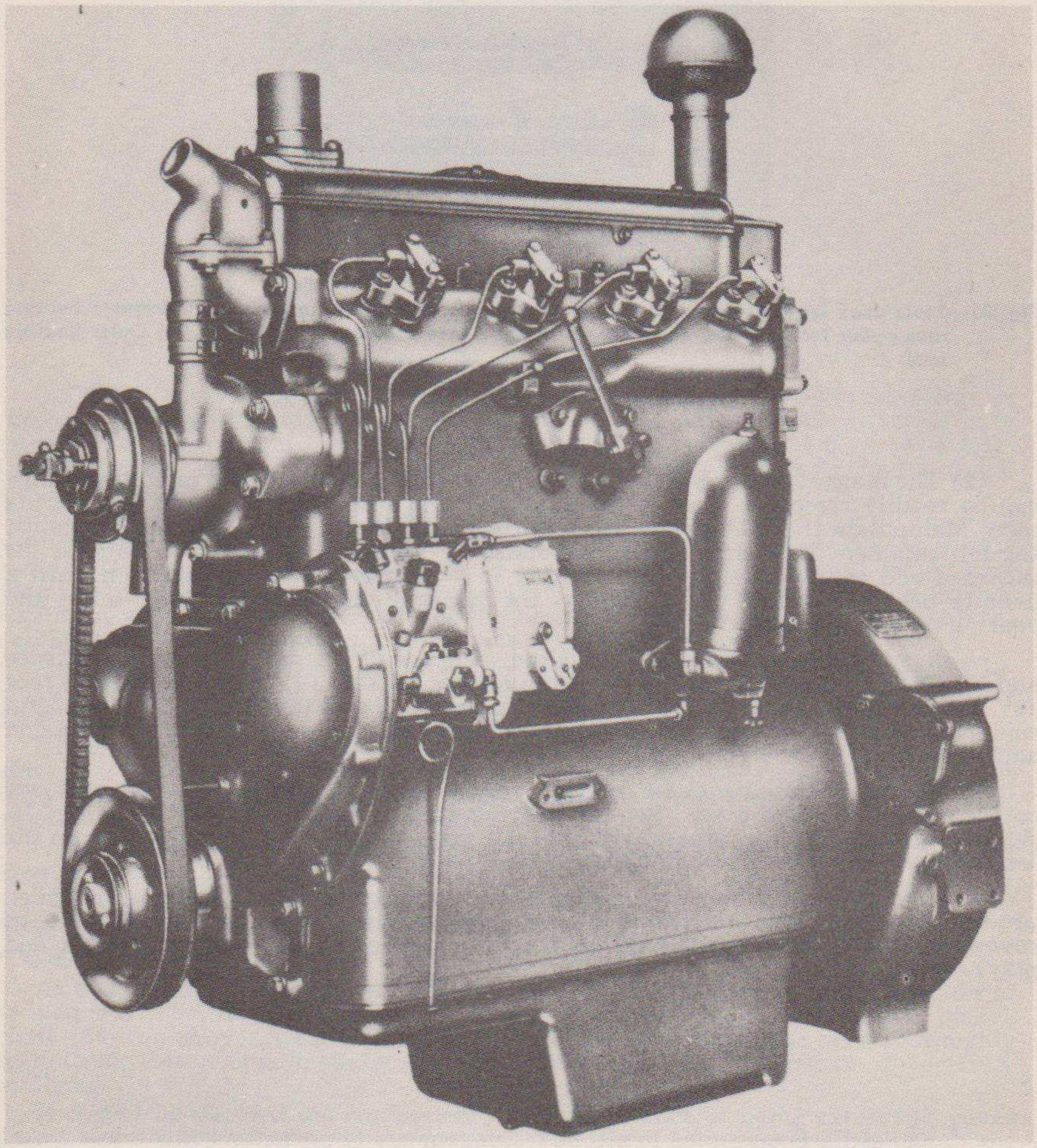

Fig. 34—International UD-14 Diesel engine.

1. GENERAL

Bore and Stroke	4¾ x 6½
Cylinders, No.	4
Cylinders, Type	Wet Sleeve
Displacement, Cu. In. Per Rev.	461
Governed R.P.M.	1350
High Idle Speed	1465
Governed Low Idle Speed	425
Piston Speed, E.P.M. at 1350	1462
Compression Pressure	465
Compression Ratio	13.67 to 1
Fuel	Diesel

2. AIR CLEANER

A Donaldson 9" "Oil Washed" air cleaner with oil cup is attached to the left side of hood sheet at the rear. The intake is provided with a screen to prevent large particles, such as chaff, leaves, etc. from entering the air cleaner. Air passed through the screen, down the center into the oil cup and up through screen to the intake manifold. Reversal of air flow at the base separates dust. Oil carried upward with air as a mist is separated by crimped screen elements, returning oil to the base and washing screens.

The oil cup should be removed for periodical cleaning and refilling with fresh oil to the proper level. Screens should be washed with kerosene. Joints, rubber connections, etc., should be air tight to prevent entrance of dirt particles.

Proper functioning of the air cleaner is important to obtain maximum power from an engine. A restricted air cleaner will cause a loss of power.

3. LUBRICATION

a.—General.

Capacity, U. S. Quarts	16
Full-Pressure System	Yes
Oil Filter, Model	P-20
Oil Pressure, Lbs.	60
Oil Pressure Valve	In Purolator Base

Full force-feed lubricates crankshaft bearings, camshaft bearings, connecting rod bearings, pistons and piston pins, valve mechanism and timing gears.

b.—Oil Pressure.—Oil pressure is controlled by a plunger-type regulating valve located in the Purolator set at 60 lbs. pressure. The oil regulating spring should test 30.6 lbs. at $2\frac{3}{32}$" while the free length is $3\frac{3}{32}$".

Pressure valve O.D. is .900" to .901" and the bore in the base is .905" to .906" or the clearance for the valve is .004" to .006". Be sure the valve slides freely and the spring does not cock the valve in the bore, seating improperly.

Inasmuch as valve springs take a set after continued use, their free length may be somewhat shorter than dimensions listed. The best way to check these springs is to load them with weight specified and to measure their length at this load. This load is equivalent to the conditions existing when the valve spring is in the operating position. Valve springs falling below this standard should be replaced.

c.—Oil Filters.—Two Motor Improvement P-20, paper renewable type, lubricating oil filters are accessibly located on the right side of the engine. A quantity of oil is by-passed from the main circulatory system, through the cleaning element to the crankcase.

Filter elements should be renewed every time oil is changed, or oftener if need be. Have end of the element marked "Top" toward the top of the filter case.

d.—Circulation.—The path of lubricating oil is from the sump and through the "Floato" oil screen from where it is pumped under pressure to the Purolator filter base. From the base, a passage leads to the filter and is known as the bypass. A portion of the oil is bypassed through the filters, the amount depending upon the cleanliness of the filter element. The valve in the Purolator base maintains the proper pressure on all bearings and at the same time protects the system and pump mechanism when thick oils caused by severe weather conditions build up high pressures in the oil lines. The oil passed through the filter is returned to the sump as is the oil that is bypassed by the pressure relief valve. Oil from the filter base is discharged into the rifle-drilled passages in the crankcase from where it is directed to the main bearings.

Oil from the main bearings passes through drilled passages in the crankshaft to the connecting-rod bearings, then through drilled passages in the connecting rods to the piston pins.

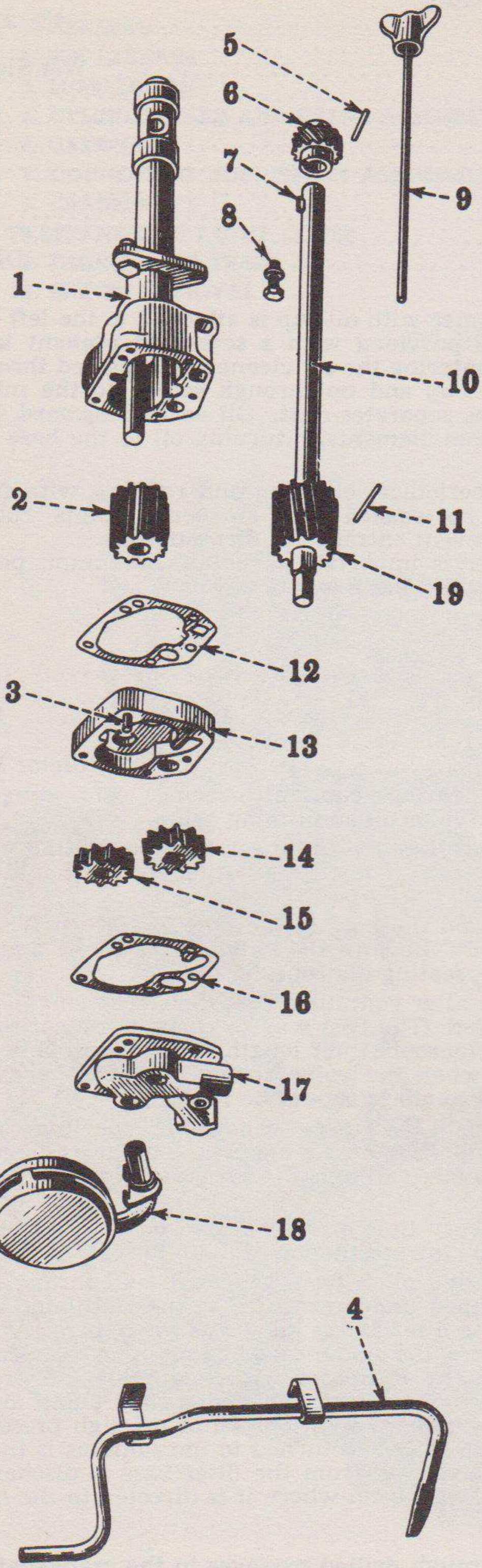

Fig. 35—Exploded view of oil pump.

Passages from the main bearings also lead to the camshaft bearings, and timing gears. Another passage leads from the front camshaft bearings and extends upward through the crankcase to the valve rocker mechanism. A slot in the bearing journal allows a small amount of oil to flow to the rocker arms with each revolution of the camshaft. The valve lever shaft is hollow and distributes oil to valve rockers and valve stems. The oil is drained back to the sump through the valve push-rod holes in the crankcase and in so doing lubricates valve tappets and cams.

e.—Oil Pump.—(1) *General.*—The double-gear type oil pump has two gears on the pump drive shaft and two gears on the idler shaft. The upper main set of gears supplies oil to the lubricating system; the auxiliary set of gears pumps oil from the shallow end of the oil pan back to the sump when the unit is operating upgrade.

(2) *Removal.*—(a) The engine must be removed from the motor grader. (See Engine Removal in this section).

(b) Remove the oil pan from the engine and remove capscrews holding the return pipe (4), Fig. 35.

(c) Remove the pump assembly from the engine by removing the two body capscrews (3) from the flange above the main body (1) of the pump.

(3) *Disassembly.*—(a) Pull the cotter key from the cover (17) and remove the pump float (18).

(b) Remove the capscrews holding the cover (17).

(c) The cover (17), gasket (16), gears (14) and (15), gear housing (13), gasket (12), and gear (2) can now be disassembled.

(d) Check for end play in the shaft (10). If necessary, drive out the pinion pin (5) and remove the drive pinion (6) and the key (7) from the drive shaft (10).

(e) Pull the drive shaft (10) with the body gear (19) from the body (1).

(f) Body gear (19) can be removed from the drive shaft (10) by driving out pin (11) and pulling gear from the shaft. Remove the key from the shaft.

(4) *Repair and Service.*—Check all the gears, body, gear housing, drive shaft, and cover for wear. The idler shaft in the body is a press fit and is located with the end of the shaft $2\frac{5}{32}$" from the base of the body. Back lash in gears can be .003" to .006". A dowel pin locates the cover, gear housing, and body.

The idler shaft should be concentric with the body bore and square with the bottom of the gear chamber within .001". The drive and idler gears should have .0065" clearance between the body bore and the outside diameter of the gear. Use ½" wide, .0065" feeler gauge between the body and gear; turn the pinion several revolutions when checking the clearance.

(5) *Assembly.*—(a) Place the key in the shaft (10) and assemble the body gear (19), and then drive in the pin (11). Peen the ends of the pin to hold it in place. Take care not to strike the gear, and be sure that the pin does not stick up in the bottom of the tooth.

(b) Place the drive shaft (10) in the body (1). Assemble the key (7) and the pinion gear (6), replace the pinion pin (5), and peen the ends of the pin. Be sure the pin does not interfere with the bottom of the tooth and that the gear is not damaged when the pin is peened.

(c) Assemble the idler gear (2) on the idler shaft, and then put it in the body (1). Place a thin coat of pressure-gun grease on the surface where gasket (12) contacts the gear housing (13), to keep them in line while assembling.

(d) Assemble the gear housing (13) and the gasket (12) to the body. The dowel pin (3) in the gear housing locates the two parts. The gasket (12) is .006" thick and serves as a shim to obtain .003" to .005" end play of the drive shaft when the pump is completely assembled.

(e) Place the auxiliary body gear (14) on the drive shaft (10) and the auxiliary idler gear (15) on the idler shaft. Assemble the gasket (16) to the cover (17), replace the capscrews and tighten. The driveshaft gears should turn freely when assembled.

(f) If the return pipe (4) should be loose in the cover (17), remove it and give it another coat of babbitt. Scrape off any surplus material that interferes with the pipe being assembled as a tight fit in the cover.

(g) Replace the pump float (18) in the cover (17), inserting the cotter key in the hole in cover to hold the float in place.

(6) *Replacement.*—(a) Place the oil pump in the crankcase, replace the capscrews and tighten. Lock the capscrews by placing a wire through the holes in the heads and twisting the ends together.

(b) Replace the capscrews holding the return pipe to the crankcase.

(c) Replace the oil pan and fill with the proper amount of lubricating oil.

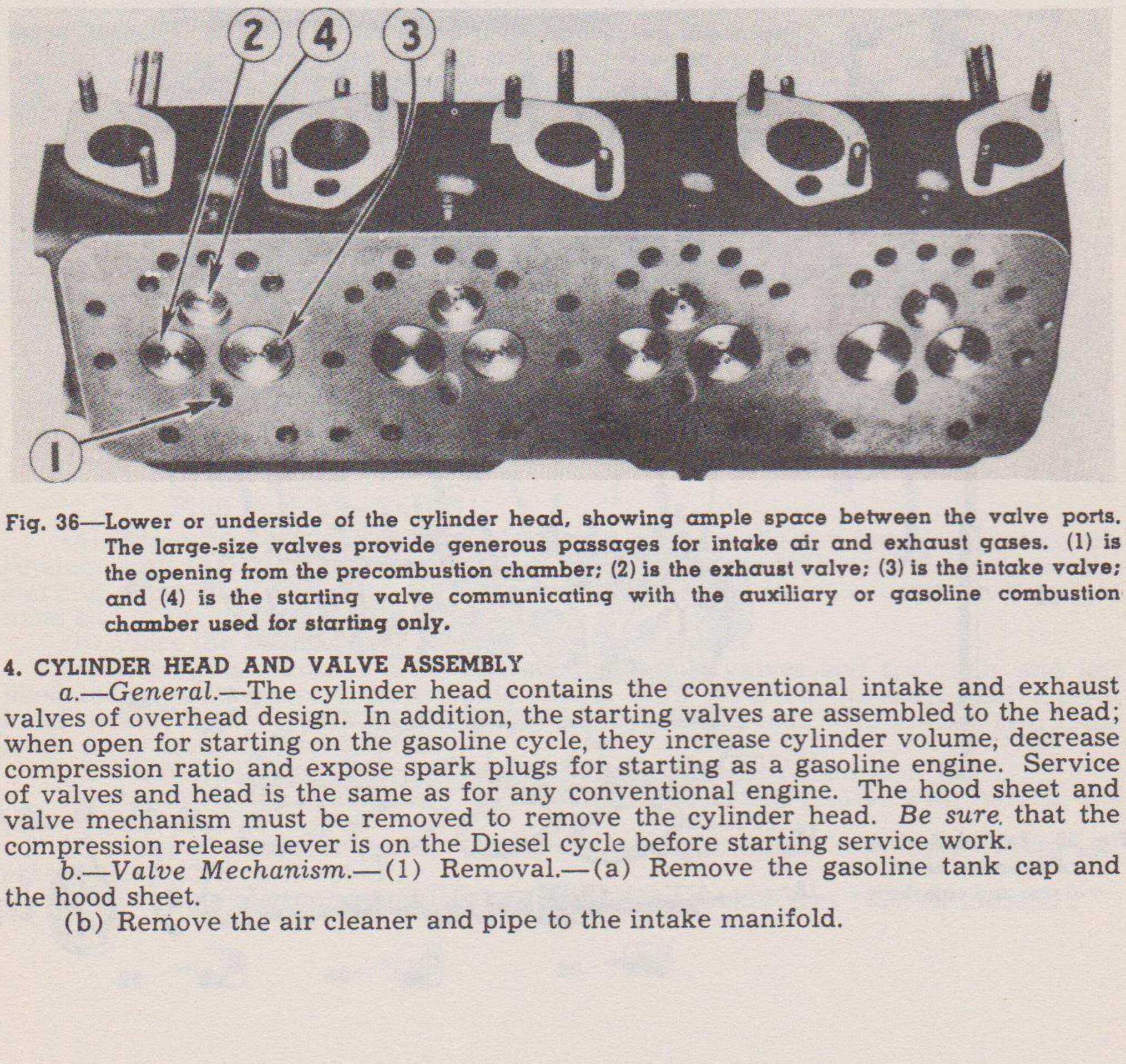

Fig. 36—Lower or underside of the cylinder head, showing ample space between the valve ports. The large-size valves provide generous passages for intake air and exhaust gases. (1) is the opening from the precombustion chamber; (2) is the exhaust valve; (3) is the intake valve; and (4) is the starting valve communicating with the auxiliary or gasoline combustion chamber used for starting only.

4. CYLINDER HEAD AND VALVE ASSEMBLY

a.—General.—The cylinder head contains the conventional intake and exhaust valves of overhead design. In addition, the starting valves are assembled to the head; when open for starting on the gasoline cycle, they increase cylinder volume, decrease compression ratio and expose spark plugs for starting as a gasoline engine. Service of valves and head is the same as for any conventional engine. The hood sheet and valve mechanism must be removed to remove the cylinder head. *Be sure* that the compression release lever is on the Diesel cycle before starting service work.

b.—Valve Mechanism.—(1) Removal.—(a) Remove the gasoline tank cap and the hood sheet.

(b) Remove the air cleaner and pipe to the intake manifold.

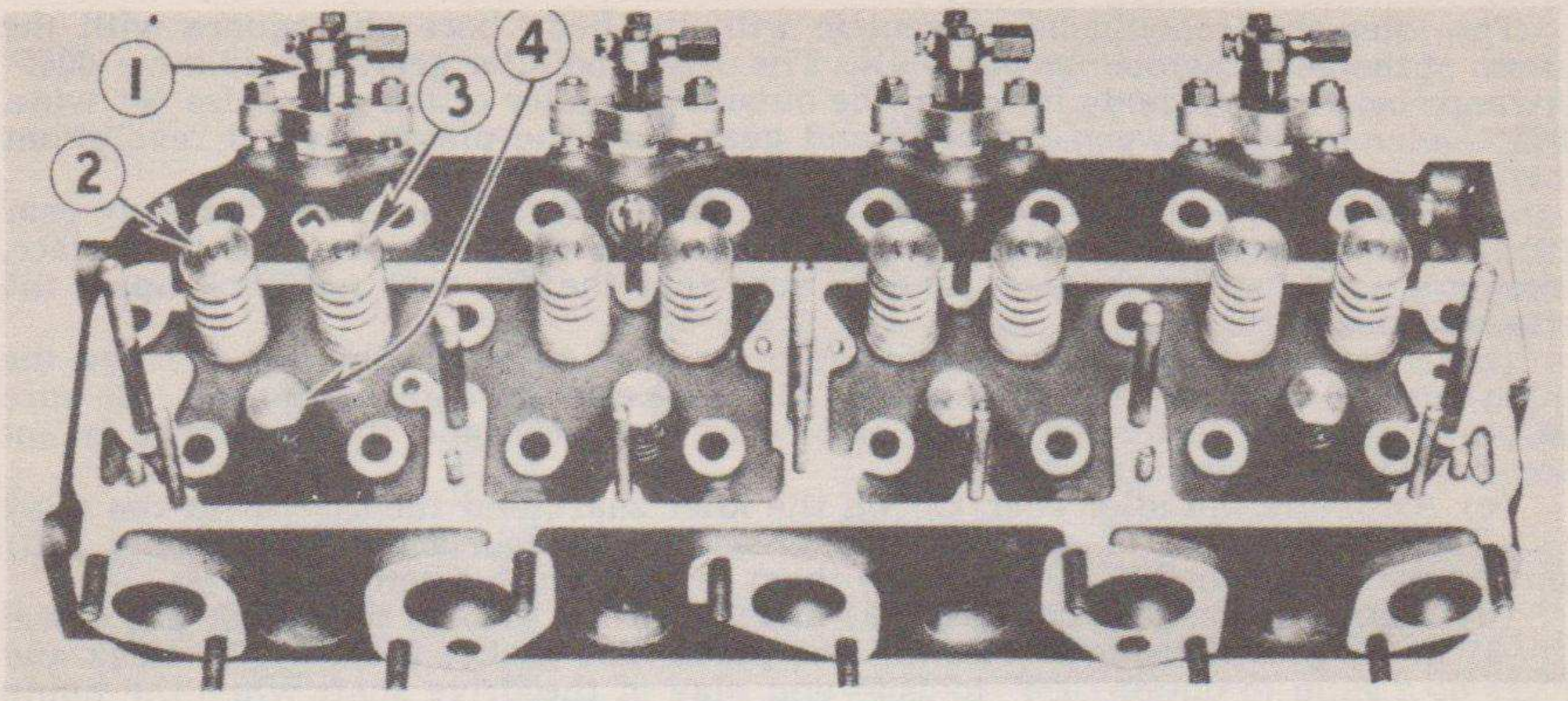

Fig. 37—Top of the cylinder head showing valve-in-head construction. The head is securely bolted to the crankcase. Large water passages assure proper operating temperatures around the valves, injection nozzles, and precombustion chambers. Valve seats are gusher-cooled for longer life. Injection nozzles are shown at (1). (2) is the exhaust valve; (3) is the intake valve; and (4) is the starting valve communicating with the gasoline combustion chamber used for starting only.

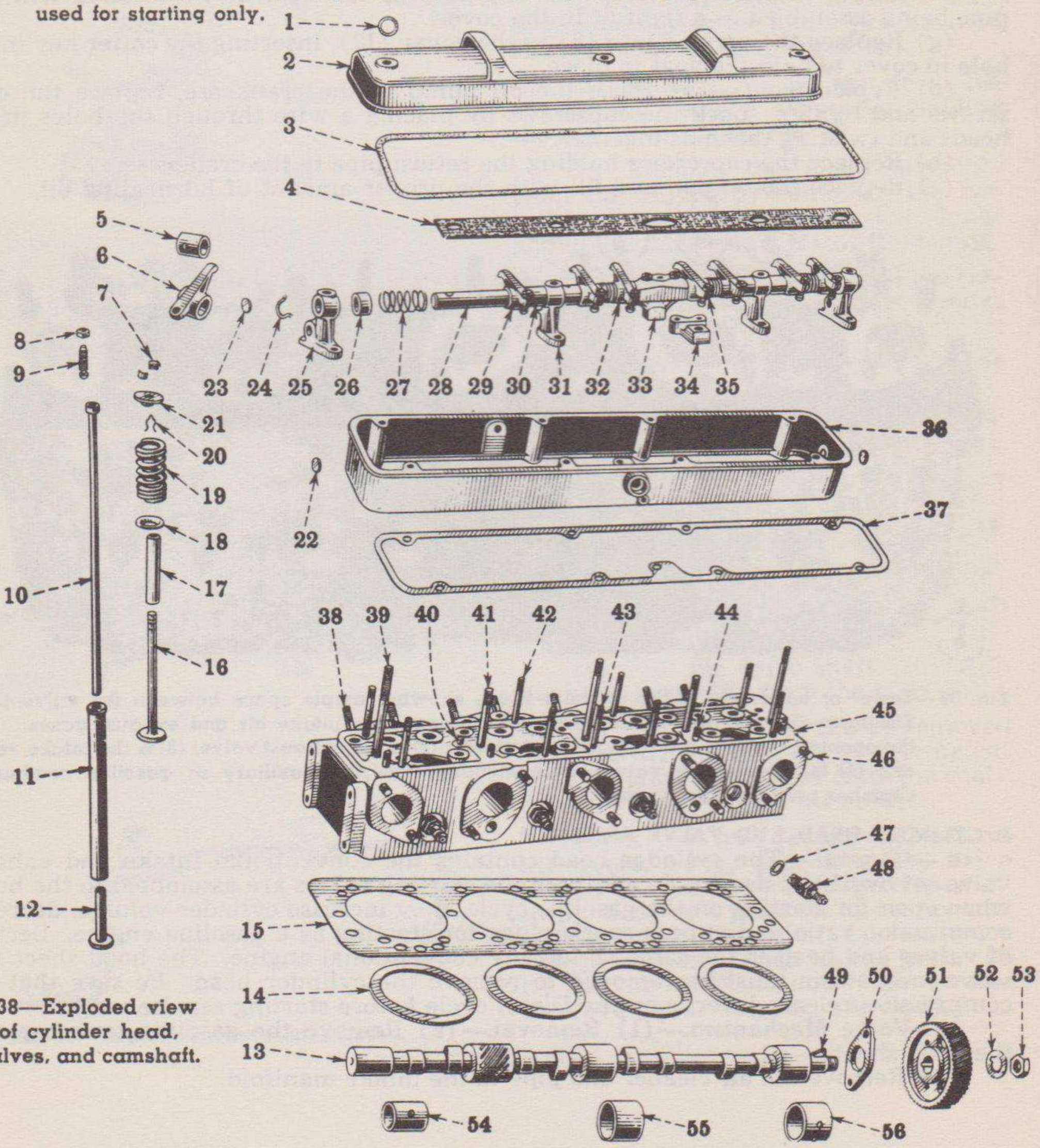

Fig. 38—Exploded view of cylinder head, valves, and camshaft.

(c) Remove three nuts with copper gaskets (1), Fig. 38, from valve housing cover (2) and lift it off with gasket (3).

(d) Lift off felt wick (4).

(e) Disconnect the starting-valve operating shaft lever on the outside of the valve housing (36).

(f) Loosen all the adjusting screws (9) on the valve levers.

(g) Remove nuts around the outside of the valve housing and the cap-screws and nuts on the valve lever brackets (25), (31), and (34).

(h) Lift off the valve mechanism and the valve housing (36) as a unit.

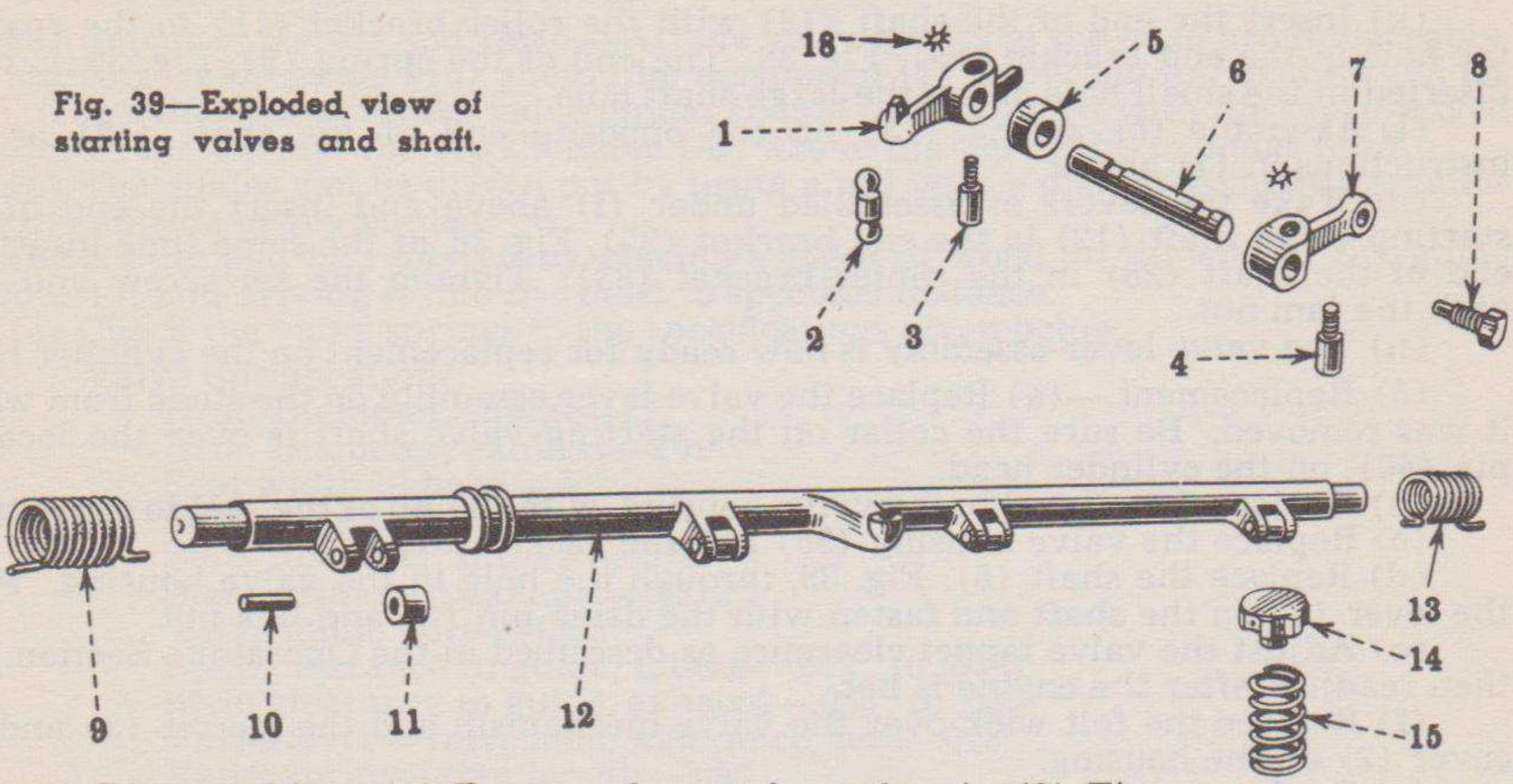

Fig. 39—Exploded view of starting valves and shaft.

(2) Disassembly.—(a) Remove the nut from the pin (3) Fig. 39, and drive out the pin.

(b) Remove the lever (1) by pulling on the lever (7). The valve housing can now be removed from the valve assembly.

(c) Loosen the jam nuts and set screws on the center bracket (33), Fig. 38. The shafts (28) with levers, springs, and spacers are now slipped out of the bracket (33).

(d) The levers, springs, spacers, and starting-valve shaft are now removed from the shafts for repair.

(3) Repair.—Bushings in the valve levers can be replaced; they should be reamed to sizes as listed below. In replacing bush ings be sure holes in the lever line up with holes in the bushing. The valve lever shaft (28) can be checked for wear with specifications given below.

Valve lever shaft, diameter—.9660" to .9665".
Valve lever clearance in bushing—.0005" to .002".
Valve lever spacer, intermediate (30) length—$1\frac{5}{32}$".
Valve lever spacer end (26) length—$\frac{23}{32}$".
Valve lever service tools.
Reamer Body—SE-945
Cutter Blades—SE-8735
Pilot Bushing—SE-8771

(4) Reassembly.—(a) To assemble rocker arms on the left hand side, place the retainer ring (24) on shaft (28) and slip on end bracket (25) with the hole for the starting valve shaft (12), Fig. 39, away from you and be sure the notch on the right hand end of the shaft (28), Fig. 38, is on top.

(b) Place the outer spacer (short) (26) on the shaft.

(c) The straight rocker arms operate the intake valves and the right and left hand rocker arms operate the exhaust valves. Now place on the shaft (28) a right hand rocker arm (6) with the adjusting screw toward you. This rocker arm must angle away from the bracket (25).

(d) Place the spring (27) on the shaft, then a straight rocker arm (29).

(e) Assemble the spacer (30) and intermediate bracket (31), with hole in the base toward you.

(f) Assemble another spacer (30) and a straight rocker arm (29). Place another spring (27) on the shaft.

(g) To complete the assembly place a left hand rocker arm (32) on the shaft.

(h) Place the shaft in the upper half of the center bracket (33) with the flat side of the bracket facing the injection pump side of the engine. Tighten the set screw and lock the jam nut.

(i) Assemble on the right hand side—follow instructions in paragraphs above, with the exception that the rocker arm next to the end bracket (25) is a left-hand rocker arm and the rocker arm next to the center bracket (33) is a right-hand rocker arm.

(j) Place the spring (9), Fig. 39, on the shaft (12) so that the short end hooks under the bracket carrying the roller (11). The end of the spring must be on the under side of the bracket.

(k) Insert the end of the shaft (12) with the roller bracket (11) to the rear, in the hole in the end bracket (25), Fig. 38. The end of the spring (9), Fig. 39, is to be inserted in the small hole above the large shaft hole.

(l) Assemble the spring (13) on the opposite end of the shaft (12) as per instructions in (j) above.

(m) Take the levers as assembled under (i) above and insert the end of the starting valve shaft (12) in the end bracket (25), Fig. 38, at the same time insert the end of the shaft (28) in the center bracket (33). Tighten the set screw and lock with the jam nut.

(n) The valve lever assembly is now ready for replacement on the cylinder head.

(5) Replacement.—(a) Replace the valve lever assembly on the studs from which it was removed. Be sure the collar on the starting-valve shaft is over the locating pin (40), on the cylinder head.

(b) Replace the oil seal in the valve housing, with the lip of the seal to the outside.

(c) Replace the valve housing (36) and the gasket (37).

(d) Replace the shaft (6), Fig. 39, through the hole in the valve housing. Place the lever (1) on the shaft and fasten with the drive pin (3) and hex nut.

(e) Adjust the valve tappet clearance as described in the Operator's Section, and then readjust after the engine is hot.

(f) Replace the felt wick over the valve mechanism and the gasket (3) and the cover (2) on the housing.

(g) Replace the hood sheet, air intake pipe, and the gas tank cap.

(h) Connect the lever (7), Fig. 39, to the starting mechanism.

c.—*Cylinder Head.*—The cylinder head is removed when valves and valve seats need reconditioning, when the gasket is leaking, or when the pistons, connecting rods, or cylinder sleeves are to be taken out. When ever the head is off for valve reconditioning, inspect the sleeves for wear.

(1) Removal.—(a) Remove the hood sheet, air cleaner, and pipe to the intake manifold, the valve-lever housing and valve rocker arms as described under the Valve Mechanism just preceding.

(b) Drain the radiator.

(c) Disconnect the water outlet elbow from the front of the cylinder head.

(d) Disconnect the injection pipes at the pump and nozzles. Place caps on the pump to protect it from dirt. Disconnect the clip on the Number 4 injection pipe from the head. It is not necessary to remove the injection nozzles unless a new cylinder head is being installed.

(e) Shut off the valve on the gasoline tank and disconnect the fuel line at the carburetor.

(f) Disconnect the primer rod at the control rod end; also the cable to the choke control.

(g) Disconnect the wires and remove the spark plugs. This is a precaution to prevent damage to the plugs while servicing the cylinder head.

(h) Disconnect the link between the starting control mechanism and the carburetor.

(i) Remove the end cover (29) Fig. 51, and disconnect the short-circuiting cable (20) and remove it with the grommet (22).

(j) Remove the six nuts holding the exhaust manifold (6) to the cylinder head, and lift off the manifold.

(k) Remove the four nuts holding the intake manifold (19) and lift off this manifold.

(l) Remove gaskets (7), (5), (30), (8) and (31).

(m) Remove the push rods (10), Fig. 38.

(n) Remove all nuts holding the cylinder head and take off the head.

(o) Remove the cylinder head gasket and gasket rings.

(2) Disassembly.—(a) Place the cylinder head on a bench with a small block to support the valves when the springs are depressed. Be sure to keep the valves in order and replace them in their original positions.

(b) To remove the valves, depress the upper seat (21) and remove the keys (7). Lift off the upper seat and the spring and remove the retainer (20) and lower seat (18). Tip the head on its side and withdraw valve.

Repeat the above operation for each intake and exhaust valve.

(c) To remove the starting valves (17), Fig. 39, remove the cotter key from the retainer (14) and unscrew it. The valve can then be removed from the head. Be sure to keep the valves in proper order.

(3) Repair of Valves and Head.—All the valve guides in the head are replaceable. The starting-valve guide (16) should be assembled $\frac{15}{16}$" below the top of the cylinder head. The exhaust and intake valve guides should be assembled with the sharp-edged chamfer at the top and the top shoulder 1⅜" above the top of the cylinder head.

(a) The guides can be driven out by using a rod with a diameter slightly smaller than the outside of the guide.

(b) Guides can be replaced by placing a piece of wood on the end of the guide to protect it and driving it into the head to specified distance.

(c) Check the valve springs to the specifications given below.

Valve Specifications:

Head Diameter, intake—2"
Head Diameter, exhaust—1¾"
Seat width in head—$\frac{3}{32}$"
Seat angle—45°
Stem diameter, intake—.4325"
Stem diameter, exhaust—.4315"
Valve guide bore—.4355"
Stem clearance in guide, intake—.002" to .004"
Stem clearance in guide, exhaust—.003" to .005"
Valve lever—valve stem clearance, hot—.018"
Valve spring—free length—3$\frac{3}{16}$"
Tests 65 lbs. when compressed—2½"

Valve Service Tools:

SE- 640—Valve Guide Reamer
SE-1235—45° intake valve seat reamer
SE-1236—45° exhaust valve seat reamer
SE-903—Valve seat pilot

When it is necessary to replace an intake or exhaust valve, first ream the valve seat with the proper reamer and then lap in the new valve. The valve seat should be $\frac{3}{32}$" wide. Remove all grinding compound from the guide, valve, and seat and then oil the valve stem well.

(4) Reassembly.—(a) Clean all the carbon off the top of the pistons and cylinder head. Remove all foreign material off the mating surfaces of the engine block and cylinder head. Do not let any carbon or dirt fall into the engine through the push-rod openings or in the cylinders.

(b) Insert the valves in the cylinder head in proper order and support them with a block of wood. As each valve is inserted, place the lower seat (18), Fig. 38, with the outside edge of the seat on the cylinder head and replace the retainer (20).

(c) Replace the spring (19). Place the upper seat (21) on the stem and depress until the keys (7) can be inserted in the end of the stem, tapered ends down.

(d) Replace the starting valve (17), Fig. 39, in the head in proper order; place the springs (15) on the stems and screw the retainers (14) down until they are .240" to .250" above the cylinder head. Then replace the cotter keys.

(e) Place the gasket rings (14), Fig. 38, on the cylinder block with flange side facing up. Note: In the event new gasket rings are not available when reassembling the engine, the old rings should be annealed. These gasket rigs, being made of copper, becomes hardened in use. Annealing restores flexibility, which facilitates maintaining a gas-tight seal. To anneal the gasket rings, heat to a dull red heat and quench in water.

(f) Grease both sides of gasket (15) and carefully place it on the studs with side marked "top" facing up. Be sure no foreign material is adhering to the gasket, crankcase, or cylinder head.

(g) Place the cylinder head on the engine and run down nuts with a speed wrench.

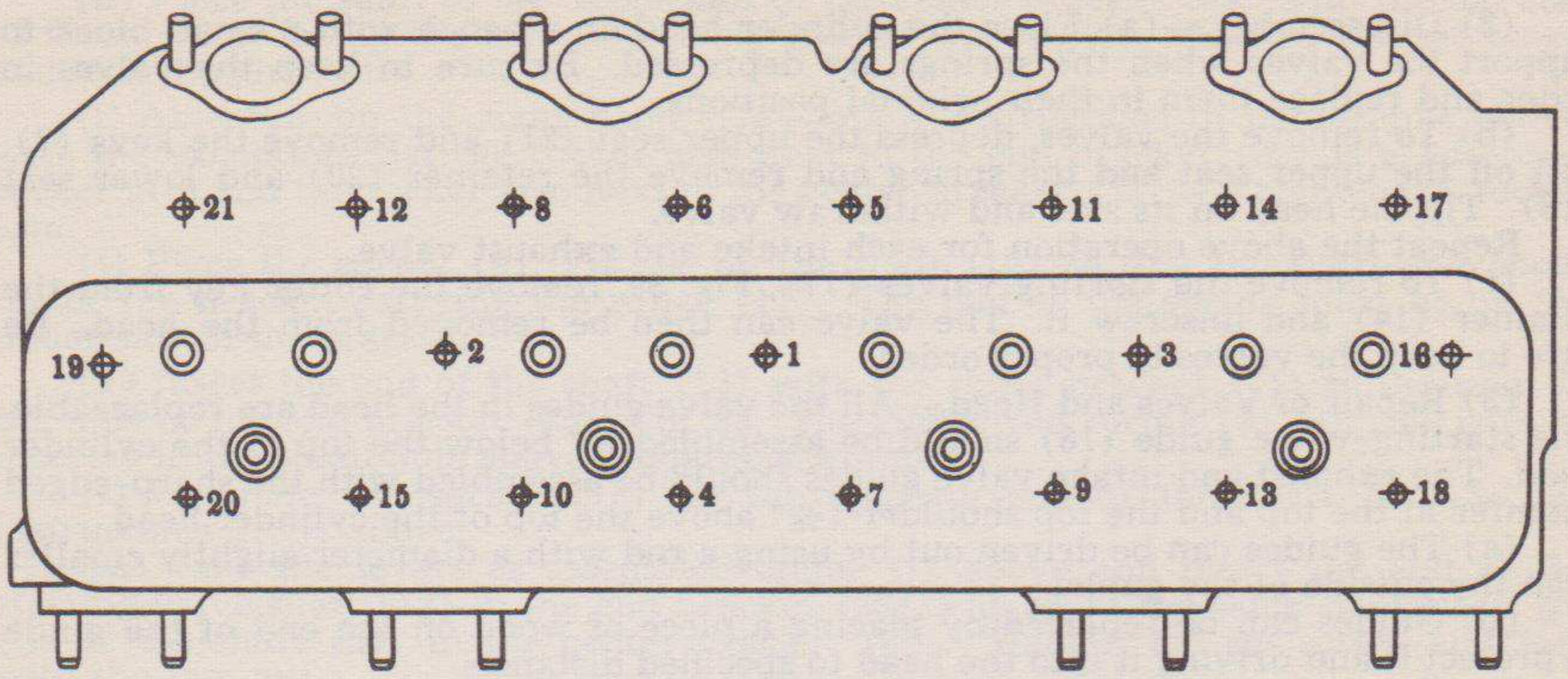

Fig. 39A—Cylinder head nut tightening sequence.

(h) Following the sequence given on the chart, Fig. 39-A, start with Number 1, drawing each nut down with a little tension. Repeat the operation several times, drawing the nuts down a small amount each time. Check with a torque-tension wrench to see how much the nuts have been tightened. The nuts are to be tightened to 170 ft. lbs.—repeat the operation with the torque-tension wrench. After nuts have been drawn to the final tension go back over the nuts, following sequence diagram, to make sure that those already tightened are not now below 170 ft. lb. torque because the entire head has been pulled down.

(i) Replace the push rods (10) in the head.

(j) Replace the lower half of the center bracket (34) with the capscrew holes toward the valve side of the head.

(k) Replace the valve-lever assembly as described under the Valve Mechanism.

(l) Replace manifolds, ground wire for starting system, carburetor connections, cooling water connections, injection pump tubing, etc., in the reverse order of removal. Bleed air from the fuel injection system as described in the Operator's Section.

(m) Adjust clearance between retainer (14), Fig. 39, and cam roller (11) as described under the starting system in this maintenance part.

(n) Adjust clearance between intake and exhaust valves and levers as described in the Operator's Section.

(o) Replace the valve housing but leave off the valve-housing cover for readjustment of valve clearances after engine has been warmed up.

(p) Refill the cooling system, start the engine and bring it up to operating temperature. Readjust the intake and exhaust valves to .018". Replace valve housing cover and hood.

(q) Replace air cleaner and air pipe.

5. CAMSHAFT

Camshaft Specifications—

Bearing Front—2.618" to 2.619"
Bearing Center—2.368" to 2.369"
Bearing Rear—1.7475" to 1.7485"

Clearance—.0015" to .0035"

The slot in the front bearing allows a small amount of oil to flow from header in the crankcase to the valve lever mechanism with each revolution of the camshaft.

a.—Removal.—(1) In the removal of the camshaft from the cylinder block, it is assumed that the power unit has been removed from the motor grader, and the hood, radiator and foot-type base have been removed. The fuel injection pipes should be removed to prevent damage when the crankcase is laid on the pump side for camshaft service.

(2) Remove the valve-lever assembly and push rods as described under the valve Mechanism.

(3) Remove the oil pan, the crankcase front cover, and the oil pump as described under those subjects.

(4) Remove the idler gear (49), Fig. 43, by bending back the corners of bolt lock (51) and removing the two cap screws, through thrust washer (50).

(5) Turn the crankshaft gear (51), Fig. 38, until the hole in the gear lines up with the head of the cap screw holding the thrust plate (50) and remove the cap screw. Repeat the operation to remove the second cap screw.

(6) Reach up from the bottom of the crankcase and push the tappets (12) toward the top of the crankcase as far as they will go.

(7) The camshaft can now be removed from the block by pulling on the gear (51).

(8) Bend washer (52) down and remove nut (53). Using a gear puller, remove gear (51) from the camshaft (13). Take off thrust collar (50) and key (49).

b.—Repair.—Inspect the camshaft bearing surfaces and check to the dimensions given in the specifications. The groove in the front bearing meters oil to the rocker-arm assembly.

(1) In order to facilitate the replacement of the camshaft bearings, remove the flywheel and the flywheel housing, and drive out plug (21), Fig. 43, by using a long bar placed against the plug from the front end of the crankcase and tapping with a hammer.

(2) Drive out the bushings (54), (55), and (56), Fig. 38, by using a brass rod placed against the edge of the bushing, and tapping. Move the end of the bar around the edge of the bushing as tapping proceeds to prevent the bearing from jamming in the boss.

(3) Replacement bushings are furnished reamed to size. In replacing the bushings, be sure all the holes in the bushings line up with the holes in the crankcase.

(4) Bushing (56) is pressed flush with the end of the crankcase by placing a block of wood across it and tapping with a hammer. Be sure the bearing is started square with the crankcase so that it does not bind.

(5) Repeat above procedure for bearing (55), pressing it flush with the end of the casting.

(6) Repeat the operation in paragraph (4) and drive the bushing (54) so that the inner end of the bushing is ⅛" from the inside end of the boss inside the crankcase.

c.—Replacement.—(1) Place the thrust plate (50) with the countersunk surfaces toward the threaded end of the shaft, on the shaft (13). Insert the key (49) in the shaft and press on the gear (51). Be sure the lettered side of the gear is outside.

(2) Replace the washer (52), tighten the nut (53), and bend down the edge of the washer to lock the nut.

(3) Place the shaft in the crankcase and tighten the cap screws on the thrust plate (50). Be sure the face of gear (51) runs true with the front plate on the engine. If this is not done the timing gears will be noisy. Clearance between the thrust plate (50) and the gear (51), when all are assembled, should be .005" to .011".

(4) Replace the idler gear (49), Fig. 43. The gears are punch marked "C", "P", and "S". Be sure all marks correspond when the idler gear (49) is slipped on the shaft (48). Replace the thrust washer (50), bolt lock (51), and tighten the cap screws. Lock the cap screws by bending down the corners of the bolt lock.

(5) Replace the crankcase front cover as described under that subject, and the oil pan.

(6) Replace plug (21) with a new one. Place a good sealer on the edge of the plug and put the plug in the crankcase. Using a bar slightly smaller than the plug, set the plug by striking the bar with hammer.

6. CONNECTING ROD, PISTON ASSEMBLIES, AND CYLINDER SLEEVES

a.—General

Material.....A-132, Aluminum Alloy

Fit in sleeve.....Piston and sleeve are selected to give .0085" to .0095" normal measured clearance. A ½-in. wide, .006" ribbon may be used as a "GO" gauge with a light pull of 2 to 4 lbs. An .008" ribbon may be used as a "NO GO" gauge with a tight pull of 11 to 14 lbs.

Rings.....6 required, 4 compression rings and 2 oil control. One oil control ring is above piston pins; the other is below. Fourth compression ring from top of piston is tapered and should be assembled with the word "top" toward the top of the piston.

Ring Width:

Compression .....1235"

Oil Control.....2488"

Ring Gap.....010" to .020"

Clearance in Groove:
Top Compression.....0045"
2nd Compression.....0035"
3rd and 4th.....003"
Oil Control.....003"

Piston Pin:
Length.....4.105"
Diameter.....1.6250" to 1.6253"
Clearance in rod bushing.....0003" to .0005"
Clearance in piston.....0001" to .0003"

The piston assemblies and cylinder sleeves are readily replaceable. The piston assemblies can be removed for service without disturbing the cylinder head. The cylinder sleeves are the wet type. The connecting rod bearings are the precision type which make possible the quick and easy installation of new bearings as no scraping or fitting is necessary. Piston pins are the full-floating type, held in place by snap rings.

b. Replacement of Connecting Rod Bearings Without Removing Rods from Block.

(1) Removal—NOTE: The engine must be removed from the grader (See Engine Removal in this section), before taking off the oil pan.

(a) Remove the oil pan from the crankcase.

(b) Remove the spark plugs and set the engine on the gasoline cycle.

(c) Turn the engine over with the starting crank until the connecting-rod bearing to be removed is pointing straight down.

(d) Remove the cotter keys and nuts from the connecting-rod bolts (24).

(e) Tapping lightly on the bearing cap loosens it. The bolts are the fitted type. Do not angle the cap or it will be difficult to remove.

(f) Lift the rod (21), Fig. 40, up and push it to one side and remove the bearing (38). Remove the bearing from the cap. The bearings are not adjustable. When wear becomes excessive, replacement is necessary. Wear of the bearing can be checked by placing a .003" brass shim (¼" wide x 1¼" long) between the lower bearing and the crankshaft. The drag on the crankshaft indicates the amount of clearance.

(2) Replacement.—(a) When replacing the bearings, be sure to clean them. Lubricate them and slide them into place so that the nib on the bearings engages the grooves in the rods.

(b) Place the cap on the rod, making sure the numbers stamped on the cap and the rod match.

(c) Tighten the nuts evenly and check with a torque-tension wrench to 70 ft. lbs. Be sure to replace and spread the cotter keys. Line up the cotter key holes in the bolts by tightening the nuts.

(d) Replace the oil pan. Refill the engine with the proper amount of lubricating oil after the engine is replaced in the grader.

(e) Replace the spark plugs.

c.—Connecting Rods and Pistons.

Connecting Rod Data:
Crankpin diameter—3.2480" to 3.2485"
Bearings—Precision, copper-lead, steel-back
Total length—2.057" to 2.067"
Running clearance—.003" to .004"
Side clearance—.005" to .012"

(1) Removal.—(a) Follow the instructions for removing the cylinder head and connecting-rod bearings.

(b) The piston and rod assembly can be removed by turning the crankshaft to the side so the piston will clear as it is pulled out of the engine.

Piston assemblies must be handled with care to avoid damaging and knocking out of round or out of alignment. In withdrawing the piston and rod from the engine, do not let the skirt of the piston strike the crankcase or connecting rod.

NOTE: Be sure to mark pistons so they are replaced in the cylinders from which they are removed. Also mark them so they can be replaced in the same position in the cylinder sleeve.

(2) Disassembly.—(a) The piston has 4 compression and 2 oil control rings. It is recommended that a ring tool be used to remove and replace the piston rings. Remove

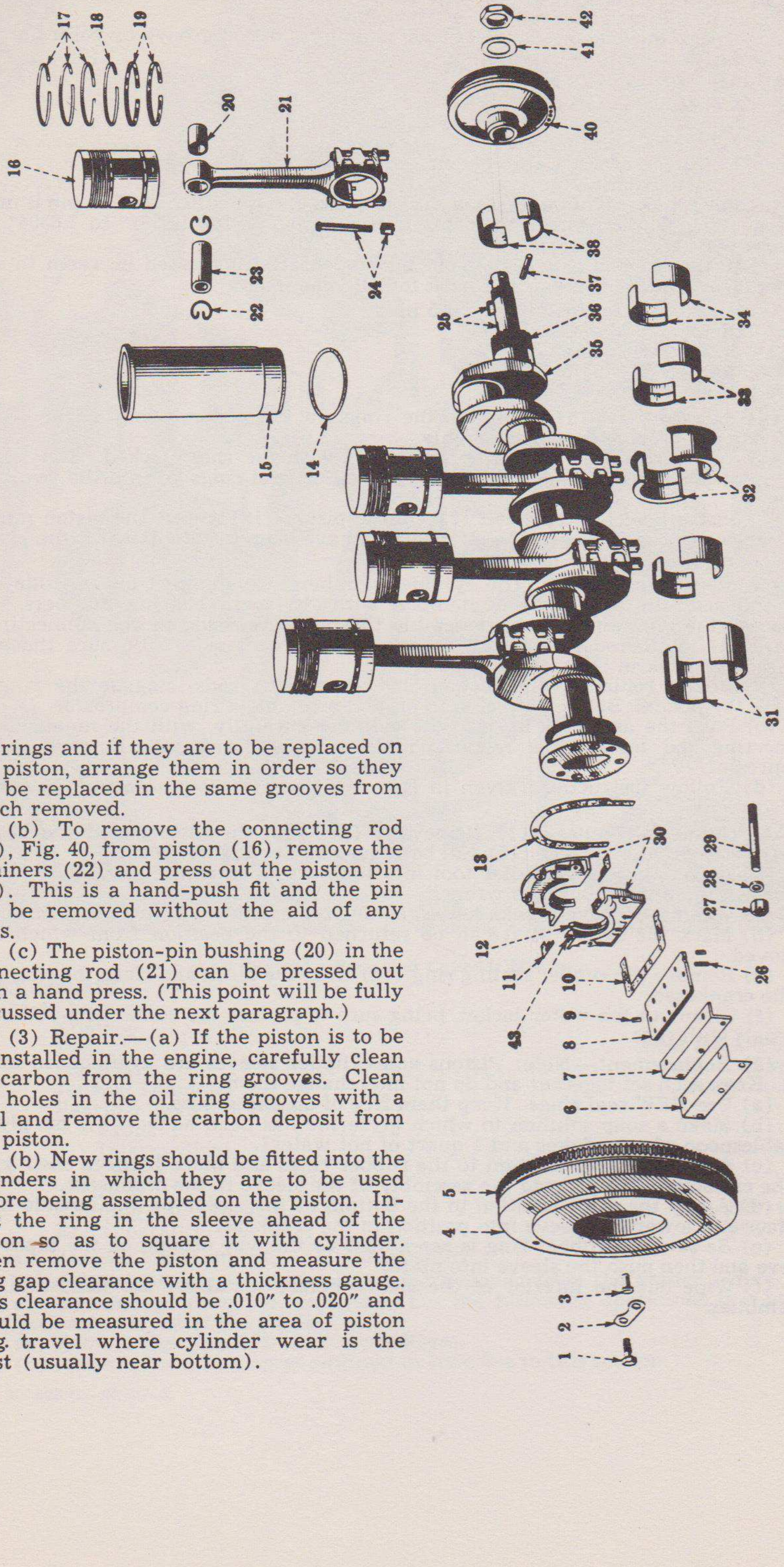

Fig. 40—Exploded view of crankshaft, pistons, piston rings, connecting rods, and bearings.

the rings and if they are to be replaced on the piston, arrange them in order so they can be replaced in the same grooves from which removed.

(b) To remove the connecting rod (21), Fig. 40, from piston (16), remove the retainers (22) and press out the piston pin (23). This is a hand-push fit and the pin can be removed without the aid of any tools.

(c) The piston-pin bushing (20) in the connecting rod (21) can be pressed out with a hand press. (This point will be fully discussed under the next paragraph.)

(3) Repair.—(a) If the piston is to be re-installed in the engine, carefully clean all carbon from the ring grooves. Clean the holes in the oil ring grooves with a drill and remove the carbon deposit from the piston.

(b) New rings should be fitted into the cylinders in which they are to be used before being assembled on the piston. Insert the ring in the sleeve ahead of the piston so as to square it with cylinder. Then remove the piston and measure the ring gap clearance with a thickness gauge. This clearance should be .010" to .020" and should be measured in the area of piston ring. travel where cylinder wear is the least (usually near bottom).

(c) Break the outside upper edge of the top piston ring with a file to prevent digging in of this ring in *a slightly worn sleeve.*

(d) Check the side clearance of each ring in its piston groove by rolling the ring around the groove before assembling.

The side clearances are:

Clearance in Groove:

Top Compression.....0045"
2nd Compression.....0035"
3rd and 4th Compression.....003"
Oil Control.....003"

(e) For replacement purposes, a .005" oversize pin is available. This pin is marked with a (+5). The bushing and piston must be reamed for 1.6301" to 1.6304". Tool requirements are listed below.

(f) In the event a new piston-pin bushing has been pressed in, ream to secure proper clearances, if necessary. Check for alignment.

Tools required for installing a +5 pin:

Reamer Body—SE-949
Blades—SE-945-5
Pilot—SE-949-15
Hone Blades—SE-949-10

(4) Reassembly.—(a) Assemble the rings on the piston, using a ring tool and reversing the procedure of disassembly.

(b) The fourth ring should be assembled with the side marked "TOP" toward the top of piston. This ring is tapered. The oil control rings go into the two bottom grooves.

(c) Place the connecting rod (21) in the piston (16), insert the piston pin (23), and replace the snap rings (22). If new pins have been installed, warm the piston in hot water *only* and push in place.

(5) Replacement.—(a) The cylinder numbers are stamped on one side of the cap and rod; the crankcase is stamped with the main bearing numbers. When replacing the rods and pistons, assemble the numbered side of the connecting rod toward the numbered side of the crankcase (camshaft side). Be sure the pistons and rods go back in their original position.

(b) Before replacing the pistons and connecting rods, stagger the ring gaps around the piston. Bathe the piston in oil and assemble a ring compressor.

(c) Push the assembly up into the cylinder carefully, with the number on the connecting rod toward the numbered side of the crankcase. Remove the ring compressor.

(d) Follow instructions given in Item b(2) above "Replacement" to complete replacement.

d.—Cylinder Sleeves.—(1) Removal.—(a) With the pistons and the head removed, the cylinder sleeves (15) can be removed. See Figure 40A.

(b) Lower the sleeve puller tool into the bore. Center the shoe at the bottom, run down the nut and apply a wrench.

(c) When the sleeve breaks loose, remove the assembly from the block.

(d) Mark the sleeve so it can be returned to the position from which it was removed.

(e) Remove the rubber sealing ring (14) from the block and clean the ring groove in the crankcase.

(f) Clean out the water jacket, being sure to protect the connecting-rod bearing journals with rags.

(2) Replacement.—Note: Pistons and cylinder sleeves are available in matched sets. Keep each set together and do not interchange them.

(a) Use *NEW* seal rings. Keep them free of oil and grease.

(b) Make a soap solution to which glycerine has been added—(½ oz. glycerine to tablespoon of soap flakes and 1 quart of hot water).

(c) Apply the soap solution to the rubber rings and place them in their grooves in the crankcase just prior to the assembly of the sleeve in the crankcase.

(d) Apply the same solution to the bottom of the sleeve on the outside finished surface and lower the sleeve into position in the crankcase.

(e) *Be sure* the rubber ring is assembled all the way around on the taper of the sleeve and then push the sleeve into place.

(f) Wipe out the interior of the sleeve before installing the head and piston assemblies.

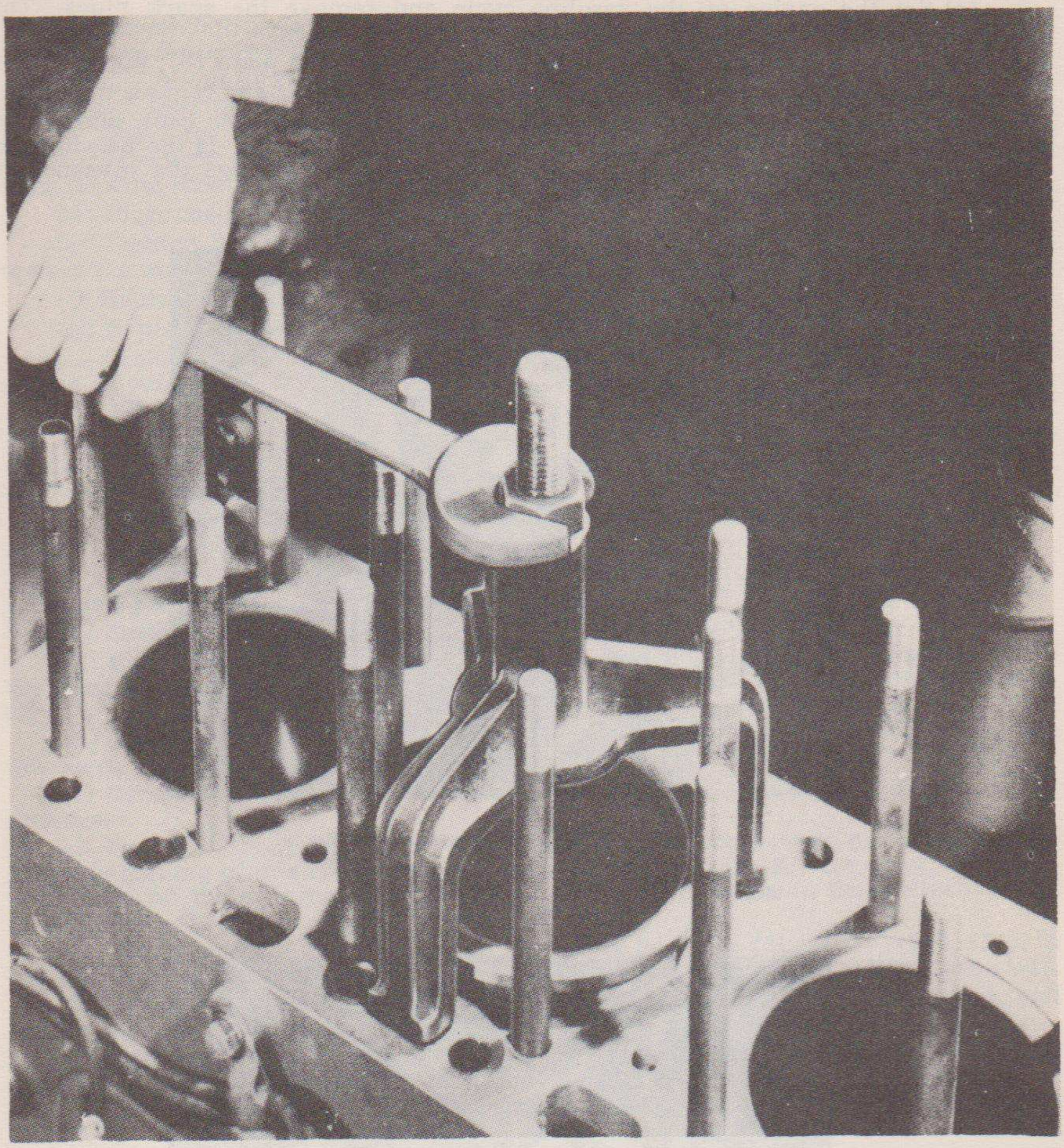

Fig. 40A—Removing Cylinder Sleeve.

7. CRANKSHAFT

Main bearings

Number	5
Type	Steel Back-Precision
Material	Copper-lead
Journal Diameter	3.248" to 3.2485"
Bearings Length (Total):	
Front	1⅞"
Intermediate	1¾"
Center	2.368"
Rear	2 11/16"
Running Clearance	.003" to .004"
End Clearance	.008" to .012"

a.—Bearing Replacement.—(1) Disassembly.

Note: It is necessary that the engine be removed from the grader before the oil pan can be removed from the crankcase. For the following operations it is assumed that the engine is out of the grader.

(a) Remove the oil pan from the crankcase.

(b) Remove the oil pump as outlined in Item 3-*e* in this section.

990620 O—52——8

(c) Set the engine on the gasoline cycle and remove the spark plugs. This facilitates turning the engine over when removing the bearings.

(d) Remove the dust shield (7), the gasket (6), and the plate (8), Fig. 40.

(e) Remove all the cotter keys in the main-bearing studs and remove the nuts.

(f) Tap the bearing caps lightly to loosen them. Remove the caps, taking care to pull them straight off; otherwise they will bind on the studs. If the bearings are not being replaced with new ones, be careful not to interchange the intermediate bearings (33). Remove the bearings from the caps.

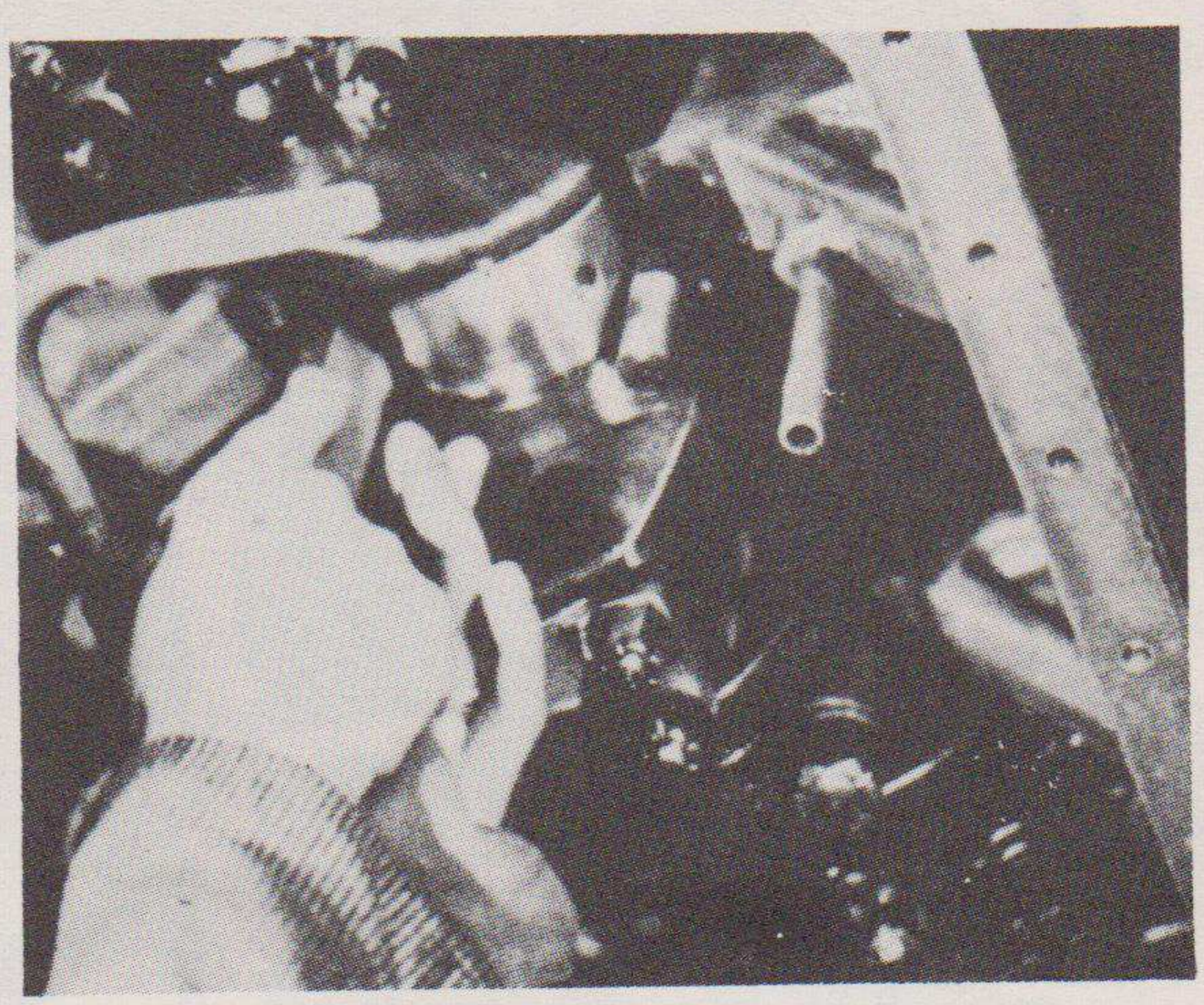

Fig. 41—Sliding out on upper bearing.

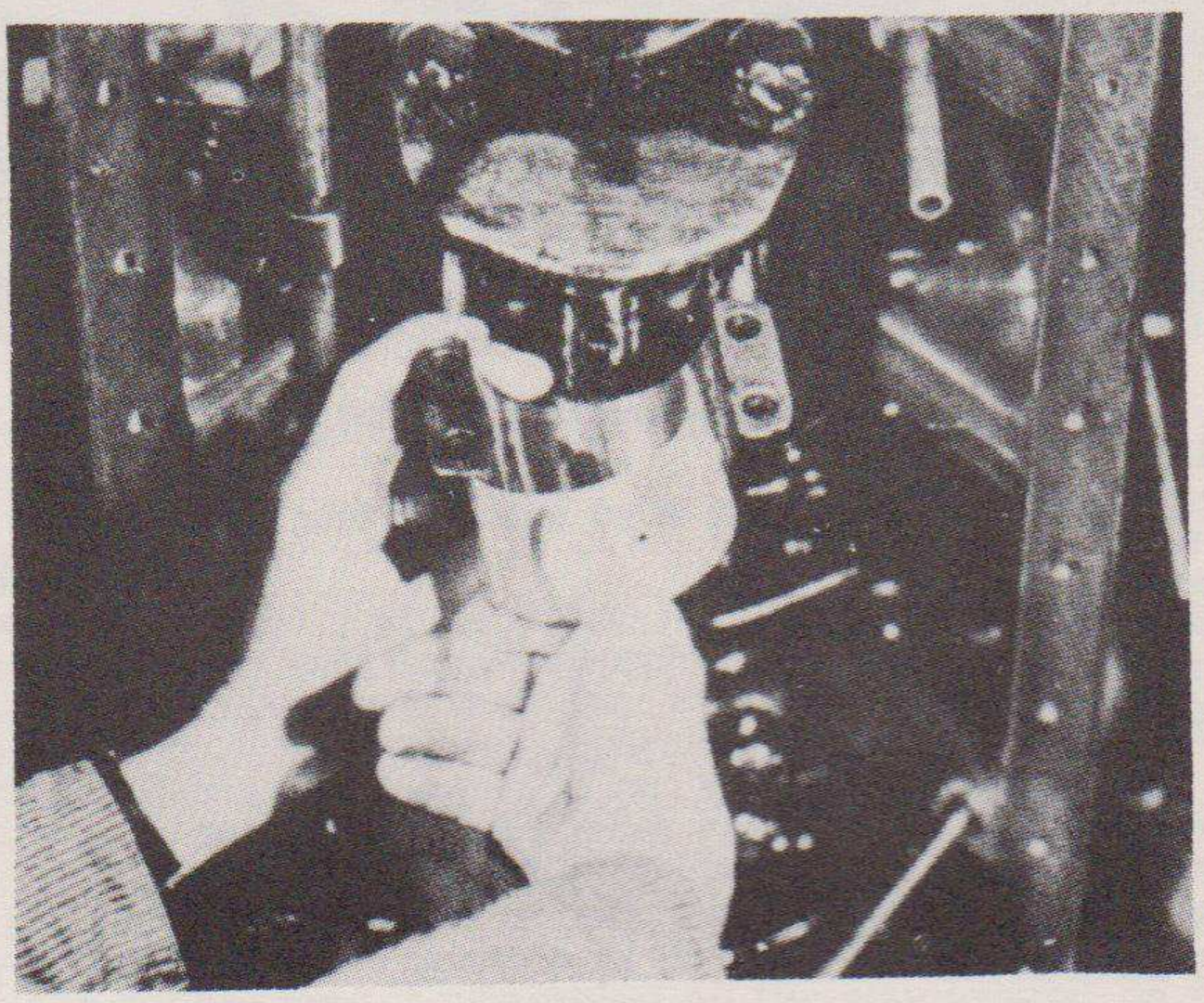

Fig. 42—Connecting rod bearing cap removed.

(g) The upper bearings can be slipped out of place by pushing on the end without the nib, using a thin piece of flexible metal while turning the crankshaft in the direction of removal.

(2) Reassembly.—(a) All the main bearings are the precision type and require no fitting when being replaced.

(b) Clean and lubricate all the bearings and the caps. To replace the upper half of the main bearing, reverse the procedure outlined in the preceding paragraph.

(c) Place the bearings in the caps from which they were removed. Place the bearing caps with the number on the cap toward the number on the crankcase. The main bearing numbers are stamped on the surface to which the oil pan is attached.

(d) Place the lock washers and nuts on the bearing studs and run them up evenly.

(e) Tighten the bearing (32) first. Then proceed from front to rear, working toward the ends. Draw all nuts to 150 ft. lbs. torque. Replace cotter keys.

(f) Replace the oil pump (see section "Oil Pump").

(g) Replace the plate (8) and the gasket (6) and the dust seal (7).

b.—Crankshaft Removal.—(a) The engine assembly is removed from the motor grader as outlined in this section.

(b) Take off the flywheel (4) by removing the cap screws (1) and the locks (2), Fig. 40. Place two of the cap screws in the threaded holes in the flywheel and tighten evenly. By doing so, the flywheel is forced off the crankshaft. Remove the cap-screws. Remove the flywheel housing.

(c) Remove the oil pan, the dust seal (7), gasket (6), and the plate (8).

(d) Remove the oil pump.

(e) Remove the capscrews holding the oil seal retainer (30). Remove the retainer (30), and gaskets (11) and (13).

(f) Remove the crankcase front cover as per instructions.

(g) Remove the idler gear. Note: This step is not absolutely necessary. With the idler gear removed it is easier to time the engine when reassembling the crank-shaft.

(h) Remove all the connecting-rod bearing caps and push assemblies into the cylinders.

(i) Remove all the main-bearing caps and lift the crankshaft (35) from the crankcase.

c.—Repair.—Check the main-bearing journals for wear, using dimensions given at the beginning of this crankshaft section. Check the gear (36) for wear. If neces-sary, press off the gear and replace. Clean all the oil passages in the crankshaft and crankcase.

d.—Replacement.—(a) Replace all the upper bearings (31), (32), (33), (34), in the crankcase. Be sure the bearings and bearing surfaces in the crankcase are clean.

(b) Place the crankshaft in the crankcase, taking care not to drop the crankshaft on the bearings.

(c) Place the bearings in the caps and replace the caps and nuts and tighten as outlined in above under Bearing Replacement.

(d) Replace connecting rods as outlined under Connecting Rods, Piston Assem-blies, etc.

(e) Replace the gasket (13) and oil seal retainer (30). Be sure the gaskets (11) and dowels (43) are in place. New felt seals (12) should be installed.

(f) Replace the flywheel housing.

(g) Place the flywheel on the crankshaft. The flywheel can be assembled on the crankshaft in only one position in relation to the crankshaft. The capscrew holes are all symmetrical except one which determines the relation of the flywheel to the crankshaft.

(h) Replace the dowels (3) in the flywheel. Place the locks (2) so they cover the dowels, replace the capscrews and tighten to 150 ft. lbs., with a torque wrench.

(i) Replace the gasket (10) and the plate (8). Be sure felt plugs (9) are in place.

(j) Replace the gasket (6) and the dust seal (7).

(k) Install idler gear as outlined in the Timing Gear Train in this section, and time the engine.

(l) Replace crankcase front cover as outlined under that subject in this section.

(m) Replace the oil pump as outlined under that subject in this section.

(n) Replace the oil pan.

(o) The engine is now ready for reassembly in the grader.

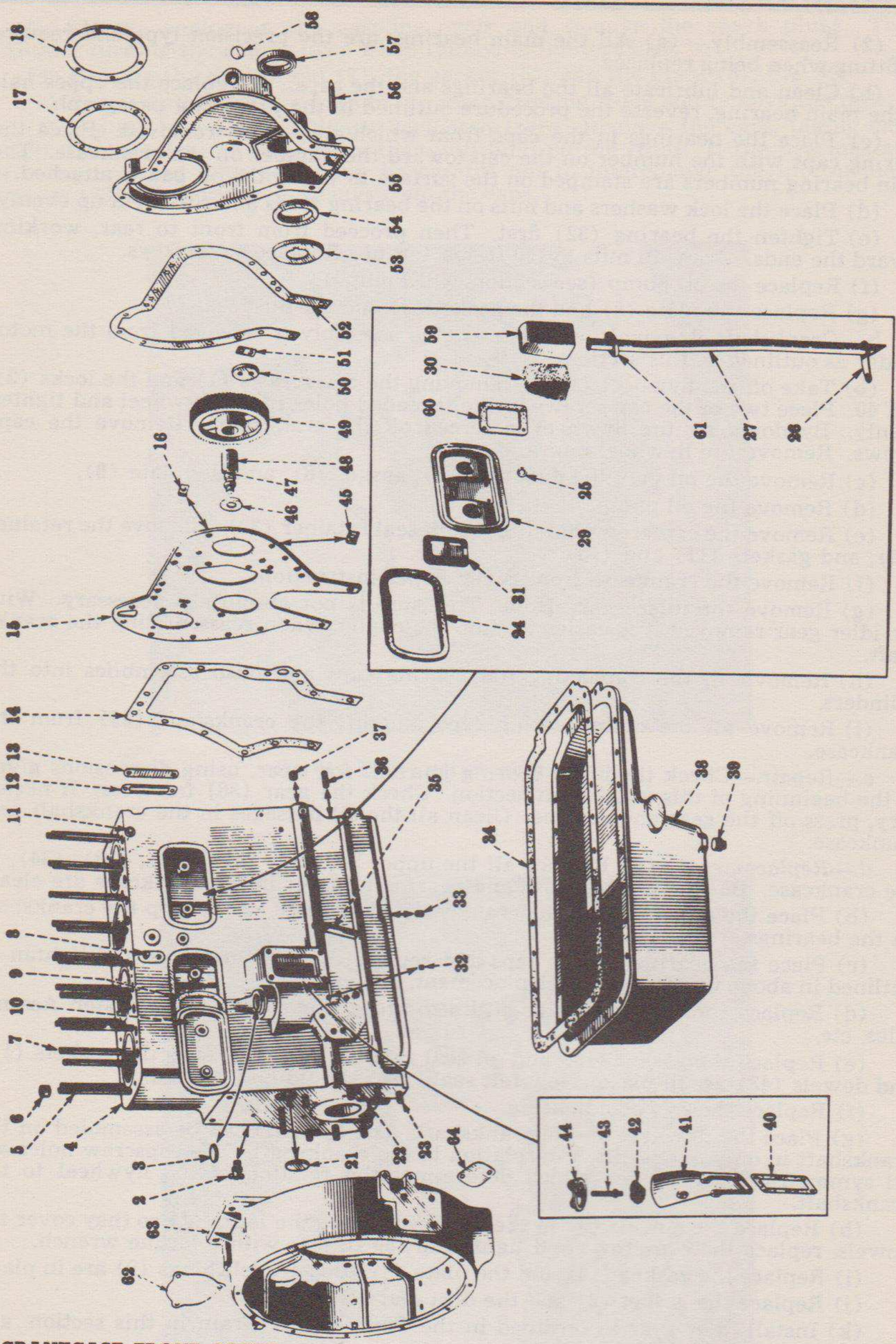

Fig. 43—Exploded view of crankcase.

8. CRANKCASE FRONT COVER

a.—Removal.—(1) Remove the hood, radiator, and fan from the engine.

(2) Remove the crankpin from the end of the crankshaft by loosening the set screw.

(3) Support the front end of the engine under the oil pan with blocks.

(4) Remove the fan belt.

(5) Remove the front support clamp.

(7) Remove nut (42), Fig. 40, and pry off the pulley with the aid of two bent bars.

(8) Remove the front support from the engine.

(9) Remove the three capscrews at the front end of the oil pan which screw into the crankcase front cover, and loosen the first three capscrews back from the front on each side of the oil pan.

(10) Remove the capscrews in the front cover (55), Fig. 43, and pry it off, removing the dowel pins. Remove the pulley key.

b.—Replacement.—(1) Replace the oil seal (57) in the crankcase front cover. Install the oil seal with the edge of the leather to the outside of the cover.

(2) Coat the gasket (52) with a thin layer of grease and place it on the front plate (15). The grease will hold the gasket in place while assembling the front cover.

(3) Place the key for the fan pulley in the crankshaft and start the crankcase end cover back on the crankshaft just far enough so the bottom of the front cover is resting on the edge of the oil pan gasket. Insert the dowel pins and push the front cover into place. Be sure the oil pan gasket is not disturbed.

(4) Replace capscrews in the front cover and tighten.

(5) Replace the three capscrews in the front end of the oil pan and tighten all oil pan capscrews.

(6) Replace the front engine support.

(7) Be sure key (25), Fig. 40, is in place, then replace the pulley (40), the lock washer (41), and the nut (42).

(8) Remove the block support from the oil pan. Replace the front support clamp and tighten.

(10) Replace the fan belt and fan.

(11) Replace the crank pin (37) and tighten set screw.

(12) Replace the radiator and the hood.

9. TIMING GEAR TRAIN

Note: This would only be worked on during a major overhaul when the engine is out of the grader.

a.—Removal.—(1) Remove the crankcase front cover as outlined under that subject in this section.

(2) Remove the idler gear.

(3) The camshaft gear can be removed as outlined under that subject in this section.

(4) The magneto drive gear can be removed by taking out the four capscrews that hold the magneto bracket to the front plate. This permits the assembled magneto, and the magneto drive with bracket, to be removed as a unit.

(5) Remove the three capscrews holding the pump gear (11), Fig. 00, on the hub (14). The gear and lock (10) can be lifted off.

(6) If the idler gear shaft (48), Fig. 43, is worn, it can be replaced by removing the oil pan and taking off the nut inside the crankcase.

b.—Replacement.—(1) Replace the camshaft gear.

(2) Place the magneto assembly on the front plate. Be sure the punch marks on the magneto gear and the camshaft gear match.

(3) Place the pump gear on the gear hub so that the groove in the hub and the groove in the hub surface of the gear match. Place the timing indicator on the gear with the pointer set at zero. Replace the capscrews, tighten and lock.

(4) *Replace the idler gear.* This is done when all the other gears have been put on. The gears are punch marked and stamped "C", "K", and "S". Be sure the punch marks and letters match when assembling the idler gear.

(5) Replace the crankcase front cover, front engine support, fan, and radiator.

10. ENGINE REMOVAL

a.—Remove the hood.

b.—Remove the radiator assembly complete.

c.—Remove the Diesel fuel supply and return lines.

d.—Disconnect the water temperature and oil pressure lines from the engine.

e.—Disconnect the speed and starting controls.

f.—Disconnect the wires for the lighting and starting system from the dash.

g.—Remove the air cleaner, air cleaner pipe to intake manifold, and also the water trap to prevent damage.

h.—Disconnect the primer and starting choke controls.

i.—Place a rope sling on the engine with the rear rope between the rear of the oil pan and the flywheel housing, and the front rope between the crankcase front cover and fan drive pulley. Support with a hoist of sufficient capacity to hold the engine. The engine weighs approximately 1900 lbs.

j.—Support the rear end of the engine and disconnect the clutch. (See Section II). Remove capscrews holding the clutch housing to the flywheel housing.

INDEX

1. INJECTION NOZZLES 45
2. FUEL INJECTION PUMP—BOSCH 46
3. FUEL INJECTION PUMP—I.H.C.—also see Index 49

FUEL SYSTEM

1. INJECTION NOZZLES

a.—Removal.—(1) Remove the fuel injection lines from the nozzles and injection pump. Place caps on the nozzles and pump if caps are available. If they are not, cover the nozzles and pump with clean cloths or something similar to prevent entrance of dirt.

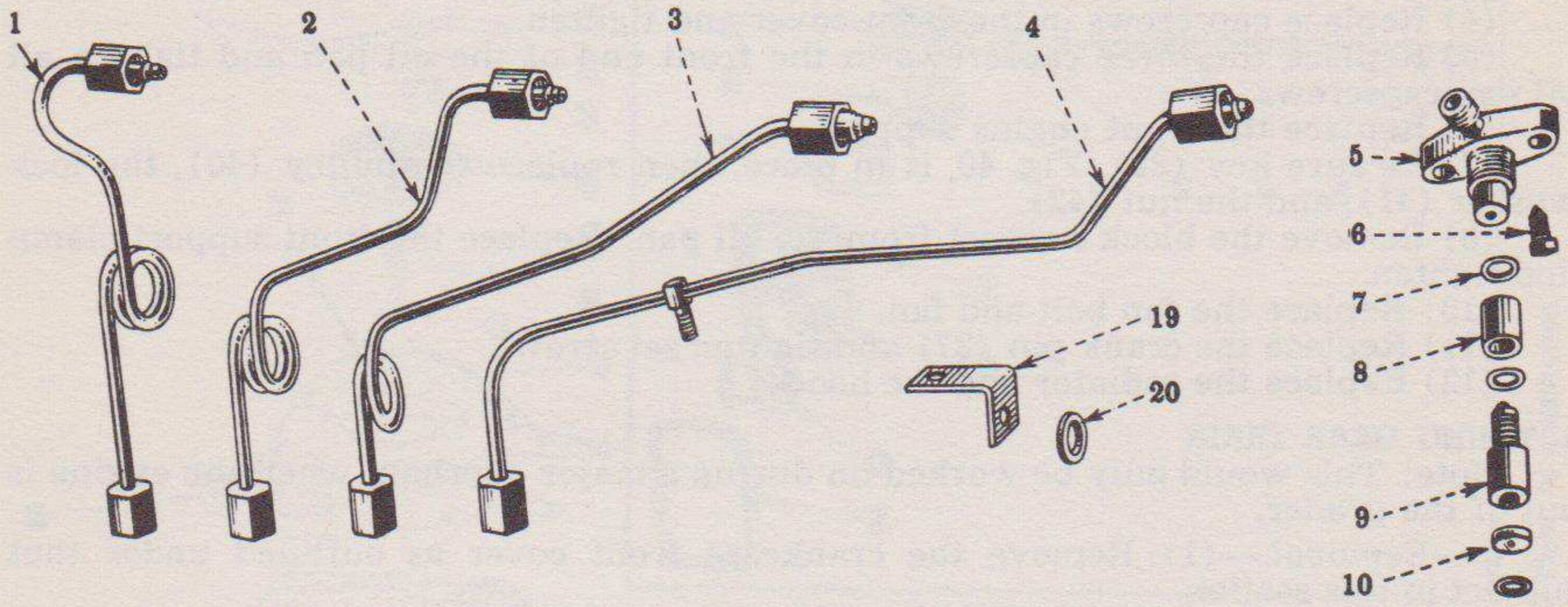

Fig. 44—Exploded view of injection nozzle and pipes.

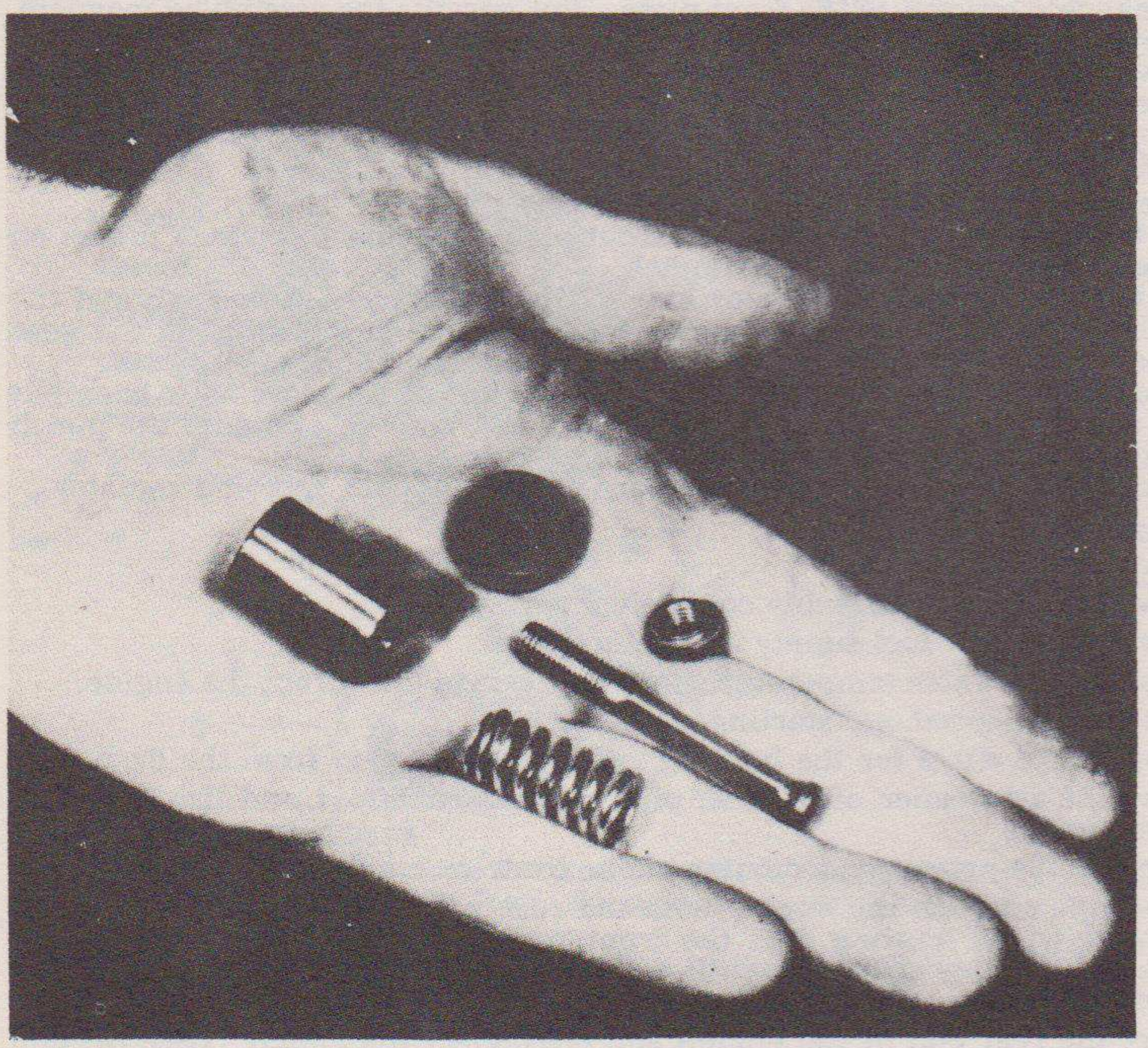

Fig. 45—This is the valve and spring of an injection nozzle.

(2) Remove the nuts on the studs holding the retainer (15), Fig. 44, in the cylinder head and remove the nozzle assembly.

(3) Remove the spacer (18) and the spacer gaskets (17).

b.—Disassembly.—Note: Do not interchange nozzle parts between nozzles.

(1) Remove the cap screws in the nozzle fitting (5), holding it to the retainer (15), and remove the nozzle fitting from the retainer.

(2) Unscrew the nozzle fitting (5) from the nozzle body (11).

(3) The washers (7), spacer (8), valve and spring assembly (9), and injection plate (10) can now be removed from the nozzle body (11).

(4) Measure the length of the spring in the valve and spring assembly (9) before disassembly. *Under no circumstances should the valve assembly be taken apart unless a hydraulic test pump SE-905-A is available for adjusting the nozzles after they have been reassembled.*

c.—Reassembly.—(1) Be sure the valve and seat are thoroughly cleaned before reassembly. Tighten the valve nut to pull the spring down to the dimension taken when it was disassembled.

(2) Replace the lock nut and tighten while holding the valve nut.

(3) Replace the gaskets (7) with new ones.

(4) Clean the carbon from the injection plate (10).

(5) Assemble in the nozzle body (11), the gasket (7), injection plate (10) with valve and spring assembly (9), gasket (7), spacer (8) and gasket (7). Dip each part in light oil before assembling. The surfaces between the injection plate (10) and valve assembly (9) are lapped. To aid in assembling, wipe the surfaces dry and press the injection plate against the valve assembly. The two will remain together while being placed in the nozzle body (11).

(6) Screw the nozzle fitting (5) in the nozzle body (11) and tighten. Adjust the nozzle as outlined in paragraph covering "Adjustment" below.

(7) Clean the carbon from the retainer (15).

(8) Slip the nozzle body dust seal (12) on the nozzle body.

(9) Place the gasket (14) in the retainer (15) and insert the nozzle body (11) into the retainer. Be sure to clean the retainer (15).

(10) Replace the cap screws in the nozzle fitting (5) and tighten evenly into the retainer (15).

d.—Adjustment.—(1) After a nozzle has been assembled, it should be checked with the hydraulic test pump SE-905-A for correct opening pressure as follows: The leakage past the valve at 700 lbs. per square inch should not exceed 5 drops per minute. The valve should be set to open at 700 lb. per sq. in. pressure. If the nozzle does not open at above pressure, it will be necessary to disassemble the nozzle and take out the valve and spring assembly (9) and tighten or loosen the nut on the spring according to whether the valve opens at a pressure below or above 700 lbs. Assemble the nozzle and check again. Repeat the procedure until the correct setting is attained.

e.—Replacement.—(1) Replace the spacer gaskets (17) and dust seal (16). To replace the dust seal (16) in the groove on the retainer (15), use a soap solution (see assembly of cylinder liners) to moisten the seal and retainer. Assembly is made easier and there is less chance of damaging the seal. Clean the spacer (18).

(2) Place the spacer gasket (17) in the head and insert the spacer (18) with side marked "UP" toward the center of engine. Place the spacer gasket (17) in head.

(3) Place the nozzle in the cylinder and tighten the nuts on the studs evenly.

(4) Replace the fuel injection lines to the nozzles and injection pump.

(5) Start the engine and bleed the lines as outlined in the Operator's Section.

2. FUEL INJECTION PUMP (Bosch as used on Grader prior to Serial M3465)

Removal, replacement, and adjustment of the fuel injection pump is covered in the Operator's part of this manual. If a thorough check indicates the pump is the cause of faulty operation, replace the pump with a new one.

OPERATION, INSTALLATION, BENCH TESTING, AND TROUBLE SHOOTING I.H.C. INJECTION PUMP

INDEX

DESCRIPTION 47
PUMP OPERATION 49
OPERATING MAINTENANCE 50
REPLACING BOSCH WITH I.H.C. PUMP 54
REMOVING AND REPLACING FUEL INJECTION PUMP 55
SERVICE SHOP BENCH TESTING 56
TROUBLE SHOOTING 58

DESCRIPTION

The I.H.C. 4-cylinder single-plunger injection pump, Figs. 1 to 4, is flange-mounted to the crankcase front plate. It is a distributor-valve type of pump, using a single eccentric cam to operate a lapped plunger at a constant stroke. This completely enclosed unit has a grey-iron-alloy housing and covers, with a camshaft in the upper half of the housing actuating four distributor valves in the distributor valve block. The governor shaft is located below the camshaft. The governor weights are on the front end of the shaft, and the cam eccentric, which operates the single plunger, is on the rear of the shaft. The removable, single-plunger unit is mounted on the pump housing top face, and to the rear of the distributor block.

The combination primary and scavenging pump (helical-gear type) is mounted on the rear end of the pump housing in line with and driven by the governor shaft. A drive gear that matches with the governor shaft drive pinion (Ratio 4 to 1) is located on the camshaft outside the front of the pump housing. These gears are enclosed by the pump mounting flange. The pump drive gear hub is secured to the camshaft.

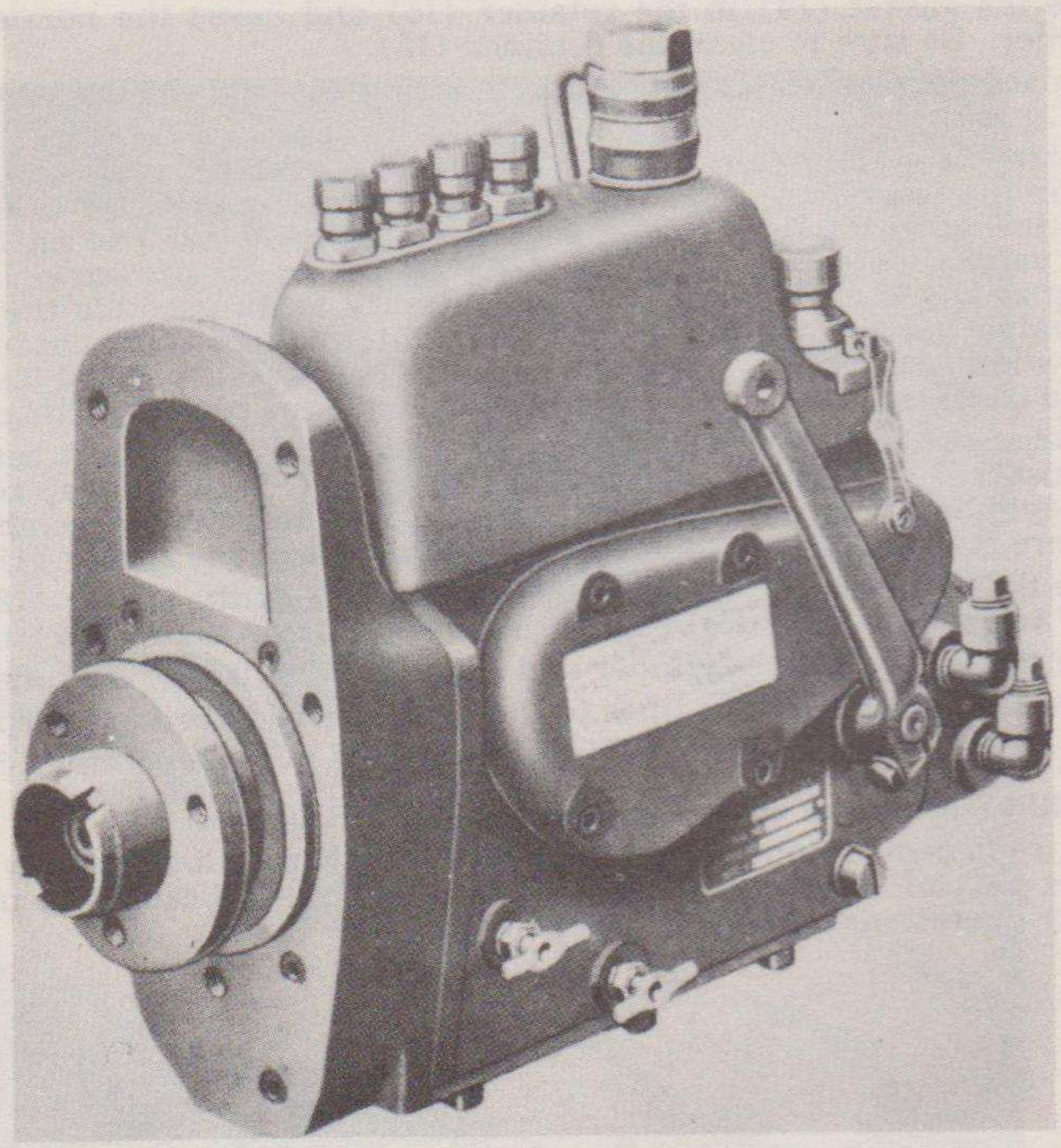

Fig. 1
Three-quarter front view.

The distributor unit, plunger unit, and primary pump are individual assemblies which can, if necessary, be installed on the injection pump while the pump is mounted to the engine without interfering with any other units already assembled.

The individual assemblies are covered in separate sections.

PUMP OPERATION

After passing through the auxiliary fuel filter, the Diesel fuel is pumped by the primary pump through the final fuel filter into the plunger unit and through a .002" strainer into a reservoir around the upper end of the plunger bushing. The primary pump has a bypass valve which maintains practically a constant pressure on the final fuel filter. A fuel return check valve which maintains practically a constant pressure for the charging of the plunger, is located at the uppermost end of the plunger unit.

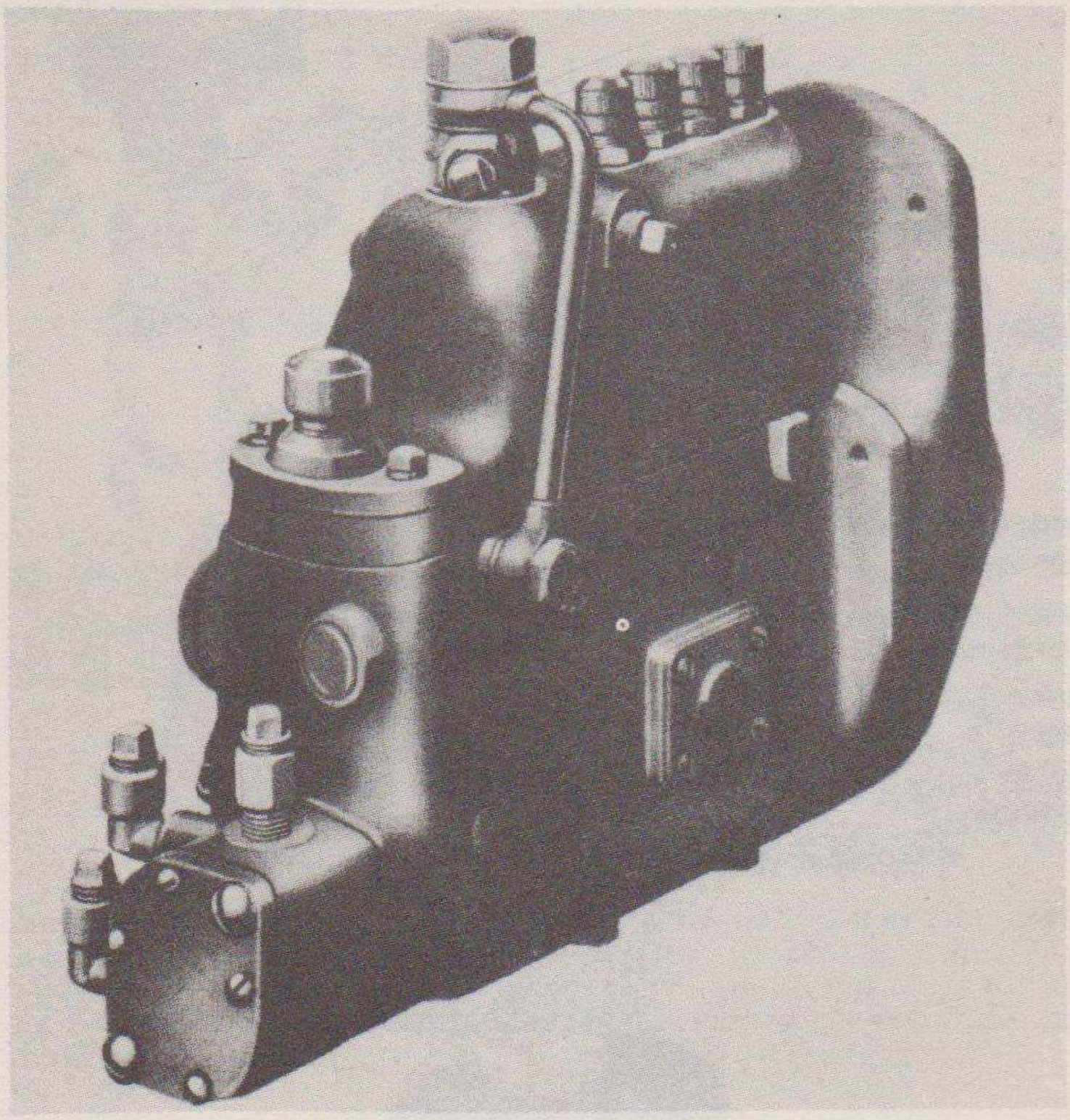

Fig. 2
Three-quarter rear view.

When the plunger is on its downward travel and has uncovered the two radial opposite ports, the fuel rushes into the plunger bushing barrel from the reservoir and completely fills it. During the first part of the upward stoke of the plunger, some of the fuel in the plunger bushing barrel is displaced back into the reservoir through the ports until these ports are completely covered. Immediately after the fuel is put under pressure, the spring-loaded check valve above the plunger is opened, and the fuel is delivered through the high-pressure pipe to the distributor block. It then passes through one of the four distributor valves which has been lifted off its seat by the camshaft, into the injection pipe, and discharged through the injection nozzle into the combustion chamber of the engine.

Delivery of the fuel ceases as soon as the lower helix on the plunger uncovers the bypass port in the plunger bushing. At this instant, the pressure chamber communicates with the reservoir by way of the vertical groove and the lower helix, allowing the spring-loaded check valve to seat, and thereby permitting the fuel not yet delivered to the high-pressure pipe to bypass back into the reservoir.

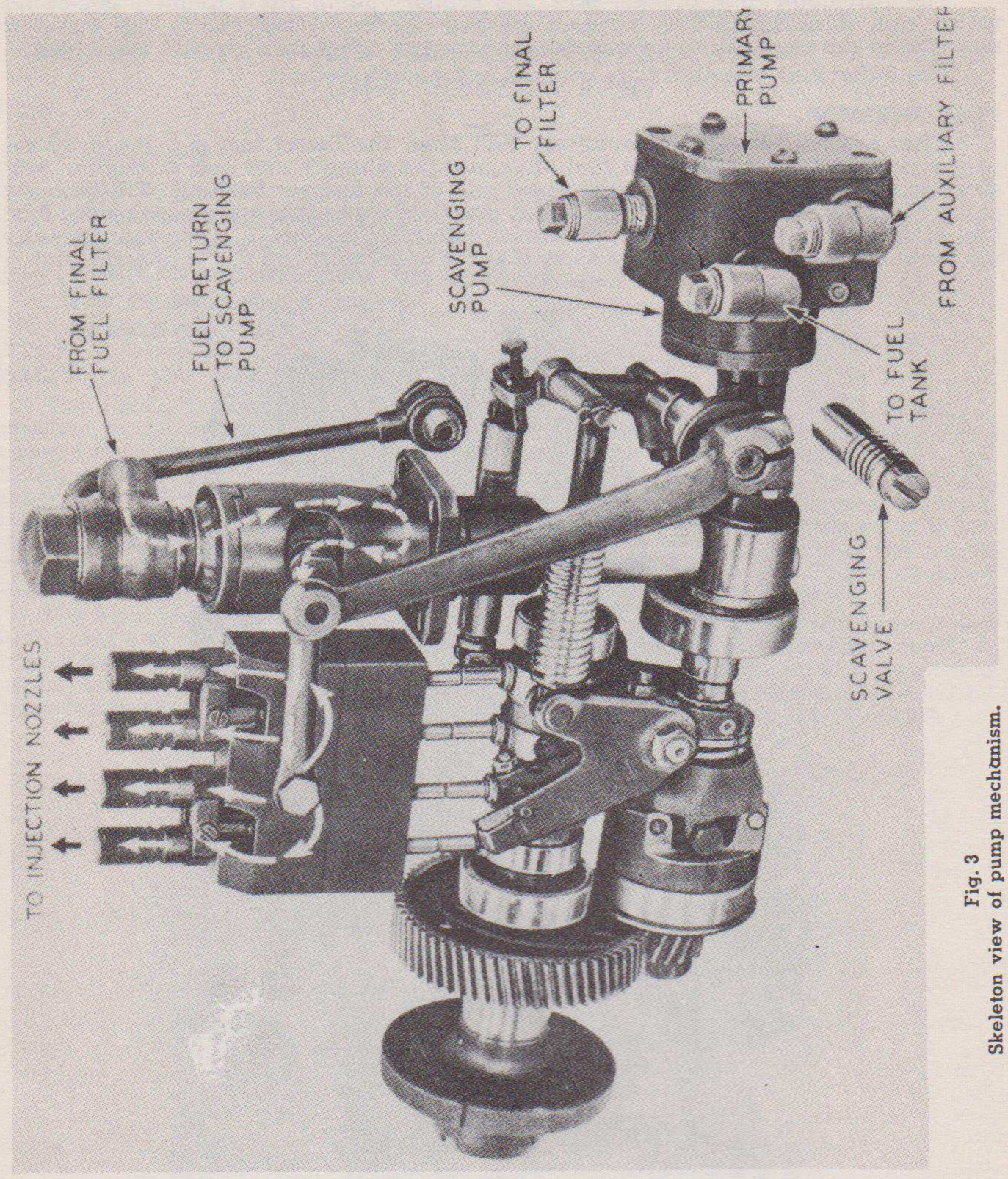

Fig. 3
Skeleton view of pump mechanism.

The check and reverse-check valve unit is located above the plunger bushing. As soon as the bypass port is opened and the check valve seated, the reverse-check valve is opened, due to having a lower opening pressure than the injection nozzle valve. The fuel passes back through the reverse-check valve and through a port which connects to the plunger bushing, now open to the reservoir. This in turn allows the injection nozzle valve to "snap" to its seat, instantaneously terminating the fuel from the injection nozzle valve, and thereby eliminating dribbling. The distributor valve is then let down on its seat by the cam and awaits its turn to be opened again for its next injection period.

The plunger unit goes through a complete cycle for each distributor valve lift or opening. Distributor openings occur in order, 1-3-4-2, for one revolution of the injection pump camshaft.

The start of the injection is controlled by the upper helix. Termination is controlled by the lower helix. Both control the quantity of fuel delivered per stroke. This is varied by turning the plunger in its bushing by the use of a gear and rack.

The control of the fuel per stroke is accomplished by means of the control rack which is actuated by the governor fork. The governor, which is on the governor shaft below the camshaft in the pump housing, actuates the governor fork. The control rack must be moved approximately $\frac{1}{16}$" from its full shut-off position before the delivery of fuel starts. From that point on, the quantity of fuel delivered is directly proportional to the movement of the control rack.

The engine speed and power output are controlled solely by a variation of the amount of fuel injected into the combustion chamber. The variation of the amount of fuel delivered by the injection pump is regulated by the governor which in turn locates the helix on the single plunger with the discharge port in the plunger bushing.

Any movement of the control rack affects the plunger, so that regardless of speed or load conditions, each cylinder of the engine receives the same amount of fuel.

Fuel which is bypassed through the fuel return check valve passes through the fuel return pipe on the back of the pump, and down through drilled passages in the pump housing to the scavenging pump. Any leakage fuel from the plunger and distributor units, flows down to and through a filter and scavenging valve in the lower rear end of the pump housing, into the scavenging pump. It is pumped back to the fuel tank along with the fuel that is bypassed. The scavenging valve is opened by the pressure of the primary pump. A spring closes the valve when the engine is stopped.

OPERATING MAINTENANCE

Air Vents at the Injection Nozzles, Fuel Filters and Water Trap

If fuel pipes or connections have been disconnected and air has entered the system, it is necessary to vent the system. NOTE: The engine will not run properly on the Diesel cycle if there is any air in the fuel injection system.

To remove the air, it is necessary to bleed the system by venting the water trap, fuel filters and injection nozzles as follows:

All air must be vented from the water trap and auxiliary fuel filter before the engine is started by turning on the fuel supply and opening vent "A" in the water trap and vent "B" in auxiliary filter until the fuel flows free of air from these vents. (See Fig. 6).

All air is vented from the fuel pipes at the final filter after the engine is running on the gasoline cycle by opening vent "C" in the final filter until the fuel, free of air, flows from the vent. Next advance the engine speed control lever slightly and open each nozzle vent "D" until the fuel flows free of air.

If the fuel in the fuel tank is allowed to run low, or if the engine is run for a short time with the fuel tank shut-off valve closed, the entire fuel system should be vented. The loss of power, or missing of the engine, is frequently caused by air in the fuel system. To overcome this trouble, it is only necessary to vent the fuel system as described above.

Fuel Oil Water Trap

Clean fuel is important to successful Diesel engine operation. The fuel is strained and filtered between the tank and injection pump by the fuel water trap and filters.

The fuel water trap, located on the left hand side of the engine, should be taken apart and cleaned at least once a week, or whenever there is any indication of water in the bottom of the water trap bowl. Proper servicing of the water trap is necessary to obtain the required life of the auxiliary fuel filter, because his filter, if it becomes water logged, will not pass fuel freely. This, in turn, will impair the engine operation and necessitate premature replacement of the auxiliary fuel filter element.

To clean the water trap, close the fuel tank shut-off valve. Clean the entire water trap thoroughly on the outside to prevent dirt from getting into the fuel passages. Remove the bolt from the water trap top and remove the entire water trap from the engine. Loosen the thumb nut under the water bowl and remove the bail strap. Then remove the glass bowl. *(It is preferable, if you have sufficient clearance, to remove only the glass bowl for cleaning instead of the entire assembly which would break the seal between the bracket and the trap.)* Loosen the gasket and pull the screen off the tube. If the screen is dirty, wash the screen and glass bowl in kerosene or clean Diesel fuel, to remove all dirt and sediment. Reassemble the screen and gasket. The gasket must be in its proper place and in good condition. Then reassemble the glass bowl and strap and tighten the thumb nut by hand. Then assemble the entire water trap to the bracket by tightening the bolt.

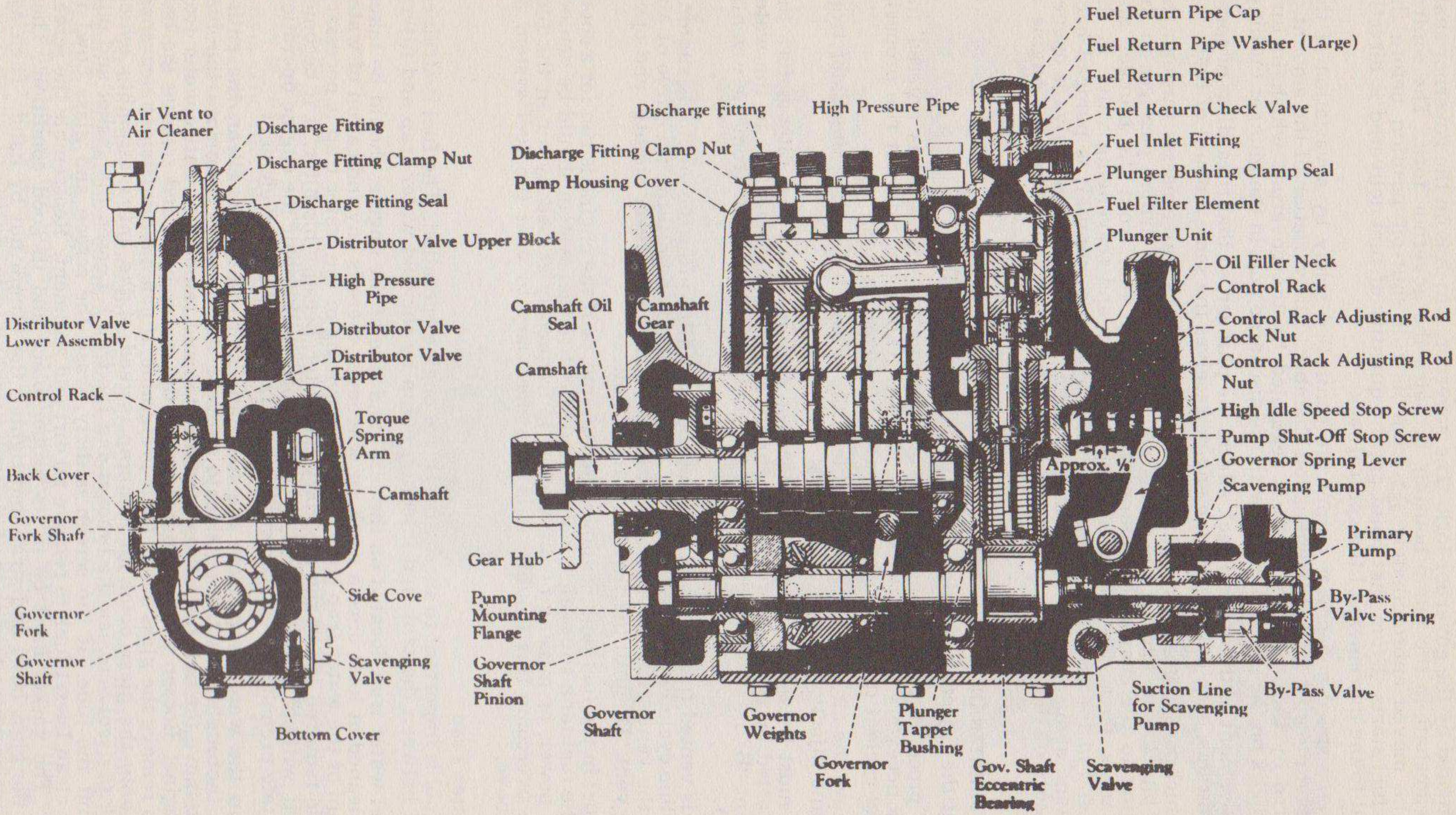

Fig. 4
Cross-section of injection pump.

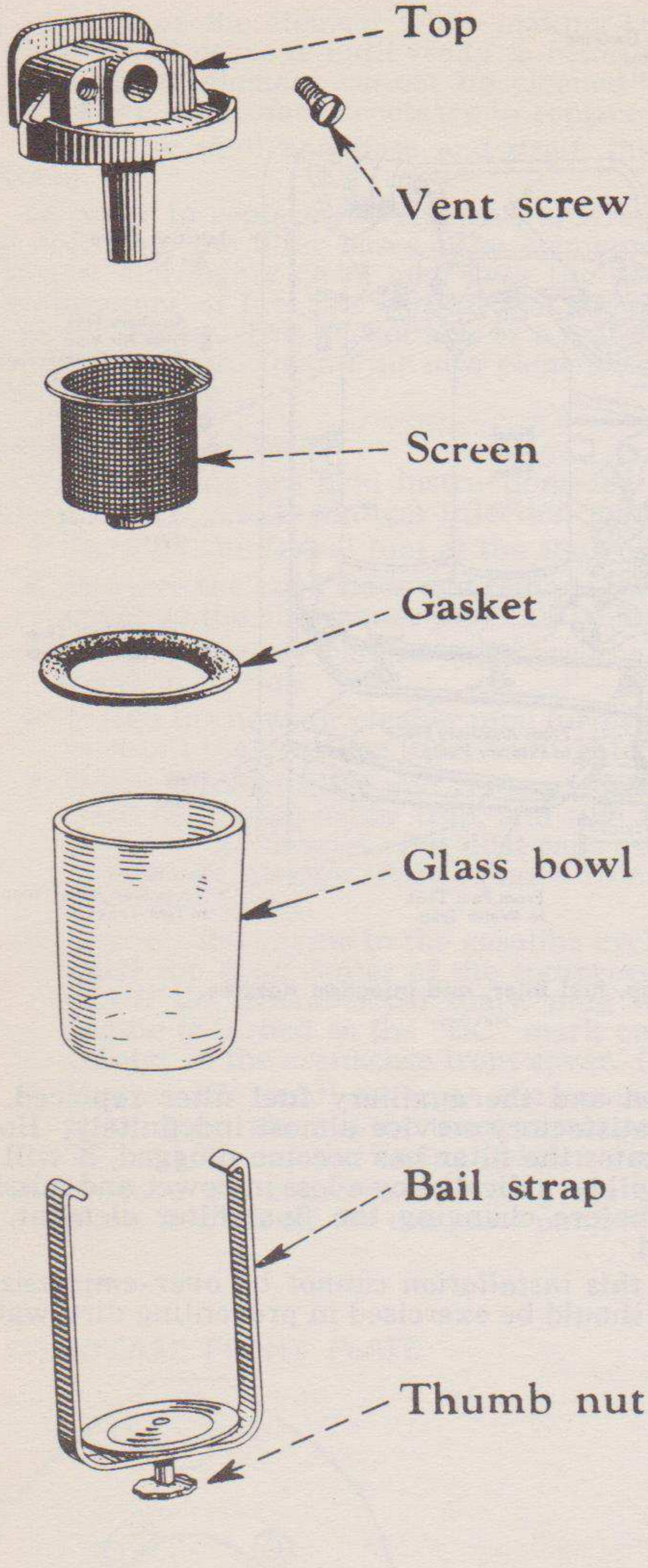

Fig. 5
Fuel strainer and water trap.

After reassembling, open the fuel tank shut-off valve and vent by opening the vent screw. See Instructions for Venting Air.

Auxiliary Fuel Filter

This filter element cannot be cleaned and, therefore, must not be disturbed except when it becomes necessary to replace the element. It will have to be replaced whenever it becomes plugged. This will be indicated by a loss in power, or by the engine missing at full load, because of restricted fuel flow to the engine. Also, the need for frequent venting of the final fuel filter indicates the auxiliary fuel filter has become plugged, assuming all fuel lines are tight.

The life of the auxiliary fuel filter under normal operating conditions will be approximately 1000 hours. Under normal operating conditions it is assumed that the water trap has been properly serviced to prevent water reaching this filter, and the fuel used was per IHC Specifications. It should be clearly understood that the life of this element will be greatly reduced if water reaches it because of not servicing, or too infrequent servicing of the water trap. Another cause of failure would be the use of fuels not within IHC Specifications, which have a high gum or residue content.

The need for cleanliness in making this installation cannot be over-emphasized. Also, in handling the new element, care should be exercised in preventing dirt, water, etc., getting on the element while making this installation. *Leave the new element in the original package until ready to install.*

Clean the shell and base and drain the base of all fuel before removing the element. To remove the element, unscrew the hold-down bolt and lift both the shell and bolt from the filter base. Remove the old element and top and bottom adapters. Rinse the inside of the shell, and also clean the filter base thoroughly with two changes of clean kerosene or fuel. Install adapters on the new filter element, being certain they slide into the wire coil on the inside of the element, and that the top adapter has the face stamped "top" on the top. Replace the old gasket on the bottom adapter with the new one and install the element in the base. Replace the shell and hold-down bolt and draw the shell down tight.

It is advisable to check the auxiliary fuel filter at the drain cock for traces of water at regular intervals. If water is found, it clearly indicates that more frequent servicing of the water trap is essential to obtain the required life of the auxiliary fuel filter element.

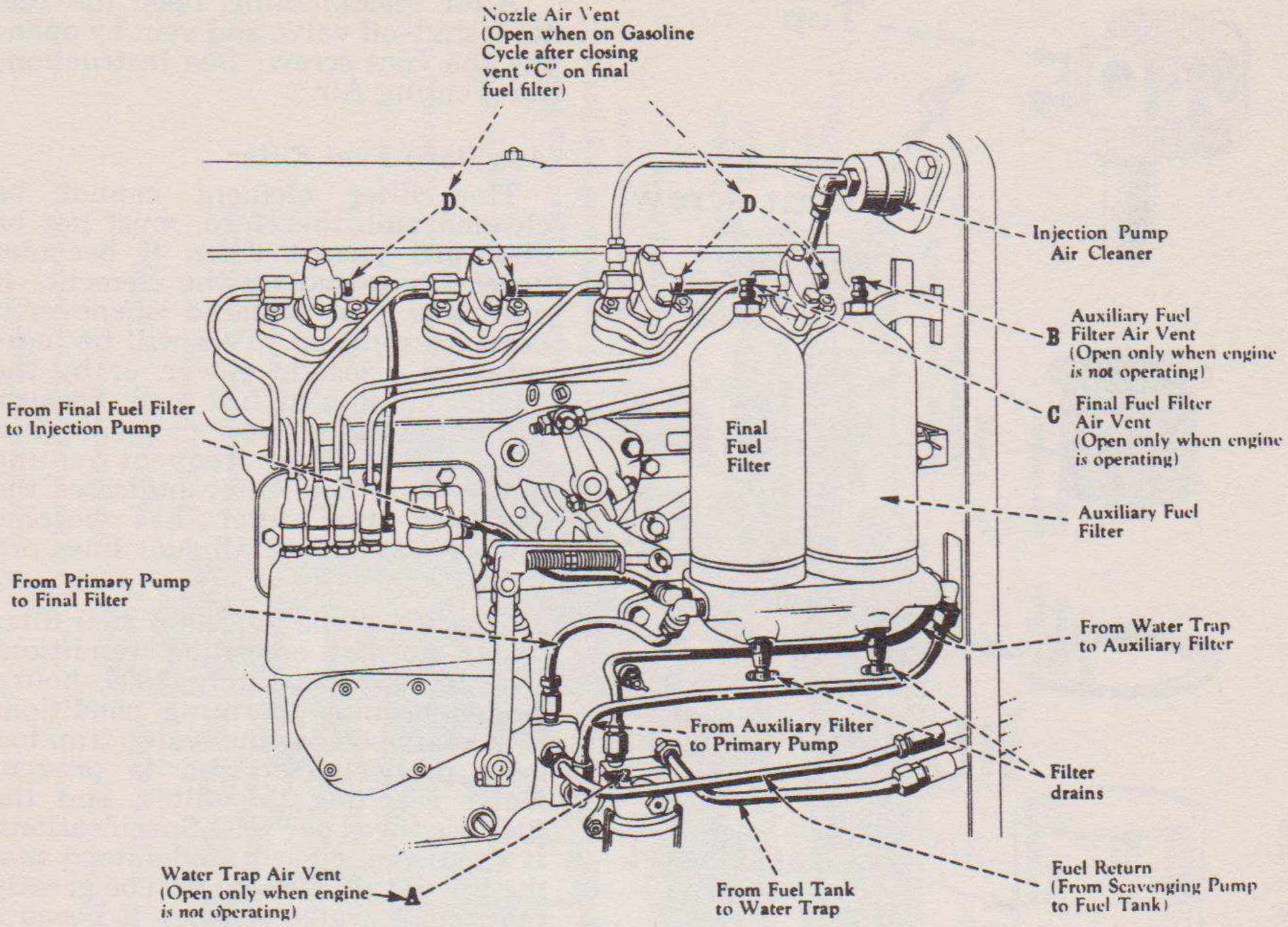

Fig. 6—Air vent at water trap, fuel filter, and injection nozzles.

Final Fuel Filter

If the water trap has been serviced and the auxiliary fuel filter replaced, as specified, the final fuel filter will give satisfactory service almost indefinitely. However, if impaired engine operation indicates the filter has become plugged, it will be necessary to replace the element. This will be indicated by a loss in power and missing of the engine at full load. However, before changing the final filter element, be certain the auxiliary filter is not plugged.

The need of cleanliness in making this installation cannot be over-emphasized. Also, in handling the new element, care should be exercised in preventing dirt, water,

etc., getting on the element while making this installation. *Leave the new element in the original package until ready to install.*

This filter element cannot be cleaned and, therefore, must not be disturbed except when it becomes necessary to replace the element.

Clean the shell and base and drain the base of all fuel before removing the element.

In order to replace the element, unscrew the hold-down bolt and lift the shell and bolt from the filter bases. The element can then be removed. Open the drain cock and thoroughly clean and rinse the filter shell and base with two changes of clean kerosene of fuel. Be certain that the gasket is attached to the bottom plate of the new element. This gasket acts as a seal between the bottom plate on the element and the filter base. Install the new element, replace the shell and hold-down bolt and draw down tight.

I.H.C. PUMP REPLACEMENT

The following are field instructions for removal of Bosch injection pumps and installing I.H.C. single plunger injection pumps on the UD-14 engine:

1. Turn off the Diesel fuel at the shut-off cock under the fuel tank.
2. Remove the hood sides and remove the right-hand side sheet. Loosen the hood cover so the air cleaner pipe can be removed.
3. Remove the air cleaner pipe breather tube for the cylinder head from the right-hand side.
4. Install the new air cleaner pipe furnished with the replacement pump package; reinstall the breather tube; and tighten down the hood cover bolts.
5. Drain the fuel filter and remove the water trap bowl. Remove all fuel lines from the pump, water trap, and fuel filter, including injection pipes from the pump to the nozzles. Put dust caps over the injection pump discharge fittings and nozzle fittings. Also remove from the crankcase the fuel filter complete with its bracket.
6. Convert the engine to the gasoline cycle and turn the engine over to No. 1 cylinder top dead center of the compression stroke. The spark should jump the gap if the disconnected spark plug wire is held near the crankcase as the engine is turned so the "DC" mark on the fan drive pulley lines up with the pointer in the crankcase front cover. (Fig. 8.)
7. Remove the small cover on the crankcase front cover, exposing the injection pump gear. ake out the three capscrews "A", Figure 8, from the timing pointer "F" and lift out the timing pointer with the injection pump drive gear "C".
8. Remove the capscrews holding the injection pump to the crankcase front plate, and lift off the complete pump.

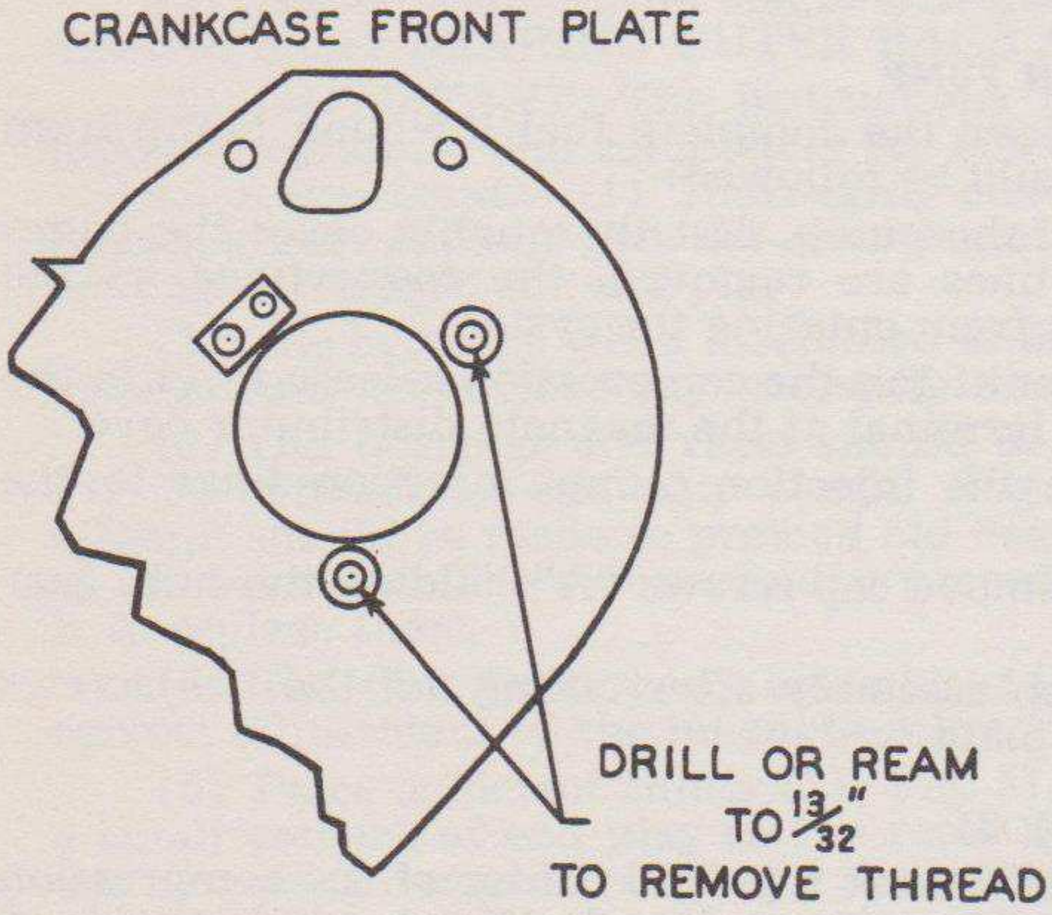

Fig. 7
Drilling diagram for crankcase front plate.

9. Using the drilling diagram drawing ZG-3391, furnished with the I.H.C. pump, or Illustration No. 7, drill or ream out the two 3/8" tapped holes indicated to 13/32". Be sure to hold a rag against the hole while reaming from the rear side of the crankcase front plate to prevent any chips from falling into the gears and oil pan. Coat the drill or reamer with heavy grease to retain the chips. If in doubt, remove the crankcase drain and flush the gears thoroughly.
10. Bolt the new I.H.C. single plunger fuel injection pump to the crankcase front plate, using the bolts furnished. Be absolutely sure the short screw is assembled directly below the injection pump gear hub and that this screw is no longer than 5/8" from the under side of the head to the threaded end. Never use a longer screw at this point.

11. Replace the injection pump drive gear "C" so the chamfered tooth "D" in the center of the graduations lines up with the groove "E" stamped "DC" on the crankcase front cover. Using the two slots in the pump gear hub "B", turn the pump over so the "V" groove running down the side of the hub "B" lines up with the "V" groove on the face of the pump gear "C" adjacent to the gear hub "B." Place the three capscrews "A" in the timing indicator "F" and attach them to the pump gear hub "B" through the cored holes in the pump gear "C."

    Before tightening the capscrews, set the indicator to the number of degrees above or below the "0" as indicated on the tag furnished with the pump. This setting was determined as that giving the best operation on the test engine at the factory. Due to variations in engines and pumps it may be necessary to vary this setting.

    After completing the assembly test the engine for proper timing adjustment, as covered in this chapter. The correct adjustment is obtained when the engine speed is maximum for a fixed load and the engine operation is smooth with clean exhaust. Trying the engine operation with the timing set 4° advance and 4° retard from above setting will indicate the point where the setting will be best.
12. Replace the cover on the crankcase front cover with the gasket in place.
13. Secure the fuel filter base used for the auxiliary and final fuel filters to the crankcase. Secure the auxiliary fuel filter case to the rear position on the base as indicated in Figure 6, with the cloth-type auxiliary fuel filter element (including plates and bottom gasket) all located on the fuel filter case stud. Attach the final fuel filter case to the forward position on the base with the paper disc, edge-type filter element located over the filter case stud.
14. Refer to Figure 6 and attach the fuel lines similar to that shown. The fuel line attaching to the inner fitting on the rear end of the filter base is connected to the top of the fuel oil water trap at its forward connection. The outer connection at the rear of the filter base is used by the pipe connected to the lower rear fitting on the primary pump of the injection pump. On the forward end of the filter base the inner fitting is for the fuel line running to the fuel inlet fitting on top of the pump proper. The outer fitting on the front of the base is used by the fuel line leading to the top of the primary pump. Refer also to the "Operation" heading in this section for an understanding of the path of fuel for this pump.
15. Install the high-pressure injection pipes shipped with the pump and slide the dust covers down over the nuts after they are tightened.
16. Bleed air from the system as outlined under the "Operating Maintenance" heading in this section.
17. Operate the engine and check timing as outlined under that heading in this section and as indicated in step number 11 above.

REMOVING AND REPLACING FUEL INJECTION PUMP

In case it becomes necessary to remove the complete fuel injection pump from the engine, the following instructions should be followed:

Before removing any fuel lines from the pump, first thoroughly clean the pump and connections with fuel. When the lines are removed, the connections on the engine should be covered to prevent dirt from entering the system.

Close the fuel shut-off valve at the tank. Put the compression release lever in the gasoline position. Disconnect the center terminal at the magneto distributor cover.

Disconnect all fuel lines leading to the injection pump injection lines to the nozzles, and injection pump control rod.

Remove the pump gear cover and remove cap screws "A" holding the hub, gear and pointer together. (See Fig. 8).

Remove the complete injection pump assembly after taking out the five screws holding the pump to the crankcase front plate.

To replace the Injection Pump—(See Fig. 8)

1. Crank the engine until the No. 1 cylinder is at top dead center of the compression stroke. This position can be determined by removing the No. 1 spark plug and placing the thumb over the opening and cranking the engine slowly until an outward pressure is felt. Continue cranking slowly until the notch marked "D.C." on the fan drive pulley is in line with the timing pointer in the front crankcase cover.

2. Check the pump gasket and cover gasket to be sure it is clean, and assemble in place.
3. Assemble the injection pump to the engine and secure by center, inner, and lower screws.
4. Place the injection-pump gear "C" on drive hub "B" and assemble the gear (with the engine at top dead center compression No. 1 cylinder), so that the chamfered tooth "D" on the gear lines up with the "DC" mark on the front cover at "E", which is located at the right side of the opening above center.
5. Under no conditions should an attempt be made to retime the engine with the front cover in place by matching the "K" marks on the injection-pump gear and idler gear.
6. Turn the injection-pump gear hub "B" so that the groove on the hub and the groove on the face of the injection-pump gear line up. Place the timing pointer "F" on the hub with the pointer at 0° position against the gear face. Bolt the hub, gear and pointer together with capscrews "A" in this position.
7. Replace the fuel pump gear cover. Reconnect controls, fuel lines, breather tube and injection lines. Replace the magneto terminal and spark plug. Turn on the fuel.
8. Start the engine, bleed the fuel system, and reset the injection timing as required.

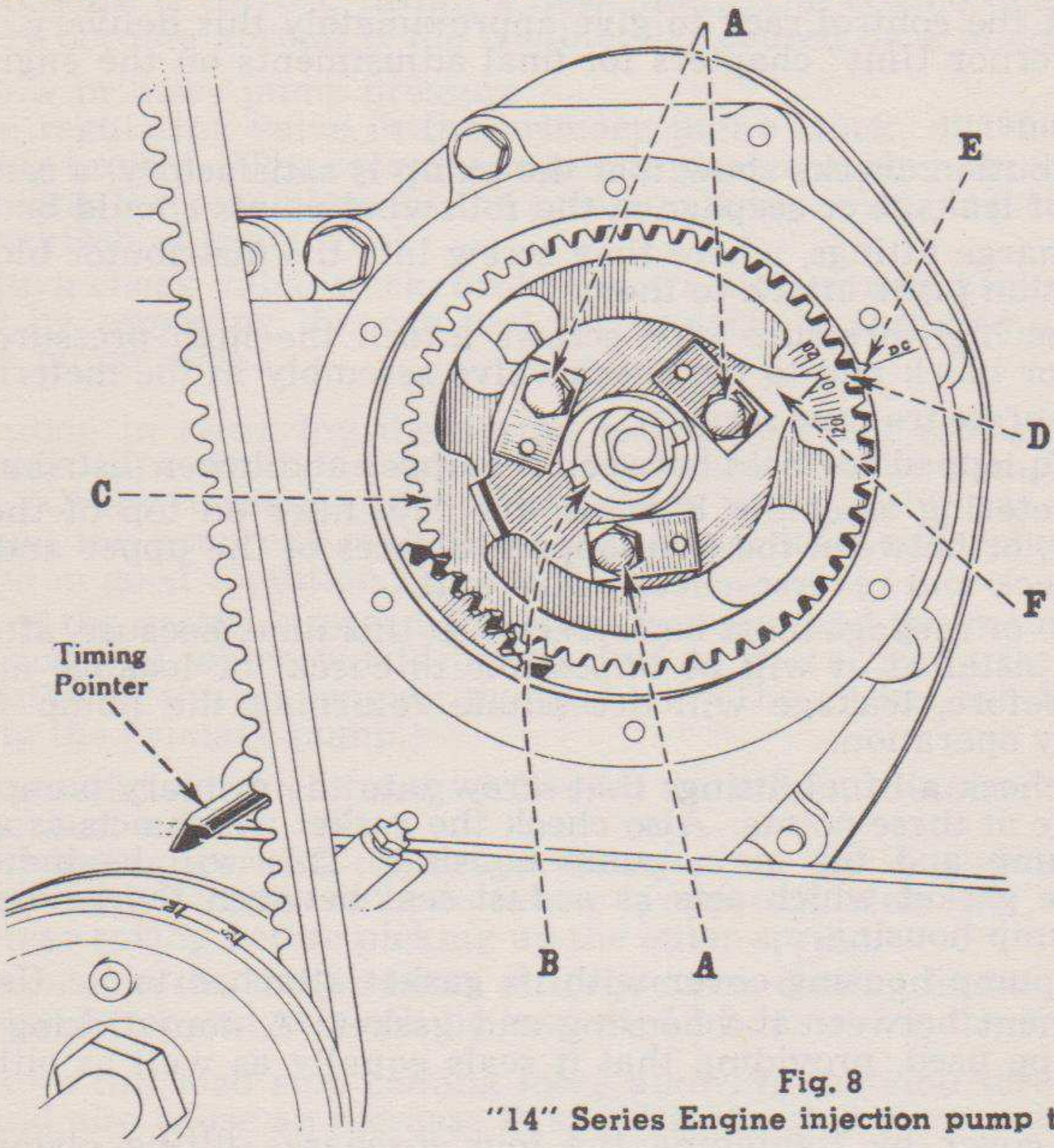

Fig. 8
"14" Series Engine injection pump timing.

SERVICE SHOP BENCH TESTING

There are two important reasons for bench testing any pump that has been rebuilt:

1. To check for uniformity of distribution, and
2. To check for any leakage at the various connections which would impair the pump operation.

Uniformity of Distribution

After the pump has been mounted on the test stand, with the housing cover removed, all fuel lines and injection pipes installed, and the pump properly serviced, a run should be made to check the uniformity of distribution from the nozzles. Be certain the nozzles are all set to the same opening pressure that the injection pipes are of the some length; and that all air has been vented from the fuel system before making the check.

On test benches with drives having only one speed, only one check can be made. On those having variable-speed drives, checks should be made at the full load governed speed at which the pump is to operate. The maximum variation between nozzles must not exceed 4%.

990620 O—52——9

NOTE: To determine the maximum variation in delivery between nozzles, add the delivery from all four nozzles and divide this sum by four. This figure represents the average delivery per nozzle. Determine the difference between this average delivery and the nozzle with a delivery deviating furthest from the average. Divide this difference by the average delivery and if the percentage is less than 4% the delivery is satisfactory.

If this variation exceeds 4%, carefully check for variation between the nozzles and injection pipes. This can readily be done by interchanging the nozzle or injection pipe delivering the least fuel with one delivering the most. If the variation follows an injection pipe or nozzle, the fault is with these and not in the pump. If variation does not follow an injection pipe or nozzle, the fault is probably with the distributor unit which will then have to be repaired or replaced.

MAXIMUM FUEL DELIVERY

(Full Throttle Setting)

ENGINE	*ENGINE R.P.M.*	*4 MIN. AT 550 R.P.M.*
"14" Series	1350	261.0 CC

Operate the pump for four minutes with the control lever in the wide open position. Adjust the control rack to give approximately this delivery. See "Plunger Unit" and "Governor Unit" chapters for final adjustments on the engine.

Check for Leakage

If the distribution checks show that the pump is satisfactory, a careful check for any indication of leakage or seepage at the following points should be made:

1. The discharge fittings, where they screw into the distributor block and where the injection pipes attach to them;
2. where the high-pressure pipe screws attach the high-pressure pipes to the distributor block and to the check valve assembly in the metering unit;
3. the high-pressure pipe screws;
4. at the two lapped surfaces between the upper and lower distributor block; and
5. in the metering assembly between the fuel filter on top of the check valve assembly, or between the two lapped surfaces of the upper and lower blocks of the check and reverse-check valve unit.

Any leakage or seepage must be corrected at this time, because, after the housing cover has been installed, it will be impossible to check for leakage at these points; eventually, therefore, leakage will necessitate returning the pump from the field because of faulty operation.

Be sure to check all fuel fittings that screw into the primary pump for any indication of leakage at these points. Also check the gasket which acts as a seal between the primary pump and the main pump housing. This will be indicated by fuel gathering at the gasket which acts as a dust seal between the primary pump and the injection-pump housing.

Install the pump housing cover with its gasket attached to it. Use shellac or a good gasket cement between the housing and gasket. A non-sticking sealing compound can also be used, providing that it seals equally as well as either shellac or gasket cement.

Secure the cover by tightening the four discharge fitting clamp nuts. Then install the oil filler neck with its gasket. Use shellac, gasket cement, or a non-sticking gasket compound between gasket and top cover. The oil filler neck is clamped down with one seal screw on the left-hand side of pump and one ¼" NC x 1⅜" hexagon-head screw on the right-hand side. Use ¼" lockwashers under the screws.

Install the pump housing side cover with its gasket held in place by shellac or gasket cement. Use five side cover screws, one side cover seal screw (in upper rear end of cover) and six lockwashers.

The pump should now be run long enough to be certain that its performance is entirely satisfactory; and that no leakage or seepage occurs at any of the fittings. The pump can then be removed for installation on an engine.

TROUBLE SHOOTING

Study the problem before making any changes. Be certain the trouble is caused by the injection pump and not by a defective nozzle, low compression pressure, sticking valve, etc.

Engine missing, drop in speed at fast idle, loss of power, or failure to operate on the Diesel cycle.

A. Caused by a lack of fuel because of:—
   1. Air leak on the suction side of the primary pump. (Check all fuel lines and fittings and thoroughly vent the fuel system of all air.)
   2. Fuel tank empty.
   3. Shut-off valve at the fuel tank closed, partially closed, or clogged.
   4. Restriction in the fuel supply system between the fuel tank and the primary pump inlet. (Check the fuel fittings, fuel lines, water trap, and auxiliary fuel filter for restriction.)

NOTE: With the fuel level in the fuel tank above the top of the auxiliary fuel filter, the fuel should flow freely from the fuel pipe when disconnected from the primary pump inlet. (Replace the auxiliary fuel filter if a check shows it is restricting the flow of fuel.)

   5. Final fuel filter partially or completely plugged. (If available, install a pressure gauge in place of the fuel vent in the final filter and check the primary pump pressure. This should be 35 to 40 lbs. at engine speeds of 700 R.P.M. and up. If the pressure is correct, install a new filter. The engine operation will immediately become normal if the trouble was caused by a plugged filter.

B. Caused by low primary pump pressure:—
   1. Pressure regulating valve in the primary pump stuck; dirt beneath the seat, or a spring broken. (The pressure regulating valve, spring, etc. can be inspected by removing the rear plate on the primary pump. Also inspect for excessive wear, backlash of gears, etc.)
   2. Fuel return check valve stuck, broken, worn stop, spring broken, etc. (Can be checked by removing the cap and spring lock in the clamp on top of the injection pump inlet.)

NOTE: Use caution in removing the spring lock to prevent losing the spring and spring seat. The lift of the valve when assembled in the clamp should be .025" to .040". (Check to see that the return check valve bushing is not loose in the clamp and the neoprene seal between the fuel inlet and return fittings is in place and in good condition.)

   3. Failure of the gasket between the primary pump and the main pump housing at the front end which would permit fuel to short-circuit from the primary pump outlet to the scavenging pump inlet. (The gasket can be inspected by removing the primary pump.)

C. Caused by insufficient fuel being delivered to engine because of adjustments coming loose, such as:—
   1. Governor spring working off the governor spring eye, or sleeve. The governor spring assembly length center to center is approximately $4\frac{1}{16}$", with $\frac{5}{32}$" stretch of the inner spring before picking up the outer spring.

      Adjustments on the torque lever or torque arm coming loose. (Spring assembly, torque lever and arm can be inspected by removing the side cover.)

   2. Jam nut on full load stop coming loose allowing the stop screw to work out. This could also cause an increase in speed if the stop screw worked in instead of out. Jam nut on the rack adjusting screw coming loose, permitting the rack to move so that less fuel is delivered to the engine. The rack could also move in the opposite direction, causing an increase in fuel delivery, with accompanying increase in engine speed.

      (These adjustments can be checked by removing the filler neck.)

D. Caused by failure in metering assembly because of:—
   1. Plunger scored, stuck or worn excessively. A scored plunger usually hangs up and as a consequence, the engine will not operate on the Diesel cycle. The same is true of a stuck plunger. When an engine will not operate at slow idle, assuming there is normal primary pump pressure, it is a very good indication that the plunger and bushing are worn and will have to be replaced. Installation of a new plunger and bushing in the field ordinarily should not be attempted.
   2. Plunger tappet tight or stuck in bushing. A tight plunger tappet causes unsteady engine operation, missing, and in some cases, failure to operate on the Diesel cycle. Correction of this difficulty necessitates complete teardown of the pump.

3. Plunger spring broken. This causes erratic engine operation and in most cases, failure to operate. (Removal of the metering assembly and replacement of the spring will correct trouble. In reinstalling the metering assembly, be sure the double space on the control gear slips over the double tooth on the rack; also that no binding occurs between the rack and gear. This can be checked by moving the torque lever, with the governor spring assembly removed, back and forth while someone slowly cranks the engine.

Engine surging at fast, intermediate, or low idle.

Basically, surging is caused by excessive friction. In this case, it will be in the governor or metering mechanism.

With the side cover off and the governor spring assembly removed, check the torque lever for free movement by moving it back of forth while some one slowly cranks the engine. Any excessive friction or binding can easily be felt. If binding does occur, it can be readily determined whether it is in the governor or metering assembly. If there is no perceptible free movement of the torque lever, it is in the governor mechanism. If there is a very slight amount of free movement equivalent to back lash between the teeth on the control gear and rack, it is the metering assembly.

Removing the metering assembly to determine the cause of binding, or opening up the pump to investigate governor trouble ordinarily should not be attempted in the field..

A slow idle surge may be caused by inerference between the inner and outer governor springs or insufficient stretch on the inner spring before picking up the outer spring. This stretch should be $\frac{5}{32}$", plus or minus $\frac{1}{64}$".

A very fast surge at high idle is sometimes caused by dirt at, or impaired operation of, the reverse-check valve. This requires opening up the plunger unit. This should not be attempted with the pump on the engine.

Pump sump dilution caused by:—

A. Stuck scavenging valve or tappet or defective seals on scavenging valve body. Remove scavenging valve cap with wide-bit screw driver and scavenging valve assembly with special service tool. Complete assembly can then be inspected, repaired, and replaced.

B. Screen in the leakage passage becoming clogged. Remove the bottom plate, withdraw the screen, clean and replace.

Uneven operation on one or more cylinders caused by:—

Distributor valve sticking open or distributor valve spring failure.

This can easily be checked by moving the governor control lever forward, with injection pipes disconnected and engine operating on the gasoline cycle, and observing uniformity of the fuel discharge from discharge fittings. An excessive amount discharged from any one fitting indicates failure. The distributor block will have to be repaired or replaced.

Injection Pump Timing

The injection timing may be advanced or retarded by means of the slots in the gear. This adjustment must be made when the engine is not operating.

The injection pump is fitted with a timing adjustment. The pump timing adjustment indicator is bolted through the slots in the injection-pump gear to the gear hub. The gear hub is keyed to the injection-pump shaft. The pump gear timing indicator can be seen by removing the pump gear cover.

The adjustment is normally set with the indicator on the center mark of the graduations on the pump gear. In order to be sure of the best operating conditions, the indicator can be tried on either side of the center mark and set at the best operating position.

To change the location of the indicator, "F", loosen the capscrews "A" holding the indicator and the gear hub "B" to the gear "C" and turn the gear hub "B" until the indicator is at the desired position; then tighten the cap screws "A" (See Fig. 8).

For advanced position, turn the gear hub clockwise and for retarded position, turn the gear hub counter-clockwise.

The correct adjustment is obtained when the engine speed is maximum for a fixed load and the engine operation is smooth with a clean exhaust.

PRIMARY AND SCAVENGING PUMP

INDEX

DESCRIPTION AND OPERATION 60
REMOVAL 61
DISASSEMBLY 62
REPAIR 64
REASSEMBLY 67
REPLACEMENT 69

DESCRIPTION AND OPERATION

The primary and scavenging pump consists mainly of a grey-iron alloy housing provided with inlet and outlet connections, bearing cage, cover, drive gears, idler gears, drive shaft, idler shaft, packing and bypass valve. The drive shaft is provided with two bearings, one in the primary pump housing and one in the bearing cage.

The drive gears are keyed to the drive shaft which is rotated by the governor shaft. The idler gears are driven by the drive gears and rotate on the idler shaft.

Spring-loaded chevron packing on the drive shaft prevents leakage of fuel. One set located between the primary pump and scavenging pump prevents leaking from the primary pum into the scavenging pump. The second set, located in the bearing cage, prevents leakage of fuel into the lubricating oil sump of the injection pump.

The primary pump cover has a gasket between it and the primary pump housing which determines the end clearance for the primary pump gears. The cover is fastened to the primary pump housing by four capscrews and acts as a seat for the bypass valve spring.

The bypass valve seat, which is pressed into the primary pump housing, and the valve lie horizontally in the housing. Passages are drilled in the primary pump housing from the pressure side of the gears to the pressure side of the bypass valve. Opening of the valve releases fuel to the inlet side of the gears, recirculating the fuel within the primary pump.

Diesel fuel enters the primary pump at the lower side connection, is carried around in the primary gear tooth space, and forced out at the upper connection by the meshing of the gear teeth. When a pressure of 35 to 40 pounds per square inch is reached, the bypass valve is raised off its seat by the pressure, and permits the fuel not delivered to the plunger unit to be recirculated.

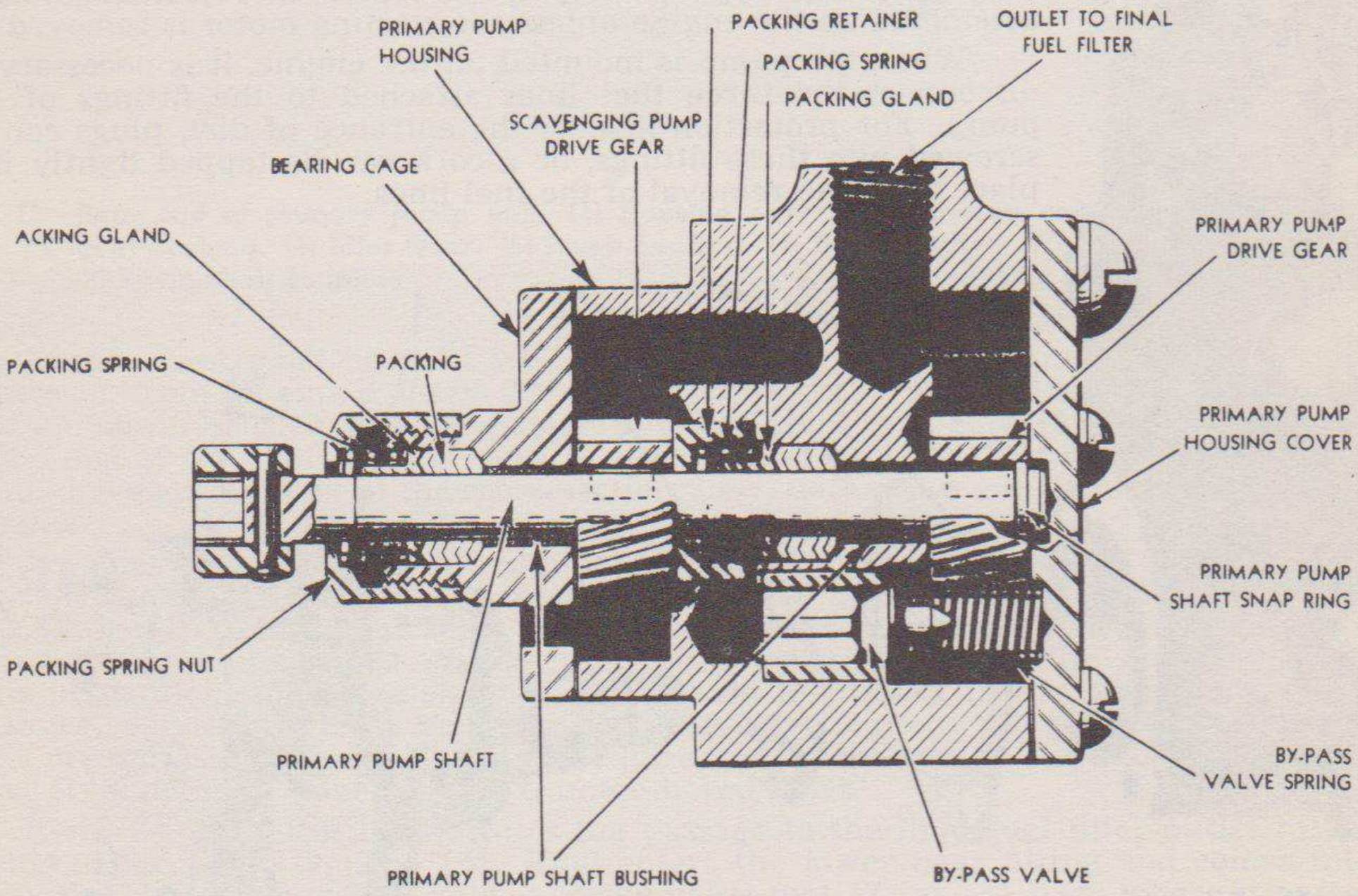

Fig. 10—Cross-section of primary and scavenging pump unit.

The purpose of the primary pump is to pump fuel from the fuel supply through the auxiliary fuel filter and the final fuel filter to the plunger unit, under practically a constant pressure. It is very important that the primary pump maintain a pressure of 35 to 40 pounds per square inch. The plunger unit will not be charged correctly when the primary pressure is low, thus causing a loss of engine power. A pressure gauge attached to the primary pump outlet fitting will show the primary pump pressure when the pump is operating at normal speed.

The operation of the scavenging pump is the same as that of the primary pump.

The bearing cage acts as a cover for the scavenging pump gears, and has a gasket between it and the pump housing which determines the end clearance for the scavenging pump gears. The bearing cage is located on the pump housing by two dowel pins and fastened by three capscrews. When the pump is clamped to the injection-pump housing, two holes in the bearing cage register with similar holes in the injection-pump housing. One hole allows leakage and return fuel to enter the scavenging pump. The other hole connects the high-pressure side of the primary pump to the valve tappet of the scavenging valve.

The leakage and the return fuel are pumped out at the forward outlet fitting on the side of the primary pump housing, back to the fuel supply tank. The return of all the leakage fuel by the scavenging pump to the fuel supply tank saves this waste, eliminates the need for any overflow tube, and prevents dilution of lubricating oil in the sump.

An injection-pump air cleaner, connected to the engine air cleaner outfit, is provided for the injection pump to permit the scavenging gears to pump air when there is not sufficient fuel to meet their demand.

In cases where a loss of power is encountered, check the pressure developed by the primary pump at operating speed. If low pressure is found, remove the housing cover and clean the valve and seat. Dirt on the valve seat will cause low pressure and loss of power. If cleaning the valve restores the pressure, but loss of power is still evident, refer to the "Plunger," "Distributor," and "Governor" instructions which follow.

REMOVAL

Removal and replacement of the primary pump unit can be accomplished when the injection pump is either on or off the engine. Except for special applications such as starting motors on some engines located directly behind the pump, removing the primary pump may not be possible when the injection pump is assembled on the engine unless the starting motor is removed.

When the pump is mounted on the engine, it is necessary to disconnect the three fuel lines attached to the fittings of the pump. For protection against the entrance of dirt, plugs can be screwed into these fittings, or a cork can be tapped lightly into place after the removal of the fuel lines.

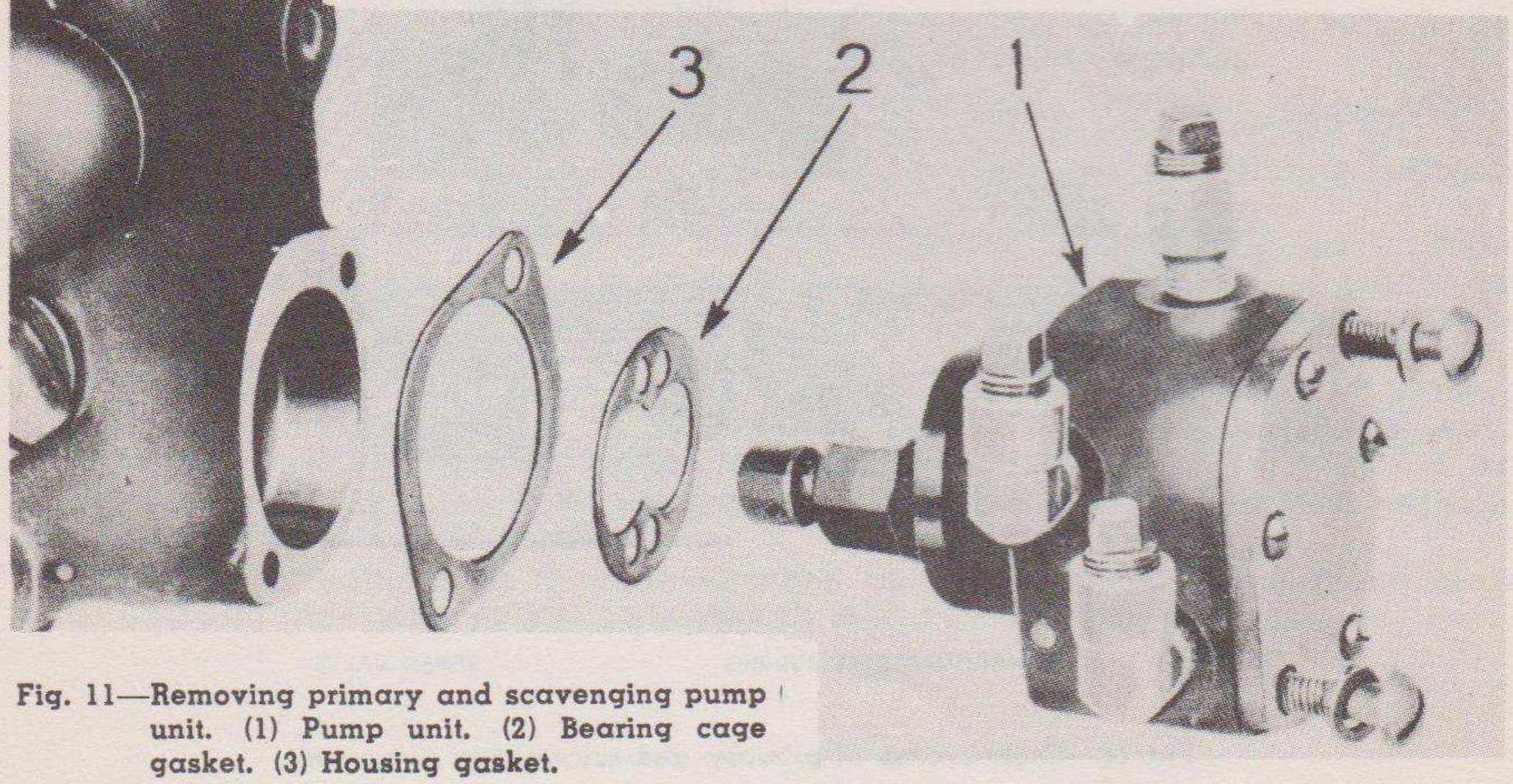

Fig. 11—Removing primary and scavenging pump unit. (1) Pump unit. (2) Bearing cage gasket. (3) Housing gasket.

Unscrewing the two large round-head capscrews in the rear of the primary pump housing (1) will allow the unit to be removed as shown in Figure 11. The gaskets (2) and (3) will ordinarily come out with the unit.

If a replacement pump is to be installed immediately, new gaskets can be assembled and the unit replaced as outlined under that heading.

DISASSEMBLY

With the primary pump removed from the injection pump, it can readily be disassembled for inspection and/or replacement of the parts. The first step is indicated in Figure 12 which shows the removal of the pump housing cover (1) by removing the four small round-head screws. Gasket (2) will adhere to the cover.

The bypass valve spring (7) will fall out immediately. Turning the pump over will allow the bypass valve (6) to drop out of the pump housing. In this same position it may be necessary to turn the primary pump shaft at the coupling (8) to make the idler gear (4) with bushing (3) drop off the idler gear shaft in pump housing (5). The bushing (3) is shown in the exploded view to designate its availability as a service part. It will have to be driven from the gear if replacement is necessary.

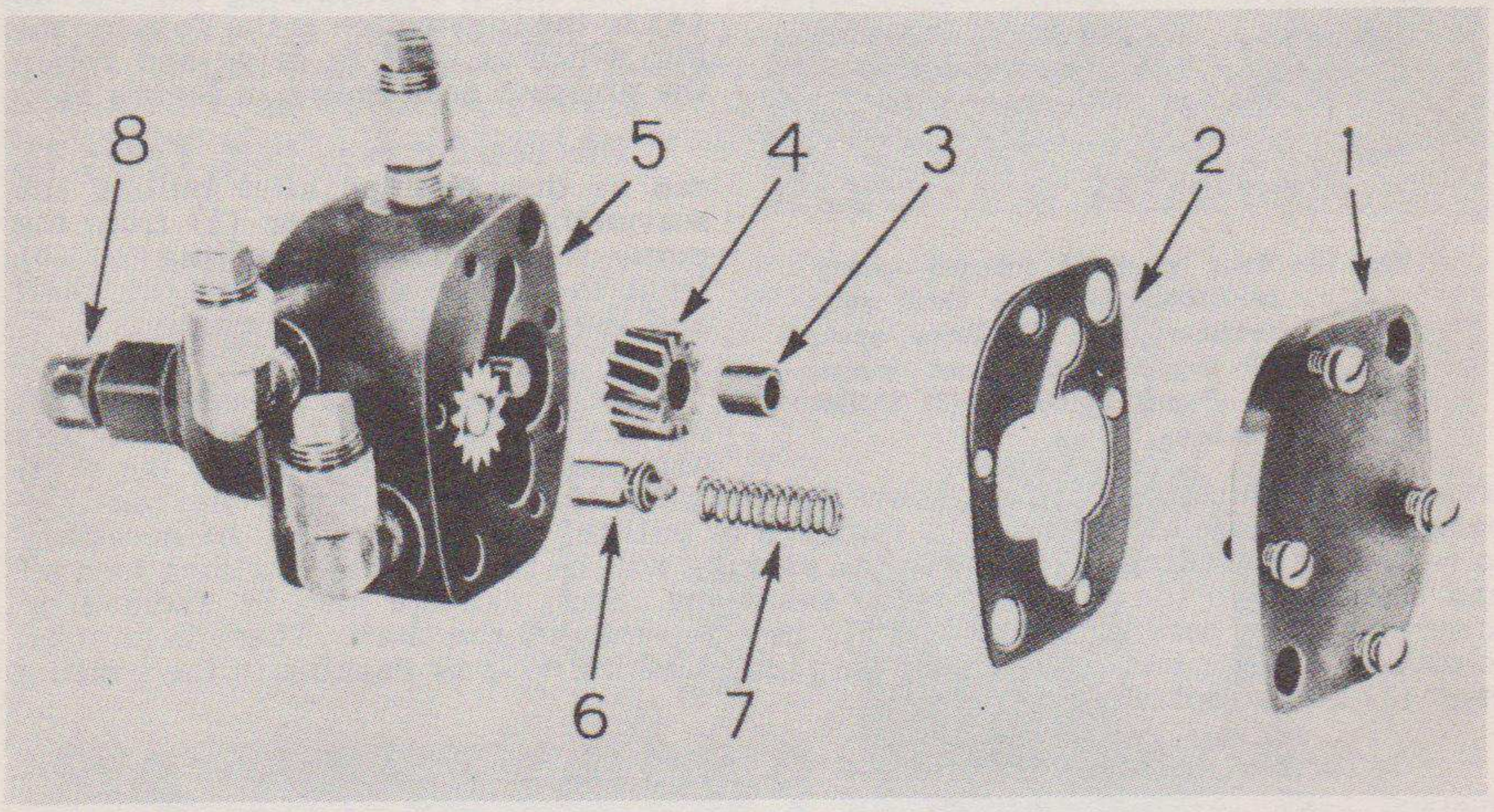

Fig. 12—Rear end of primary pump unit. (1) Housing cover. (2) Housing cover gasket. (3) Idler gear bushing. (4) Idler Gear. (5) Pump housing. (6) Bypass valve. (7) Bypass valve spring. (8) Pump shaft coupling.

Special care must be used when removing the primary pump drive gear (2), Figure 13, from the pump shaft. The shaft coupling (8), Figure 12, should be pushed into the pump housing just far enough to allow pin (1), Figure 13, to be pushed out of the end of the shaft. If the shaft is pushed too far in, the key for scavenging the pump drive gear shown in the cross-section view, will strike and damage the packing retainer.

Injection pumps after serial number 830 for the "14" Series pumps, have a different construction for driving and retaining the drive gear (2). These pumps have the gear (2) keyed to the pump shaft and retained with a snap ring. Shafts on these later pumps must be pushed far enough into the housing to remove the snap ring. The same precautions must be observed with regard to the key in the scavenging pump pressure gear. Remove the key from the shaft after slipping the gear off; the gear is not a press fit on the shaft. This style requires a new end cover. The end cover for the other style does not have the two counter-bored holes.

Item (5) in Figure 13, indicates the passage to the final fuel filter outlet fitting on top of the pump housing (4). Fuel enters the lower near fitting and comes into the gear chamber above the valve and the valve seat (3) at (6) from where it passes around the outside of the gear chambers to the passage and hole (5). All excess fuel is bypassed from passage (5) to the inlet through the bypass valve.

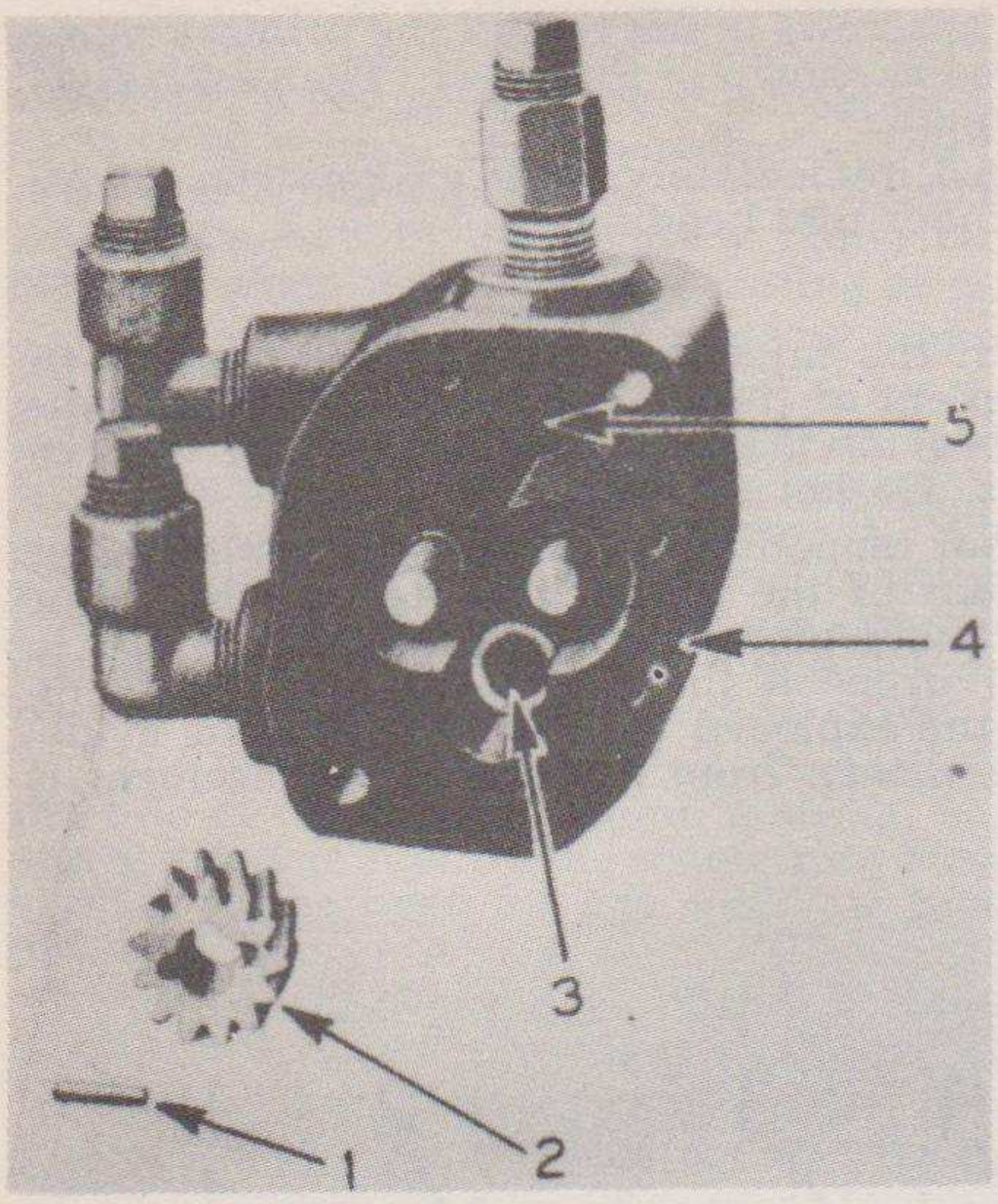

Fig. 13—Rear view of primary pump housing. (1) Pump shaft gear retaining pin. (2) Drive gear. (3) Bypass valve seat insert. (4) Pump housing. (5) Outlet passage.

The front end of the primary pump can now be removed as a unit. It is only necessary to unscrew the three fillister-head machine screws from the bearing cage (3), Figure 14, and withdraw the bearing cage assembly complete.

On pumps after serial number 830 for the "14" Series pumps, having the snap ring on the end of the primary pump shaft, use extreme care in withdrawing the bearing cage unit. If the groove for the snap ring catches in the chevron packing and considerable force is required to pull the shaft out, it will be necessary to replace the packing. Damage to the packing will be indicated by portions torn off and imbedded in the groove for the snap ring. The gasket (2) will adhere to the bearing cage. Item (4) in the illustration is the hole for the pin which is used to drive and retain the pressure gear shown in Figure 13.

The bearing cage unit, Figure 15, can be disassembled after pulling the scavenging pressure gear (1) from the pump drive shaft (8), removing key (2) from the shaft, and pulling the shaft and coupling from the assembly.

On pumps having the snap ring on the end of the primary pump shaft, use extreme care in withdrawing the shaft from the bearing cage. If the groove for the snap ring catches in the chevron-type packing and considerable force is required to pull the shaft out, it will be necessary to replace the packing. Damage to the packing will be indicated by portions torn off and imbedded in the groove for the snap ring. Such damage may be avoided by unscrewing the packing spring nut (7) before removing the shaft. There is no need to make a further teardown unless the pump bushing (10) or packing in the bearing cage (3) needs replacing.

For further disassembly, hold the bearing cage (3) and unscrew the packing spring nut (7). The spring (6) is freed for removal. Packing gland (5) can likewise be lifted from the packing (4). The packing may have to be dug out of the bearing cage (3). There are four or five segments to the packing (4), making $\frac{11}{32}$" total length.

The scavenging pump idler gear (3) with bushing (4) can be easily slid from the idler shaft in the pump housing (3). The bushing is shown exploded to designate its availability as a service part. It will have to be driven from the gear if replacement is necessary. This same procedure holds true for the bushing (1) for the primary pump shaft in the pump housing. This bushing can be removed after taking off (5), (6), (7), and (8) as outlined below.

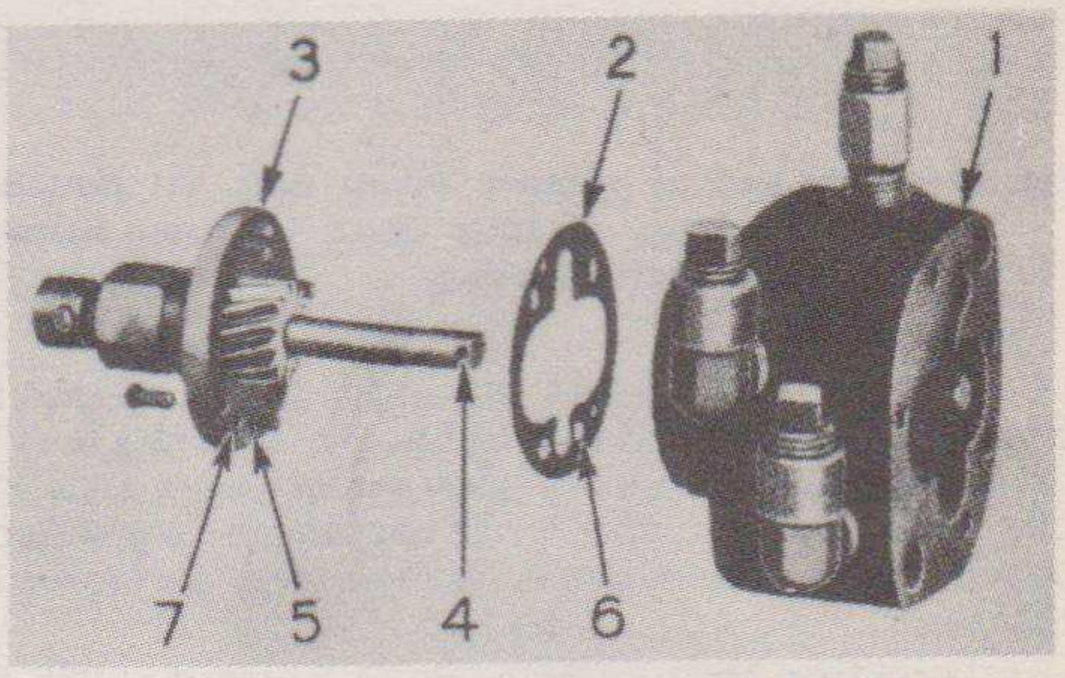

Fig. 14—Bearing cage removed. (1) Pump housing. (2) Scavenging gear gasket. (3) Bearing cage. (4) Hole for gear retaining pin. (5) Passage for oil pressure from primary pump. (6) Hole in gasket (2) to match hole in bearing cage (3). (7) Inlet for scavenging pump.

The items remaining in the primary pump housing, Figure 16, need not be removed unless a check definitely shows the packing (5) is allowing the primary pump oil pressure to leak into the low-pressure scavenging pump section. To remove

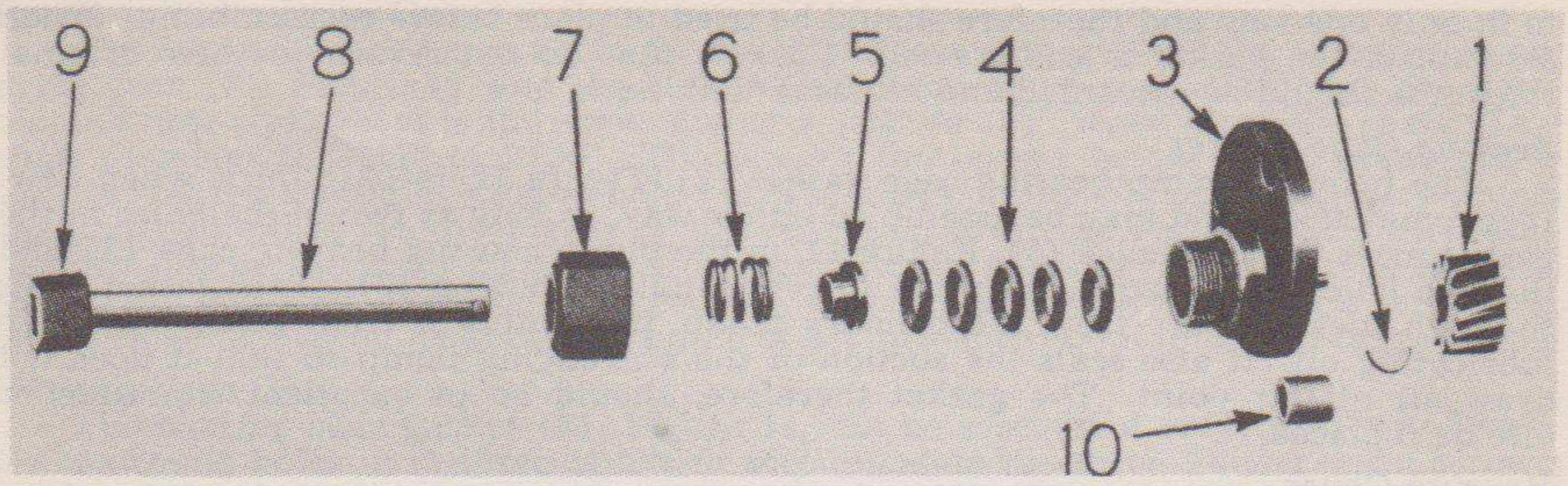

Fig. 15—Bearing cage assembly. (1) Scavenging pump drive gear. (2) Drive gear key. (3) Bearing cage. (4) Pump packing segments. (5) Packing gland. (6) Packing spring. (7) Packing spring nut. (8) Primary pump shaft. (9) Primary pump shaft coupling. (10) Bearing cage bushing.

the packing, the primary pump packing retainer (8) will probably be damaged. It is a press fit in the pump housing (3). The segments of packing (5) will have to be dug out so that a small brass rod inserted from primary pump end may be used to drive the retainer out of the housing. With the retainer removed, the spring (7) and the packing gland (6) are freed for removal. The five segments of the packing (5) can now be removed.

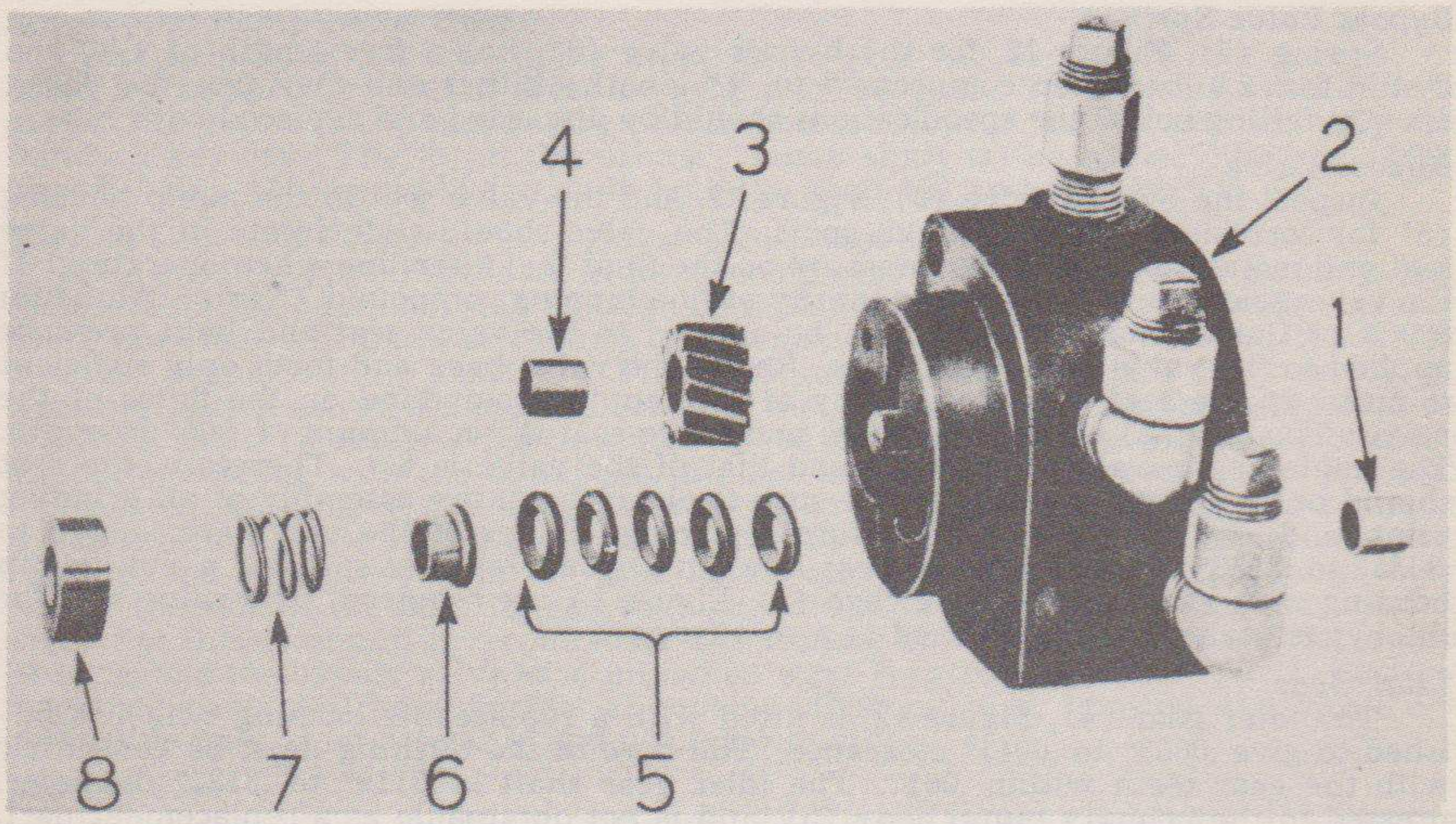

Fig. 16—Primary pump housing assembly. (1) Pump housing bushing. (2) Pump housing. (3) Idler gear. (4) Idler gear bushing. (5) Pump packing segments. (6) Packing gland. (7) Packing spring. (8) Packing spring retainer.

REPAIR

Before inspecting any of the parts, thoroughly clean all the parts of gums and dirt with a good solvent. Blow off all parts with clean, dry air. Flush all these parts, passages and holes with a quick evaporating fluid to remove any moisture that may have been deposited from the air used.

Housing Gasket

The primary pump housing gasket (3), Figure 11, when new, is $\frac{1}{16}$" thick. Its purpose is to keep out dirt. It fits between the outside rear face of the injection-pump housing and the large diameter front face of the primary pump housing. It is made

to fit only one way and therefore should be tried in place before reassembling. When assembled, the gasket is compressed. Gaskets that do not return to their original thickness should be discarded and replaced with new.

Bearing Cage Gasket

The primary pump bearing cage gasket (2), Figure 11, is .031" thick when new. It is symmetrical and may be assembled either way, so long as two of the holes in the gasket meet the two holes (5), Figure 14, in the pump housing bearing cage (3) and the two holes (1), Figure 19, in the injection-pump housing (2). This gasket seals the high fuel pressure from the primary pump, preventing it from getting into the lubricating oil. It also seals the suction of the scavenging pump so that it does not draw air at this point. The gasket therefore, should be in excellent condition or else be replaced.

Housing Cover

The primary pump housing cover (1), Figure 12, will show the results of wear from the primary pump gears. If the shafts are square with the primary pump housing cover, the wear should be even. Wear on the end cover may be corrected by using a surface plate and lapping the inner face of the cover. The cover is normally ¼" thick and the depth of the small counterbores is $\frac{1}{16}$". The added counterbore in the new style covers (for new style shafts) is .100" to .105" deep. If the surface contacting the gears is rough, the cover should be refinished or replaced.

Housing Cover Gasket

The housing cover gasket (2), Figure 12, is furnished in two thicknesses, .004" and .006". If the gasket is not damaged it may be reused. Use the proper gasket or combination of gaskets to give the end clearance as determined in the reassembly procedure.

Bypass Valve Spring

Spring (7), Figure 12, for the bypass valve (6), has a free length of $1\frac{3}{16}$" and should test 2.9 lbs. when compressed to ¾" length. Either end may face the valve. Springs falling below the specifications should be discarded and replaced with new.

Bypass Valve

Inspect the bypass valve (6), Figure 12, and the valve seat in the pump housing (5) for corrosion, pits, and rough spots. The valve should slide freely in the valve seat and maintain 35 to 40 lbs. pressure on the final fuel filter line when operating. If the valve seat is pitted, a small quantity of fine lapping compound (Norton Alundum 600 X or Carborundum H-400) can be applied to the valve seat and light pressure applied to the valve with the fingers. Rotate the valve back and forth only sufficient to clean up the seat. Do not get any of the lapping compound on the flutes of the valve. The original seat on the valve and valve seat is a maximum of .005" in width. The angle of the valve seat is 64° and that of the valve is 60°. Therefore, the seat should be as narrow as possible. Be sure to clean the entire assembly of all grinding compound; dip the parts in oil before replacing. Flutes of the valve are lapped to .3435" to .3433". If the valve or seat is worn beyond sensible salvage, a new pump housing with valve and bearing cage (3), Figure 14, are required. The valve seat for the bypass valve is not furnished as a service part.

Idler Gear

The idler gear (4), Figure 12, is fitted with a replaceable bushing which is finished to give .0003" to .0011" clearance. The bore of the bushing must be concentric with the gear teeth within .001". The idler gear shaft is .3119" to .3122" diameter, pressed in the primary pump body (5), and is not obtainable as a replacement part. If a new gear has excessive play on the idler shaft, the entire housing will have to be replaced. This shaft extends through the housing and also is the shaft for the scavenging pump idler gear. The idler gear for the scavenging pump is the same part as the gear used with the primary pump drive gear. The outside diameter of these gears is .8440" to .8445". The clearance between the outside of the primary pump idler gear and the bore in the pump housing is .0015" to .0025", and .002" to .0045" for the scavenging pump idler gear. This clearance may be checked with a ¼"-wide feeler gauge ribbon. The pump shaft should be turnable as the ribbon is slid around between the housing and the gear teeth. If the gear bushing is worn, ordinarily the pump housing will be worn as well as the bushings in the pump housing, necessitating complete replacement of the housing. If the gear bushings are replaced, they must be pressed in place, three holes ($\frac{1}{16}$" diameter) drilled through the bushing, and the bushing reamed to size concentric with the outside of the gear. Bushing ends are $\frac{1}{32}$" inside the faces of the gear. The finish of the bushing is important since the gear turns at twice engine speed. Backlash between the gears is normally .002" to .004".

Primary Pump Drive Gear

The dimensions and clearances for the idler gears also apply to the primary pump drive gear (2), Figure 13, and the scavenging pump drive gear. The bore for both old and new style gears is the same, giving a .003" to .009" loose fit on the shaft. The shaft diameter is .3117" to .3120". The pin for the pumps below serial number 830 for "14" Series, should fit snug in hole (4), Figure 14, in the end of the primary pump shaft. When either the drive gear or the idler gear are to be replaced, replace both, not just one or the other. The speed at which these gears revolve must be kept in mind. If a complete overhaul is in process, replacement of all worn parts with new will insure the overhauled primary pump of performance equal to that of the original.

Bearing Cage Gasket

The bearing cage gasket (2), Figure 14, can be assembled only one way. There are six round holes in it, three of which accommodate the three fillister-head screws used to hold the bearing cage (3) to the housing (1). Two other equal-sized holes accommodate the dowel pins which locate the bearing cage on the pump housing so that the bushing in the bearing cage and primary pump housing are in perfect alignment. The hole (6) in the gasket (2) lines up with the hole (5) in the bearing cage (3). The gasket material around the hole (6) must seal the primary pump pressure from the scavenging pump compartment. The primary pump pressure through the holes (5) and (6) actuate the scavenging valve in the injection-pump housing. The cutaway section of the gasket adjacent to the hole (6) lines up with the hole (7) in the bearing cage (3) and is the suction side of the scavenging pump.

With this function of the gasket, it is important to use a new or a perfect-condition gasket at this point. The gasket (2) is furnished in two thicknesses, .004" and .006". These gaskets are used singly or in combination to obtain the end play for the gears as covered in the reassembly procedure.

Scavenging Pump Drive Gear

When checking the scavenging pump drive gear (1) Figure 15, the dimensions listed for the primary pump pressure gear may be used. These gears are different parts. The gear (1) is plain, has no counterbore or slot for the pin, and has only the standard keyway. The fit on the primary pump shaft is the same, .0003" to .0009" loose fit. Key (2) should fit snugly in both the shaft (8) and the gear (1).

Bearing Cage and Primary Pump Housing Bushings

The bushing (10), Figure 15, in the bearing cage (3), as well as the bushing (1), Figure 16, in the pump housing (2), can be replaced. Ordinarily if one needs replacement, the other will likewise require replacement. The clearance between the .3117" to .3120" primary pump shaft (8), Figure 15, and the bushings are .0005" to .0013". bushings is necessary. To accomplish this, the bearing cage must be assembled to With this small clearance on such a high-speed shaft, an absolute alignment of these the pump housing with the dowel pin in place and all screws drawn tight. The two replacement bushings can then be line-reamed at the same time. Merely line-reaming is not sufficient. The bushing bores must be in line, square with the faces of the housing, and concentric with the gear bores, otherwise the close-fitting gears may rub on the side of the housing and may cut into the housing cover and the bearing cage. For this reason, it is recommended to replace both the bearing cage, the pump housing, and the bypass valve as a unit when wear is excessive in these parts. Factory machined parts will have perfect alignment. Bearing cage, housing and valve are obtainable only as an assembly and not individually.

Bearing Cage

Dowel pins which locate bearing cage (3), Figure 15, are retained in the bearing cage. The surface of the bearing cage facing the scavenging pump may be resurfaced square with the bore if wear from gears is of minor nature. With dowel pins removed, slight grooves may be lapped out on a surface plate. Replacement of the bushings is covered under that heading. If the packing has been removed, inspect the bushing for possible damage. Bushing clearance with the shaft is .0005" to .0013".

Shaft Packing

In the cross-section view of the primary pump, the direction of the chevron-type packing is shown. The "V" of the first segment of the packing (4), Figure 15, (also (5), Figure 16) faces the packing gland (5). This is followed by two or three similar pieces. The total length of all segments to be used should be $\frac{11}{32}$". The piece adjacent to the bearing cage bushing can be distinguished from the others by its shape; there is no groove on the rear side. Inspection on removal may indicate faulty assembly that may have caused difficulty at this point.

Packing Gland

The packing glands (5), Figure 15, and (6), Figure 16, should never require

repair or replacement, unless damaged during the removal procedure. The clearance between the pump shaft and the packing gland is .0035" to .0053". Its purpose is to compress the packing into contact with the shaft.

Packing Spring

The primary pump shaft packing springs (6), Figure 15, and (7), Figure 16, are identical. The free length of the spring is $\frac{17}{32}$" and should test 4½ pounds at $\frac{5}{16}$". Both ends of the spring are the same. Springs not measuring up to this standard should be replaced.

Packing Spring Nut

There should be no occasion to replace the packing spring nut (7), Figure 15. The thread size on both the nut (7) and the bearing cage (3) is ¾"—20 N.E.F.2.

Primary Pump Shaft

The file-hard primary pump shaft (8), Figure 15, is ground and polished to maximum smoothness for uniform diameter over its full length. The normal diameter is .3117" to .3120". The clearance between this shaft and the bushings in both the pump housing and the bearing cage is .0005" to .0013". The shafts for some pumps have the drilled hole for the pin, while those for later pumps have the groove for the snap-ring gear retainer.

Pump Shaft Coupling

The coupling (9), Figure 15, on the end of the primary pump shaft (8) should never need replacement. It must be flexible on the end of the pump shaft and be able to oscillate through 5° angular movement. If a new coupling is to be installed, an angular-point peening tool should be used to spread the hollow end of the rivet.

Packing Retainer

The primary pump packing retainer (8), Figure 16, is made of bronze, finished to .7820" to .7825" for a press fit in the pump housing. When in place it must be flush with the inner surface of the housing. The sketch for reassembling indicates the .500" to .501" dimension below the surface to which the retainer must be pressed. Its prime purpose is to hold the spring pressure on the pump packing. The bore in the pump housing is .7810" to .7815".

REASSEMBLY

With all items used in the primary pump unit reconditioned or replaced, and thoroughly cleaned, the reassembly can be accomplished by reversing the removal procedure. To start with, the packing, gland, spring, and retainer can be replaced.

The first segment of the five packing sebments to enter the pump housing has the beveled edge facing the bushing. This is the only segment not having a "V" groove. The other four will have the grooved side facing the ridge of the first segment installed. Insert them singly and push them in place, then put the packing gland against the packing as shown in the cross-section view and as shown in the exploded view, Figure 16.

With the spring placed over the packing gland, the packing retainer can be pressed in place. When in place, the face of the retainer should be .500" to .501" below the surface of the pump housing as shown in the sketch. This can be measured with a depth micrometer gauge for accuracy. It is a good policy to have the shaft in position when pressing retainer in place. The face of the retainer must be square with the bore and not cocked in the housing. Thoroughly lubricate this packing before operating the pump.

The reassembly of the bearing cage unit, Figure 15, can be accomplished by reversing the teardown procedure.

The first segment of the packing facing the bushing is assembled the same as that for the pump housing. Then assemble the packing gland, spring, and the packing spring nut. Lubricate the packing and insert the primary pump shaft. The packing spring nut can be drawn tight against the bearing cage after the bearing cage is assembled to the primary pump housing. Push the pump shaft far enough through the bearing cage to allow the key for the scavenging pump drive gear to be assembled. Press the gear on the shaft over the key, and push the shaft far enough to allow the key to come flush with the face of the gear. This will allow enough room to assemble the snap ring or pin in the shaft when the primary pump drive gear is assembled. If the shaft is pushed beyond this point, the key will damage the spring retainer. Be careful when making all end play checks and removals of the primary pump pressure gear.

Lubricate the scavenging pump idler gear and its shaft and slip the gear into place. If the same gears, housing, and bearing cage are reassembled, use the same thickness of gasket between the bearing cage and the pump housing, Figure 14. Be

PRIMARY AND SCAVENGING PUMP SERVICE CHART

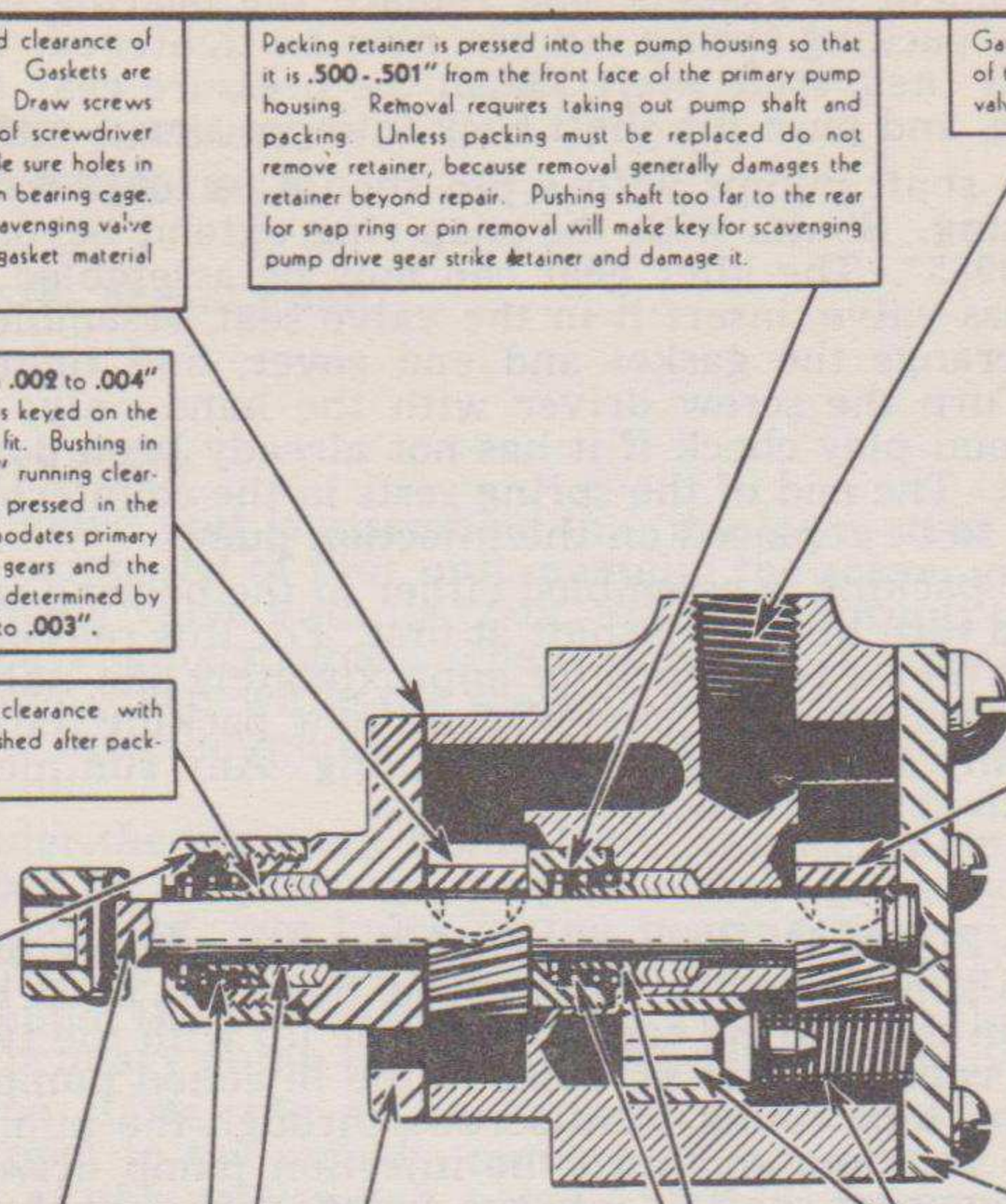

Bearing cage gasket is used to obtain end clearance of **.0015-.003"** for scavenging pump gears. Gaskets are furnished in **.004"** and **.006"** thickness. Draw screws in bearing cage tight with hand turning of screwdriver only when making end clearance check. Be sure holes in gasket register with holes and dowel pins in bearing cage. Primary pump pressure used to operate scavenging valve is sealed from scavenging pump by the gasket material between holes in the bearing cage.

Scavenging pump drive gear operates with **.002** to **.004"** backlash with the idler gear. Drive gear is keyed on the shaft and has a **.0003** to **.0009"** slide fit. Bushing in idler gear is finished for **.0003** to **.0011"** running clearance with the **.3119-.3122"** idler shaft pressed in the housing. Other end of idler shaft accommodates primary pump idler gear. Clearance between gears and the housing is **.002** to **.0045"**. End play, as determined by gaskets under the bearing cage, is **.0015** to **.003"**.

Packing glands have **.0035-.0053"** clearance with primary pump shaft. Removal is accomplished after packing spring nut and spring are removed.

Packing spring nut can be removed after bearing cage unit is separated from the primary pump housing. Hex of nut is **1 3/16"** and nut should be drawn tight against shoulder of bearing cage.

Primary pump shaft is ground and polished to **.3117-.3120"**. Later pumps have a snap ring in a groove on rear end of shaft in place of a pin in a hole to retain the primary pump drive gear. Shaft may be removed after bearing cage is removed and scavenging pump drive gear with its key are removed. Removal of packing spring nut allows later shafts to be removed without possible damage to the packing in the bearing cage. This shaft turns at twice engine speed.

Packing spring is normally **1 3/32"** long and should test **4½** pounds at **3/16"**. It can be removed when packing spring nut is removed.

Pump shaft packing, four or five segments, have a total length of **1 3/32"**. Replace after taking off packing spring, gland, and nut. Rear segment does not have "V" groove on rear side. Ridged side faces "V" groove in packing gland. Lubricate thoroughly before operating pump.

Packing retainer is pressed into the pump housing so that it is **.500-.501"** from the front face of the primary pump housing. Removal requires taking out pump shaft and packing. Unless packing must be replaced do not remove retainer, because removal generally damages the retainer beyond repair. Pushing shaft too far to the rear for snap ring or pin removal will make key for scavenging pump drive gear strike retainer and damage it.

Packing spring and packing gland are identical parts to those used in the bearing cage. Packing is also assembled the same way.

Bearing cage can be removed after taking primary pump drive gear and key from the pump shaft and the **3** screws in the bearing cage. Dowel pins locate bearing cage on primary pump housing. When replacing, be sure gasket does not block any of the holes in the bearing cage or the pump housing. Open holes in assembled bearing cage are for inlet of scavenged fuel oil and for oil from primary pump to operate scavenging valve. Bushing in bearing cage is accurately machined to have **.0005** to **.0013"** clearance with the pump shaft. If replaced, bushing must be line reamed with the bushing replaced in primary pump housing. When primary pump drive gear is removed, pushing pump shaft too far to the rear will allow key in scavenging pump drive gear to damage the packing retainer in the pump housing. Pulling shaft too far to the front will allow key to damage bushing in the bearing cage. When replacing bearing cage with drive gear on shaft, have shaft pushed far enough through the gear so key in shaft is just flush with rear face of gear. This will allow ample room to assemble pin or snap ring to rear end of shaft.

Gauge can be attached to this hole or to the top of the final filter to check opening pressure of bypass valve, it should be **35-40** lbs.

Primary pump pressure gear operates with **.002** to **.004"** backlash with the idler gear. Drive gear is keyed on the shafts using a snap ring retainer. Shafts with pin construction do not use a key in the shaft. Pressure gear is a **.0003** to **.0009"** slide fit on the shaft. Gear can be removed after taking off housing cover, pin or snap ring and sliding gear off the shaft. Shaft will have to be pushed into the housing just far enough to make removal of the pin or snap ring possible. Pushing shaft too far will damage the packing retainer. After taking out key in shafts so equipped and removing screws in the bearing cage, the bearing cage with the shaft can be withdrawn as a unit. Clearance between gears and the housing is **.0015** to **.0025"** and the end play as determined by cover gaskets is **.0015** to **.003"**. Running clearance of idler gear with the **.3119-.3122"** idler shaft is **.0003** to **.0011"**.

Housing cover is held to pump housing with four screws. Covers for pumps with snap rings on the pump shafts have an additional counterbore in the cover. The other counterbore is for the bypass valve spring. Removal of the cover frees the bypass valve spring and valve for inspection and cleaning. Gaskets for the cover are available in **.004** and **.006"** thickness for setting end clearance of gears at **.0015** to **.003"**. Tighten cover screws and mounting screws with hand turning of the screwdriver only, never use a wrench on the screwdriver.

Bypass valve regulates fuel oil pressure on the final fuel filter at **35-40** lbs. Valve seat is not replaceable. If pressure check shows low, remove cover and clean valve and seat of any dirt. Valve spring has a free length of **1-3/16"** and should test **29** lbs. at **3/4"**. Original valve seat is a maximum of **.005"** in width. Angle of the valve is **60°** and the valve seat **64°**. Stem of valve should slide freely in the valve seat.

Fig. 17—Primary and scavenging pump Service Chart.

sure the holes (5) and (7) are clear and the hole (6) in the gasket matches the hole in the pump housing. Assemble the bearing cage unit to the pump housing with the gasket in place, and tighten all three fillister-head machine screws.

The end play of the gears should be .0015" to .003" with the three screws tight. It will be easier to check the end play of gears if a sample assembly is made before assembling the bearing cage packings. The shaft will then slide freely in the bushings and the end play check will be definite. Use either or both the .004" and the .006" thick gaskets to obtain the specified end clearance.

The above end clearance test also applies to the gears of the primary pump. The end clearance here is also .0015" to .003". Use housing cover gaskets of either .004" or .006" thickness. Be sure to draw the four fillister-head machine screws tight when making such checks. Use hand turning of screw driver only; do not use a wrench on the screw driver.

With all end play checks completed, lubricate the scavenging pump gears thoroughly, check alignment of gaskets, and replace the bearing cage assembly on the pump housing. The packing spring nut can now be tightened. Insert the key in the primary pump shaft *(new style shaft)*, push the pressure gear over the shaft, insert the pin or snap ring, and push the shaft back into position.

The end of the shaft pumps with a pin should be .001" to .007" inside the rear surface of the housing. Shafts with the snap ring extend beyond the surface of the housing .0895" to .0985". The idler gear can now be assembled over the idler shaft. Lubricate the bypass valve, insert it in the valve seat, assemble the spring over the valve, and then arrange the gasket and end cover, and tighten the fillister-head machine screws. Turn the screw driver with the hand only; never use a wrench with it. Make the end play check if it has not already been done as outlined in the previous paragraph. The end of the spring rests in the counterbore in the end cover. The pump is ready to be replaced on the injection pump.

Whenever new packing is assembled either in the bearing cage or pump housing it will be difficult to turn the pump shaft at first. For this reason it is good procedure to operate the pump on the test bench for approximately one-half hour before making it operate at high speed on an engine. With all new packing the pump can usually be turned over with only a firm grip on the coupling. Any run made on the test bench should be made with complete fuel connections.

REPLACEMENT

By referring to Figure 11, the replacement of the primary pump assembly on the injection pump is a simple matter. Great care, however, must be exercised in order that the two holes in the bearing cage gasket line up with the two holes in the lower part of the bearing cage and mating holes in the injection pump housing. With both gaskets in place, and long round-head screws through the pump housing, bring the primary pump into position, and turn the injection pump drive flange to make the square end of the governor shaft fit into the square socket of the coupling on the end of the primary pump shaft. Use a screw driver with a wide bit to draw the two round-head (slotted) screws tight. Then check the four fillister-head machine screws holding the cover to the primary pump housing. Tighten screws by turning the screw driver with the hand only; never apply a wrench to the screw driver.

If the primary pump is a factory rebuilt pump, the engine may be operated immediately after all tubing connections are completed. Be sure no dirt has entered the bore of the injection-pump housing while the pump was being replaced. If the primary pump has just been rebuilt it should be attached to an injection pump and operated at slow speed on an injection pump test bench such as SE-1247 for a period of one-half hour.

All fuel connections are to be made and a fuel filter placed in the high-pressure line from the primary pump. At this same time, a gauge in this line will indicate the quality of the rebuilding job and show the functioning of the bypass valve. If the pressure falls below 35 to 40 lbs. at the engine operating speed, dismantle the pump for inspection of dirt in the bypass valve seat. The fuel used for testing purposes should be as clean or cleaner than that used in the tractor or engine fuel tank.

If the injection pump fails to operate properly after installing a new or rebuilt primary pump assembly, it may be well to remove the plunger unit as outlined under that section and inspect the fuel return check valve and spring for faulty operation. If this valve opens at too low a pressure, the primary pump may have difficulty keeping the pressure high enough for full-speed operation.

As explained in the repair section, the bearing cage gasket (round) seals the primary pump pressure to the scavenging valve, while the housing gasket ($\frac{1}{16}$" thick) is squeezed tightly between the injection-pump housing and the primary pump housing to prevent the entrance of any dirt.

When the pump is operating at its normal engine speed, the scavenging pump will discharge between 12 to 15 gallons of fuel per hour. This fuel, as explained in Chapter I, is composed principally of fuel bypassed by the fuel return check valve in the plunger bushing clamp. The normal leakage of high-pressure parts would not furnish enough oil to keep these gears lubricated.

SCAVENGING VALVE UNIT

INDEX

DESCRIPTION AND OPERATION 70
REMOVAL AND DISASSEMBLY 71
REPAIR 75
REASSEMBLY AND REPLACEMENT 77
TEST 77

DESCRIPTION AND OPERATION

The scavenging valve unit is assembled into the lower rear end of the injection pump housing. It is composed of four unit, namely; the scavenging valve tappet and its guide; the scavenging valve with its body, seals and spring; the scavenging valve body cap, and the scavenging strainer. The scavenging strainer is held in the pump housing by the bottom cover, while the scavenging valve body cap holds the entire valve assembly in the injection pump housing. Gaskets and seals are used to prevent leakage within the unit.

As described under the "Primary Pump Unit," the scavenging valve is opened by the pressure developed by the primary pump. When the primary pump is clamped to the injection pump housing, two holes in the bearing cage of the primary pump register with similar holes in the injection pump housing. One hole allows leakage and return fuel to enter the scavenging pump. The other hole connects the high-pressure side of the primary pump to the valve tappet of the scavenging valve.

When the engine starts, the primary pump pressure on the fuel moves the scavenging valve tappet to the outside, moving the scavenging valve with it. This outward movement of the scavenging valve opens a passage through which the leakage fuel enters the scavenging pump. The scavenging valve and valve tappet are returned to their original position by the scavenging valve spring when the engine stops and the primary pump pressure drops. This prevents fuel in the return fuel lines from backing up and diluting oil in the pump sump when the engine is not in operation.

The scavenging valve body has two grooves in which holes are drilled; the grooves not having drilled holes accommodate neoprene seals. When assembled in position, the grooves with the drilled holes match with the drilled holes in the injection pump housing. The holes in the drilled groove farthest from the threaded end of the scavenging valve body are never closed off by the scavenging valve, allowing an open passage for the fuel returning from the fuel return check valve of the plunger unit, to flow into the scavenging pump.

The holes in the drilled groove nearest the threaded end of the scavenging valve body are covered and uncovered by the action of the plunger-type scavenging valve. When the scavenging valve uncovers the holes in the drilled groove nearest the threaded end of the valve body, an open passage is provided for the leakage fuel. Air is drawn through this passage from the air cleaner in the absence of a sufficient amount of leakage and return fuel to satisfy the capacity of the scavenging pump.

All leakage fuel and air flow through the scavenging valve strainer before reaching the scavenging valve.

When the engine is stopped and the scavenging valve is closed by its spring, the head of fuel in the return pipe to the supply tank is prevented from backing up into the injection pump housing.

Faulty operation of the scavenging valve unit can be detected when checking the level of lubricating oil in the sump of the injection pump. Excessive, thinned-out lubricating oil in the sump may indicate the valve is stuck in the open position. Removal of the scavenging valve cap will show the end of the valve protruding beyond the threaded end of the scavenging valve body. Remove the valve body, clean thoroughly, and replace. If the valve is not protruding and dilution continues, the neoprene seals may be leaking or the scavenging valve tappet may be stuck in its guide. The test for leakage is given in detail at the end of this chapter.

Some injection pumps have a different type scavenging valve body and seal as shown in the lower portion of Figure 18. These can be recognized by the larger scavenging valve body cap on the outside of the housing. The operation of both is identical. This change is incorporated for ease of reassembly and for increased durability of the neoprene seals.

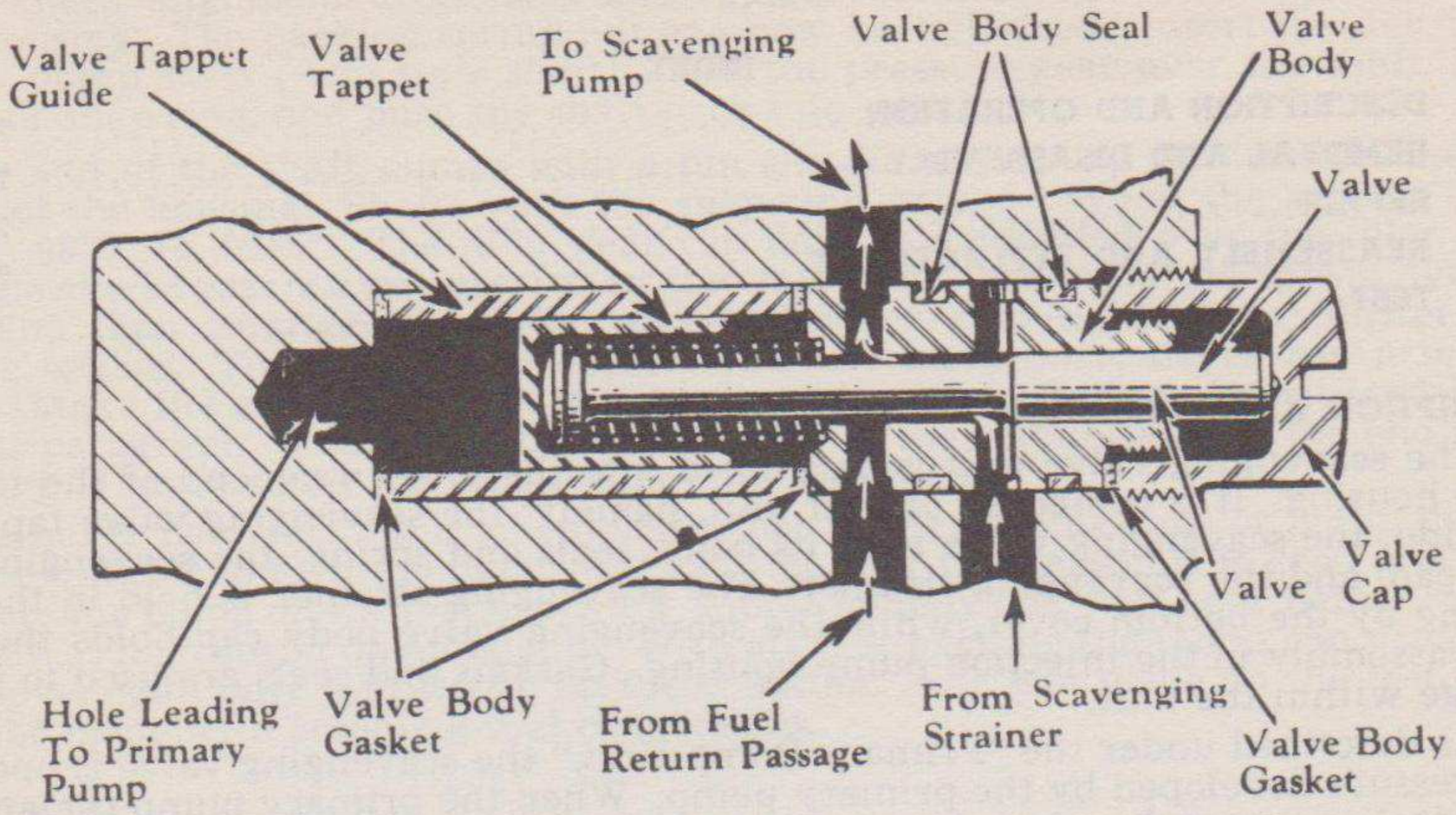

DOUBLE SEAL TYPE

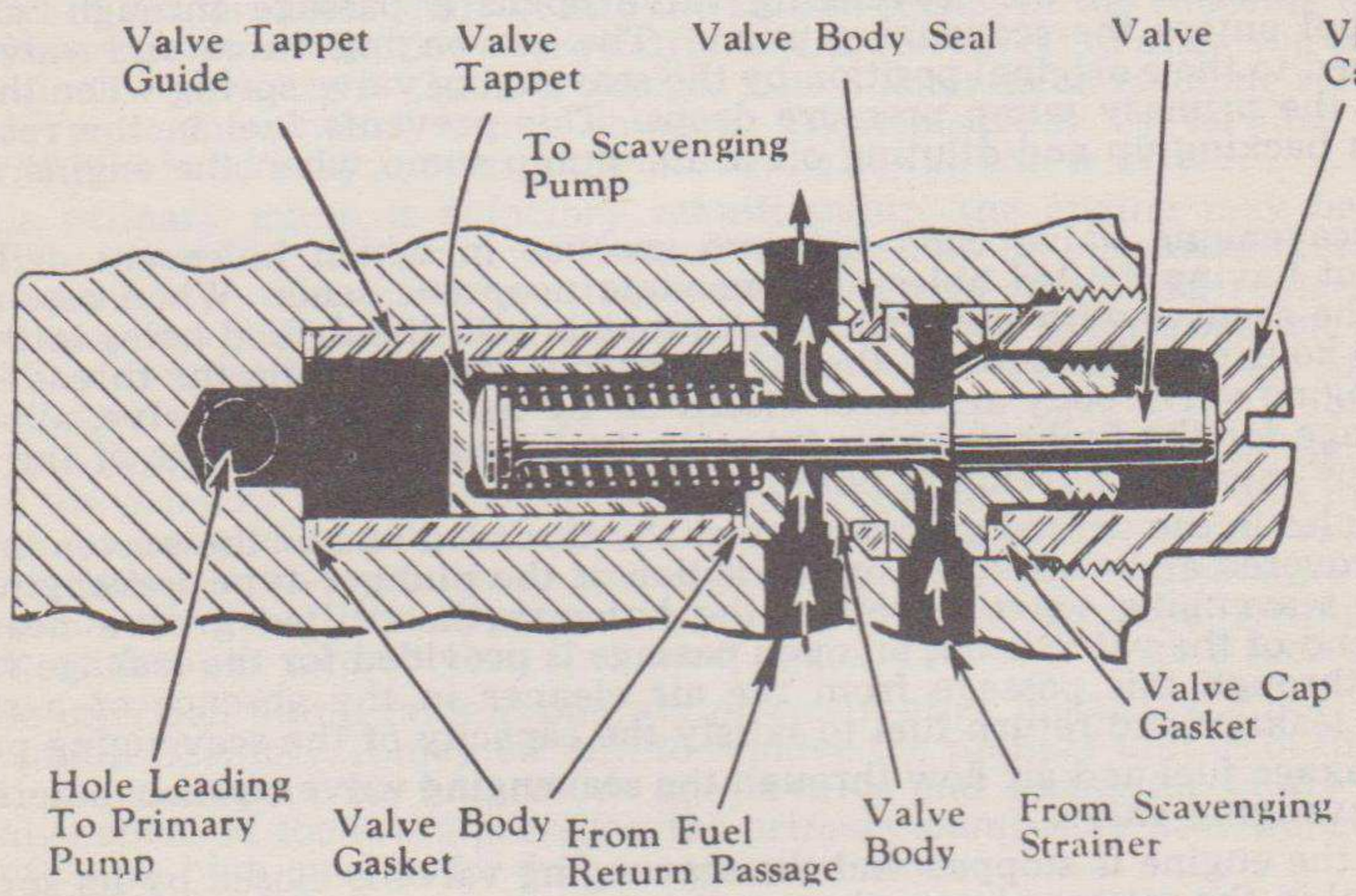

SINGLE SEAL TYPE

Fig. 18—Cross-section view of scavenging valve assemblies.

REMOVAL AND DISASSEMBLY

Both styles of scavenging valves may be quickly removed, using a screw driver, a service tool, and a wrench. The scavenging valve should only be removed because of faulty operation or during a complete overhauling and general cleaning of the entire injection pump.

Using a wide-bit screw driver, the scavenging valve cap may be removed as indicated in Figure 19. The primary pump is shown removed in this illustration. It is not necessary to do so, although, if all passages are to be cleaned it is an advisable part of the procedure. It is not necessary to even remove the injection pump from the engine to accomplish repair of this unit—but be sure external parts of the pump are thoroughly cleaned before proceeding.

Next assemble the service tool, (see sketch), to the threaded end of the scavenging valve body. Turn the "T" handle of the tool until it just bottoms against the body of the valve, then run the nut against the sleeve, hold the "T" handle in one position, and apply an open-end wrench to the nut to withdraw the valve body from the injection pump housing as shown in Figure 20. When the body is loosened, it may be withdrawn with the "T" handle.

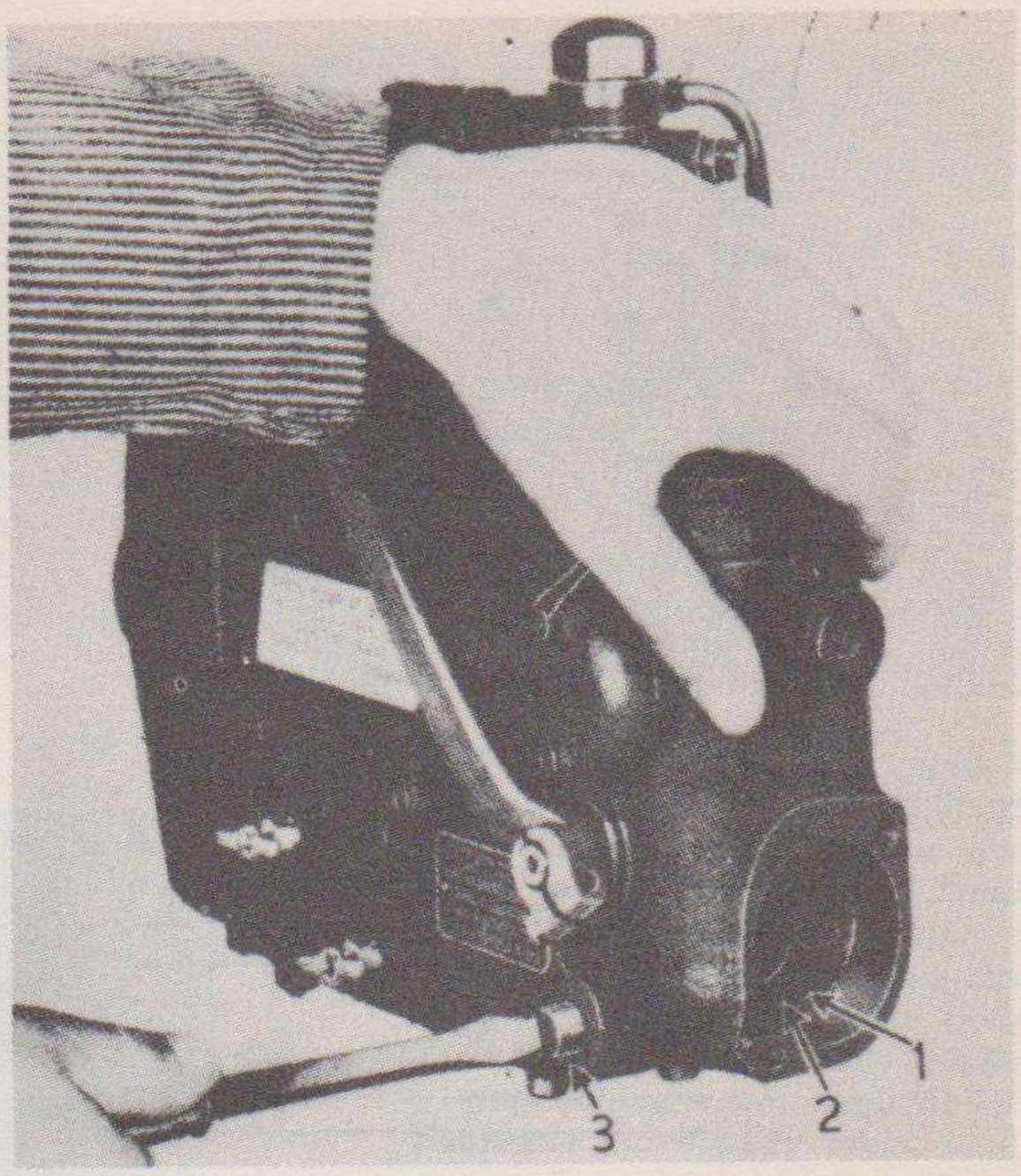

Fig. 19—Removing scavenging valve cap. (1) Passage for primary pump fuel oil to actuate scavenging valve. (2) Outlet passage from scavenging valve. (3) Scavenging valve cap.

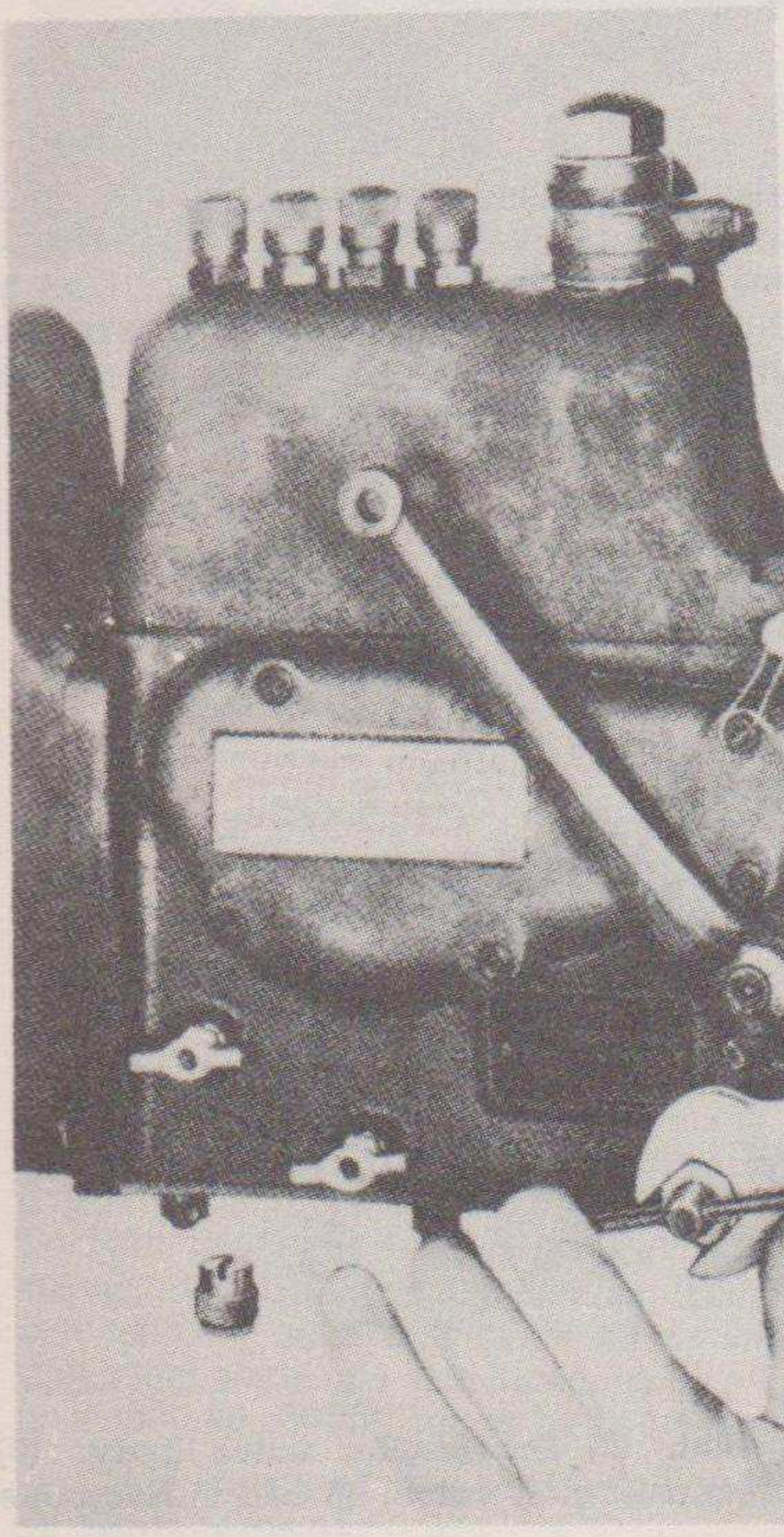

Fig. 20 — Using special tool to remove scavenging valve body.

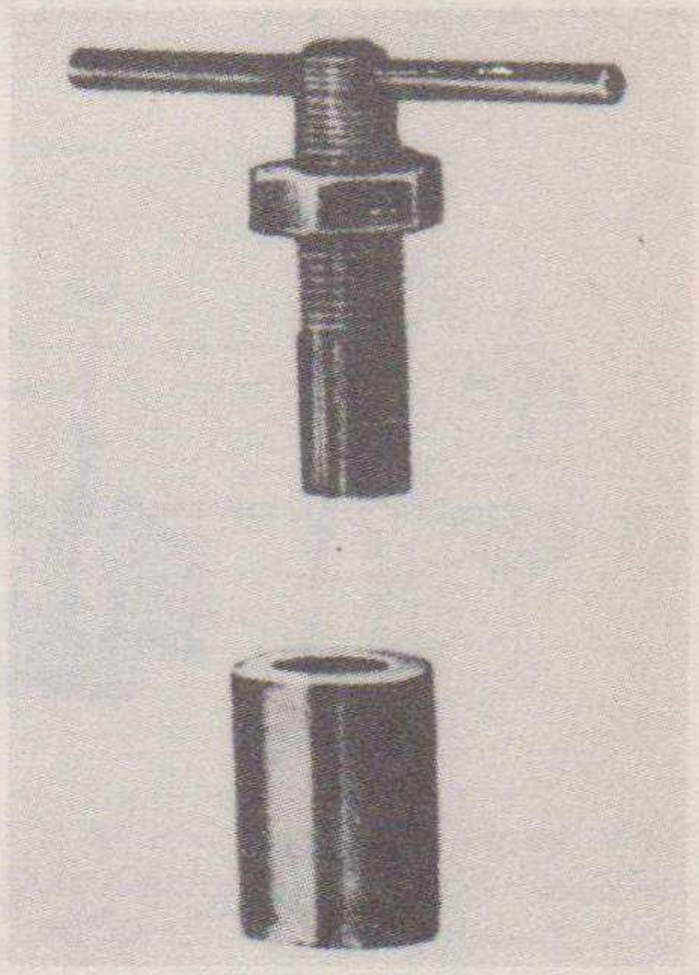

Fig. 21—Scavenging valve body-puller.

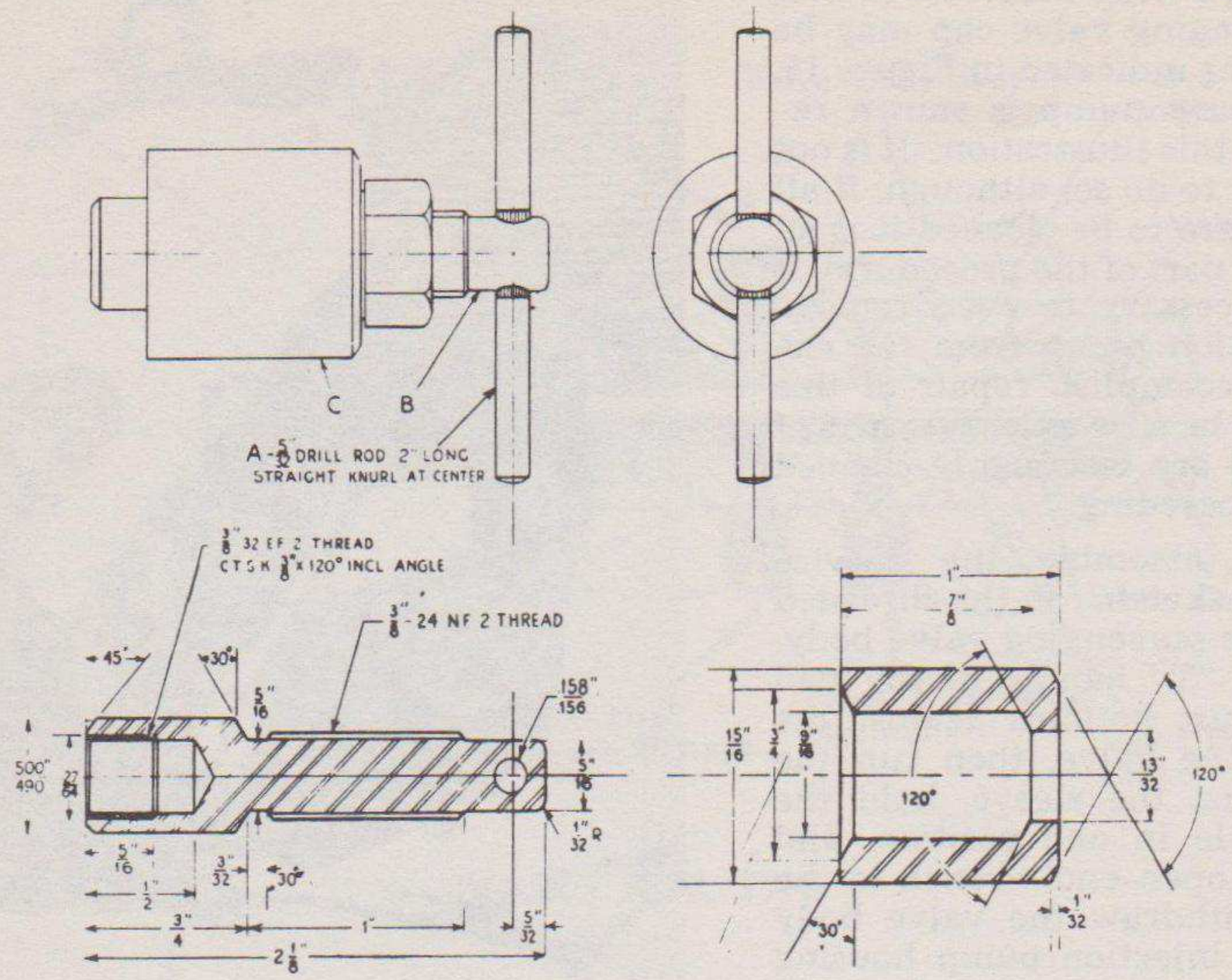

Fig. 22—Dimensions for making scavenging valve body-puller.

Figure 23 shows the double-seal scavenging valve body assembly as it is removed with the service tool. The gaskets (1) and (3), together with valve body (2) (including neoprene body seals), the valve spring (4), and the valve (5) all come out as a unit. Occasionally the gasket (3) will remain in the injection pump housing. Figure 24 shows both constructions side by side with the neoprene body seals set to the side in the grooves into which they are assembled.

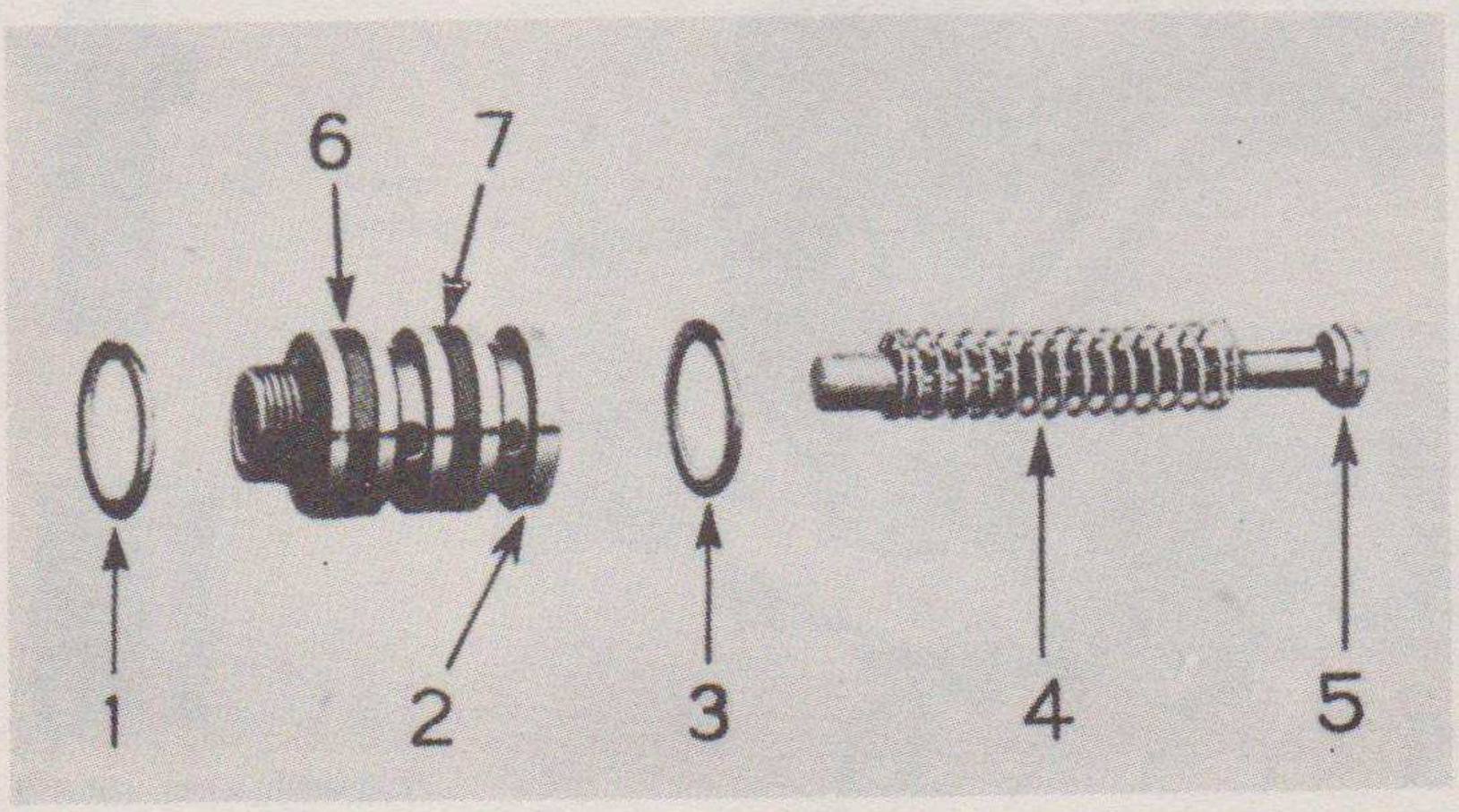

Fig. 23—Scavenging valve and body. (1) Valve body gasket. (2) Scavenging valve body. (3) Valve body gasket. (4) Scavenging valve spring. (5) Scavenging valve. (6 and 7) Neoprene valve body seals.

By using a ¼" diameter brass rod, the scavenging valve tappet (4), valve tappet guide (3), and the inner valve body gasket (2) can be withdrawn from the pump housing (1), Figure 25. Tipping the pump on its side may eliminate the use of any rod to remove these parts.

Because of the lacquers and gums frequently found in Diesel fuel, the valve tappet guide (2) may be stuck in the bore in the pump housing. In such cases, a tool similar to that sketched (Figure 26) may be used to remove it without damaging the part.

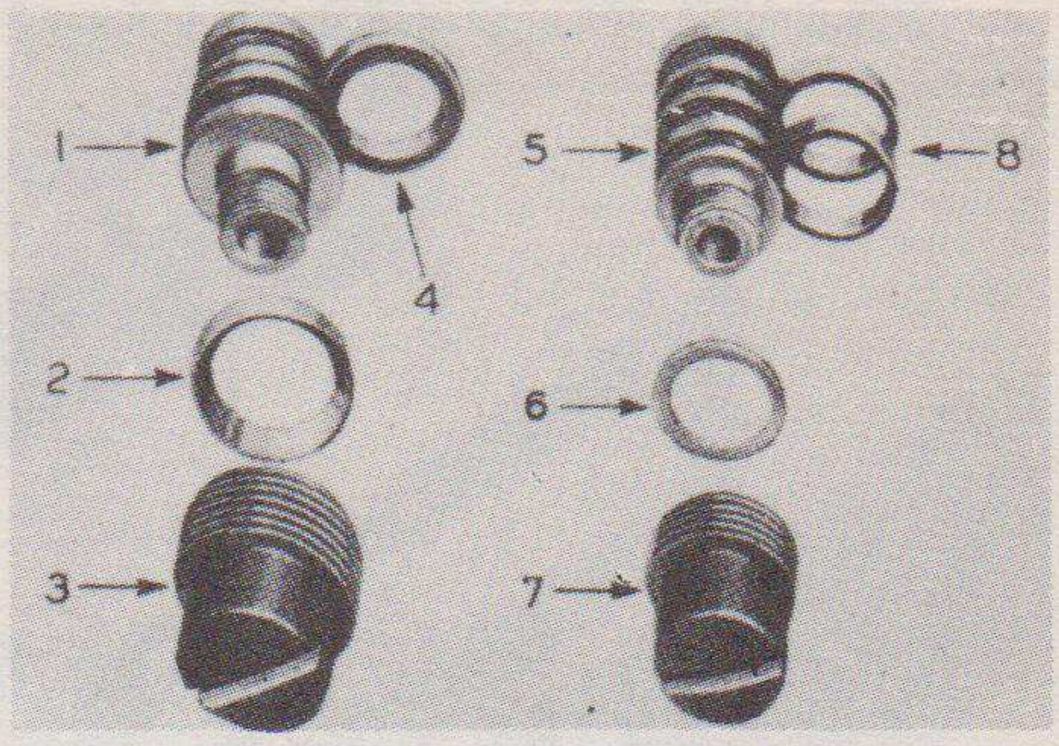

Fig. 24—Single and double seal types of scavenging valve bodies. (1) Single seal valve body. (2) Single seal valve body cap gasket. (3) Single seal scavenging valve cap. (4) Single seal valve body Neoprene seal. (5) Scavenging valve body. (6) Scavenging valve body gasket. (7) Scavenging valve cap. (8) Two Neoprene valve body seals.

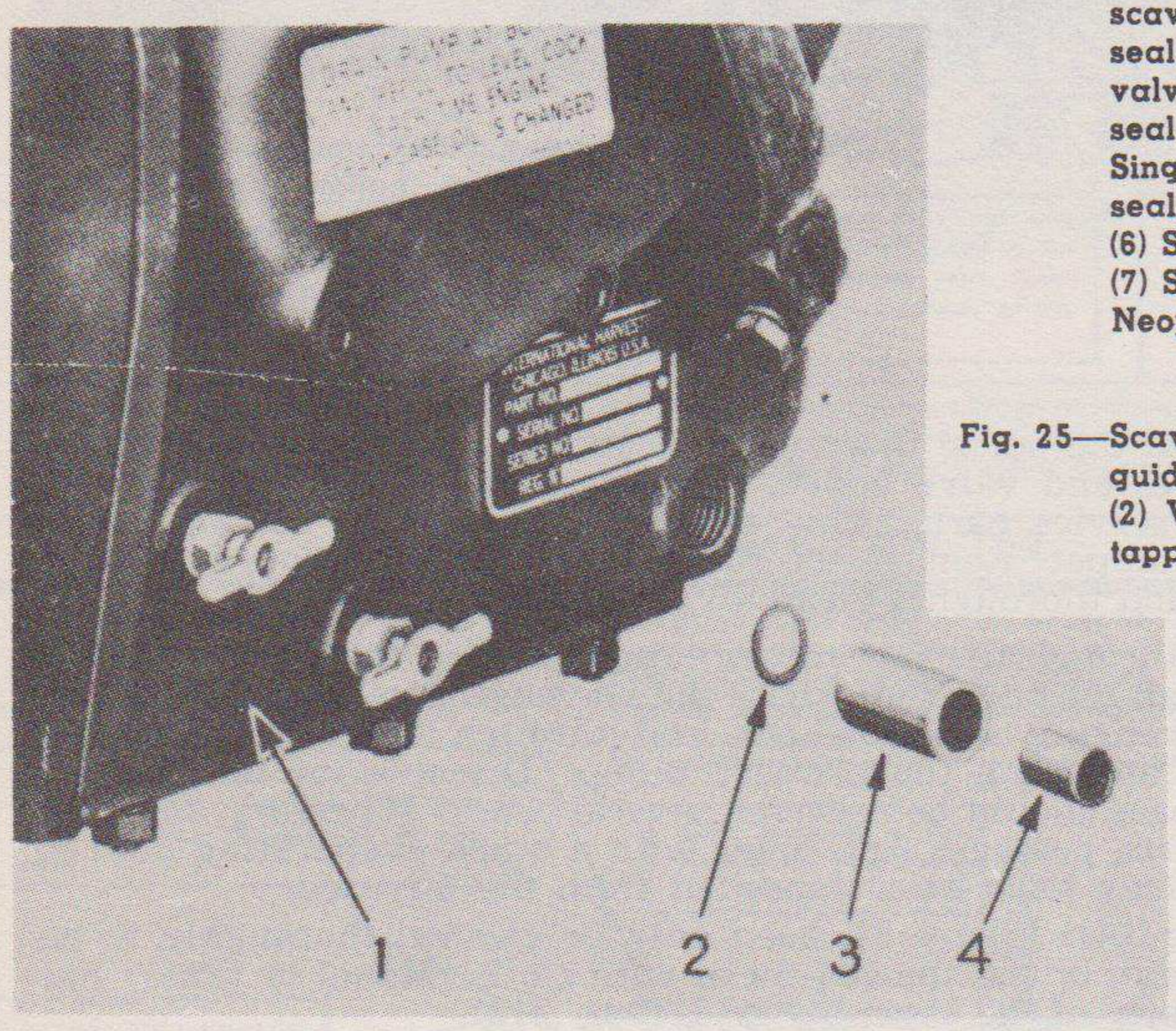

Fig. 25—Scavenging valve tappet and guide. (1) Injection pump housing. (2) Valve body gasket. (3) Valve tappet guide. (4) Valve tappet.

Fig. 26—Special tool for removing stuck valve tappet guide. Assemble and tap into guide. Then pull out.

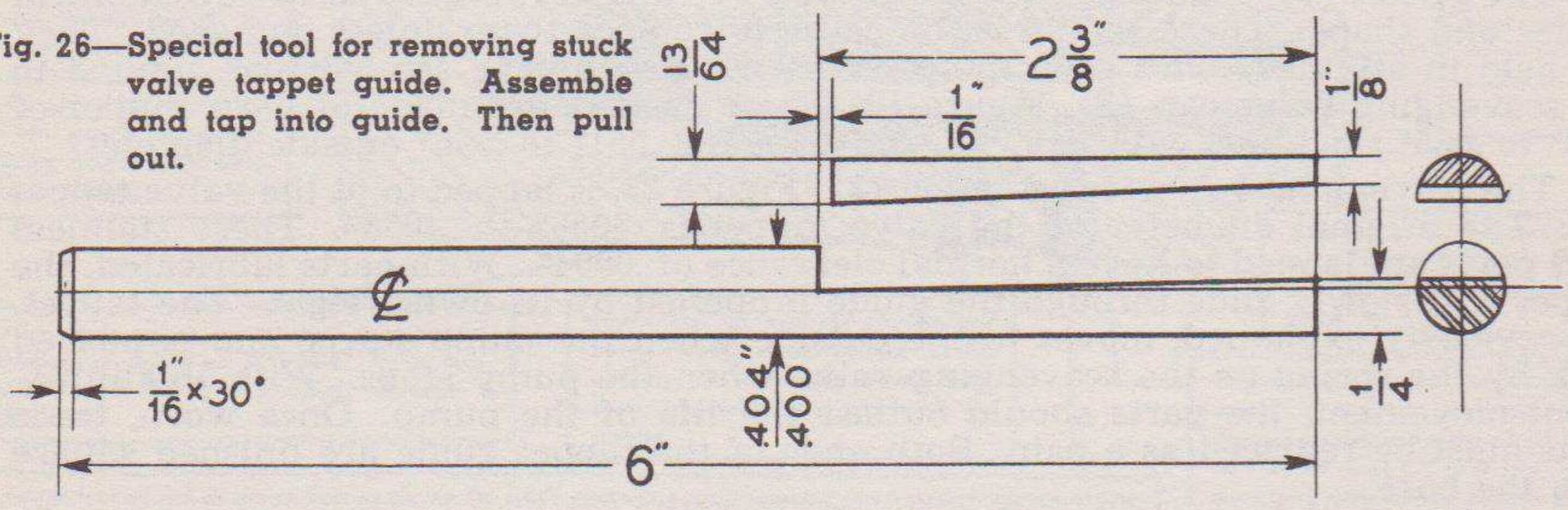

Another item in the scavenging valve system is the scavenging strainer (4), Figure 27 With the lubricating oil drained from the pump housing, the pump housing bottom plate (1) with gasket (2) can be removed. The studs (3) are replaced with capscrews on some pumps. The capscrew style uses special copper washers. The scavenging strainer may be pulled from the housing with any small hooked object inserted through the hole in the base of the strainer. The top flange of the strainer is .0005" to .0025" loose in the housing; some may drop out of their own weight.

All items of the scavenging system are now ready for cleaning, inspection, repair or replacement.

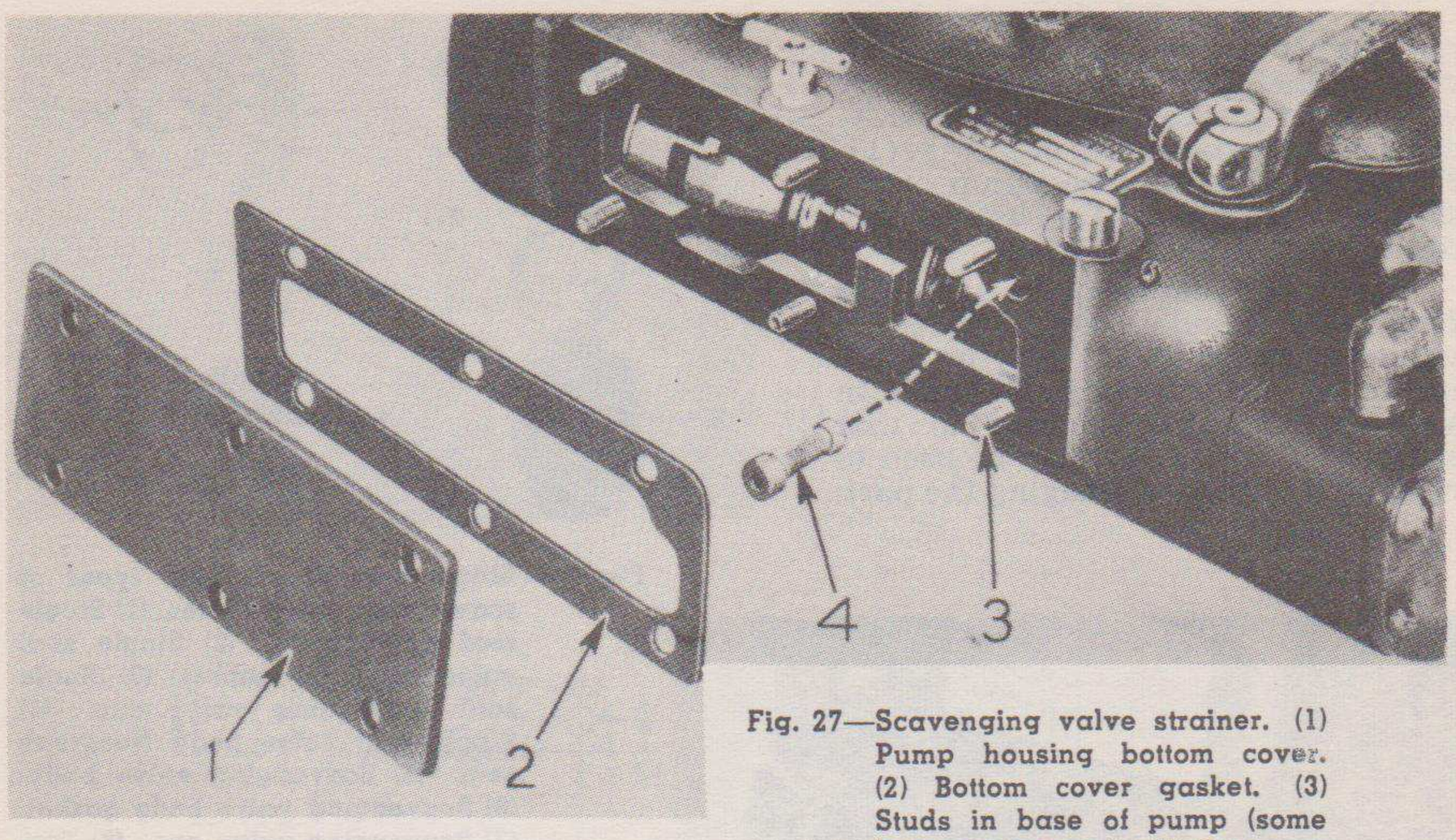

Fig. 27—Scavenging valve strainer. (1) Pump housing bottom cover. (2) Bottom cover gasket. (3) Studs in base of pump (some have capscrews). (4) Scavenging valve strainer.

REPAIR

Before inspecting any of the parts, thoroughly clean them all, using a good solvent. The scavenging valves and valve bodies are lapped to one another and are furnished only in pairs as service parts. This same condition exists for the valve tappet guide and the valve tappet. Remove the fuel return pipe (2), Figure 30, from the outside of the housing and thoroughly clean all passages.

Dry air may be blown through the fuel return tapped hole in the pump housing. Air can also be blown through the hole from where the scavenging valve assembly was removed, through the scavenging strainer hole, and through the two holes (1), Figure 19, in the bore for mounting the primary pump. Direction of blowing air through the holes and passages should be reversed several times. When dry air is not available, flush all these parts, passages, and holes with a quick evaporating fluid to remove any moisture that may have been deposited from the air used.

The scavenging strainer (4), Figure 27, need only be cleaned thoroughly to be made suitable for replacement, unless the 200-mesh wire cloth (Monel or brass) has deteriorated. The top diameter of the assembly is .311" to .312".

The gasket (2), Figure 25, and the gaskets (1) and (3), Figure 23, are all identical in size and shape. There should be no cause to replace them unless damaged. They are held in assembly with only the pressure exerted by the screwdriver applied to the scavenging valve cap (3), Figure 19. These gaskets are made of hard copper of .032" to .035" thickness with .416" to .421" bore and .551" to .556" outside diameter.

The scavenging valve tappet guide (3), Figure 25, is lapped to fit the valve tappet (4). The original diameter of the valve tappet is .4056" to .4058". These stainless steel parts are lapped to have a normal clearance of .0004". With parts lubricated, the tappet will slowly slide through the guide propelled by its own weight. The tappet, as previously explained, moves to the outside when the pump starts, and is pushed back by the spring on the scavenging valve when the pump stops. With this infrequent movement, the parts should outlast the life of the pump. Once worn, these parts must be replaced as a pair. Both ends of the tappet guide are finished square with the bore.

The scavenging valve spring (4), Figure 23, has a free length of $1\frac{9}{64}$" and should test 1.8 lbs. at ¾". It should never need replacement. If it fails to check against these specifications it should be replaced with one that does.

The scavenging valve body (2), Figure 23, and the scavenging valve (5) are lapped together in manufacture and as such are not furnished individually as service parts. When the engine is stopped, the spring makes the valve cover the ports in the valve body. When the engine is operating, the valve contacts the valve cap (3), Figure 19, and allows oil to circulate from one port to the other. With this limited movement, there should be no wear on these parts. The nominal diameter of the

SCAVENGING VALVE UNIT SERVICE CHART

If valve tappet guide is stuck in the bore because of gums in the fuel oil, a special puller will have to be used to remove it.

Return fuel oil from the plunger unit, leakage fuel oil from plunger and distributor units, and air drawn through air cleaner pass through this opening to the scavenging pump. Scavenging valve never closes off this passage.

Two neoprene seals in valve body should be dry and free of oil when assembled. Outside surface is flat when properly assembled and seated in grooves not having drilled holes. Seals assembled inside out will have slightly curved outer surface.

Valve tappet is a lapped fit in valve tappet guide. It should slide through the guide when lubricated, propelled by its own weight.

Valve spring has a free length of **1 9/64"** and should test **1.8** lbs. at **3/4."**

Valve body with seals can be removed after removing valve cap and applying special tool to threaded end. Valve and spring come out with the valve body. Body and valve are furnished only in pairs; they are lapped to fit one another.

Fuel oil under pressure developed by the primary pump travels through injection pump housing to valve tappet, moving tappet and valve to open position when engine is running. Spring returns valve when pressure drops.

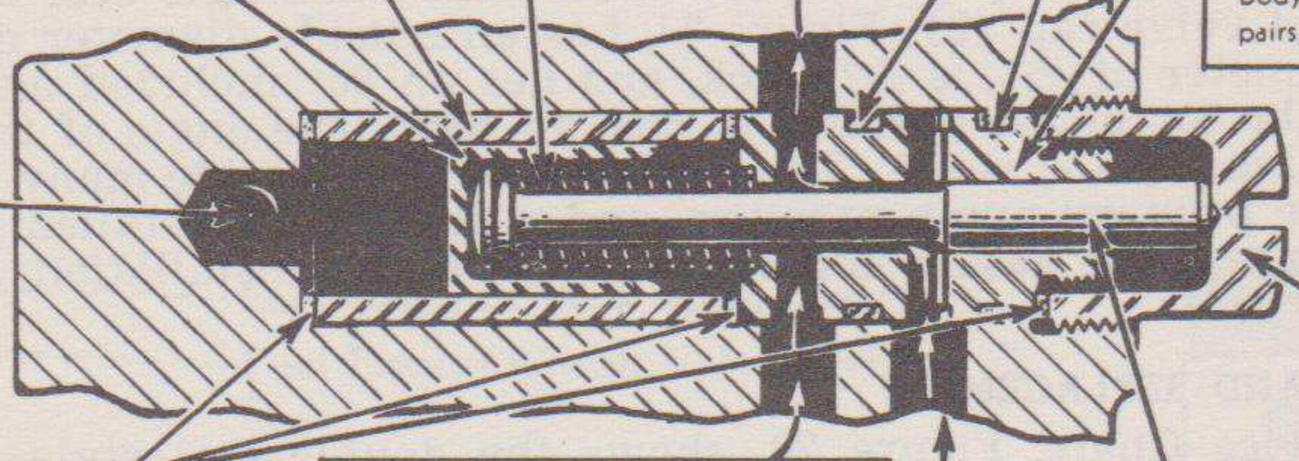

Tighten valve cap with hand turning of screwdriver only; never apply a wrench to the screwdriver.

Valve body gaskets are made of hard copper. Thickness of gaskets are **.032-.035"**, inside diameter is **.416-.421"**, and outside diameter is **.551-.556"**.

Return fuel oil from the plunger unit travels through closed passages to this opening in scavenging valve body. Scavenging valve never closes off this passage.

If scavenging valve is in the position shown when engine is stopped, valve or tappet is stuck. Remove assembly and clean. Leakage of valve can be checked using a **6** or **8** foot head of fuel on scavenging pump outlet. Remove scavenging valve strainer in base of housing and observe for leakage. Faulty installation of neoprene seals can also cause leakage.

Leakage fuel oil and air drawn from air cleaner (to satisfy scavenging pump capacity) passes through the scavenging strainer and to this opening in the valve body. When valve is open, as shown, fuel and air pass along the valve stem to the opening leading to the scavenging pump. When valve is closed and engine is stopped return fuel in pipes to supply tank is prevented from backing up into pump housing.

DOUBLE SEAL TYPE

If valve tappet guide is stuck in the bore because of gums in the fuel oil, a special puller will have to be used to remove it.

Return fuel oil from the plunger unit, leakage fuel oil from plunger and distributor units, and air drawn through air cleaner pass through this opening to the scavenging pump. Scavenging valve never closes off this passage.

The one seal in the central groove of the valve body should have a flat outer surface when assembled. Both body and seal should be dry and free of oil when doing so. Seal assembled inside out will have a slightly curved outer surface.

Valve tappet is a lapped fit in valve tappet guide. It should slide through the guide when lubricated, propelled by its own weight.

Valve spring has a free length of **1 9/64"** and should test **1.8** lbs. at **3/4."**

Valve body with seals can be removed after removing valve cap and applying special tool to threaded end. Valve and spring come out with the valve body. Body and valve are furnished only in pairs; they are lapped to fit one another.

Fuel oil under pressure developed by the primary pump travels through injection pump housing to valve tappet, moving tappet and valve to open position when engine is running Spring returns valve when pressure drops.

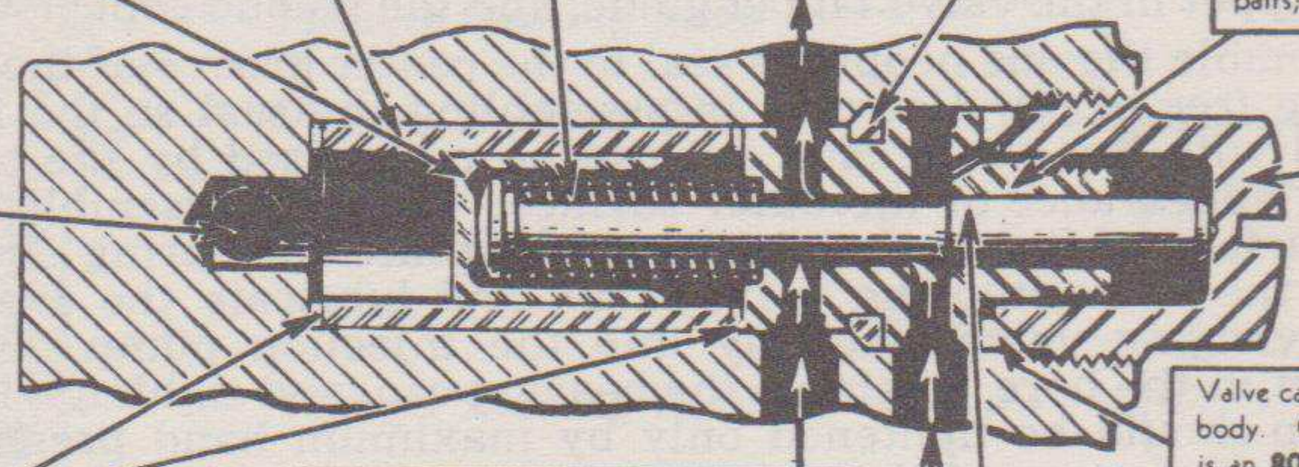

Tighten valve cap with hand turning of screwdriver only; never apply a wrench to the screwdriver.

Valve cap gasket is removed with the valve body. Chamfer on inside of copper gasket is an **80°** included angle while the angle on the cap is **90°**.

Valve body gaskets are made of hard copper. Thickness of gaskets are **.032-.035"**, inside diameter is **.416-.421"**, and outside diameter is **.551-.556"**.

Return fuel oil from the plunger unit travels through closed passage: to this opening in scavenging valve body. Scavenging valve never closes off this passage.

If scavenging valve is in the position shown when engine is stopped, valve or tappet is stuck. Remove assembly and clean. Leakage of valve can be checked using a **6** or **8** foot head of fuel on scavenging pump outlet. Remove scavenging valve strainer in base of housing and observe for leakage. Faulty installation of neoprene seals can also cause leakage.

Leakage fuel oil and air drawn from air cleaner (to satisfy scavenging pump capacity) passes through the scavenging strainer and to this opening in the valve body. When valve is open, as shown, fuel and air pass along the valve stem to the opening leading to the scavenging pump. When valve is closed and engine is stopped return fuel in pipes to supply tank is prevented from backing up into pump housing.

SINGLE SEAL TYPE

Fig. 28—Scavenging valve unit Service Chart.

stainless steel valve and the bore in the valve body is .1875". There is no measurable clearance between the valve and the valve body—that is, the finish of these two parts is similar to that of the plunger and its bushing. If these parts are worn, or the valve is stuck in an open position, the pump may be flooded by fuel backing up from the tank through the fuel return line when the engine is stopped.

The valves in both styles of valve bodies (1) and (5), Figure 24, are identical except they are lapped to fit the individual valve body. The style using only one neoprene seal cannot be installed in pumps originally equipped with the double-seal style. The early double-seal valve bodies as shown in the cross sectional view in Figure 18 have been improved by the addition of a 45° chamfer (.025" wide) to the outer edge of the neoprene seal grooves. If this chamfer is to be added to a body not so machined, it will be necessary to grind the chamfer.

The copper valve cap gasket (2) used with the single seal construction valve body (1), and valve cap (3), Figure 24, has an outside diameter of .6855" to .6865", an inside diameter of ½", is $\frac{1}{64}$" thick, and has an 80° included angle chamfer. The diameter at the top of the chamfer is .625" to .630". The angle of the chamfer on the end of the valve cap (3) is 45°. This gasket should be usable many times. The gasket must hold the primary pump pressure, and will do so if installed properly while in good condition. If the gasket is damaged from faulty installation, a new one should be used.

REASSEMBLY AND REPLACEMENT

The Service Chart, Figure 28, shows the double-seal style scavenging valve assembly. Each item should be replaced exactly as shown. First insert the .032" to .035" valve body gasket into the injection pump housing, followed by the well lubricated valve tappet in the valve tappet guide, and the second copper valve body gasket.

Next assemble neoprene seals to the valve body when both parts are free of oil. Use care in assembling the two seals in the grooves not having holes leading to the center of the body. Be sure the seals are right side out; seals with wrong side out can be recognized by the slightly hollowed-out appearance of the outer surface. Properly assembled seals are flat on their outer surface. After assembling neoprene seals, insert spring over scavenging valve, slide the scavenging valve into the body and lubricate all parts of the assembly. Carefully push the scavenging valve assembly into the injection pump housing, being sure not to turn over the edge of the neoprene seal. The third gasket and valve cap can now be assembled and tightened with a screw driver. The valve cap should be tightened only by maximum hand pressure on the screw driver because distortion of the scavenging valve assembly will result if the valve cap is tightened too much by other means. Do not use a wrench on the screw driver.

The Service Chart, Figure 28, also shows the single-seal style scavenging valve assembly. Each item should be replaced exactly as shown. First insert the .032" to .035" valve body gasket into the injection pump housing, followed by the well lubricated valve tappet in the valve tappet guide, and the second copper valve body gasket.

Next assemble the one neoprene seal to the center groove of the valve body when both parts are free of oil. Use care in assembling the seal so the right side will be out. The seal with the wrong side out can be recognized by the slightly curved or hollowed-out appearance of the outer surface. Properly assembled seals are flat on their outer surface. After assembling the seal, place the spring over the scavenging valve, insert the valve into the valve body, and lubricate the assembly. Carefully push the scavenging valve assembly into the injection pump housing. Place the tapered gasket in the bore, assemble the bearing cap, and tighten with a screw driver. The valve cap should be tightened only by maximum hand pressure on the screw driver because distortion of the scavenging valve assembly will result if the valve cap is tightened too much by other means.

TEST

Whenever the scavenging valve assembly has been removed for inspection, or any other reason, a check should be made after it has been reinstalled to be certain no leakage takes place through this assembly.

The easiest way to make this check is with the pump completely assembled. Install a small tank 6 or 8 ft. above the primary pump and connect this tank with a regular fuel line to the scavenging pump outlet. Remove the bottom plate from the pump, and the screen from the leakage passage, fill the tank with fuel, and watch for any leakage of fuel through the opening at the bottom of the pump from where the screen was removed.

If leakage occurs, the scavenging valve is stuck or seals or gaskets are not sealing effectively.

PLUNGER UNIT

INDEX

DESCRIPTION AND OPERATION 79
REMOVAL 82
DISASSEMBLY 83
REPAIR 90
REASSEMBLY 94
REPLACEMENT 95
ADJUSTMENT 98

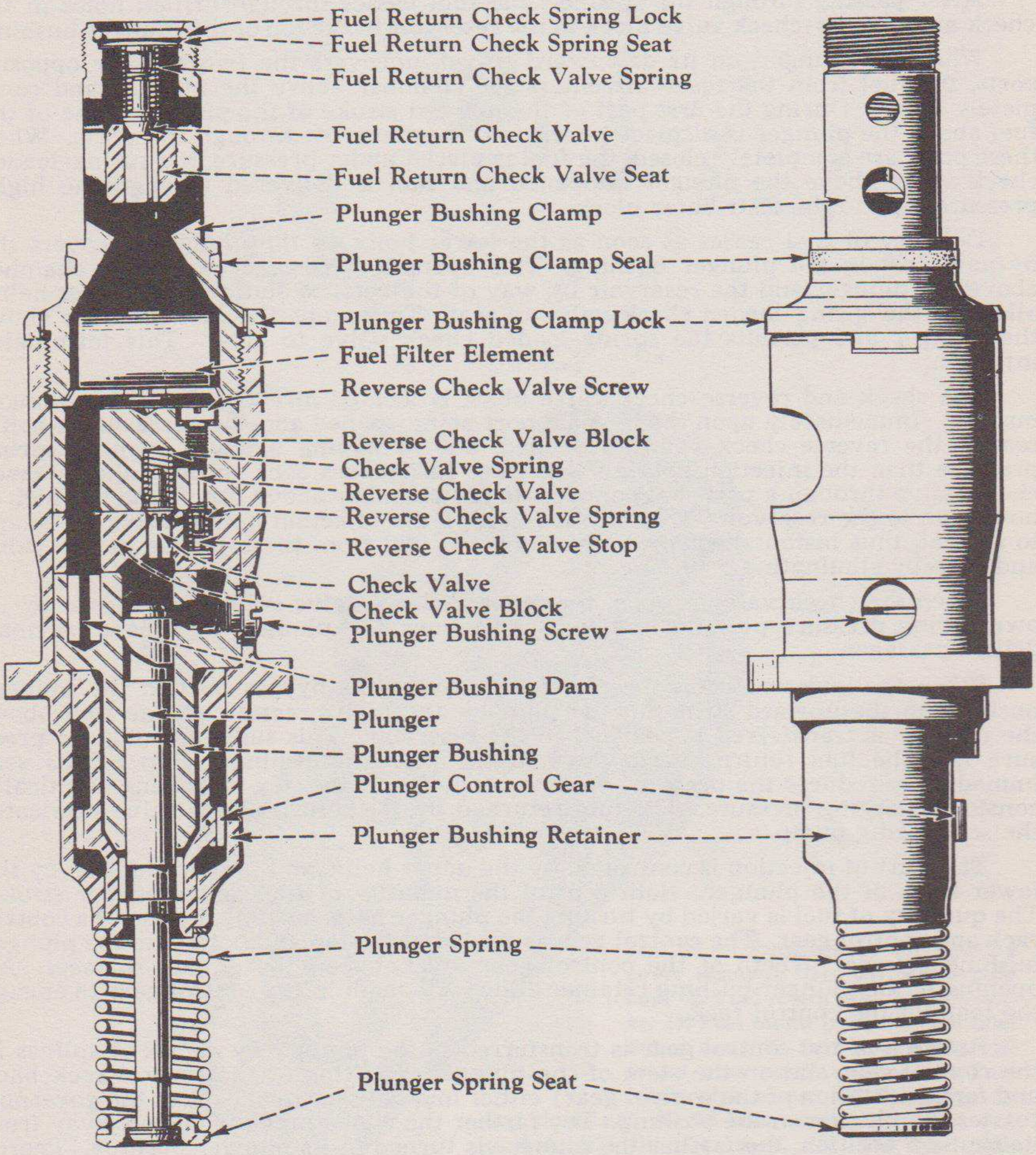

Fig. 29—Cross-section of plunger unit.

DESCRIPTION AND OPERATION

Injection of fuel into the engine is accomplished by a single plunger unit. A distributor unit determines which of the four cylinders receives the Diesel fuel injected.

The single plunger unit is self-contained. It may be quickly replaced without interfering with any of the working parts of the entire injection pump. Each plunger unit is composed of six separate items. These are: (1) plunger and bushing, (2) plunger spring and seat, (3) plunger control gear, (4) check and reverse-check valve block, (5) fuel strainer, and (6) bushing clamp and fuel return check valve. The plunger bushing retainer houses the major portion of these items. Reciprocal motion of the plunger is accomplished by means of a single eccentric cam and a return spring.

Diesel fuel from the final fuel filter enters the plunger bushing clamp below the fuel return check valve and passes down through the fuel strainer under pressure. This strainer is an added precaution to remove any dirt present in the fuel line between the final fuel filter and the plunger unit. Be sure this pipe and its fittings are absolutely clean when replacing a pump on the engine.

After passing through the strainer, the fuel passes through drilled holes in the check and reverse-check valve block to the reservoir in the top of the plunger bushing.

When the plunger, on its downward travel, uncovers the two radially opposite ports, the fuel from the reservoir enters the chamber above the plunger and completely fills it. During the first part of the upward stroke of the plunger some of the fuel above the plunger is displaced back into the reservoir through the ports. When these ports are completely closed, the fuel is placed under pressure, the spring-loaded check valve above the plunger is opened and fuel is delivered through the high-pressure pipe to the distributor block.

Delivery of fuel ceases as soon as the lower helix on the plunger uncovers the by-pass port in the plunger bushing. This opens a passage between the chamber above the plunger and the reservoir by way of the vertical slot and the lower helix, allowing the spring-loaded check valve to seat. This drops the fuel pressure above the plunger and permits the spring-loaded check valve to close. This terminates injection.

The check and reverse-check valve block is located directly above the plunger bushing. Immediately upon the by-pass port being opened and the check valve being seated, the reverse-check valve is opened, due to having a lower opening spring pressure than the injection nozzle valve. The fuel passes back through the reverse-check valve through a port that connects to the chamber above the plunger, which is now open to the reservoir. This, in turn, allows the injection nozzle valve to "snap" to its seat, thus instantaneously terminating the fuel from the injection nozzle valve and thereby eliminating dribbling.

When the check valve is open, the reverse-check valve is held on its seat by its own spring pressure plus the fuel pressure above the plunger by means of small drilled passages.

When the lower helix of the plunger uncovers the bypass port in the plunger bushing on the upward stroke of the plunger, the high pressure on the fuel above the plunger is transferred to the fuel in the reservoir. This sudden change in pressure lifts the fuel return check valve in the plunger bushing clamp off its seat immediately reduces the pressure back to normal, and thereby maintains practically constant charging pressure. The fuel returned by the return check valve lubricates the scavenging pump.

The start of injection is controlled by the upper helix, and the termination by the lower helix of the plunger. Both control the quantity of fuel delivered per stroke. The quantity of fuel is varied by turning the plunger in its bushing, by use of a control rack and control gear. The control gear is guided at the top and bottom in the plunger bushing retainer. Teeth of the control gear are between the guided surfaces. An opening in the plunger bushing retainer allows the teeth in the control gear to engage the teeth of the control rack.

Rotation of the control gear is transferred to the plunger by means of splines in the control gear and on the stem of the plunger. Shifting of the control rack back and forth, (rotation of the control gear) either manually or by means of the governor, rotates the plunger in the bushing. The farther the control rack is moved away from its shut-off position, the farther the plunger is turned in its plunger bushing. Therefore the later the lower helix uncovers the by-pass port, the greater the fuel delivery per stroke will be.

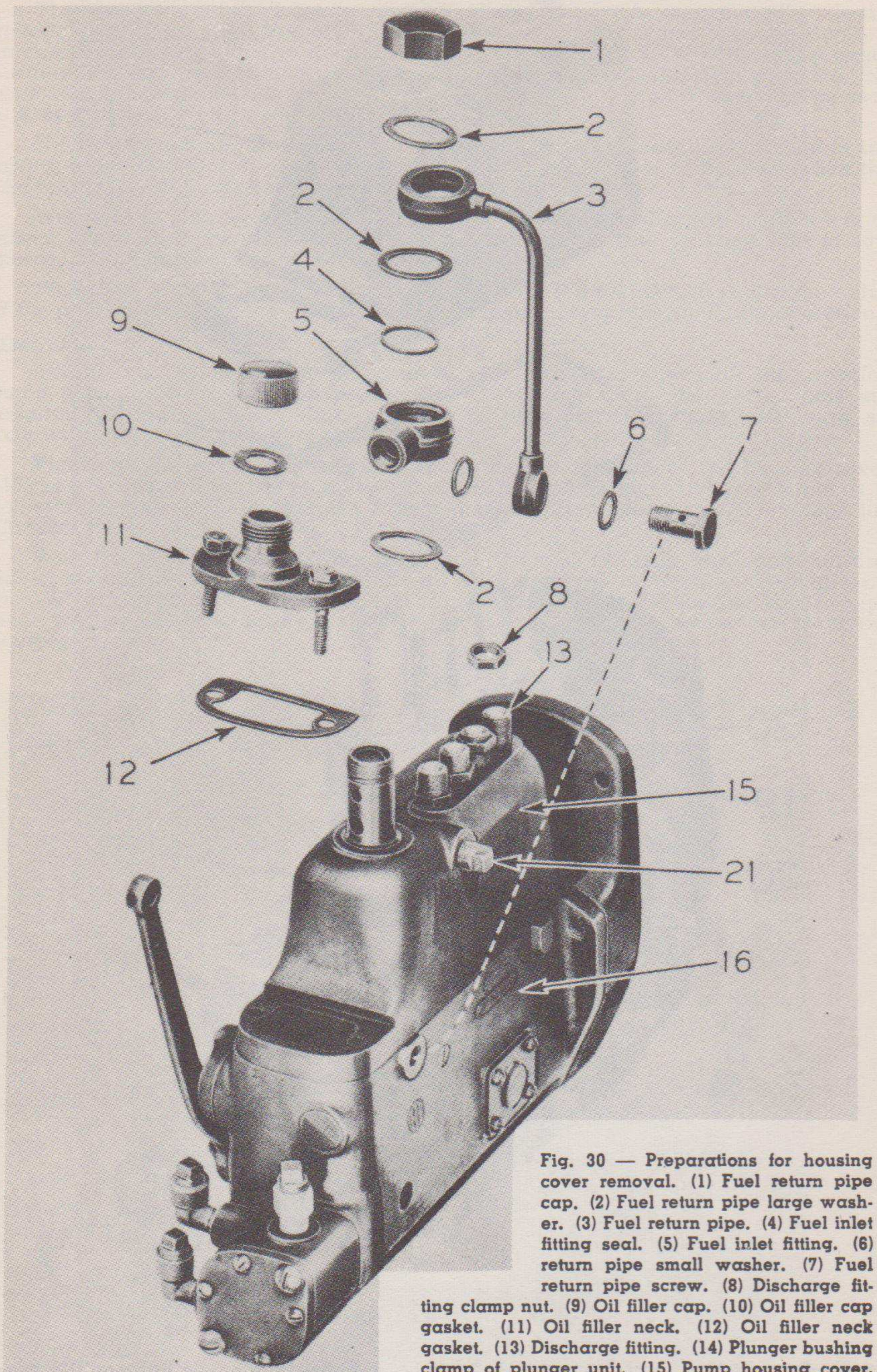

Fig. 30 — Preparations for housing cover removal. (1) Fuel return pipe cap. (2) Fuel return pipe large washer. (3) Fuel return pipe. (4) Fuel inlet fitting seal. (5) Fuel inlet fitting. (6) return pipe small washer. (7) Fuel return pipe screw. (8) Discharge fitting clamp nut. (9) Oil filler cap. (10) Oil filler cap gasket. (11) Oil filler neck. (12) Oil filler neck gasket. (13) Discharge fitting. (14) Plunger bushing clamp of plunger unit. (15) Pump housing cover. (16) Pump housing. (21) Plug. Assemble breather tube elbow before assembling pump to the engine.

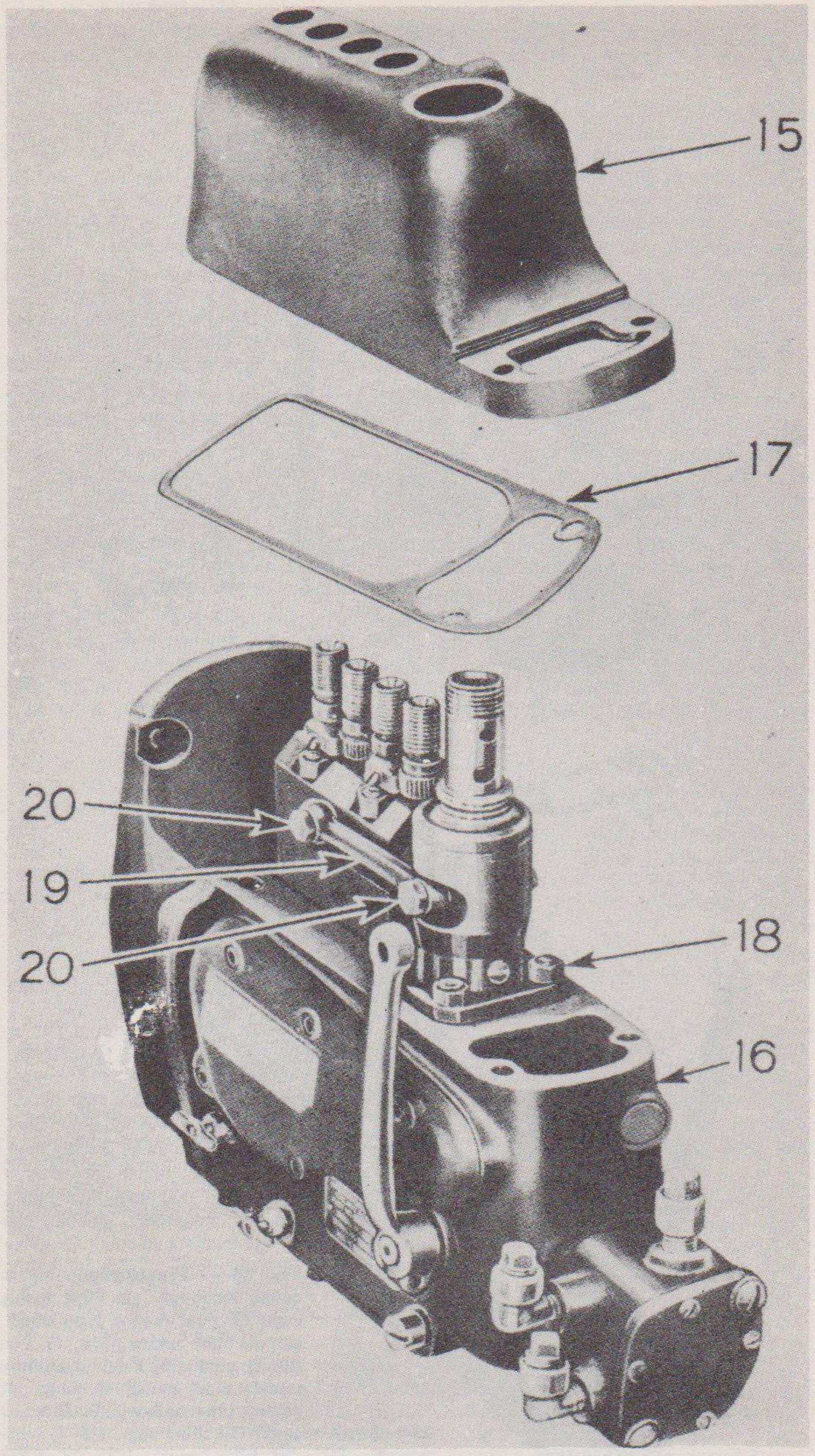

Fig. 31—Pump housing cover removed. (15) Pump housing cover. (16) Pump housing. (17) Pump housing cover gasket. (18) Nuts holding plunger bushing retainer to pump bushing. (19) High-pressure pipe. (20) High-pressure pipe screw.

The plunger and bushing, or a complete plunger unit, may be replaced while the injection pump is mounted on an engine. The plunger and bushing are lapped to one another. Contacting surfaces of the check and reverse-check valve block and plunger bushing are very finely finished and lapped to hold the high injection pressure. No seals, other than the lapped surfaces, are used at this point. Extra care must be used to keep these parts clean when servicing.

If a new plunger and bushing, or a complete new plunger unit, is installed in the injection pump, either on or off the engine, a check will have to be made. See the "Adjustments" at the end of this section.

Wear of the plunger and bushing due to the entrance of dirt will cause a loss of power. This will be particularly evident because the engine will not idle at low speeds. This assumes the engine is in good condition.

When loss of power is experienced, inspect both the fuel return check, the valve of the plunger unit, and the by-pass valve of the primary pump for faulty operation.

REMOVAL

The plunger assembly can be removed as a unit after taking off the injection pump housing cover, the high-pressure pipe and four nuts. No special tools are required. The replacement unit can then be immediately installed. Be sure all external parts are clean before proceeding.

Figure 30 shows the various items requiring removal before the housing cover (15) can be lifted from the pump housing (16). If the fitting (7) is accessible, it is not even necessary to remove the injection pump from the engine to replace the plunger.

With the pump removed from the engine, the seal (2) from the pump housing side cover (3), Figure 72, and from the oil filler neck can be broken. Next turn off the 1⅛" hex-head fuel return pipe cap (1), Figure 30. Lift off the fuel return pipe large washer (2) and unscrew the ¾" hex fuel return pipe screw (7) from the housing (16).

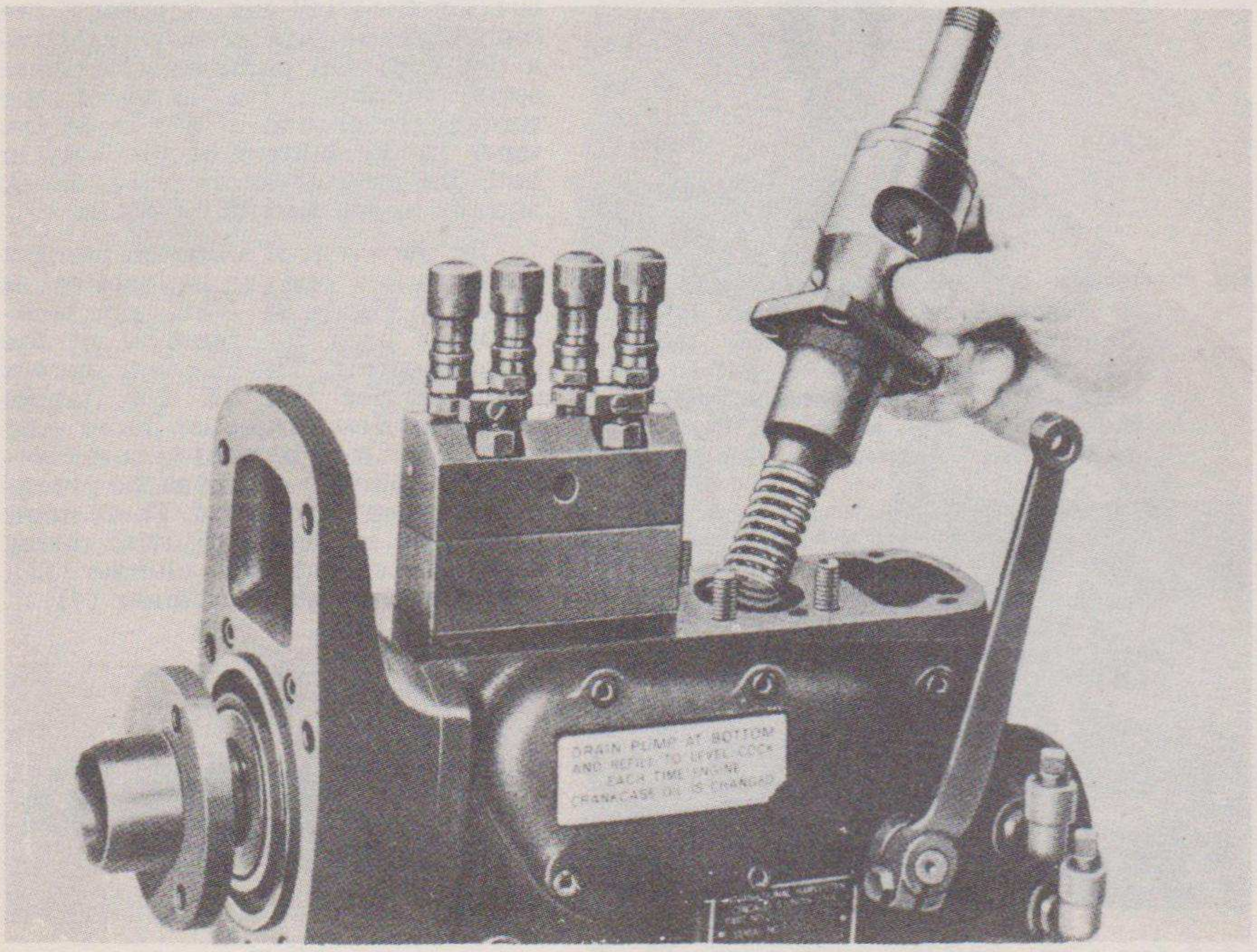

Fig. 32—Lifting plunger unit from the pump housing.

Removing the screw (7) releases the fuel return pipe small washers (6) on each face of the pipe fitting. The fuel return pipe (3), large washer (2) below the fuel return pipe (3), the neoprene fuel inlet fitting seal (4), the fuel inlet fitting (5), and the large washer (2) below fitting (5) can all be lifted off the plunger housing clamp (14) at the same time.

Remove the two bolts from the oil filler neck (11). Lift off the oil filler neck (11) with the gasket (12), leather washer (10), and cap (9). Then unscrew the four nuts (8) from the discharge fittings (13). The housing cover (15) can now be removed with gasket (17) as shown in Figure 31.

The high-pressure pipe (19) connecting the plunger assembly to the distributor assembly can be removed by unscrewing the high-pressure screws (20), Figure 31. The high-pressure copper gaskets on both sides of the pipe will come off when the assembly is removed. The four plunger bushing retainer stud nuts (18) may now be removed.

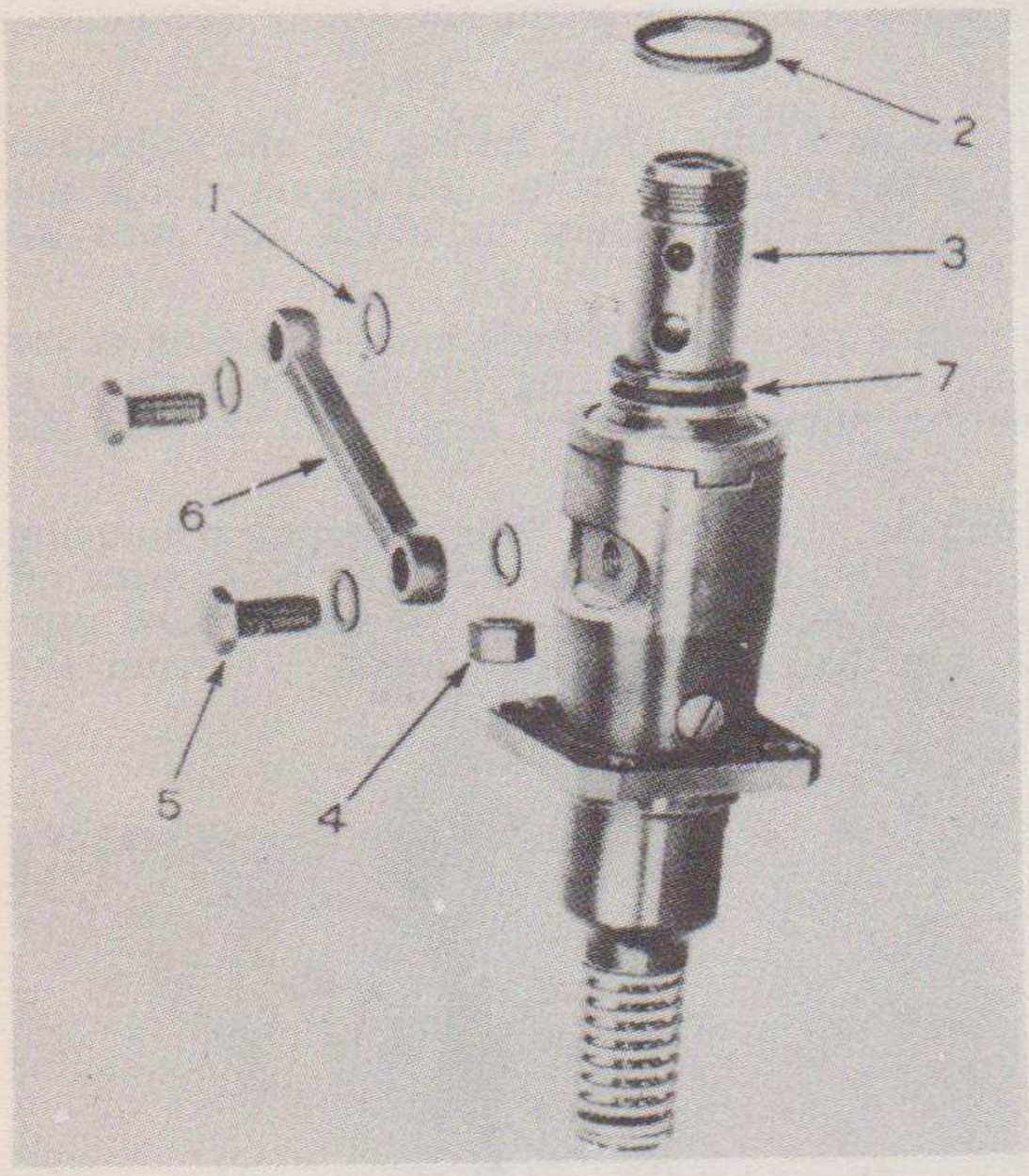

Fig. 33—Plunger unit and high-pressure pipe. (1) High-pressure pipe gasket. (2) Plunger bushing clamp seal. (3) Plunger bushing clamp. (4) Nut for holding unit to pump housing. (5) High-pressure pipe screw. (6) High-pressure pipe. (7) Groove for item (2).

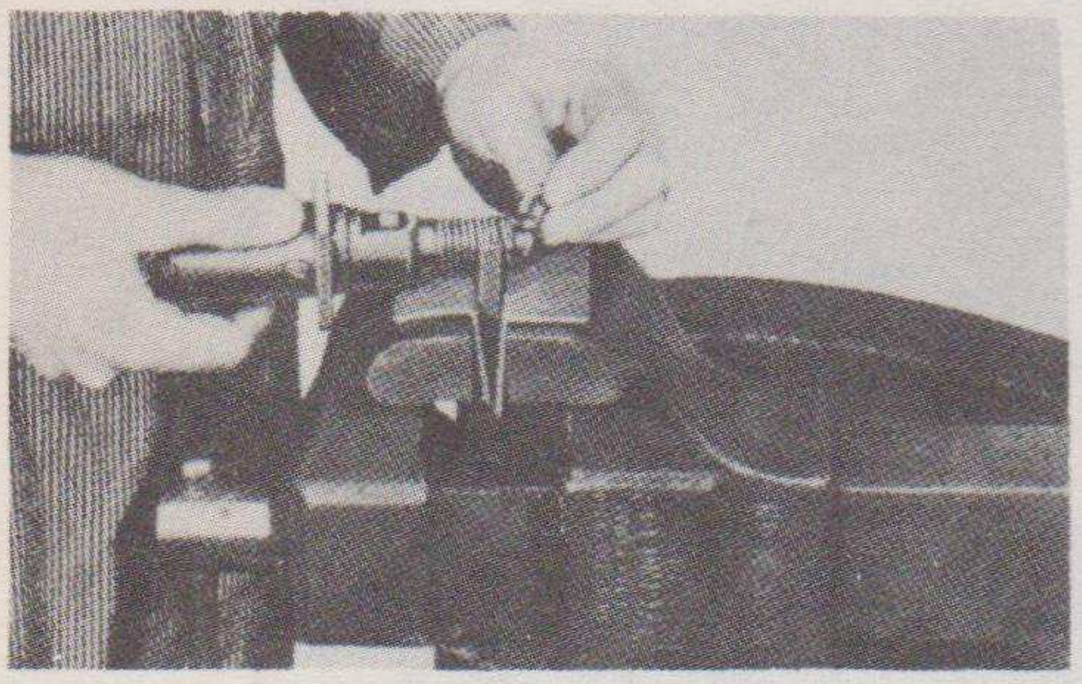

Fig. 34—Removing plunger spring seat with the aid of service tool SE-1308.

When all four nuts are removed, the entire plunger assembly can be lifted out of the pump housing as shown in Figure 32. A new or replacement unit plunger can now be installed as outlined under the "Replacement" heading.

DISASSEMBLY

The plunger unit as removed from the injection pump housing is shown in Figure 33. Slipping the high-pressure screws (5) from the high-pressure pipe (6) will release the two copper gaskets (1) at each end. The neoprene seal (2) can be taken from the groove (7) in the plunger bushing clamp (3).

On pumps below serial number 804 for the "14" Series pumps, the high-pressure pipe screws (5) have a flat end. On pumps above these serial numbers, the ends of the screws are ground at 30° to fit the taper in the bottom of the hole in both the reverse-check valve block and the upper distributor block.

In the event of a broken plunger spring, a new one can be installed as shown in Figure 34. This same technique is used for removal of the plunger spring. The mechanic here is using service tool SE-1308, tappet holder for Bosch Injection pump. Any such object may be used to help compress the plunger spring as the plunger spring seat is removed. These items are shown in Figure 37, with spring seat (1), spring (2), plunger (3), and plunger bushing retainer (4).

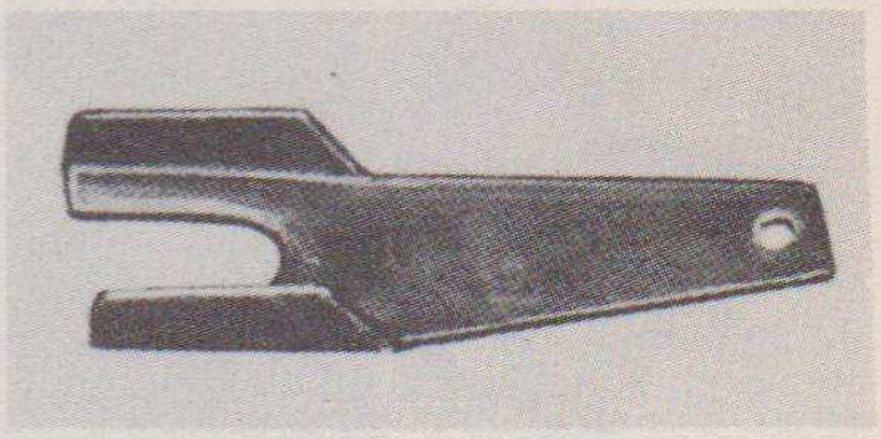

Fig. 35
Service tool SE-1308.

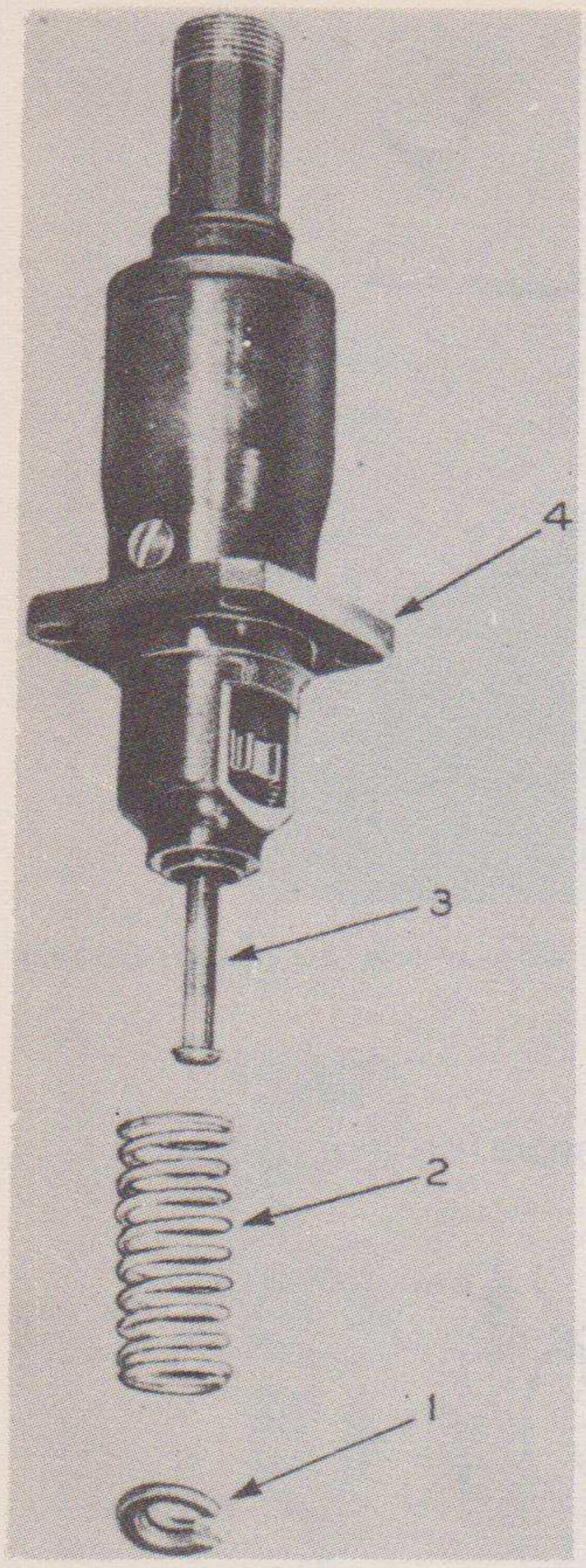

Fig. 37—Plunger spring and seat removed. (1) Plunger spring seat. (2) Plunger spring. (3) Plunger. (4) Plunger bushing retainer.

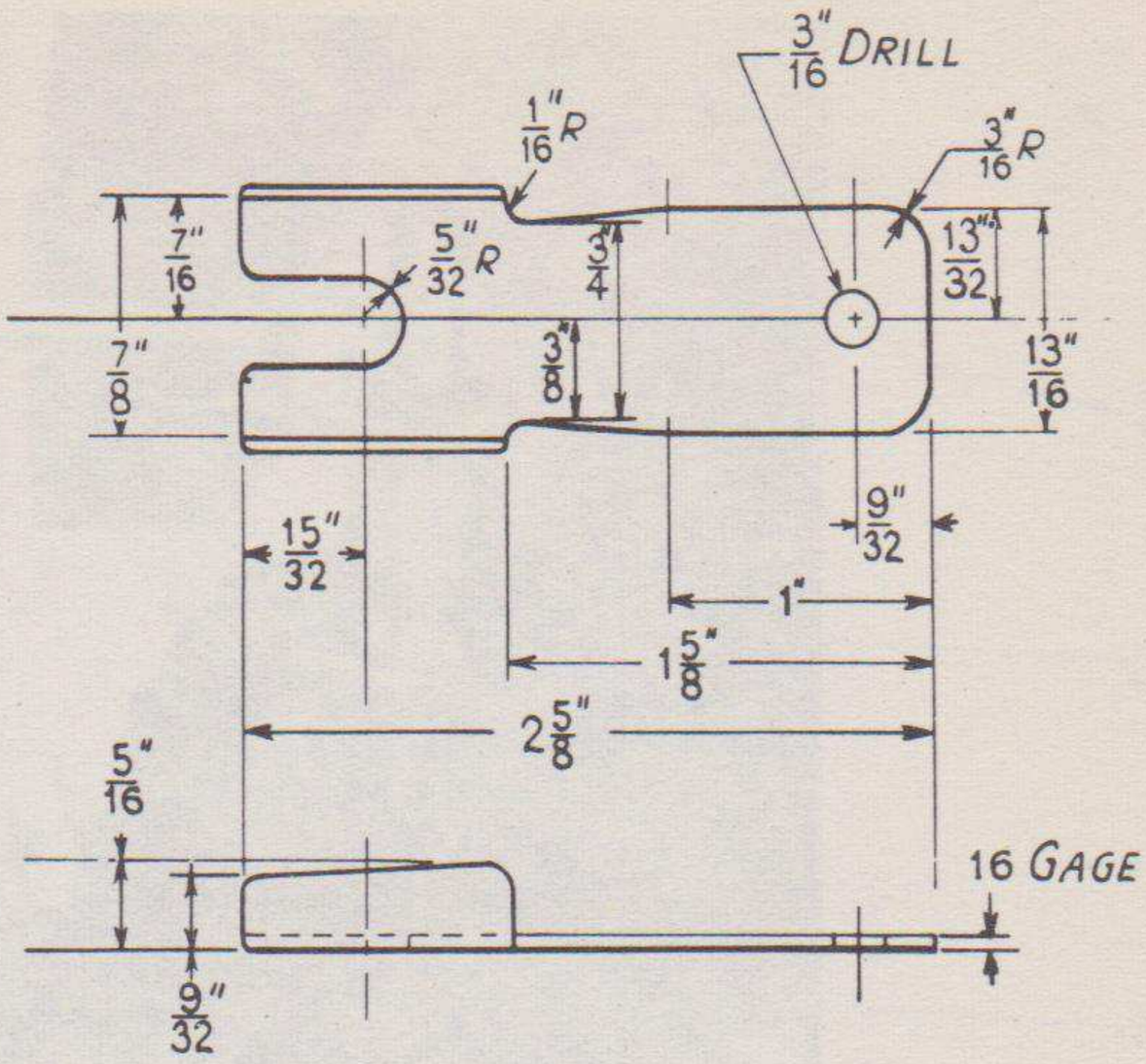

Fig. 36—Dimensions for making service tool SE-1308.

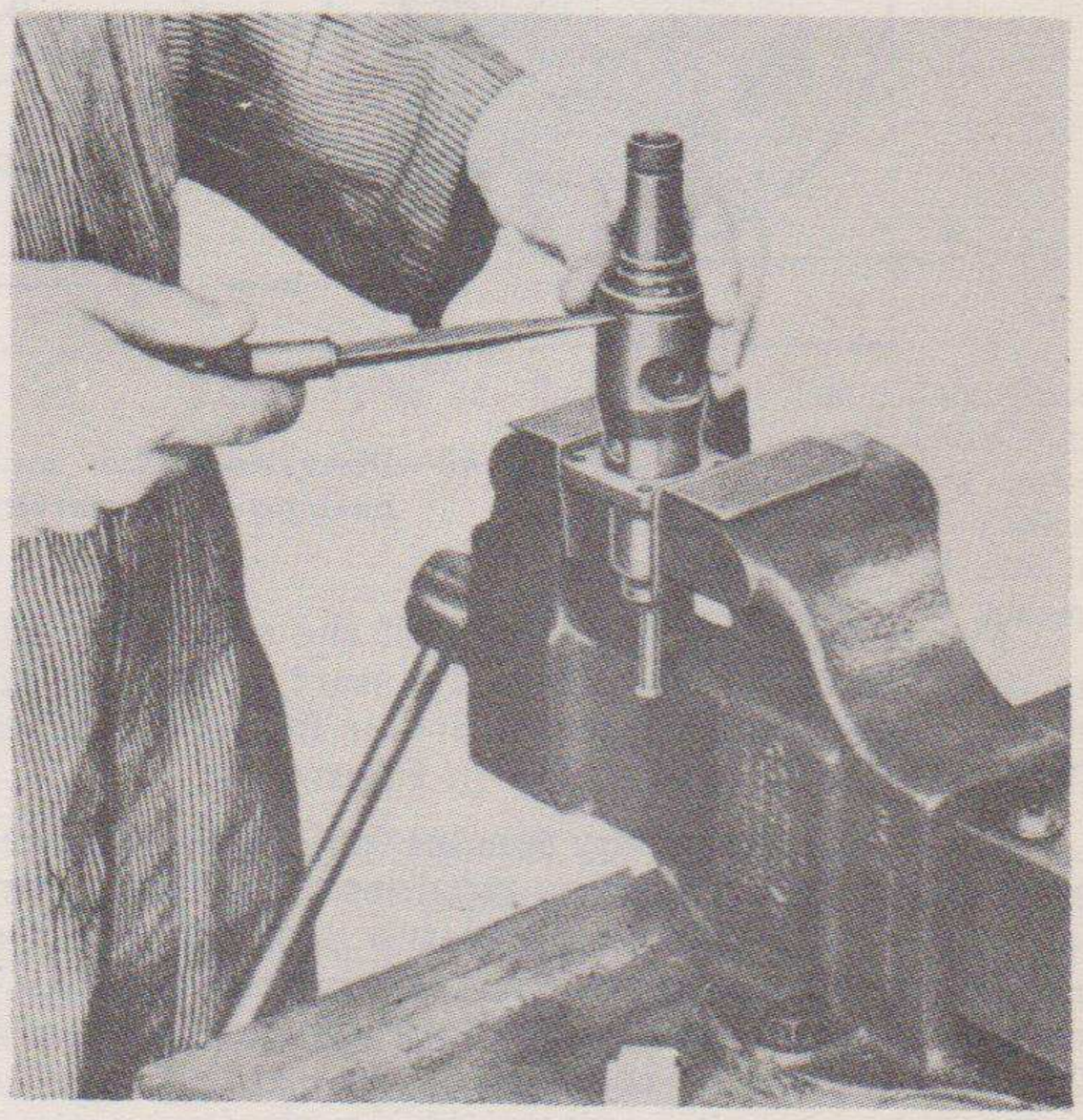

Fig. 38—Prying plunger bushing clamp lock from the assembly.

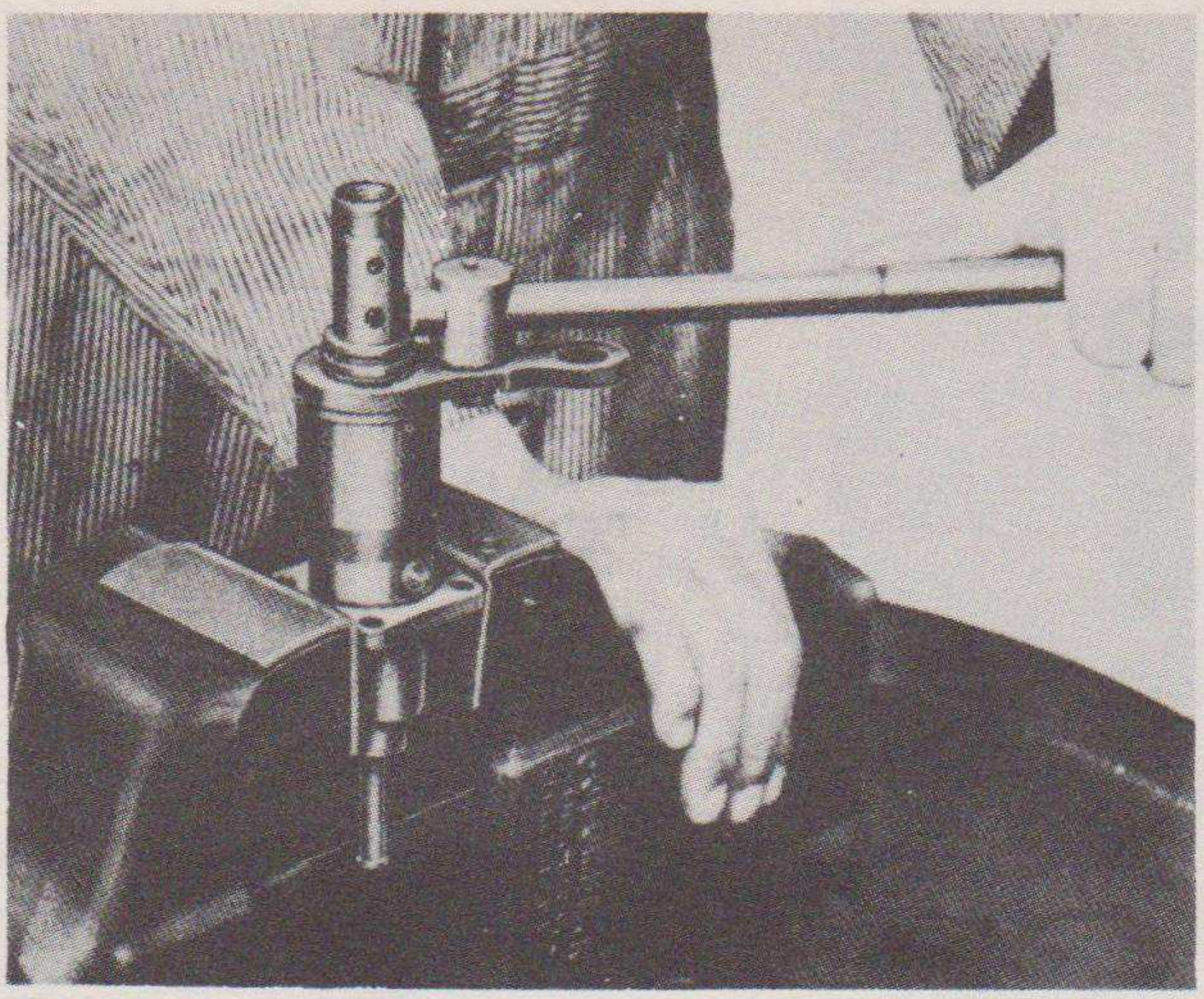

Fig. 39—Using service tool on inverted plunger bushing clamp lock to remove the plunger bushing clamp.

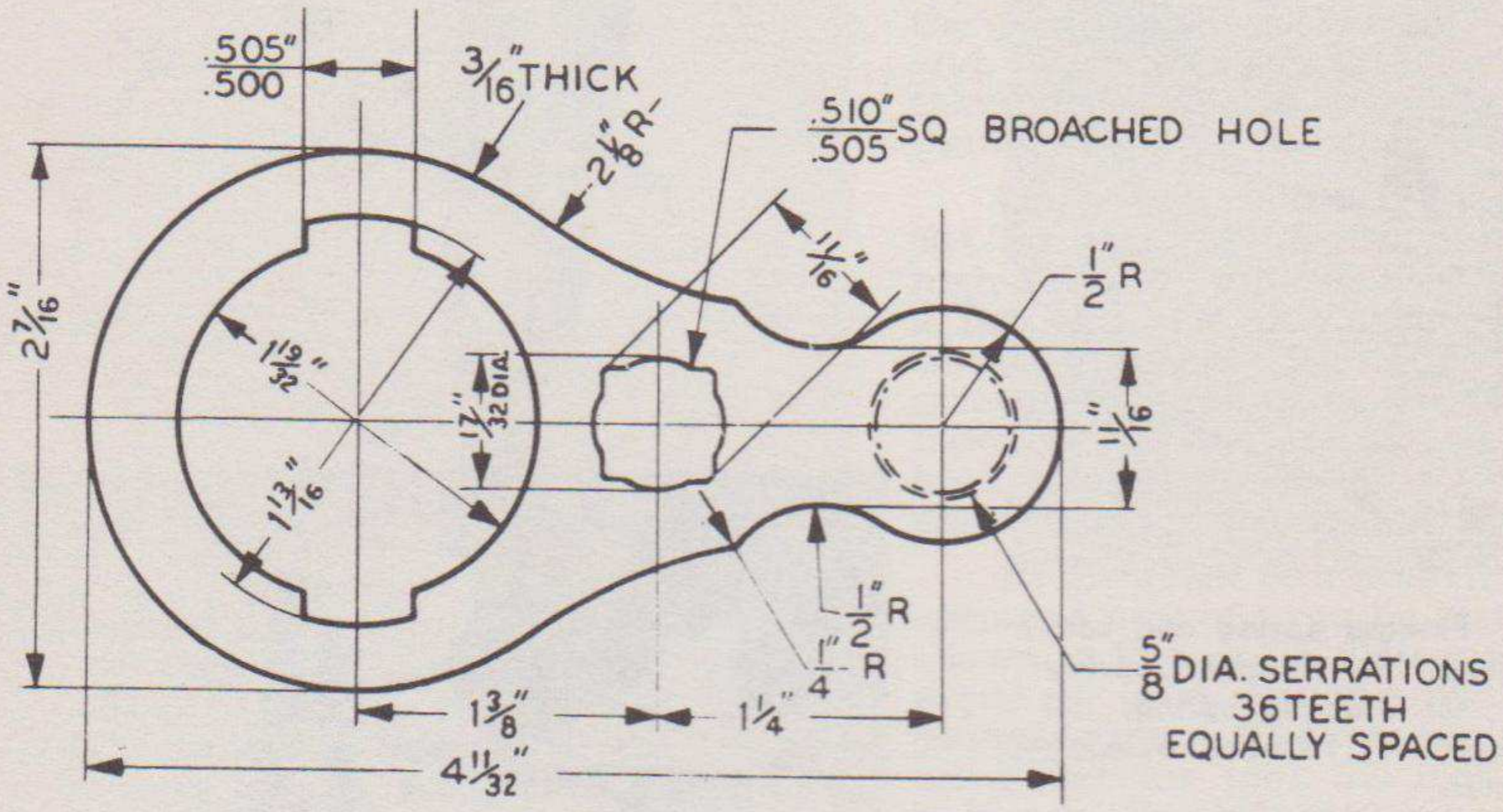

Fig. 40—Dimensions for making plunger bushing clamp service tool.

For complete disassembly of the plunger unit, or for removal of the plunger and its bushing from the assembly, start by taking off the bushing clamp lock as shown in Figure 38. Insert a screw driver from both sides to work it up and off the assembly. The clamp lock is item (1) in Figure 41.

Figure 39 shows the special tool (1) being used to unscrew the bushing clamp (2) from the plunger bushing retainer (4). Some pumps have 1½" diameter standard 48 serrations on the bushing clamp (2). Other injection pumps have the larger size, $1\frac{9}{16}$" diameter—48 serration bushing clamp (2). The service tool (1), Figure 41, fits both sizes when the clamp lock (5) is inverted and placed back on the clamp (2). The unit is held on the square mounting flange.

When the plunger bushing clamp (2), Figure 41, is unscrewed, the fuel filter element (3) can be lifted from the bushing retainer (4). The spacing between elements of the filter is .002".

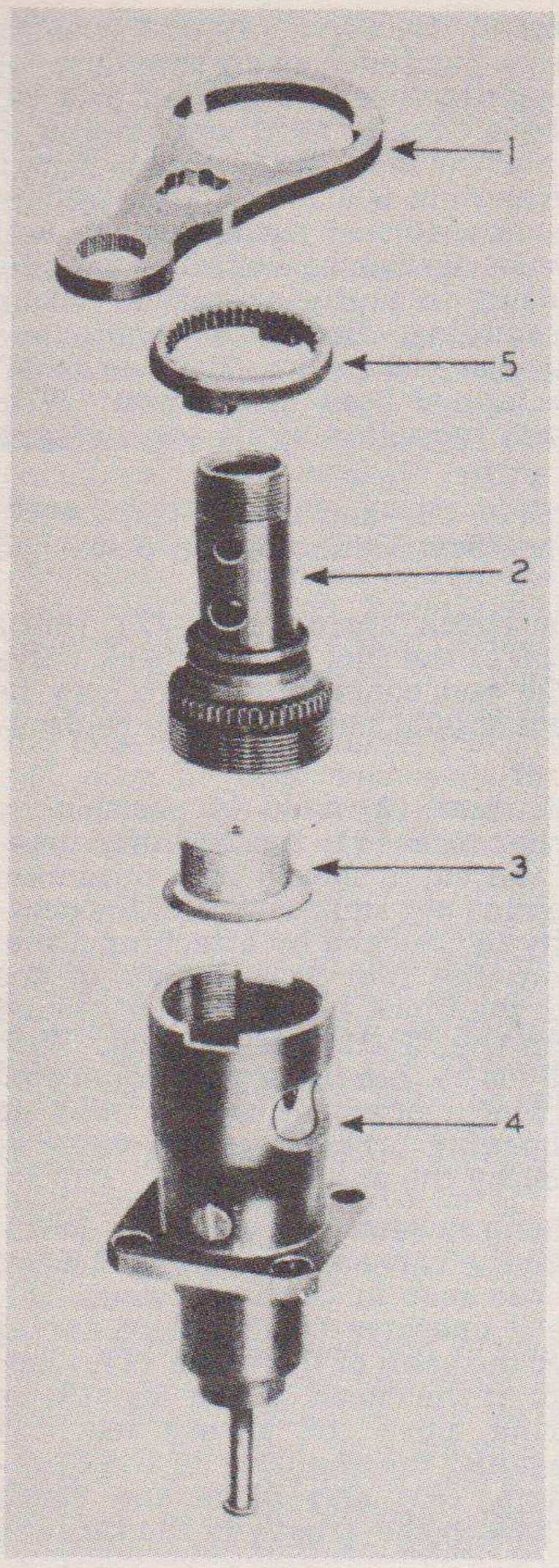

Fig. 41—Plunger bushing clamp removed.. (1) Service tool. (2) Plunger bushing clamp. (3) Fuel filter element (.002"). (4) Plunger bushing retainer. (5) Plunger bushing clamp lock.

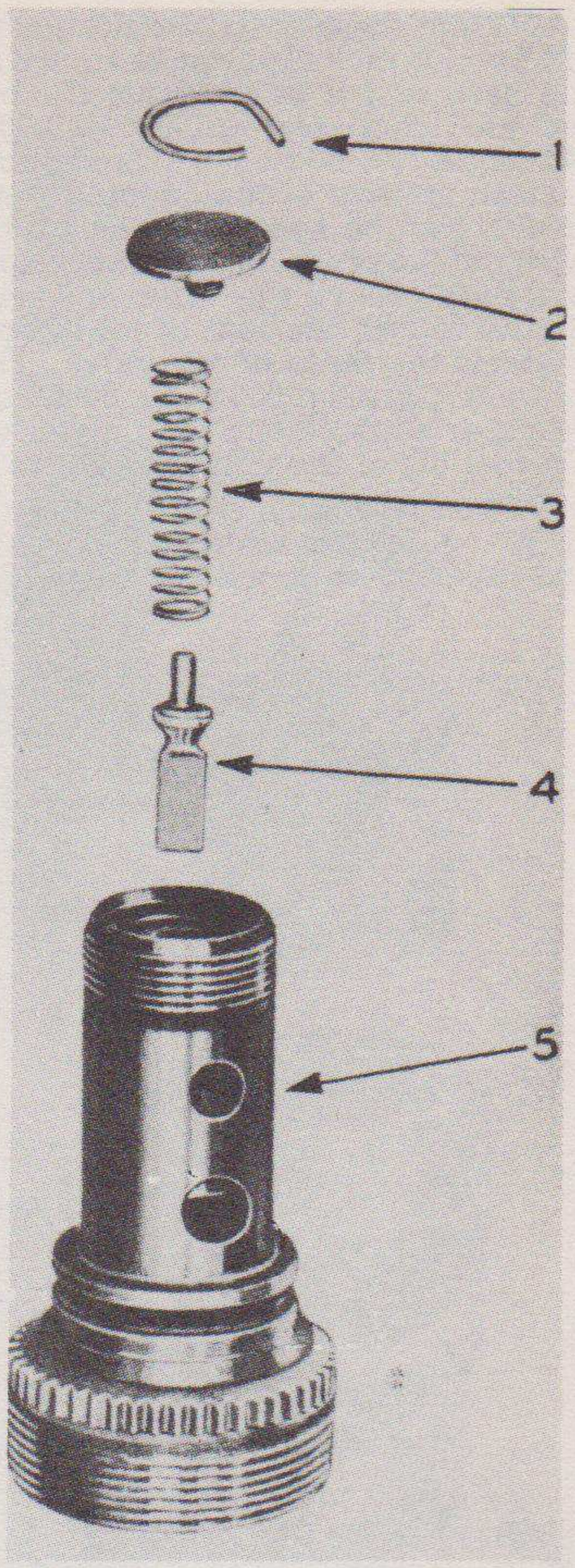

Fig. 42—Exploded view of plunger bushing clamp. (1) Fuel return check spring lock. (2) Fuel return check spring seat. (3) Fuel return check cpring. (4) Fuel return check valve. (5) Plunger bushing clamp.

Fuel Return Check Valve

The parts within the bushing clamp may be removed for inspection and reassembled before proceeding further, if the primary pump check indicates the fuel return check valve is not operating properly. The fuel return check spring lock (1), Figure 42, can be pried from the groove inside the top of bushing clamp (5) releasing the fuel return check spring seat (2), check valve spring (3), and the check valve (4). Use caution when removing the spring lock (1) to prevent losing the spring (3) and spring seat (2). Inspect the valve and seat in the bushing clamp for evidence of dirt on either part which might cause faulty operation. Thoroughly clean the parts and further inspect the seat and valve for wear.

While these parts should never require replacement, the valve (4) and bushing clamp (5), including the seat, are available as a service part only as an assembly. A file-hard seat is pressed into the bushing clamp in manufacture and ground to a 64° included angle seat of .004" to .006" width. The valve is equally hard and ground to 60° angle. These two are lapped together for a very narrow seat. If the seat is pitted, a small amount of fine lapping compound (Norton Alundum 600 X or Carborundum H-400) can be applied to the valve surface and the valve turned lightly on the seat with the fingers to clean off such spots. A wide seat is not desirable; continued lapping will only groove the valve and widen the seat, resulting in faulty operation. Clean the valve and the seat of all compound before reassembling. Be sure no compound contacts the flutes of the valve. The flutes of the valve are lapped to .2500" to .2502" diameter, giving .0002" to .0006" clearance with the lapped bore in the seat. With both parts lubricated, the valve should slide in the seat propelled by its own weight. Normal lift of the valve is .025" to .040".

The fuel return check spring (3) has a free length of 1¼" and should test 1.4 lbs. at ¾". A spring which does not measure to this specification should be discarded and replaced with one that does.

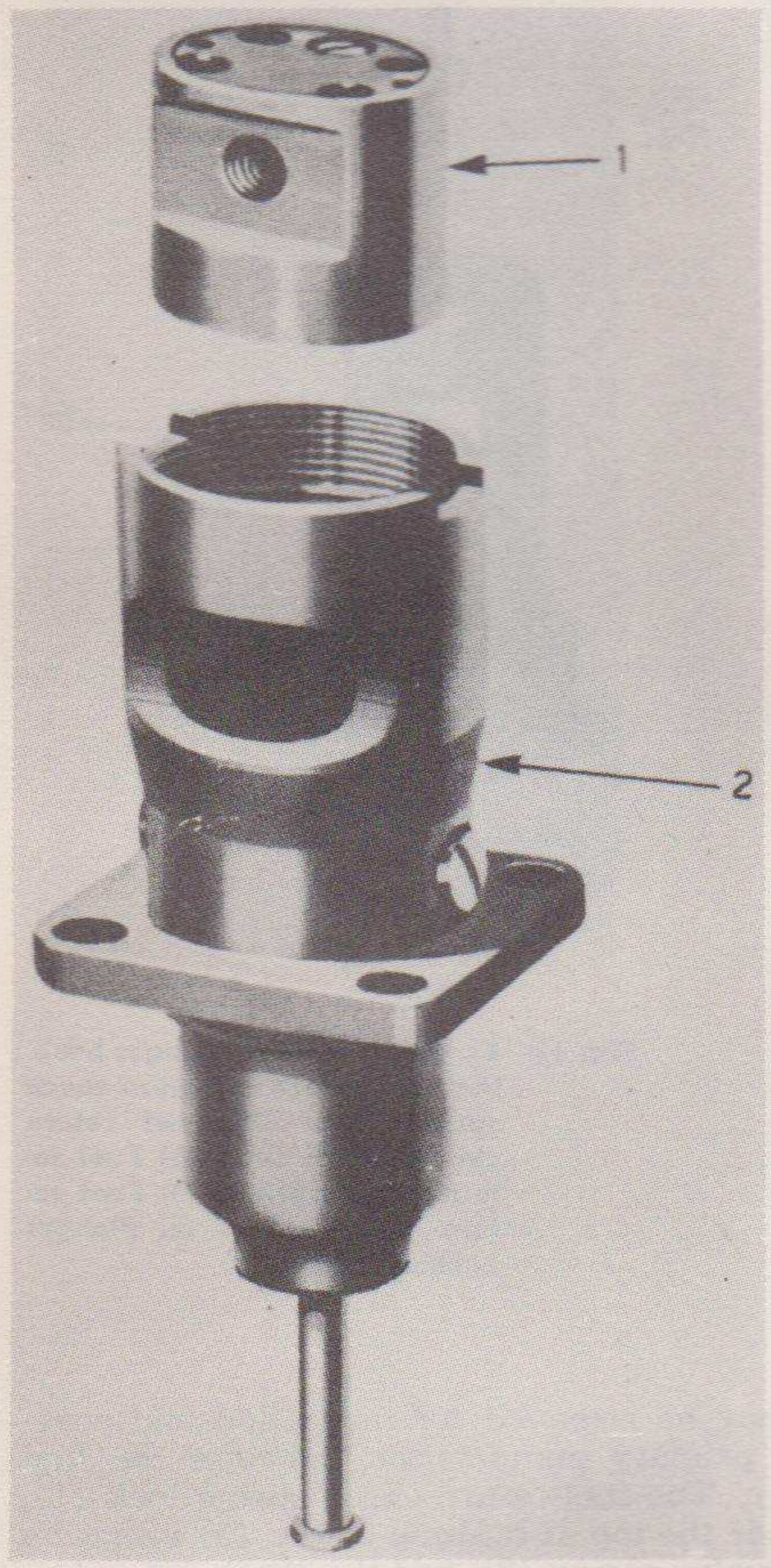

Fig. 43—Check and reverse-check valve unit removed. (1) Check and reverse-check valve unit. (2) Plunger bushing retainer.

The check spring seat (2) limits the travel of the fuel return check valve (4). The end contacting valve may be shiny but should never require replacement.

With seat (2) held in position by the spring lock (1), the opening pressure of the valve should be a minimum of 45 pounds per square inch. This pressure may be checked by attaching a fuel line from the fuel inlet fitting of the pump to the block below the 150-pound gauge on the SE-1247 test bench. With the SE-905-A nozzle tester connected to this block, pressure can be built up to the opening pressure of the valve as indicated by the gauge.

When reassembling this unit, lubricate both the valve and seat, insert valve (4) in the seat in bushing clamp (5), be sure it operates freely, place spring (3) over the stem of the valve (4), place the stem of the check spring seat (2) in the spring, push the spring seat (2) down against the shoulder in the bushing clamp (5), and place the check spring lock in the groove in the bushing clamp.

The function of the fuel return valve is twofold. (1) To maintain practically constant pressure for charging the injection plunger and (2) to lubricate the scavenging pump.

Check and Reverse-Check Valve Unit

Inverting the plunger bushing retainer as shown in Figure 41 will allow the check valve block unit (1), Figure 43, to fall out. On some pumps there is a tapped hole in the plunger bushing retainer opposite the slot in the reverse-check valve block. No screw is ever used in this hole; the hole was made for manufacturing purposes only.

On pumps below serial number 804 for the "14" Series pumps, the high-pressure pipe screws (5), Figure 33,

had a flat end. On pumps above these serial numbers, the ends of the screws are ground at 30° to fit the taper in the bottom of the hole in the reverse check valve block (3), Figure 44.

To separate the check valve block from the reverse-check valve block, the two screws (1), Figure 44, must be removed. Lifting the reverse-check valve block (3) from the check valve block (9), frees the reverse-check valve (4), its spring (5), the check valve (8), and its spring (7). The reverse-check valve stop (6) may stick in the check valve block (9); there is no need to remove it if this occurs. Some pumps have a reverse-check valve stop pressed into the check valve block (9). Make no attempt to remove it. Cleaning of the hole for the reverse-check valve (4) may be improved with the removal of the reverse-check valve screw (1) with its copper washer (2).

The mating surfaces of the two blocks (3) and (9) are very finely lapped and fitted to one another. As a result, these are only available as a complete assembly including all items in Figure 44. The two springs (5) and (7) are available as service parts. The reverse-check valve spring (5) has a free length of $\frac{21}{64}$" and should test 6.07 lbs. at $\frac{19}{64}$". The check valve spring (7) has a free length of $\frac{5}{8}$" and should test 5 lbs. at $\frac{7}{16}$".

Clean all valves and blocks and inspect both valves and seats with a magnifying glass. If the seats or valves are pitted, this may be corrected by applying a very small amount of fine lapping compound (Norton Alundum No. 600-X or Carborundum H-400) to the valve and by lightly turning the valve on its seat with the fingers. Thoroughly clean the block and valves after lapping; be sure no compound was used on the flutes of the valves. Also make certain that the small drilled holes connecting the reverse-check valve spring chamber with the check valve bore in the check valve block are open.

The valve seats in the blocks, as well as the seating area of the valves, are both ground to a 45° angle. The fluted stem of the valves are selective fitted to the bores, and then the valve is final lapped to the seat. The valve, when lubricated, should fall within the block, propelled by its own weight. The diameter of the flutes on

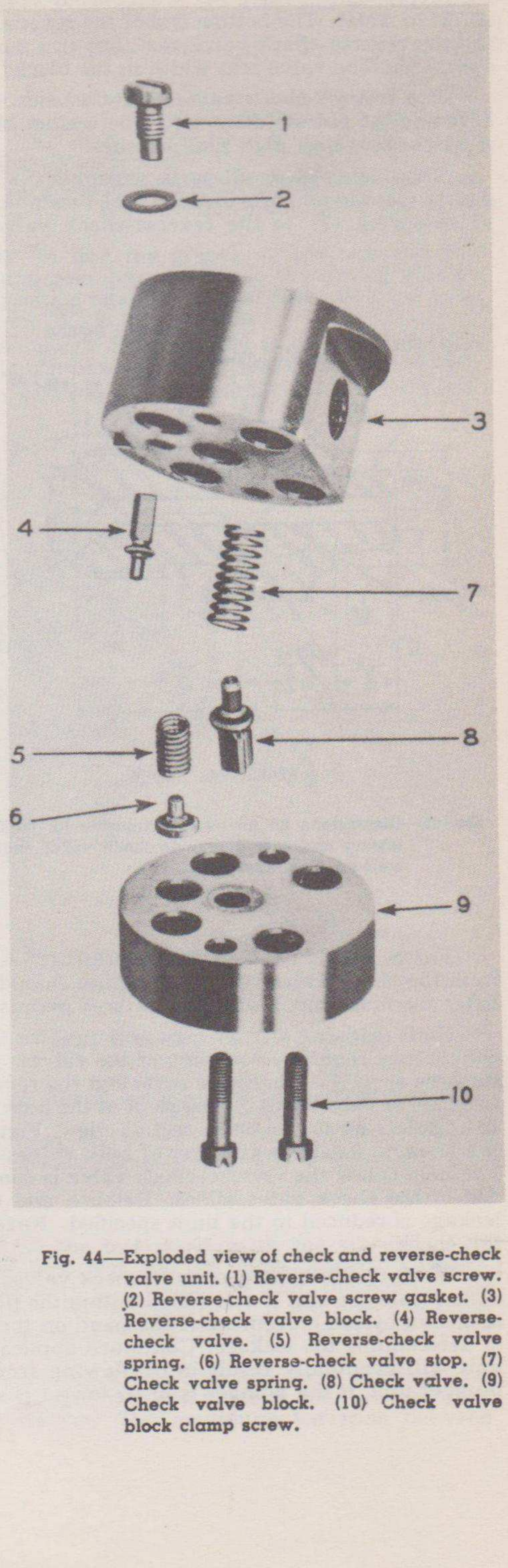

Fig. 44—Exploded view of check and reverse-check valve unit. (1) Reverse-check valve screw. (2) Reverse-check valve screw gasket. (3) Reverse-check valve block. (4) Reverse-check valve. (5) Reverse-check valve spring. (6) Reverse-check valve stop. (7) Check valve spring. (8) Check valve. (9) Check valve block. (10) Check valve block clamp screw.

the reverse-check valve (4) are .1248" to .1249", while those of the check valve (8) are .1873" to .1874". The bottom end of the reverse-check valve may be shiny from bumping the reverse-check valve stop, but this condition will not have any effect on the operation. The valve seat width in the blocks is .012" to .015".

The reverse-check valve screw washer (2) is .025" to .032" thick with an $\frac{11}{64}$" bore and $\frac{9}{32}$" outside diameter. The washer should be flat and free of ridges so that it will seal against high fuel pressure.

Thoroughly clean all parts, assemble the reverse-check valve screw (1) with its gasket (2), dip all parts in clean fuel, assemble the reverse-check valve (4) and check valve spring (7) to the reverse-check valve block (3). Place the reverse-check valve stop (6) and spring (5), and the check valve (8) in the check valve block (9). Be sure both valves slide freely in the blocks, place the blocks together, and then assemble the two screws (10).

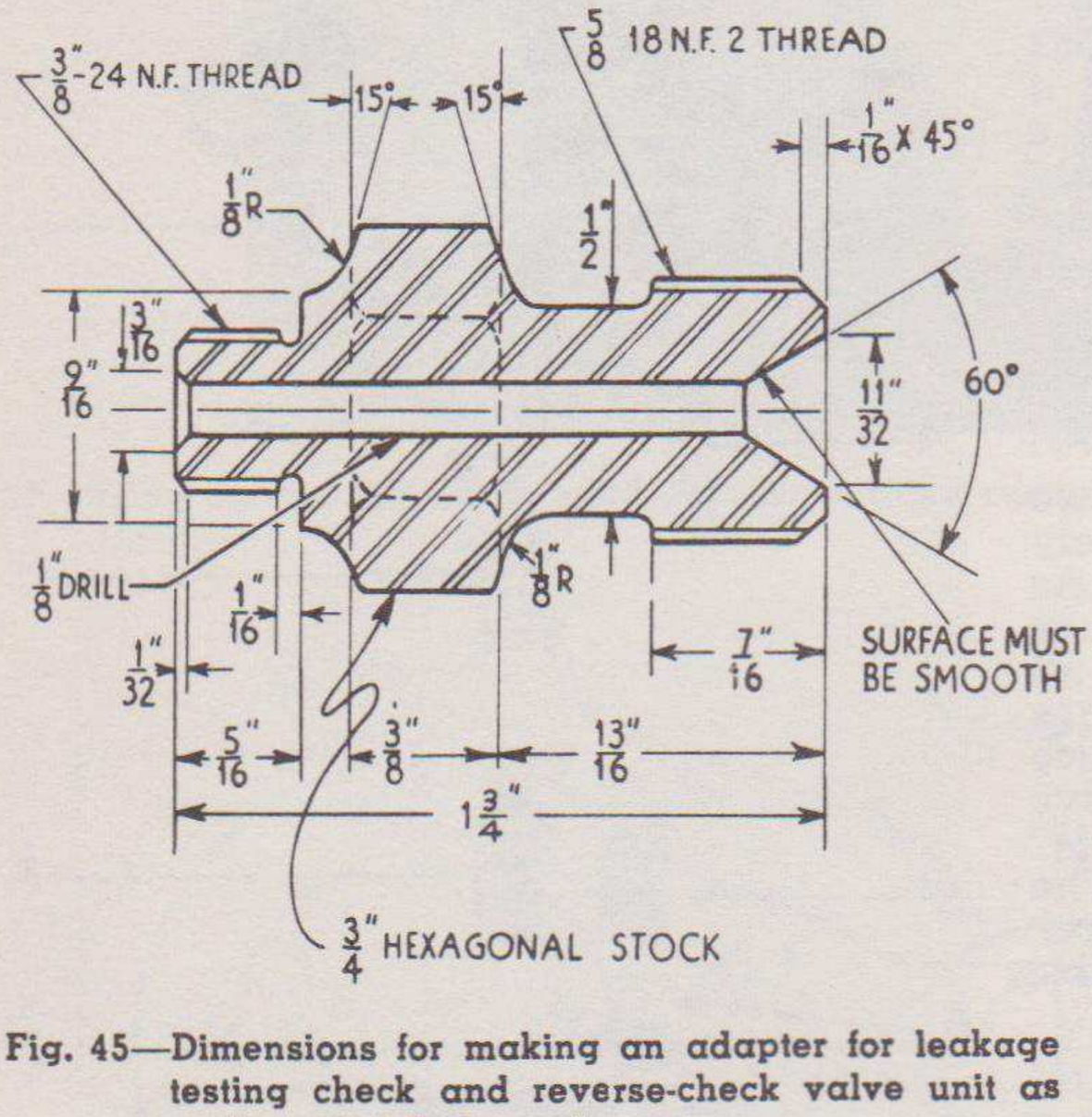

Fig. 45—Dimensions for making an adapter for leakage testing check and reverse-check valve unit as well as distributor unit.

The seating of the check and reverse-check valves can be checked when the unit is assembled to the plunger bushing retainer, or preferably while it is removed. The fitting or adapter sketched in Figure 45 can be attached to the large threaded hole in the reverse-check valve block (9), Figure 44, with the high-pressure pipe screw gaskets (1), Figure 33. The 5/8" threaded end can be attached to a high pressure pipe from a hydraulic test pump such as SE-905-A when equipped with a 150 lb. gauge such as furnished with the injection pump test bench SE-1247. Build up the fuel pressure to 150 lbs. as indicated on the gauge and maintain this pressure throughout the test.

Valves should not leak at this pressure. After the first drop of leakage is evident from the check valve bore, one minute should expire before the next drop falls off. After the first drop, a drop a minute is permissible.

Units dripping oftener may only require thorough cleaning to seal this pressure. Others may require retouching of the valves. Check for leakage between the lapped surfaces as well as the valve seats and the reverse-check valve screw (1), Figure 44. Leakage of valves will be apparent at the hole in the bottom of the check valve block (9). Referring to the cross-section view, Figure 29, or Service Chart, Figure 47, it can be seen. Leakage at either or both valves will appear at this hole in the bottom. The hole below the reverse-check valve is connected to the hole in which the fluted end of the check valve slides. Retouch and clean only one valve at a time until leakage is reduced to the limit specified. Never use more than 150 lbs. pressure for this check.

When the check and reverse-check valves are tested for leakage or dirt on their seats, while the unit is assembled within the plunger unit, the rate of loss of pressure as shown by the movement of the hand on the gauge will be the only apparent way of determining the leakage. Continued application of hydraulic pressure to a leaking unit will eventually result in oil flowing from the fuel inlet fitting on top of the plunger unit, if the plunger is in its lowest position.

Figure 46 shows the remainder of the plunger assembly which can be removed from the plunger bushing retainer (4) after taking out the two plunger bushing screws (5) with their copper gaskets (6). Inverting the retainer (4) will then allow the plunger bushing (1) with plunger (2) and plunger control gear (3) to fall out. This completes the disassembly of the plunger unit. After repair or replacement of any of the parts, reassembly can be completed.

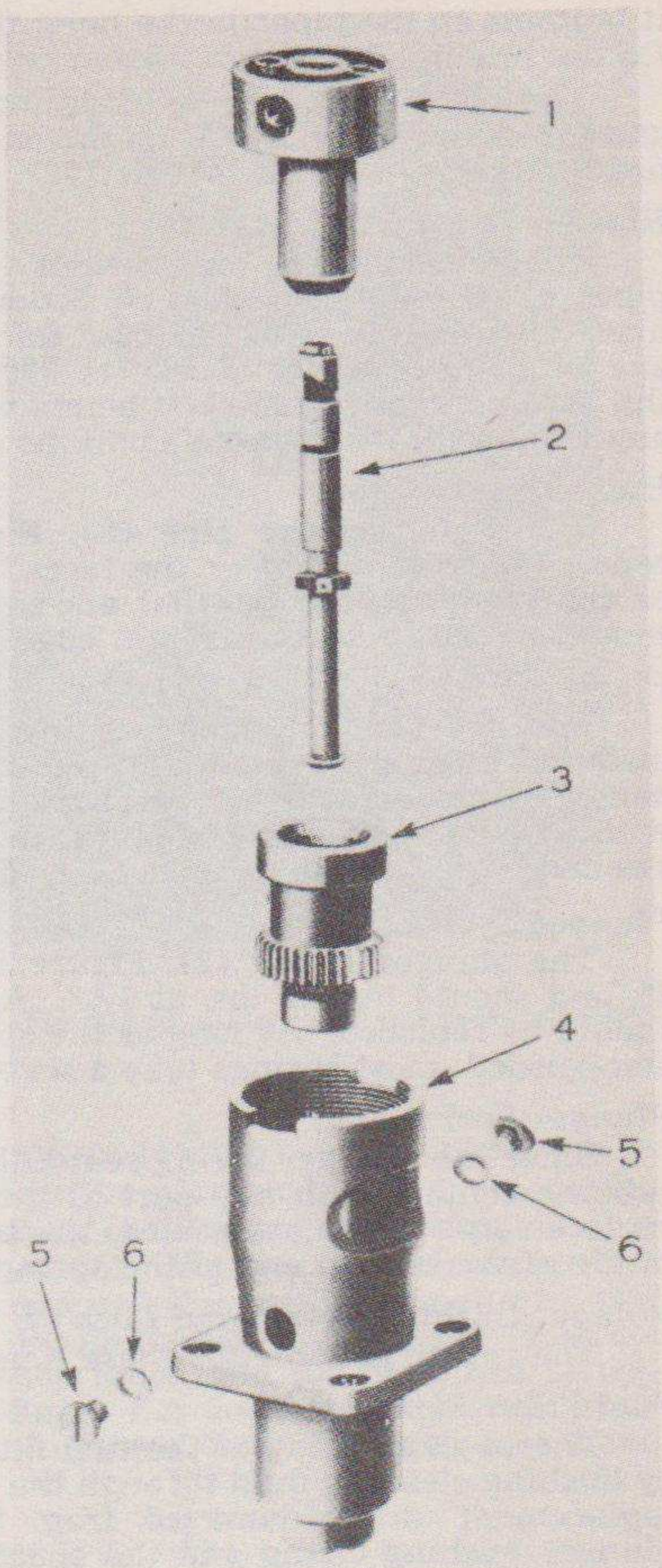

Fig. 46—Plunger assembly exploded view. (1) Plunger bushing. (2) Plunger. (3) Plunger control gear. (4) Plunger bushing retainer. (5) Plunger bushing screw. (6) Plunger bushing screw gasket.

REPAIR

Of the several items removed prior to actually taking the plunger unit from the pump housing, all play an important part in the proper functioning of the injection pump.

Fuel Return Pipe Large Washers

The fuel return pipe large washers (2), Figure 30, are made of hard copper of .055" to .062" thickness with an outside diameter of $1\frac{9}{32}$" and an inside diameter of $\frac{37}{64}$". All three of these washers must be flat and smooth for proper sealing of the fuel pressure (35-40 lbs.). The fuel return pipe cap is tightened to 75 ft. lbs. torque.

Fuel Return Pipe

The fuel return pipe (3), Figure 30, should have the fitting surfaces square with each other. With the fitting bolted to the side of the housing and gaskets (6) in place, the top surface should be parallel to the fitting (5).

Fuel Return Pipe Small Washers

The fuel return pipe small washers (6), Figure 30, are made of hard copper of .055" to .062" thickness with an outside diameter of ¾" and an inside diameter of $\frac{33}{64}$". Both washers must be flat and smooth. There is no particular pressure at this point. Tightening of the fuel return pipe screw too much, or misalignment of the fuel return pipe (3) should be the only reasons for damaging the washers.

Fuel Inlet Fitting Seal

The fuel inlet fitting seal (4), Figure 30, is made from neoprene, $\frac{5}{64}$" thick, $1\frac{1}{64}$" outside diameter and ⅞" inside diameter. These seals expand from contact with oil and may require replacement at the time of overhaul. This particular seal keeps the fuel from the fuel inlet fitting at 35 to 40 lbs. pressure from leaking into the fuel return line and fits down into the groove on the upper face of the fuel inlet fitting.

High-Pressure Pipe Screws

The high-pressure pipe screws (5), Figure 33, used on pumps with serial number 804 for the "14" Series pumps, are different than those used on later pumps. This change takes place at the same time the distributor block is changed to accommodate the new screw. The base of the tapped hole in the reverse-check valve block is flat on the pumps below the above serial number to accommodate the flat end of the screw. Screws on pumps above the serial number mentioned have a tapered end, and the hole in the block is tapered to accommodate it. These screws can be used for all blocks but the flat-end screws cannot be used with the new blocks. With a flat-end type screw assembled to a taper style block, the screw will enter with hand turning until

it bottoms on the taper in the hole; the high-pressure pipe and gaskets will be loose. Do not attempt to tighten further or the block may be cracked as a result.

Flat-end screws can be made into the new style by grinding .010" from the end and grinding a 30° chamfer on the ends so that the distance from the underside of the head to the chamfer is .748" to .750".

High-Pressure Pipe Gaskets

The high-pressure pipe gaskets (1), Figure 33, on both sides of the high-pressure pipe (6) must be in perfect condition to hold the high injection pressure. They are made from brass of .050" to .055" thickness with an outside diameter of .560" to .570" and an inside diameter of .385" to .390". Both faces must be parallel and smooth. With the pump operating on a test bench without the pump housing cover (15), Figure 31, any leakage at these gaskets may be observed and corrected.

High-Pressure Pipe

The high-pressure pipe (6), Figure 33, should never require replacement or repair unless it is bent or the faces have been damaged. Both finished faces should be absolutely smooth, parallel, and square with the reamed holes. No perceptible light should be seen below a straight edge when laid across both faces of the pipe.

Plunger Bushing Clamp Seal

The neoprene plunger bushing clamp seal (2), Figure 33, must be properly installed in groove (7) of the plunger bushing clamp (not inside out) to prevent damage when assembling the pump housing cover. New seals are .118" to .132" thick with an outside diameter of 1.088" to 1.098" and an inside diameter of $\frac{15}{16}$". Any seals swelled beyond these dimensions or damaged should be replaced.

Plunger Spring

The plunger spring (2), Figure 37, is identical end for end, has a free length of 2", and should test 22 lbs. at $1\frac{9}{16}$". A plunger spring falling below this specification should be replaced. As long as the spring load tests all right, the free length may be disregarded; most springs take a set after continued use.

Plunger Spring Seat

Since the plunger spring seat only retains the spring for the plunger and has no rubbing contact with any part of the mechanism, it should never require repair or replacement. When assembled, the bottom of the plunger should be .001" to .0025" inside of the bottom end of the spring seat.

Plunger Bushing Clamp and Lock

The repair possible for these items is discussed under "Disassembly."

Fuel Filter Element

Thorough cleaning of the fuel filter element (3), Figure 41, can be accomplished by flushing cleaning fluid through the filter in both directions. It should never require replacement unless damaged from handling. The surface where it contacts the plunger bushing clamp and the check block should be smooth and free of grooves. Spaces between the elements of the filter are .002".

Check Valve Block

The check valve block unit (1), Figure 43, is thoroughly discussed under "Disassembly." It should never require attention. Disassemble this unit only when an absolutely clean place is available and when the reverse-check valve screw (1), Figure 44, can be tightened against a good copper washer (2), for a seal against the high injection pressures.

Plunger and Bushing

A helix-angle plunger is used on the "14" Series Diesel Engines. These two parts are very finely machined and lapped to each other. As soon as the plunger is worn, there is no field salvage possible; complete replacement of the two parts is necessary.

Recognizing wear of the plunger can only be based on experience. It can be recognized quite the same as a scored piston. The wear occurs not from the friction of the two parts but from the dirt which may enter the pump with the fuel. With clean fuel, the plungers will give thousands of hours of operation. With dirty fuel, due to improper care of the fuel filters, a plunger may become worn similar to that shown in Figure 47. This plunger has been magnified many times and is much the same as a badly worn plunger appears under a strong magnifying glass. To the naked eye, the plunger will have lost its mirror-like appearance and looks dull or grey. Always use a soft cleansing tissue for wiping the plunger as well as holding the same. Scratches that can be felt with the fingernail are too deep for satisfactory performance. A corroded plunger should be replaced.

The chief portion to inspect is the area above the spiral at the top of the plunger. This short distance seals the high pressure developed by the plunger as it rises with the cam. The narrow portion compares with the idle speeds or a short injection period, while the wider portion compares with full-load operation.

A groove nearly ½" deep is machined in the top of the plunger bushing (1), Figure 46. In this groove are two plunger bushing dams made into ¼" diameter tube but with a $\frac{1}{16}$" slot running the entire length. When in place, the tops are a few-thousandths of an inch below the top surface of the plunger bushing. If they should happen to come out of place, they need only be pushed into the round holes with the slot facing the groove. The chamfered end should enter the plunger bushing first.

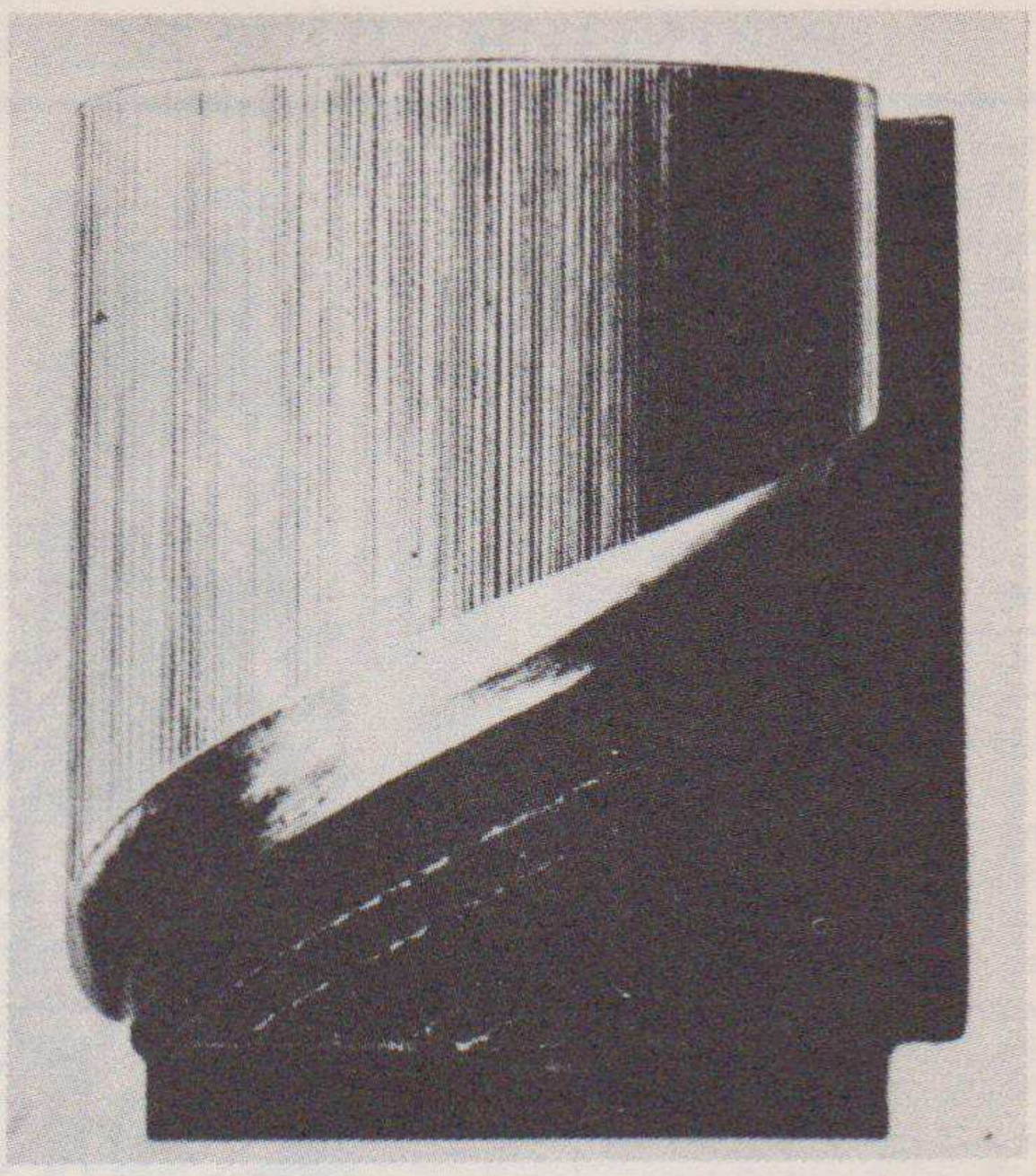

Fig. 47—Magnified photograph of a worn plunger.

Plunger Bushing Screw and Gasket

The plunger bushing screws (4) with their gaskets (5) have a two-fold purpose. First, they close the holes which must be drilled in the plunger bushing (1) during manufacture. Second, they locate the plunger bushing in the plunger-bushing retainer so the ports will be in the proper relation to the helix of the plunger when assembled. These gaskets are made from .050" to .055" thick copper. The inside diameter is .253" to .258" and the outside diameter is .370" to .380". While the screw and gasket does not have to withstand the high injection pressures, they must hold the pressures generated at the time of the port opening after the plunger has developed the high pressures. They should be in excellent condition and drawn down as tight as a hand screw driver turning will permit.

Plunger Control Gear

The plunger control gear (3), Figure 46, turns freely in the plunger bushing retainer (6). The spline on the plunger must pass freely through the splined hole in the control gear and have .003" to .005" shake.

The governor acting on the control rack rotates the control gear which in turn rotates the plunger. With this linkage, the governor determines the quantity of fuel delivered for the required load.

When completely assembled, and the bushing clamp tightened, the control gear (3) should have .008" to .016" end play between the retainer (4) and the flange of the plunger bushing (1). The clearance between the bearing surfaces of the control gear and the plunger bushing retainer is .001" to .0025". The plunger bushing has .0015" to .004" clearance in the plunger bushing retainer (4).

In view of the clearances stated above, the only possible wear on the control gear takes place on the teeth of the gear and on the bearing surfaces. The teeth of the gear when assembled in the pump housing have .002" to .004" backlash with the control rack. Visual inspection will indicate wear; too much play at the control rack or on the spline of the plunger will cause faulty governor operation. The outside diameter of the small end of the control gear is .6850" to .6855". Ordinarily neither the control gear nor the plunger bushing retainer ever needs replacing. The same holds true for the control rack discussed under the "Governor."

PLUNGER UNIT SERVICE CHART

Plunger bushing clamp can be removed after prying off clamp lock, reassembling inverted clamp lock, and applying special wrench to clamp lock. Use same tool for tightening clamp to **50** ft. lbs. torque. Up to **70** ft. lbs. torque may be used to make serrations line up for pushing or tapping lock into place. When tightening, place piece of narrow metal across check valve block opening in plunger bushing retainer and hold unit in a vise.

Check and reverse check valve block unit comes out after removing plunger bushing clamp. Lower surface is lapped to seal high oil pressure between it and top of plunger bushing. No seal or gasket is used. Two capscrews clamp lapped surfaces of both blocks of the unit together. Check valve spring free length if **5/8"** and should test **5** lbs. at **7/16"**. Reverse check valve spring free length is **21/64"** and should test **6** lbs. at **19/64"**. Be sure valve seats are clean and valves do not stick. Line up face of check valve block with opening in plunger bushing retainer when tightening plunger bushing clamp by using thin piece of metal across face and holding entire unit in a vise at this point.

Plunger and bushing may be removed after taking off plunger bushing clamp, fuel filter element, check and reverse check valve unit, plunger spring and seat, and taking out two screws in each side of plunger bushing. Inspect plunger for scores, particularly above the lower spiral. Use cleansing tissue for wiping or handling lapped surfaces of the plunger. Marked tooth on spline of plunger or "V" groove in spring seat end of plunger stem should line up with double tooth space of plunger control gear. After assembling entire unit, check bushing screws to see if they bind in the holes in the bushing retainer before tightening bushing clamp.
Line up face of check valve block with opening in plunger bushing retainer when tightening clamp. Then check plunger for free oscillating and reciprocating motion. Spring and seat can now be attached.

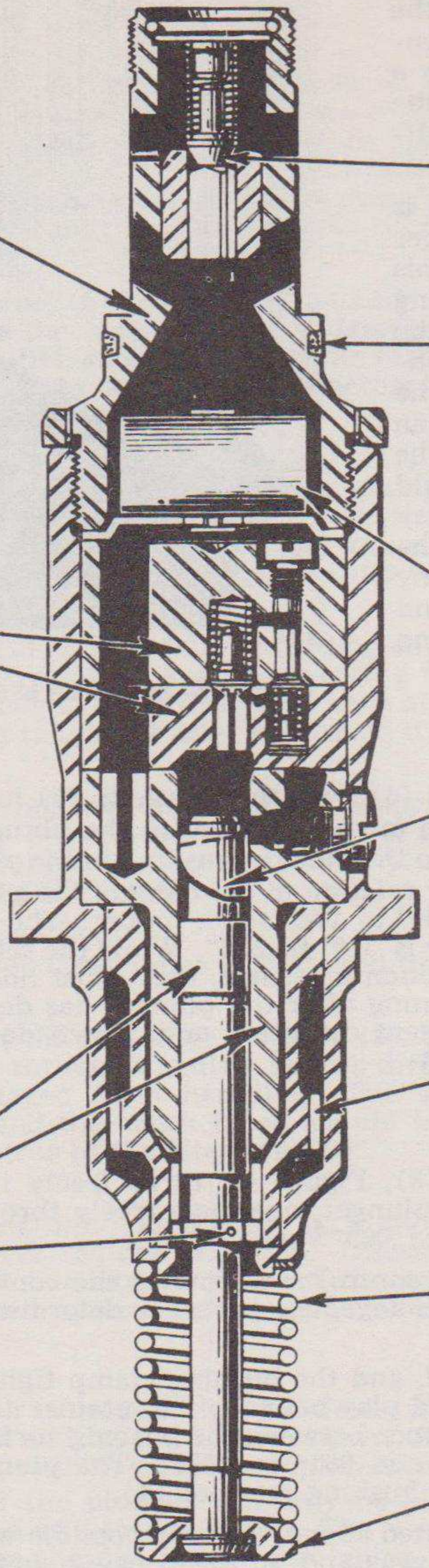

Fuel return check valve opening pressure is **45** lbs. per square inch. A sticky valve and dirt on the valve seat may cause low and unequal fuel delivery as well as low primary pump pressure. Valve can be removed after taking out spring lock. Free length of check spring is **1 1/4"** and should test **1.4** lbs. at **3/4"**. Seat in bushing clamp cannot be replaced.

Plunger bushing clamp seal (neoprene) may be located in the groove when both parts are free of oil. Seal assembled wrong side out will have outer surface slightly curved inward. Seal assembled properly in the groove will have flat outer surface.

Fuel filter element is an added precaution and removes dirt which enters fuel line from final filter during removal and replacement procedures. Plunger bushing clamp holds it against the top of check and reverse check valve unit.

Upper and lower spirals on top of plunger determine timing and quantity of fuel delivered for position of plunger as determined by the rack contacting the control gear.

Plunger control gear turns freely in plunger bushing retainer and is removed after plunger and bushing are freed. End play when assembled is **.008** to **.016"**; radial clearance on top and bottom round bearing surfaces is **.001** to **.0025"**. Double-width tooth space must line up with double width tooth on control rack when plunger unit is replaced. Spline in lower end of control gear engages spline on stem of plunger.

Plunger spring has a free length of **2"** and should test **22** lbs. at **1 9/16"**.

Plunger spring seat may be removed after compressing plunger spring. Service tool **SE-1308** held in a vise materially aids in compressing the spring so the seat may be slipped off stem of plunger. When assembled, end of plunger is **.001** to **.0025"** inside bottom end of seat.

Fig. 48—Plunger unit Service Chart.

REASSEMBLY

With the check and reverse-check valve block assembly complete, lay the top side of this assembly face down on a clean piece of smooth paper. The top side does not have the heads for the two, long, check-valve block clamp screws. It does have the reverse-check valve screw. Be sure this screw is as tight as consistent with a hand screw driver application.

Wash, dip in clean fuel, and slip the plunger into the plunger bushing. Be sure the plunger movement, either reciprocating or oscillating, is free at any position. Invert and place the plunger and bushing unit on top of the check and reverse-check valve block complete, with the holes for the screws in the plunger bushing parallel with the flat face of the reverse-check valve block as shown in Figure 49.

Next, lower the control gear over the plunger bushing, with the gear at the top and with the double-width tooth space lined up with the dot on one of the four splines on the plunger or with the "V" groove on the bottom end of the stem of some plungers. Then turn the gear until the double-width tooth space is on the opposite side from the flat spot on the reverse-check valve block as shown in Figure 49. Now lower the plunger bushing retainer over these items and turn it right side up to allow all parts to settle in place. Make certain that the spline does not slip out of the control gear. After the unit is assembled, check the "V" groove on the stem of the plungers so marked, with the double tooth space of the control gear.

Set the fuel filter element on top of the check and reverse-check valve block complete and turn the plunger bushing clamp on a few threads. Hold the assembly in a vise and turn

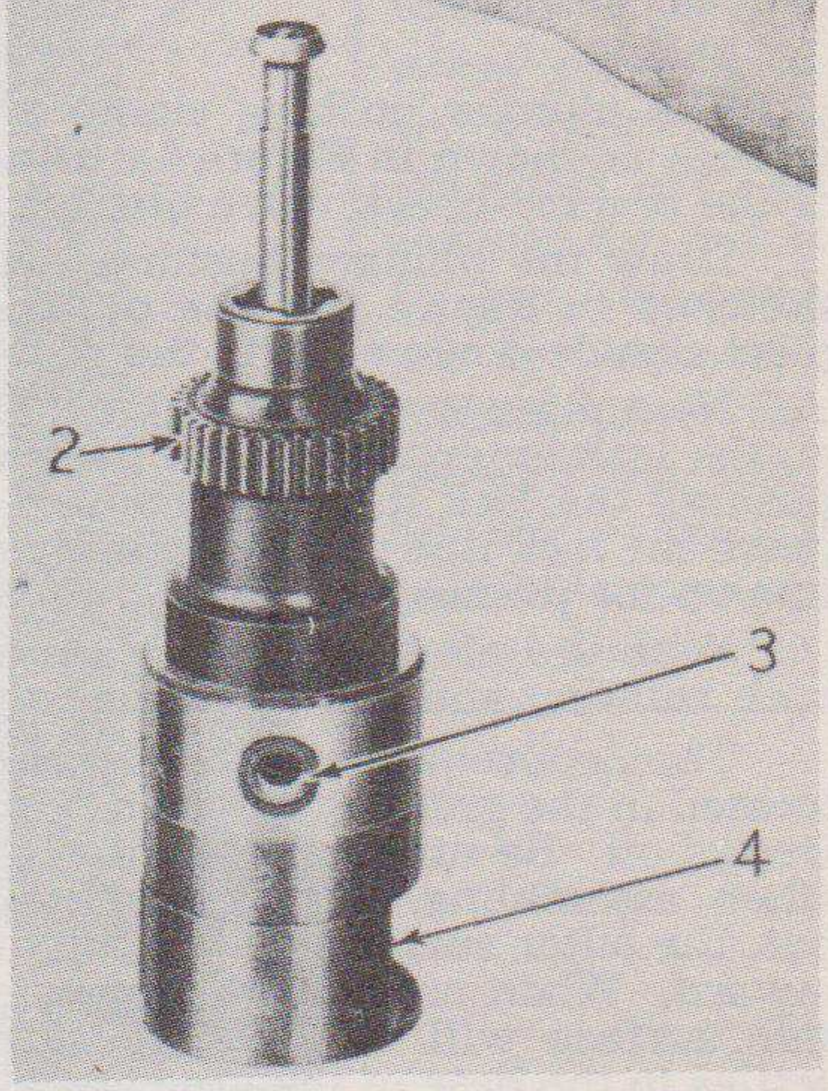

Fig. 49—Method of reassembling plunger unit parts to the plunger bushing retainer. (1) Hole in plunger bushing retainer. (2) Double-width tooth space on plunger control gear. (3) Plunger bushing screw tapped hole to be lined up with hole (1). (4) Flat face of reverse-check valve block parallel with plunger bushing screw tapped hole.

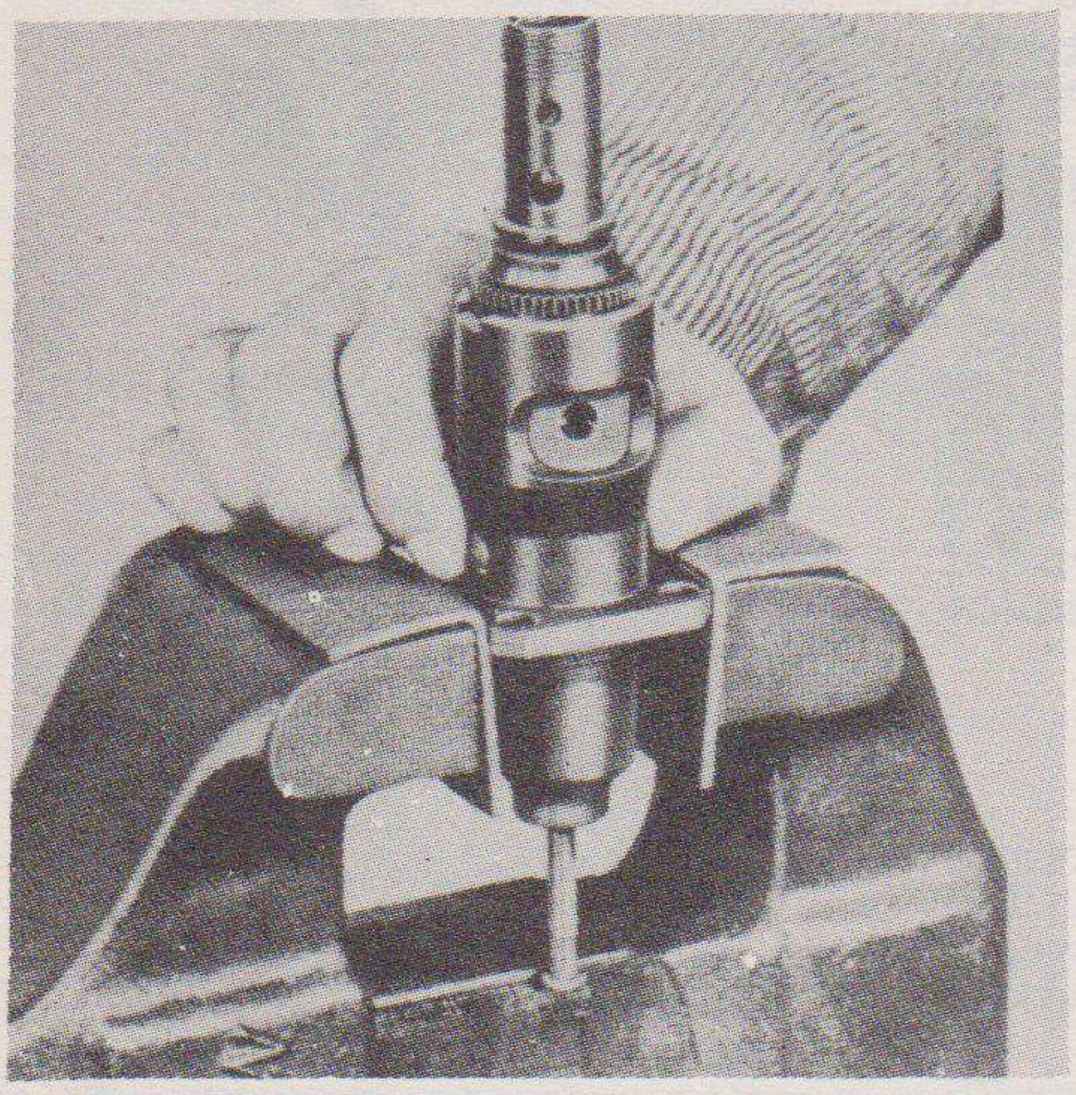

Fig. 50—Checking plunger unit for binding before tightening plunger bushing clamp.

in the two plunger bushing screws with their gaskets. Be sure they are tight with a hand screw driver application only. Then, as shown in Figure 50, see if the plunger bushing can be oscillated in the retainer, making sure the screws do not in anyway bind on the sides of the holes in the retainer.

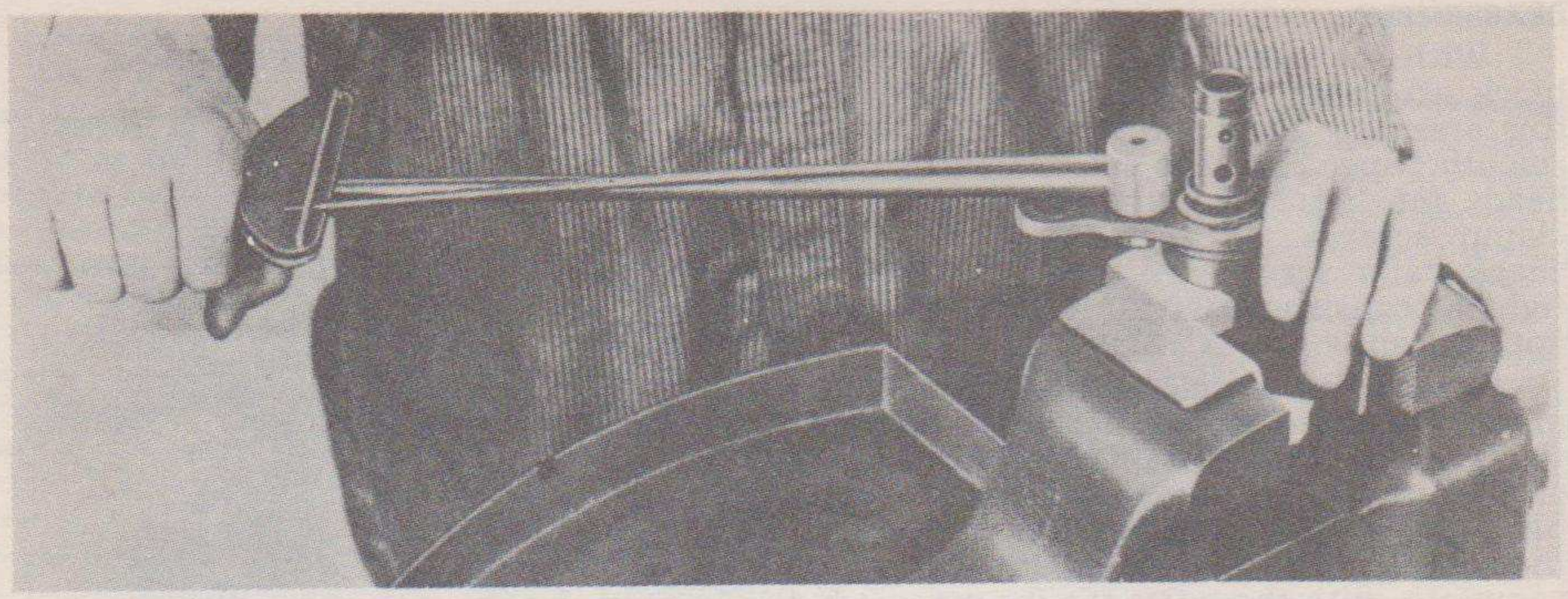

Fig. 51—Tightening plunger bushing clamp to 50 Ft.-Lbs. torque. Note block and method of holding unit in a vise for tightening.

The plunger bushing clamp can now be turned down and drawn tight with a wrench as shown in Figure 51, using a narrow block of hard metal to line up the face of the reverse-check valve block with the opening in the plunger bushing retainer.

Draw the plunger bushing clamp to 50 ft. lbs. torque with the special wrench sketched in Figure 40. The plunger bushing clamp lock will have to be settled in place upside down or with the prongs up to make the wrench work.

Next place the clamp lock over the clamp and settle it down in place so the prongs on the lock enter the slots in the plunger bushing retainer. If serrations do not allow pushing the lock into the retainer when tightened to 50 ft. lbs., use more torque to make the lock line up properly. Up to 70 ft. lbs. torque may be used to make serrations line up for pushing or tapping the lock into place.

With the plunger bushing clamp in place, check the plunger for free movement both rotating and reciprocating in all positions.

The neoprene seal (2), Figure 33, can be located in the groove (7) when both parts are free of oil. Be sure to have the right side out when assembling. When the seal is inside out, the outer surface will be slightly curved inward. When assembled properly, the outside surface will be flat. Be sure the seal settles to the base of the groove.

With the plunger unit assembled, the plunger spring and seat can be attached as shown in Figure 3. Pull the plunger all the way out, set the spring against the plunger bushing retainer and compress the spring with a tool such as SE-1308 to hold the spring compressed while the spring seat is slipped in place. With the spring in place, lay a straight edge on the spring seat. The end of the plunger should be .001" to .0035" inside the straight edge.

REPLACEMENT

A replacement plunger unit or a serviced plunger unit can be quickly installed. The alignment of the plunger unit and its engagement with the control rack is an exacting operation.

As shown in Figure 54, the double-width tooth space (1) must engage the double-width tooth (2) of the control rack when both are

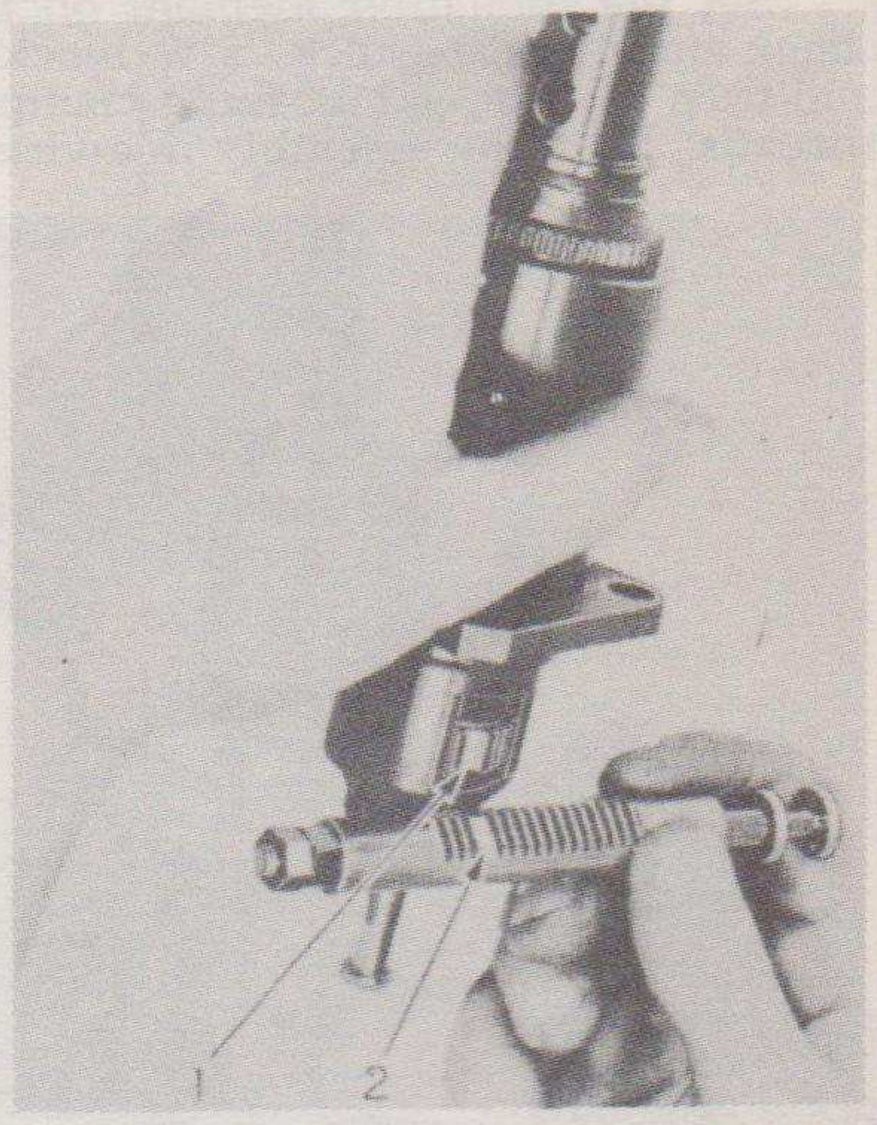

Fig. 54—Plunger unit and its control rack showing mating points of plunger control gear and control rack. (1) Double-width tooth space of plunger control gear. (2) Double-width tooth on control rack.

INJECTION PUMP SERVICE CHART

Fitting for connection to auxiliary cleaner attached to air cleaner allows scavenging pump to draw clean air when there is insufficient return fuel oil to meet the capacity of the scavenging pump.

Distributor valves and blocks should hold **2,500** lb. per sq. in. when oil pressure is applied at high pressure pipe tapped hole in upper distributor block.

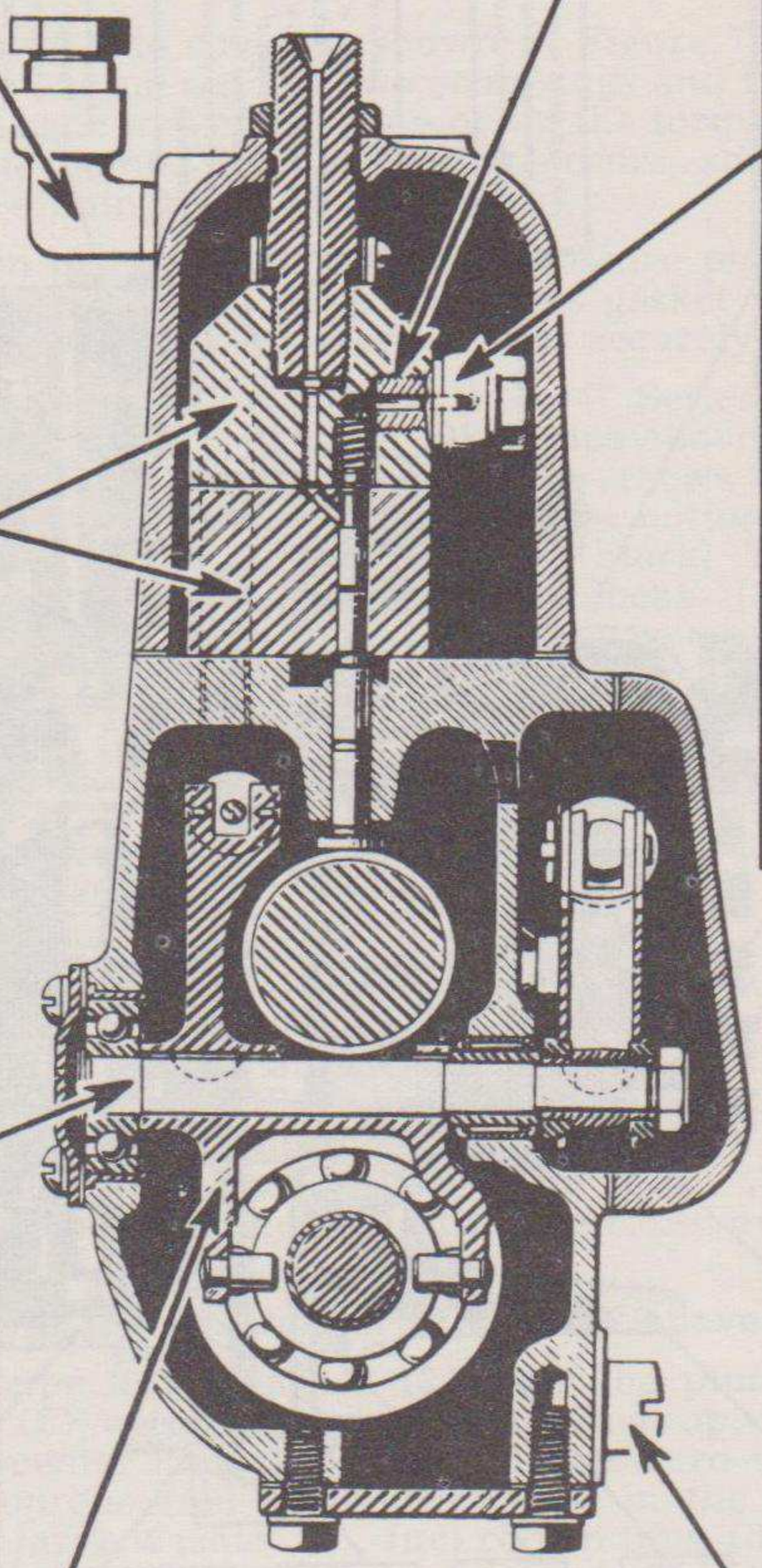

Distibutor unit may be removed, if necessary, while pump is mounted to the engine. Remove pump housing cover, high pressure pipe, discharge fitting locks, and nuts from studs. Entire unit can be lifted off. For further details refer to distributor unit service chart. Check distributor unit as well as plunger and primary pump when uneven fuel delivery occurs.

Fuel oil injected by the plunger unit is conducted to the distributor unit by the high pressure pipe. Tapped holes in upper distributor block and in reverse check valve block of plunger unit having a flat bottom require high pressure pipe screws with a flat end. Those with a tapered bottom should use screws with a tapered end although flat end screws may be used. Tapered end screws must not be used in flat bottom tapped holes. Brass gaskets (**4**) used with screws must be flat and smooth. Inspect for leaks when pump is tested with pump housing cover removed.

Governor fork shaft can be removed after taking off governor spring unit, torque control unit, and back cover. Press shaft with bearing and retainer out back side of pump housing.

Fig. 52—Complete injection pump Service Chart—front view.

Governor fork can be removed after governor fork shaft and governor shaft unit are removed.

Scavenging valve assembly can be removed after taking off valve body cap and pulling the body and valve using a special tool. Scavenging valve tappet and guide then come out. See scavenging valve service chart for further details. Test for leakage after assembly.

INJECTION PUMP SERVICE CHART

Pump housing cover can be removed after removing fittings from plunger unit, tubing to air cleaner, injection pipes, nuts on discharge fittings, and oil filler neck. When replacing cover use good quality sealer on both surfaces of gasket. Damaged seals on the discharge fittings and plunger unit should be replaced.

Mounting flange is held to pump housing with socket head capscrews. Copper dowels in holes adjacent to capscrew heads are used for locks. Use a punch to spread the locks when capscrews are tightened. Use good grade of seller on both sides of gasket when assembling flange to pump housing.

Tapped holes in camshaft gear allow a puller plate such as **SE-662** to be used for pulling gear from shaft. Remove governor shaft pinion nut before pulling gear.

Ridged side of double lip leather oil seal enters pump mounting flange first. When assembled, it should touch retaining flange.

Self locking nut holds gear hub to camshaft, it should be tightened to **75-85** ft. lbs. torque. Hold hub when removing or tightening nut. Standard puller may be used to remove hub from shaft.

Camshaft can be pulled out by hand after taking off gear hub, mounting flange, governor shaft pinion nut, camshaft gear, and bearing retainer. Housing should be inverted while doing so. Tappets may then be removed individually and kept in order. Be sure to wire heads of capscrews when reassembling bearing retainer to pump housing.

Be sure to use only a **⅜"** length mounting screw at this point when mounting pump to the engine.

Governor shaft unit can be removed after taking off primary pump, gear hub, mounting flange, governor shaft pinion nut, camshaft gear, camshaft bearing retainer, plunger unit, and governor fork shaft. Disengage governor fork from control rack and press unit out front end of pump. See governor shaft unit service chart for further details.

Fittings on top of plunger unit can be removed after taking off fuel return pipe cap and copper washer, fuel return pipe screw on back side of pump housing, fuel return pipe and copper washer, and fuel inlet fitting with neoprene seal and copper washer. When replacing, be sure copper washers are flat and smooth, neoprene seal settles in groove on top surface of fuel inlet fitting, fuel inlet fitting points at **30°** with the centerline of the pump toward the rear and back side of the pump, and fuel return pipe cap is drawn down to **75** ft. lbs. torque. Use no more torque to prevent any leakage at these fittings. Tighten fuel return pipe screw before tightening the cap.

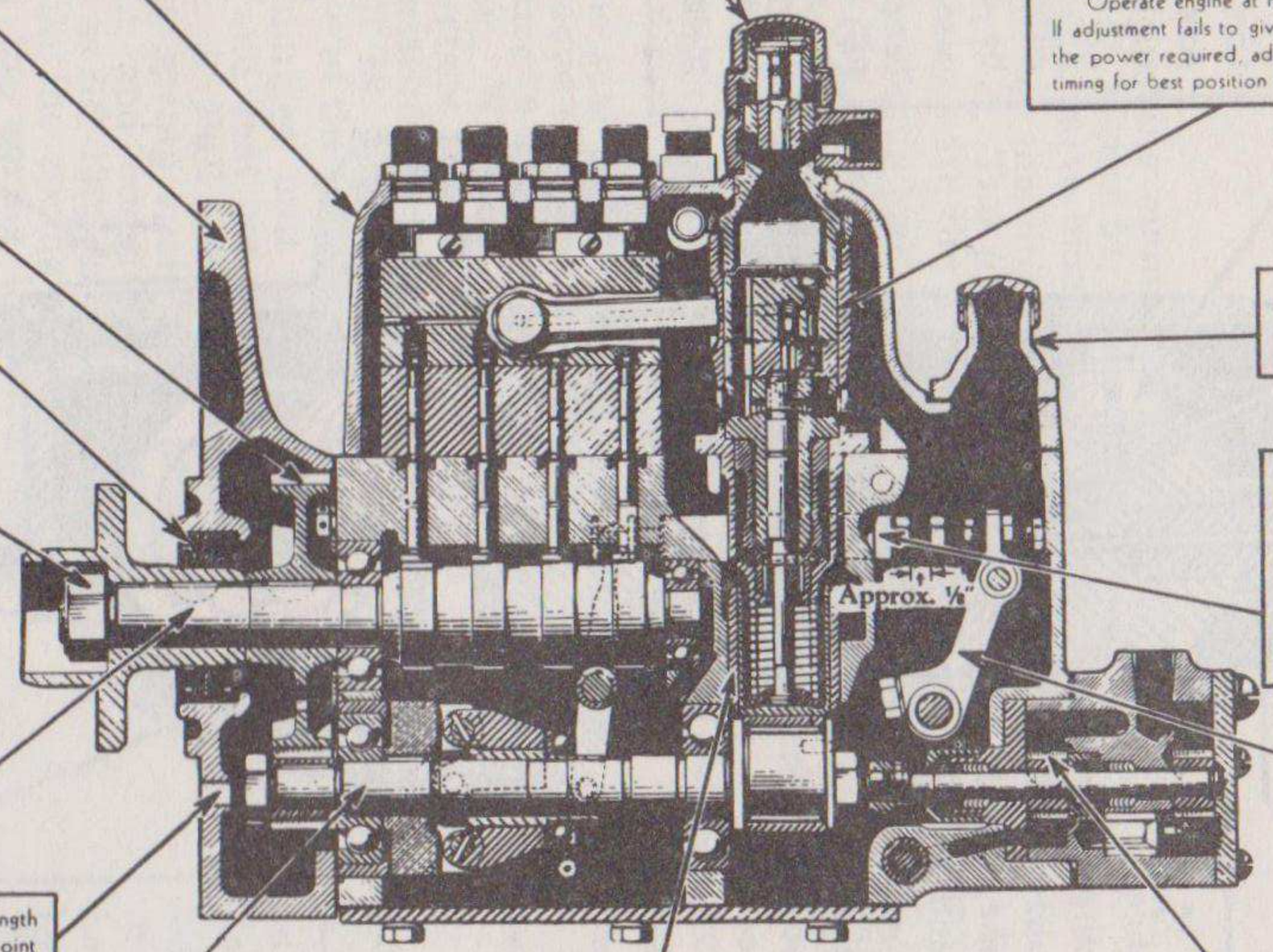

Plunger tappet and bushing may be removed when plunger units, and control rack are removed. Outside diameter of the tappet is finished to **1.1235-1.1240."** Clearance between tappet and bushing is normally **.001-.002."** If bushing must be replaced, it must be jig-bored to **1.1250-1.1255"** after pressing it in place **1⅜"** below top surface of the housing. Approximately **.007"** stock must be removed. Unless a jig-bore is available, replacement should not be attempted.

With pump on or off the engine, plunger unit can be removed after taking off fittings on top of plunger unit, housing cover, high pressure pipe and four nuts holding plunger bushing retainer to the pump housing. Fuel return check valve can be inspected by only removing fuel return pipe cap and taking out snap ring.

With plunger spring removed, plunger should be free for both reciprocating and oscillating motion. See if plunger tappet slides freely in tappet bushing in housing. When replacing plunger unit, turn cam on governor shaft to the lowest position, hold control rack so the double width tooth is centered in the plunger unit opening in the housing, turn control gear on plunger unit so the double width tooth space is in a central position with respect to the opening or cut-away section of the plunger bushing retainer, and then lower plunger unit into the pump housing. Unit will rest about **.040"** above final position. Press down against spring pressure and attach nuts to studs. With governor spring assembly removed, move torque arm to check for free control rack movement while rotating the pump. Shift plunger unit slightly to obtain best position. See plunger unit service chart for further details.

Operate engine at high idle speed. Adjust high idle speed stop screw to obtain idle speed desired. If adjustment fails to give high enough speed, adjust control rack to give speed desired. Then to get the power required, adjust torque arm stop screw attached to side of pump housing. Recheck pump timing for best position and if necessary readjust shut-off stop screw for stopping engine.

Two capscrews in oil filler neck attach directly to the injection pump housing. Capscrew head on front side of pump is drilled for sealing wire connected to side cover socket head capscrew.

Control rack may be removed after taking out governor fork shaft, plunger unit, and expansion plug in rear end of pump housing. Normally space between adjusting nut and lock nut is approximately **⅛."** Outside diameter of round portion of the rack is **.5610-.5615"** and has **.001-.002"** clearance in the housing. Backlash of rack with teeth of plunger control gear is **.002-.004"** when assembled to pump housing. Movement of rack must be absolutely free. Be sure to engage spool of the rack in upper arm of the governor fork when reassembling.

Governor spring lever can be removed after governor shaft is removed, socket wrench is inserted through holes in the base to remove lock nut, and taper pin is driven from the lever. Pulling hand control lever shaft from the housing frees the lever. When ever adjustments are made on the stop screws, be sure to draw locking nut tight.

Primary and scavenging pump unit may be removed complete while injection pump is mounted on the engine. Disconnect fuel lines, remove two large head screws in back cover of pump, and pull the unit from the housing. Coupling on end of drive shaft fits over square end of governor shaft. Two holes in small round gasket of primary pump unit must register with holes in bearing cage and mating holes in the injection pump housing. Hold pump in position with long screws in place and turn injection pump gear hub to make coupling engage. Tighten long slotted head screws with hand turning only, do not use a wrench on the screwdriver. Then recheck the four smaller screws. Pressure gauge attached to top of final fuel filter or to outlet of primary pump should register **35-40** lbs. with injection pump turning at operating speeds. See primary pump service chart for further details.

Fig. 53—Complete injection pump Service Chart—side view.

assembled to the pump. The position of the double-width tooth of the control rack must be centered with respect to the plunger unit bore in the pump housing. This can be done by inserting a finger through the rear opening in the top of the pump housing and moving the control rack to the position required.

Turn the control gear so that its double-width tooth space is centered in the cutaway of the plunger bushing retainer. With the rack and gear in these definite positions, the correct engagement of the wide tooth and its mating space will be obtained when the plunger unit is lowered into the bore of the pump housing.

With the eccentric on the governor shaft in its lowest position, the plunger unit will rest about .040" above its final position until it is pushed down against the pressure of the plunger spring.

Hold the plunger unit down and move the control rack back and forth to make sure the rack and gear are properly engaged. Turn down the nuts on the four studs to hold the unit in place.

Remove the pump housing side cover as shown in Figure 70. Then remove the governor spring assembly by taking out the two snap rings and the pin in the torque control arm. Check the free rack movement by moving the torque control lever back and forth while rotating the pump. If any binding occurs, shift the plunger unit slightly until the binding is eliminated.

With the plunger unit in place, attach the high-pressure pipe (6), Figure 33, to the plunger unit and distributor block, using one brass gasket (1) on each side of both end fittings. Draw down the high-pressure screws securely.

On pumps with serial number below 804 for the "14" Series pumps, the ends of the high-pressure pipe screws (5) are flat. On all pumps above this serial number, and on all service-part check valve blocks, complete, the screws (5) must be tapered, at 30° at the end. This taper will match the taper in the bottom of the hole in the reverse-check valve block and in the upper distributor block. The screws with the tapered end may be used with all reverse-check valve blocks. If a screw runs tight, before the brass gasket is held tight, inspect the bore in the reverse-check valve block. If the bottom of the bore is tapered, use a tapered-end screw. Attempting to tighten the flat-end screw may crack the reverse-check valve block. Refer to the "Distributor" chapter for similar treatment of the hole in the upper distributor block.

If a pump is to be tested on the flow bench, replacement of the housing cover is unnecessary. Fittings (1), (2), (3), (4)((5), (6), and (7), Figure 30, may be assembled independent of the cover (15).

Inspect the neoprene seals on the discharge fittings of the distributor block and on the plunger bushing clamp. Replace if damaged. Be sure they are all settled in the grooves, and right side out. Attach the gasket cover (15), using a clean sealer. Lower the housing cover over the pump after clean sealer is applied to the lower surface of the gasket (17). Attach the oil filler neck, Items (9), (10), (11), (12), Figure 30, with the two capscrews and lockwashers. The capscrew with the hole in the head should be on the name plate side of the housing. Run down the four nuts on the discharge fittings, and tighten both the nuts and the two capscrews. Install dust caps on the discharge fittings.

The sealing wire can be attached after all adjustments have been made.

Place the fuel return pipe large washer (2) over the plunger bushing clamp. Lower the fuel inlet fitting (5) with the groove for the seal up. Locate the threaded end at a 30° angle with the center line of the pump and toward the rear, engine side, of the pump. Seat the neoprene fuel inlet fitting seal in the groove in the inlet fitting before mounting the large washer (2), fuel return pipe (3), large washer (2), and finally the fuel return pipe cap (1). Tighten cap (1) to 75 to 85 ft. lbs. torque after the two small washers (6) are in position and the return pipe screw (7) is threaded into the pump housing. Then draw up the screw (7). The pipe cap (1) should not be loosened later to allow the fuel inlet fitting to line up with the piping on the engine. The pipe fitting for the breather connection to the air cleaner must be in place where the plug (21) is shown in the pump housing cover (15), before pump is assembled to the engine.

ADJUSTMENT

After replacement of the plunger unit is complete, no adjustments of the plunger unit itself are possible. If control rack settings have been disturbed prior to assembly of a new or overhauled plunger unit, only operation of the pump on an engine,

preferably after a flow bench test, is necessary to get all adjustments back to normal.

A flow bench test as detailed in the first chapter is recommended at all times before assembling the pump housing cover and before assembly of pump to an engine.

If stop screws on the governor spring lever have been changed, similar handling is recommended. However, if the torque control set screws on the side of the pump housing have been disturbed, a complete dynamometer test similar to that used at the factory must be performed before sealing the pump. This also holds true for adjustments involving the control rack, governor spring lever, and torque control. Factory setting only can assure correct torque characteristics of pumps so altered. Refer to the "Governor" chapter for a complete explanation of the function of the parts making up the governor unit. The following adjustments are limited to field conditions.

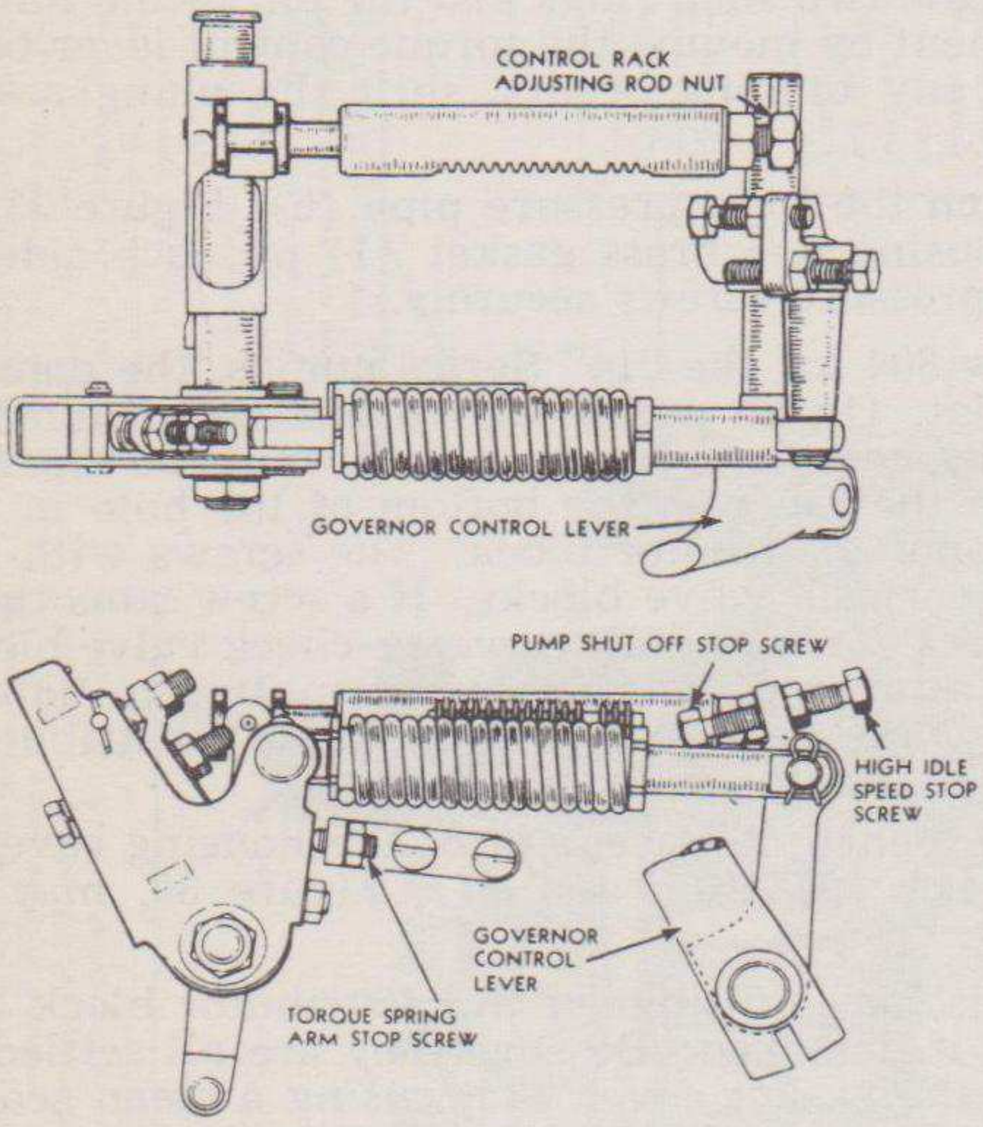

Fig. 55—Points that may require adjustment after replacing plunger unit.

Operate the engine and check the high idle speed. If the high idle speed is too high, turn the stop screw out of the governor spring arm to get the speed desired.

If the speed is low, loosen the lock nut on the high idle speed stop screw and turn the stop screw into the governor spring arm until the correct speed is obtained with the stop against the housing. Hold back the governor control lever to do so. Be sure to lock the screw in the correct position.

If this adjustment does not give the high idle speed desired, remove the pump side cover to make sure the rear end of the governor spring assembly does not strike the housing. If this is the case, stop the engine, turn out the stop screw in the governor spring arm at least one turn to give some clearance between the rear end of the governor spring assembly and the pump housing. Now loosen the lock nut on the control rack and turn the adjusting rod one turn into the control rack. Start the engine, recheck the fast idle, and, if necessary make additional settings of the control rack adjusting rod to give the fast idle desired.

In adjusting the control rack use caution that the adjusting rod is not turned into the control rack too far. If this is done, the governor cannot shut off fuel to the engine, and the engine will run away. If this occurs, stop the engine by converting to the gasoline cycle with the gasoline supply shut off. Recheck adjustments, and if they were made in order, return the pump to the factory if the condition persists.

After adjusting the high idle speed, place the engine under load. If the power appears low, turn out the torque-arm stop screw attached to the pump housing one turn. If the power seems too high, turn in the stop screw one turn.

Be sure to lock all screw adjustments after they are made. Make no attempt to alter the settings of the torque control. The adjustments have been accurately set at the factory, and the replacement of the plunger unit does not change the engine characteristics. See the "Governor" section for thorough explanation of the governor operation.

Adjust shut-off stop screw so that the control lever moves a few degrees after the injection of fuel to the cylinders is shut off. Anytime the control rack is adjusted, the shut-off ability of the pump should be inspected.

DISTRIBUTOR UNIT

DESCRIPTION AND OPERATION 100
REMOVAL 101
DISASSEMBLY 101
REPAIR 103
REASSEMBLY 104
REPLACEMENT 106
TEST 107

DESCRIPTION AND OPERATION

The distributor is a self contained unit. It is composed of the distributor valve lower block and valves, the distributor valve upper block and springs, and the discharge fittings. The discharge fittings are locked in position with semi-circular serrated locks. Four capscrews clamp the lapped faces of the two blocks together and four studs hold the distributor unit to the top of the injection pump housing.

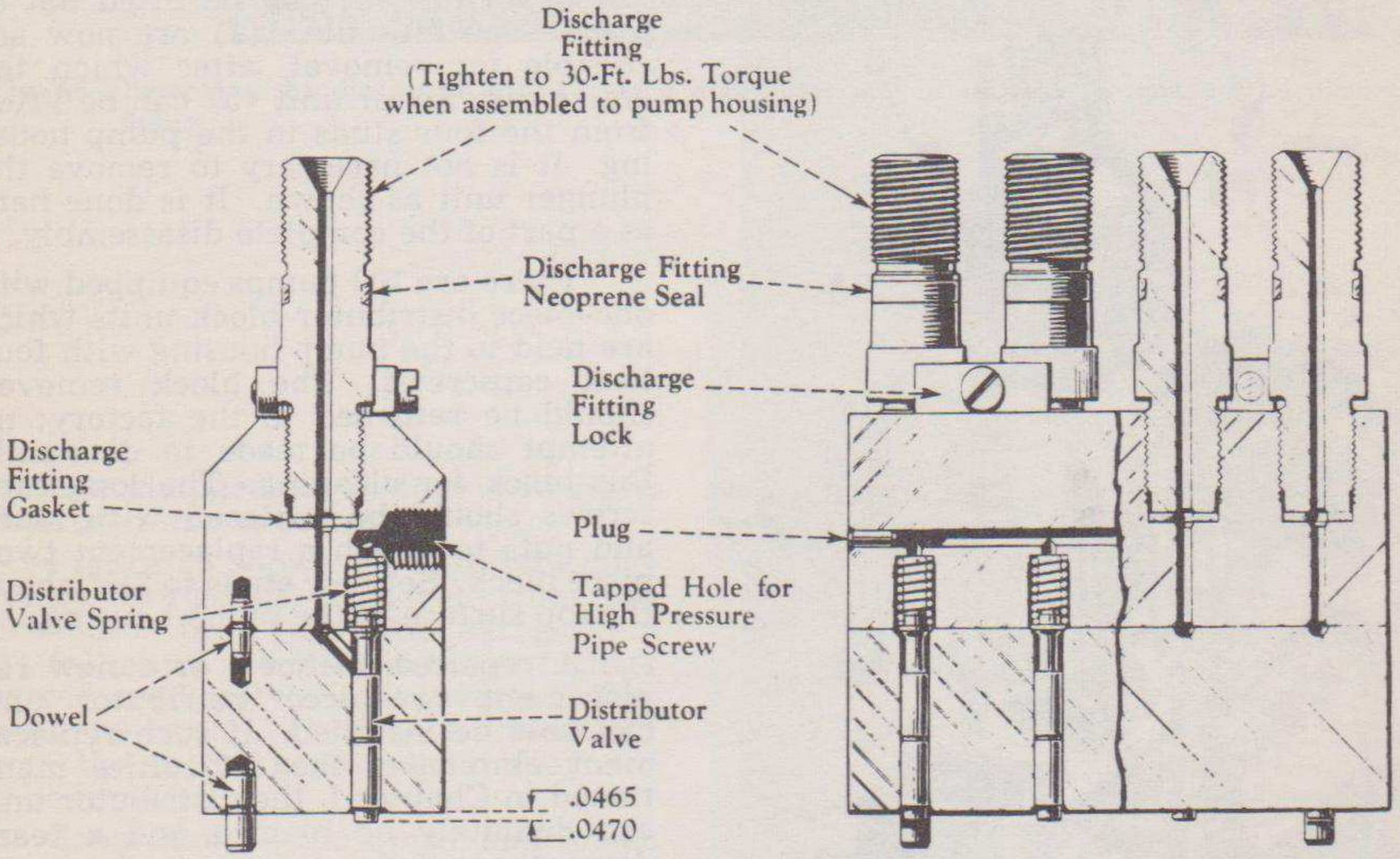

Fig. 56—Cross-section of distributor unit.

The high-pressure pipe, with its gaskets and hollow capscrews, provides the passage for the fuel from the plunger unit to the distributor block. The manifold in the distributor valve upper block conducts the fuel to the distributor valve.

The camshaft in the pump housing actuates four tappets which contact the four distributor valves of the distributor unit. The camshaft lifts the distributor valve off its seat approximately 10° of pump rotation before fuel injection starts. The distributor valve is returned to its seat by its spring, approximately 10° ofter injection of the fuel to that cylinder is completed. The valve opened by the camshaft determines which discharge fitting in the firing order (1-3-4-2) receives the fuel injected by the plunger unit. Injection pipes attached to the discharge fittings carry the Diesel fuel to the nozzles in the cylinder head of the engine.

Inasmuch as a single plunger supplies the fuel for the four cylinders there is no need for individual calibration. The only function of the distributor unit is the transfer of the injected fuel to the proper cylinder.

Any variation in the amount of fuel delivered to any cylinder, if not caused by defective nozzle or injection pipe, can usually be traced to a sticky distributor valve,

dirt on a distributor valve seat, a leaky valve or leakage between the distributor valve blocks. When unequal distribution of fuel is encountered, thoroughly clean and inspect the distributor unit. Test as outlined at the end of this section.

REMOVAL

Like the plunger unit, the removal of the distribuor unit while the injection pump is still on the engine depends on the removal of the fuel return pipe screw on the back side of the pump. Be sure all external parts of the pump are thoroughly cleaned before proceeding.

The housing cover must be removed first, as outlined under the "Removal" procedure for the "Plunger Unit" and as shown in Figures 30 and 31. With these items removed, the high-pressure pipe (19) can be removed by taking out the two high-pressure pipe screws (20).

On pumps below serial number 804 for the "14" Series pumps, the high pressure pipe screw has a flat end. On pumps above this serial number, the end of the pipe screw is tapered at 30°. Full details of these screws are discussed under "Repair" of the "Distributor Unit." Note the type of screws used while removal is in progress.

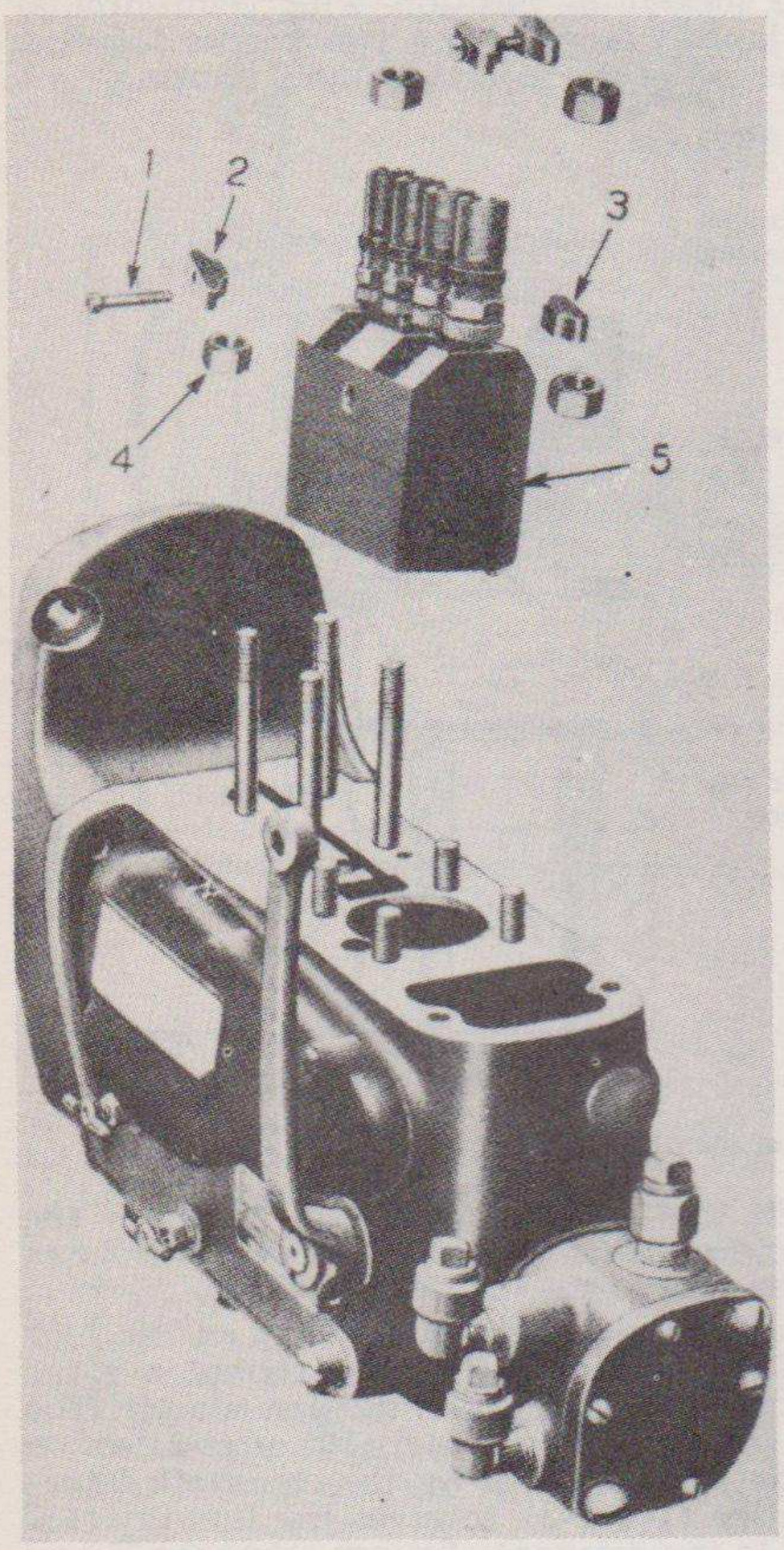

Fig. 57—Distributor unit removed from the injection pump housing. (1) Discharge fitting lock screw. (2) Discharge fitting lock. (3) Discharge fitting lock nut. (4) Nut for hold-down studs. (5) Distributor unit.

Referring to Figure 57, apply a screw driver to the two discharge fitting lock screws (1). With the screw loosened, the front and rear discharge fitting locks (2) and (3) can be lifted out of place. The four nuts (4) are now accessible for removal, after which the entire distributor unit (5) can be lifted from the four studs in the pump housing. It is not necessary to remove the plunger unit as shown. It is done here as a part of the complete disassembly.

There are 100 pumps equipped with one-piece distributor block units which are held to the pump housing with four long capscrews. The block removed should be returned to the factory; no attempt should be made to dismantle this block for cleaning. The long capscrews should be replaced with studs and nuts to attach a replacement two-piece block. Set new studs to $2\frac{15}{32}$" above the top surface of the pump housing.

A repaired, cleaned, or a new replacement two-piece distributor unit can now be installed. If such replacement eliminates the difficulties mentioned in Chapter I, the distributor unit can definitely be blamed and a teardown conducted to eliminate the cause in the distributor unit just removed, provided the one removed is not a one-piece distributor block unit.

DISASSEMBLY

The discharge fittings on some injection pumps can be removed with a box wrench as shown in Figure 58. Discharge fittings without any hexagonal portion, but with extended secretions can be removed with the aid of a special wrench as shown in Figure 62. This wrench is detailed in Figure 40.

Injection pumps with the $\frac{9}{16}$" hex on the discharge fittings having 36 serrations on a ½" diameter. Discharge fittings not having the hex have 36 serrations on a ⅝" diameter. The locks are

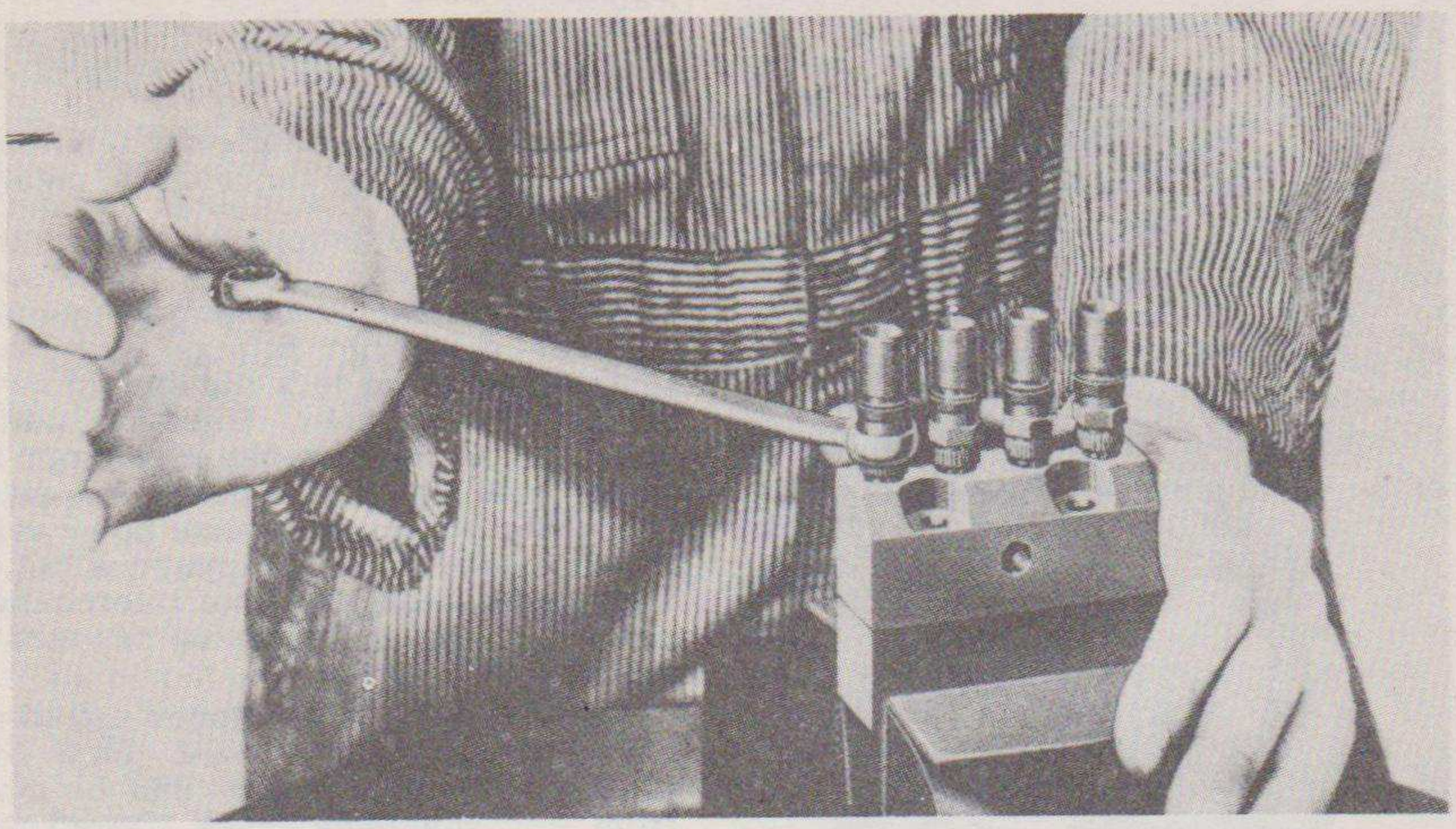

Fig. 58—Removing the discharge fitting from a distributor unit having a hexagon on the discharge fitting.

not interchangeable, so they will have to be used in sets of four.

Figure 59 shows the hex type discharge fittings (2) removed from the distributor unit (4). The flat gaskets (3) fall out when the discharge fittings are removed and the unit inverted. The neoprene seals (1) may be removed from the discharge fittings if they are to be replaced.

Separation of the upper and lower distributor valve blocks (1) and (4), Figure 60, can be accomplished with the removal of four distributor valve block clamp screws (5). This frees both the valve springs (2) and the valves (3).

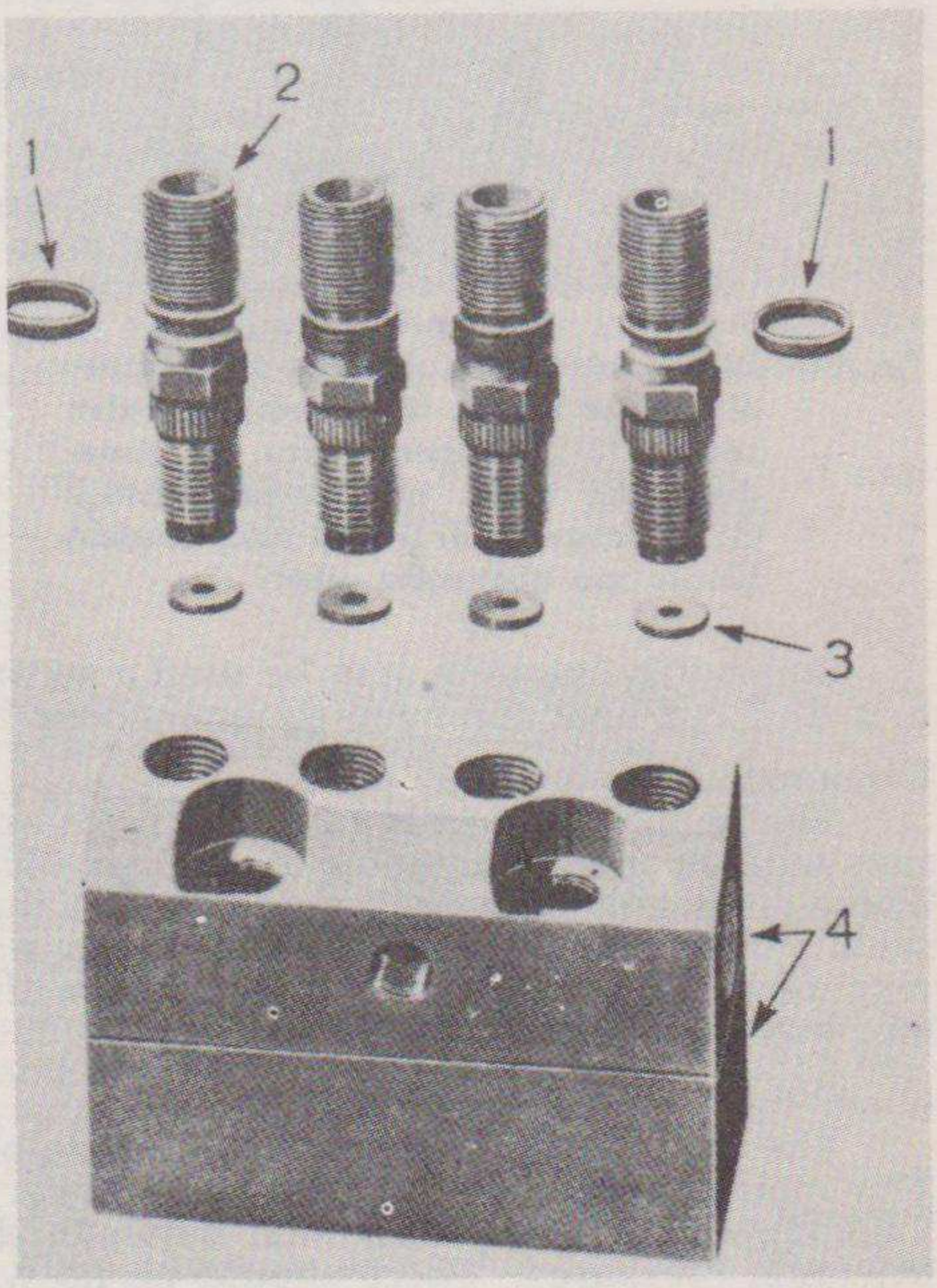

Fig. 59—Discharge fittings removed. (1) Discharge fitting seal. (2) Discharge fitting. (3) Discharge fitting gasket. (4) Distributor blocks.

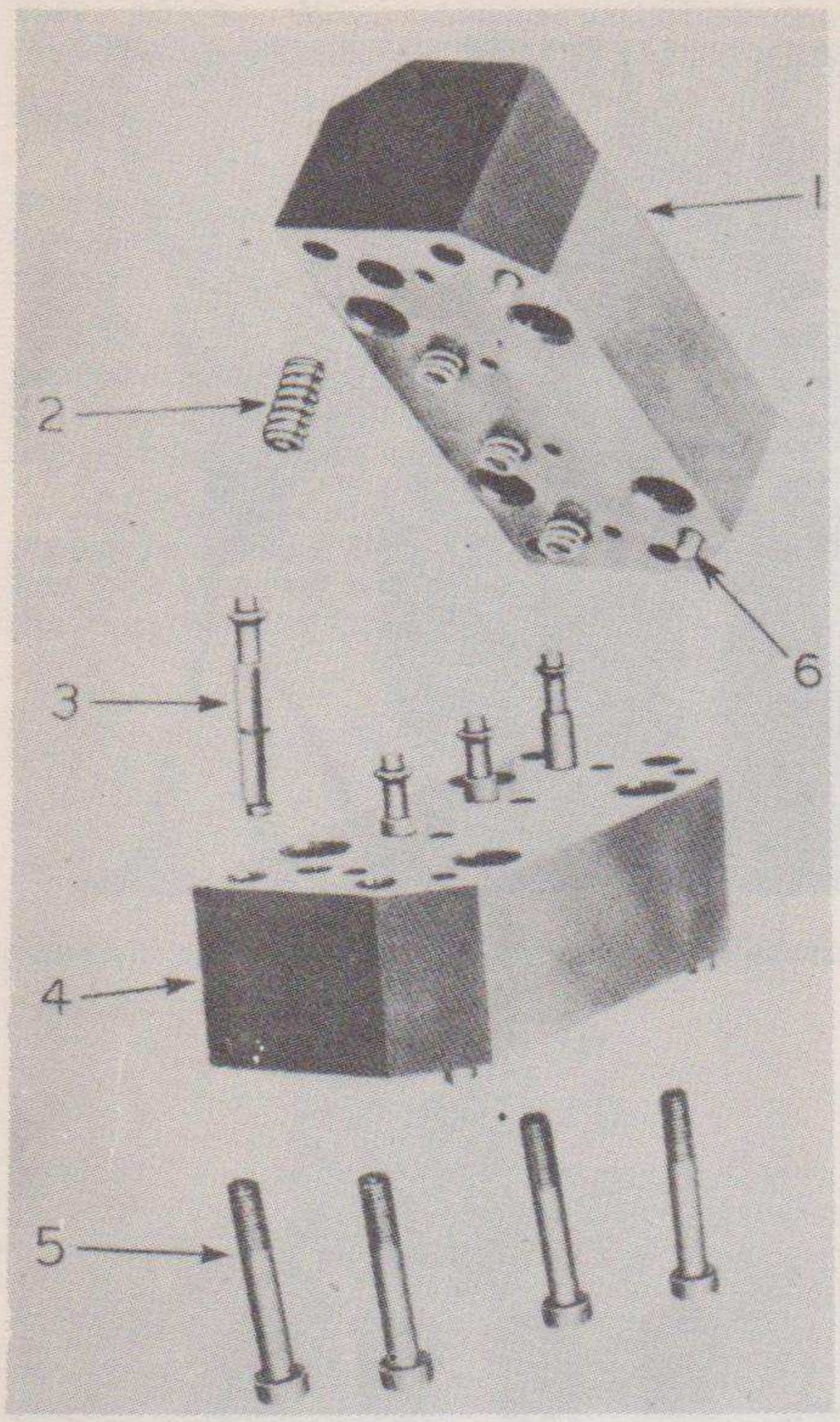

Fig. 60—Distributor blocks separated. (1) Upper distributor block. (2) Distributor valve spring. (3) Distributor valve. (4) Lower distributor block. (5) Distributor block clamp screws. (6) Dowel pins locating blocks one above the other.

Be sure to keep the valves (3) separated and in the exact order of removal so they may be replaced in exactly the same place in the block (4).

With the unit completely separated, all items may be thoroughly cleaned for inspection.

REPAIR

Discharge Fittings and Locks

The discharge fittings with their serrated lock and lock nut should never require replacement. Injection pumps with the $\frac{9}{16}$" hex on the discharge fittings have 36 serrations on a ½" diameter. Discharge serrations not having the hex have 36 serrations on a ⅝" diameter. The locks are not interchangeable, so they will have to be used in sets of four.

The thread on the upper end of the discharge fitting is $\frac{9}{16}$"-24. Dust caps for the discharge fittings can be made from $\frac{11}{16}$" diameter stock, bored and threaded about $\frac{7}{16}$" deep.

Discharge fittings may be removed while holding the distributor block assembly in a vise; they should not be assembled and tightened unless the block is set over the studs in the pump housing and nuts drawn down tightly. Never hold the block in a vise to tighten the fittings.

Discharge Fitting Gasket

The gaskets used with the discharge fittings to seal the high injection pressures are made from a .050"-055" brass sheet cut to .432" to .437" outside diameter and to ⅛" inside diameter. Both surfaces of the gasket must be smooth to make a good seal. If the pump is operated on a test bench prior to assembling the housing cover, any leakage at this point can be observed.

Ordinarily, gaskets may be used a second time; they may be tempered by heating to a dull red heat followed by quenching in water.

Discharge Fitting Seal

The neoprene discharge fitting seals are accurately made to .118" to .132" thickness with an inside diameter of .463" to .468" and an outside diameter of .557" to .572". These seals are accurately made so that the housing cover may be lowered over the seals without tearing them. The under side of the holes in the housing cover are chamfered to make a snug fit possible without injury to the seal. Seals damaged in any way should be replaced.

Distributor Valves and Block

The distributor valves and block are obtainable only as a unit as a service part. The mating surfaces of the blocks are very accurately lapped smooth and straight. This lapped fit is the only seal between the two pieces and it must hold the high injection pressures. There should be no wear on this unit, but if the valve seats in the lower block become pitted, the pits may be removed by applying a light coating of fine grinding compound (Norton Alundum No. 600X, preferably, or Carborundum H-400) to the valve and by turning the valve lightly on the seat. Be sure none of the compound touches the stem part of the valve where it slides in the block. Clean both the valve and block thoroughly after such handling.

The angle of seat on both the valve and block is 45°. The width of the seat is .012" to .015". Both the valve stem and the block are finished to .1875" diameter and

lapped to a mirror finish with the same type of fit as that found between the plunger and bushing. The stems are individually lapped to each hole; then the valve seats are lapped. With the valves held on the seats, the tappet ends are ground so they extend .0455" to .0480" from the base of the valve block.

The rise of this valve is only .012" to .015". The normal clearance between the ends of the valve tappets and the tappet end of the distributor valves, when the distributor is tightened to the pump housing is .005" to .008". Three of the valve seats must hold against the injection pressure while a fourth valve is open. On the valve which is open, the stem portion must likewise hold this pressure. If any valve is damaged, the entire block assembly must be replaced.

The dowel pins (6), Figure 60, accurately locate the blocks one above the other. Dowel pins in the lower block accurately locate the assembly on the pump housing.

The upper distributor block on pumps with serial numbers below 804 for the "14" Series pumps have the flat-end high-pressure pipe screws. Pumps with serial numbers above this, use the screws with the tapered end. See the "High-Pressure Pipe Screw" heading.

Distributor Valve Spring

The distributor valve springs are obtainable as individual service parts. Springs should be checked against specifications and those not measuring $\frac{7}{16}$" when loaded with 16 lbs. should be discarded. The ordinary free length of these springs is .518" to .523". Springs may take a set from continued use, but still test correctly. Such springs need not be discarded.

High-Pressure Pipe and Gasket

Refer to this heading in the "Repair" section of the "Plunger Unit" for complete discussion.

High-Pressure Pipe Screw

The high-pressure pipe screws used on pumps with serial numbers below 804 for the "14" Series are different than those used on later pumps. This change was made at the same time the check valve block was changed, accommodating the new screw. The base of the tapped hole in the upper distributor block is flat on the pumps below the serial number listed, accommodating the flat end of the older screw. The newer type screws have a tapered end and the hole in the block is tapered to accommodate it. The new screws can be used for the old or new blocks but the old screws cannot be used with the new blocks. With an older type screw assembled to a newer style block, the screw will enter with hand turning until it bottoms on the taper in the hole; the high-pressure pipe and gaskets will be loose. Do not attempt to tighten further or the block may be cracked as a result.

Old screws can be made into the new style by grinding .010" from the end and grinding a 30° chamfer on the ends so that the distance from the underside of the head to the chamfer is .748" to .750".

REASSEMBLY

After all parts and passages of the assembly have been cleaned, dip the distributor valves (3), Figure 60, in clean fuel and drop them in their respective hole in the lower distributor block (4). Be sure each valve moves freely in the hole from which it was removed. Place all the valve springs (2) in the upper distributor block (1). Assemble both blocks together and secure with the four screws (5). Be sure the dowel pins locate each block and the mating surfaces are absolutely clean before assembling. The ends of the valves should protrude .0455" to .0480".

Neoprene discharge fitting seals requiring replacement should be assembled to the discharge fittings when both are dry and free of oil. Be sure they are right side out. Seals incorrectly assembled will have a slightly hollowed outside face while those correctly seated in the grooves will have a flat outer surface.

Place one brass discharge fitting gasket in each hole in the top of the distributor block followed by the discharge fitting. Turn them in as far as possible with the fingers. Assemble dust caps over the fittings if the unit is not to be assembled immediately to the pump housing. Do not tighten the fittings while holding the block in a vise.

The remainder of the reassembly of the distributor unit is completed as outlined in the replacement procedure.

990620 O—52——12

DISTRIBUTOR UNIT SERVICE CHART

Discharge fitting gaskets ordinarily may be used a second time; they may be tempered by heating to a dull red heat followed by a quench in water.

Discharge fittings should only be tightened when distributor is firmly assembled to the pump housing. Tighten fittings only to **30** ft. lbs. torque.

Neoprene seals should be assembled to the discharge fittings when both are free of oil. Seals incorrectly assembled will have a slightly hollowed outside face while those correctly seated in the groove will have a flat outer surface.

Tapped holes in upper block having a flat bottom instead of the tapered bottom shown require high pressure pipe screws with a flat end. Screws with the tapered end cannot be used in tapped holes with the flat bottom.

Free length of valve spring is **.518 - .523"** and should test **16** lbs. at 7/16".

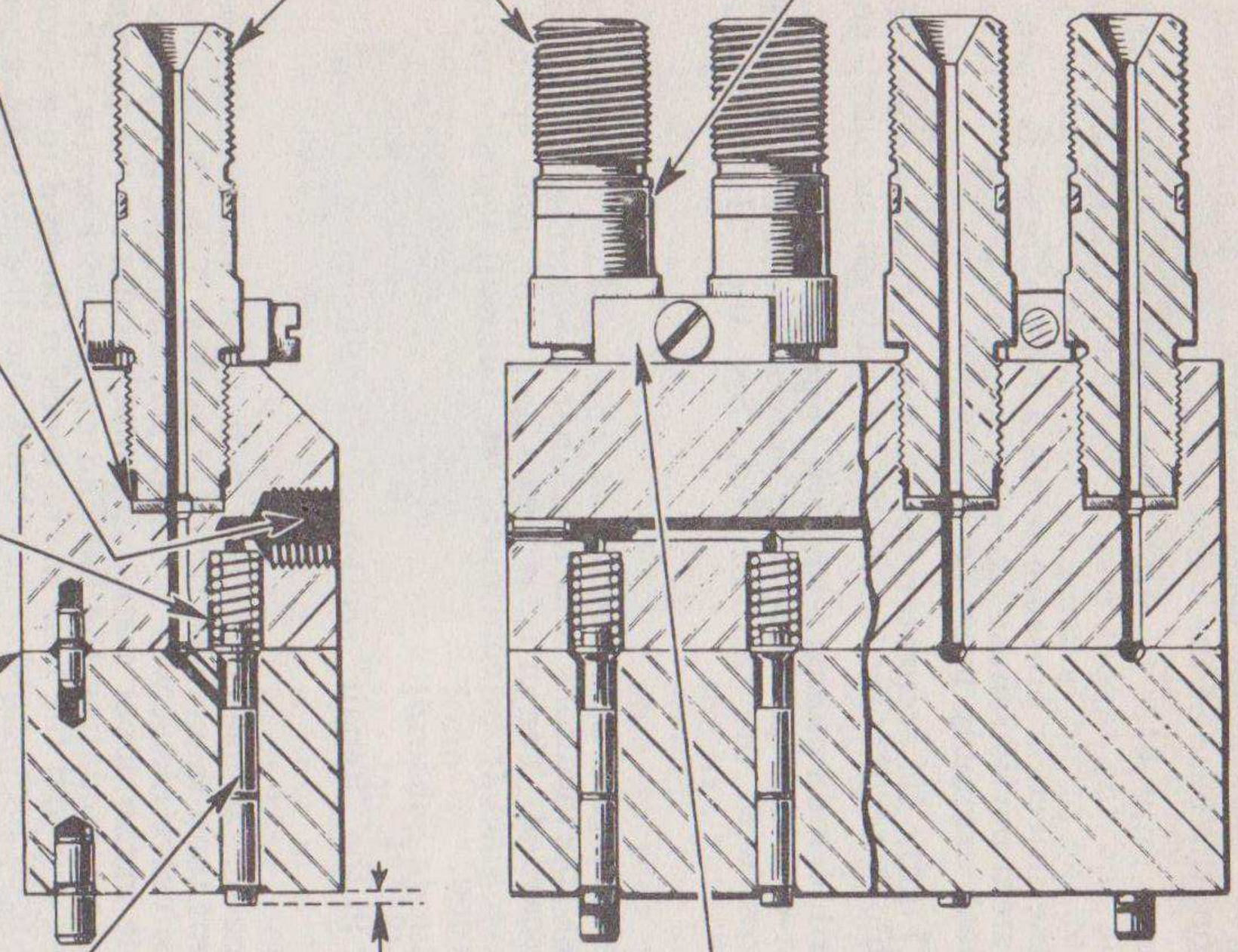

Mating surfaces of the distributor blocks are lapped to seal the injection pressures. These surfaces must be absolutely clean when assembling to prevent leakage. Four capscrews clamp the two blocks together.

A sticky distributor valve, a leaky valve, dirt on the valve seat or leakage between the lapped surfaces may cause uneven fuel delivery. No calibration of this unit is required; the same plunger supplies oil to all four cylinders. Distributor valves should hold **2500** lbs. per sq. in. oil pressure applied at tapped hole in upper distributor block.

When assembled, distributor valves extend **.0455 - .0480"** from base of lower block. Valve seats and stems of valves are finished to the individual bores in the lower block; keep all valves in exact order if they are removed. Camshaft opens valves approximately **10°** before fuel oil is injected by the plunger unit.

Discharge fittings with a 9/16" hexagonal portion have **36** serrations on a 1/2" diameter. Fittings not having the hex have **36** serrations on a 5/8" diameter. Special tool is required for their removal. The locks used are not interchangeable, so they will have to be used in sets.

Fig. 61—Distributor unit Service Chart.

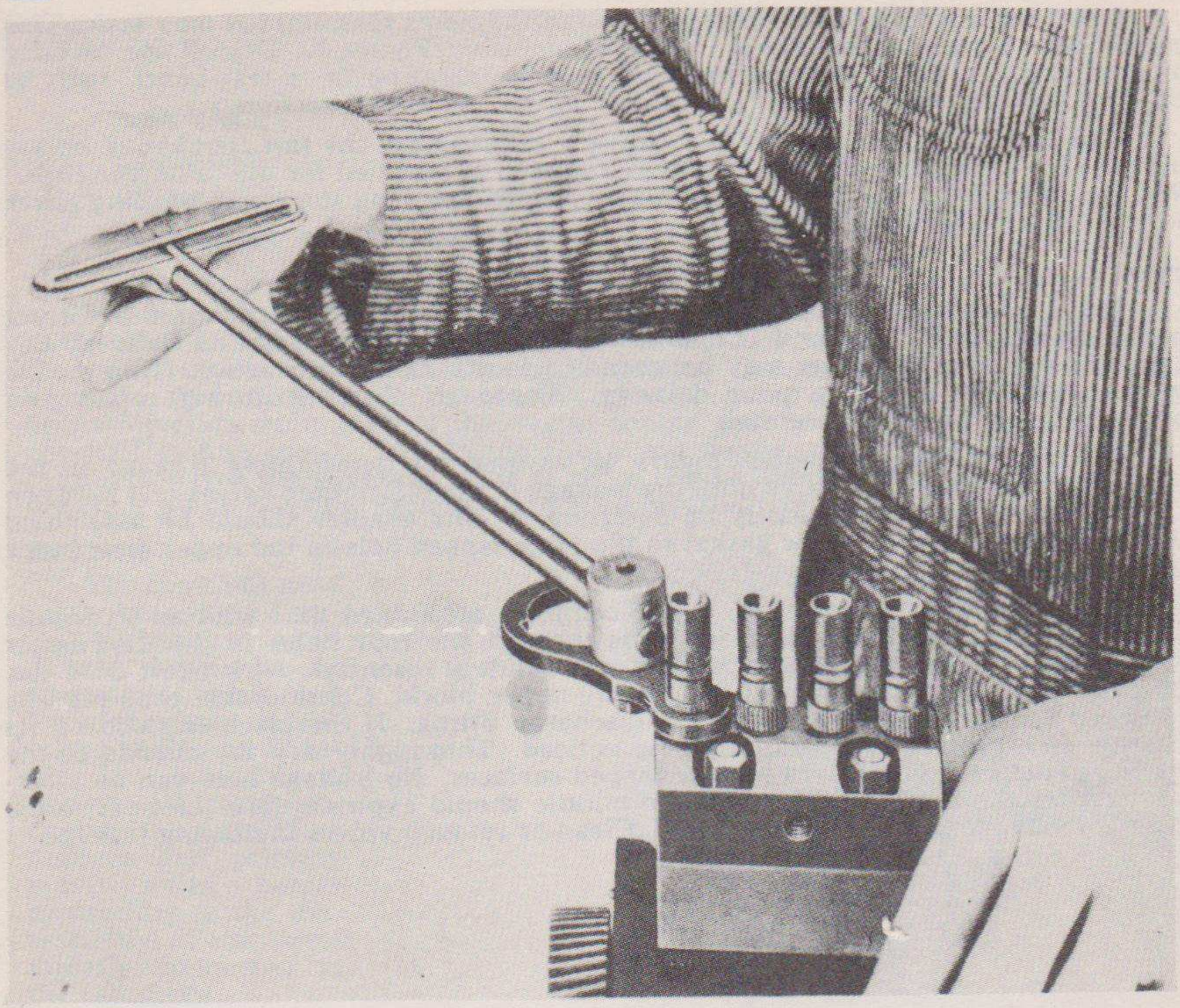

Fig. 62—Tightening discharge fitting to 30 ft. lbs. torque while distributor unit is assembled to injection pump housing. The special wrench is required on fittings not having a hexagon.

REPLACEMENT

With the two distributor blocks and the four valves and springs assembled, the unit can be placed on the pump housing and secured with the four nuts attached to the long studs.

Hexagonal style fittings may be tightened with a box wrench, using a spring scale to determine when each is tightened to 30 ft. lbs. torque. A thin but deep socket wrench may be used, provided the interior of the socket is not dirty, to prevent dirt from falling into the discharge fittings. A standard torque wrench can then be used on the socket.

The serrated style fittings may be tightened to 30 ft. lbs. torque using a special wrench as shown in Figure 62.

Always assemble the block unit to the pump before tightening these fittings. Never hold the block in a vise when performing this operation.

Assemble the high-pressure pipe with the two brass gaskets and the high-pressure screw at each end. Be sure the correct screw is used. If the parts call for one screw of each style, discard the flat-end screw and use two of the tapered-end type.

With the discharge fittings properly tightened, assemble the discharge fitting lock (2) and nut (3), Figure 57, using the screw (1) to secure them in position on the serrations of the discharge fittings. Be sure to use the correct lock for the correct fitting. Injection pumps with the $\frac{9}{141}$" hex on the discharge fittings have 36 serrations on a ½" diameter. Discharge fittings not having the hex have 36 serrations on a ⅝" diameter. The locks are not interchangeable, so they wil lhave to be used in sets of four.

A test run is recommended to see if any of the items reassembled may leak. This can be done by assembling items (1) to (7) inclusive, Figure 30. Dry off the exterior of pump with a quick evaporating fluid before operating on a test bench such as SE-1247. Valves may be tested as outlined at the end of this section.

With the test complete and fuel delivery satisfactory, the test items may be removed and all items in Figures 30 and 31 replaced as outlined for the "Plunger Unit." Wet the neoprene seals with lubricating oil before lowering the pump housing cover to prevent any damage to them.

TEST

If the quantity of fuel delivered indicates the control rack is in the correct position and the plunger unit is operating correctly, any uneveness in delivery between the various cylinders may be traced to faulty distributor action. Dirt on the valve seats will result in poor delivery. Thorough cleaning during repair and assembly are absolutely essential.

By using the same adapter, Figure 45, as used for determining leakage in the check and reverse-check valve unit, the leakage of the distributor valves and between the distributor blocks can easily be determined. The adapter should be assembled with the high-pressure screw gasket to the large tapped hole in the upper distributor block.

Before applying oil pressure to the complete assembled unit with an hydraulic test pump such as SE-905-A, place bolts through the four holes in the distributor blocks and tighten them securely. This is absolutely essential. Now exert 2500 lbs. oil pressure through the tapped hole in the upper block. Considerable time may be required for leakage to appear in the discharge fitting. If the block is stood on its narrow end, leaks can more quickly be noticed. Thoroughly dry the outside of the blocks to detect leakage between the lapped surfaces. No leakage here can be tolerated. After the first drop of leakage, a minute should expire before the next; ordinarily a valve leaks badly or not at all. Clean or retouch valves indicating leakage.

CAMSHAFT UNIT

INDEX

REMOVAL 108
DISASSEMBLY 111
REPAIR 111
REASSEMBLY AND REPLACEMENT 111

The camshaft in the single plunger injection pump serves a dual purpose. It acts as the drive for the entire pump and actuates the valves in the distributor unit through the valve tappets in the injection pump housing. The forward end of the camshaft protrudes from the pump to receive the injection pump gear hub. This hub attaches to the injection pump gear of the engine timing gear train to drive the camshaft at one-half engine speed. Just inside the pump flange, a large helical gear on the camshaft drives the governor shaft at twice engine speed. Two ball bearings in the injection pump housing support the entire camshaft unit.

REMOVAL

The camshaft need never be removed unless a thorough teardown is desired for inspection of parts and for a thorough cleaning of the pump housing. It is advisable to remove all parts, including the distributor plunger and primary pump units, before proceeding to the disassembly of the items directly connected to the camshaft.

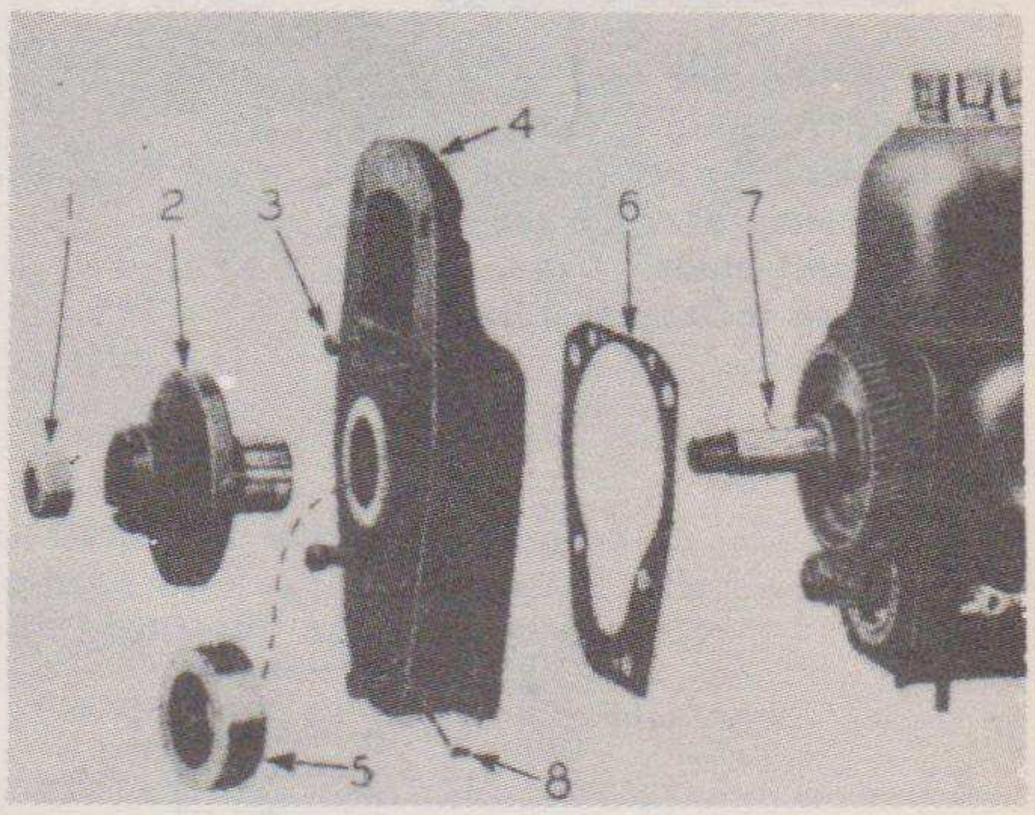

Fig. 63—Pump flange and gear hub removed. (1) Camshaft nut ($\frac{15}{16}$" hex). (2) Gear hub. (3) Socket head capscrews. (4) Pump flange. (5) Oil seal. (6) Pump flange gasket. (7) Gear hub key. (8) Soft copper capscrew lock for capscrews (3).

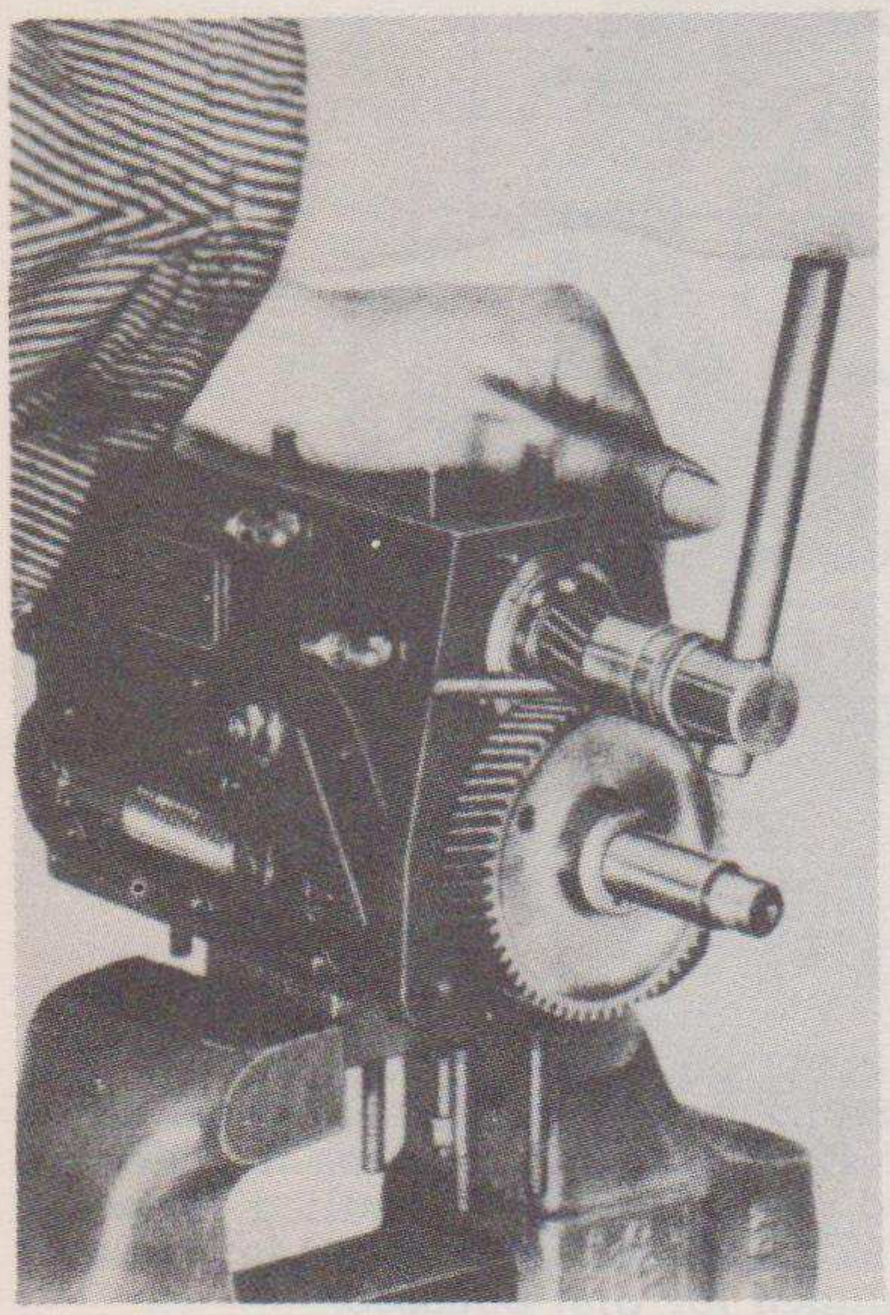

The first step in the systematic disassembly of the camshaft is the removal of the gear hub (2), Figure 63. This can be done by first placing a $\frac{5}{16}$" capscrew in one of the holes in the face of the gear hub, placing a bar under the capscrew and against the hub, and turning off the self-locking camshaft nut ($\frac{15}{16}$" hex.)

Fig. 64—Removing nut from end of governor shaft before removing camshaft gear.

A standard puller may be used to pull the gear hub from the shaft. The gear hub is a snug fit on the shaft and is not tapered. The three tapped holes in the gear hub (2) may be used to assemble a puller plate, if necessary, using three 3/8" capscrews.

With the gear hub removed, a 7/32" hex and a 3/16" hex Allen head screw wrench may be used to remove the five socket-head pump flange capscrews (3) from the pump flange (4). The pump flange with oil seal (5) can then be withdrawn. The pump flange gasket (6) may stick to the pump housing or it may come off with the pump flange (4).

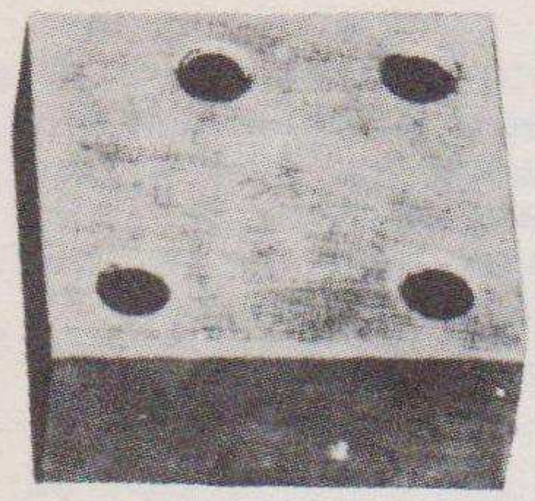

Fig. 65—Service tool for holding pump housing inverted on top of a vise. The two closely spaced holes slide over the rear distributor unit studs. Use a nut on one stud to keep tool from dropping off.

With the pump flange removed, the key for the gear hub (2) may be removed from the shaft. If the oil seal (5) is to be replaced, it may be driven from the pump flange (4).

With the plunger and distributor units removed as well as the bottom plate (1), Figure 27, the pump can be inverted and supported over a vise with the aid of a block as shown in Figure 64. The block is shown in Figure 65 and is dimensioned in Figure 66. It is not necessary to remove the side cover of the pump as shown in Figure 64 unless it is desirable to immediately remove all covers from the pump.

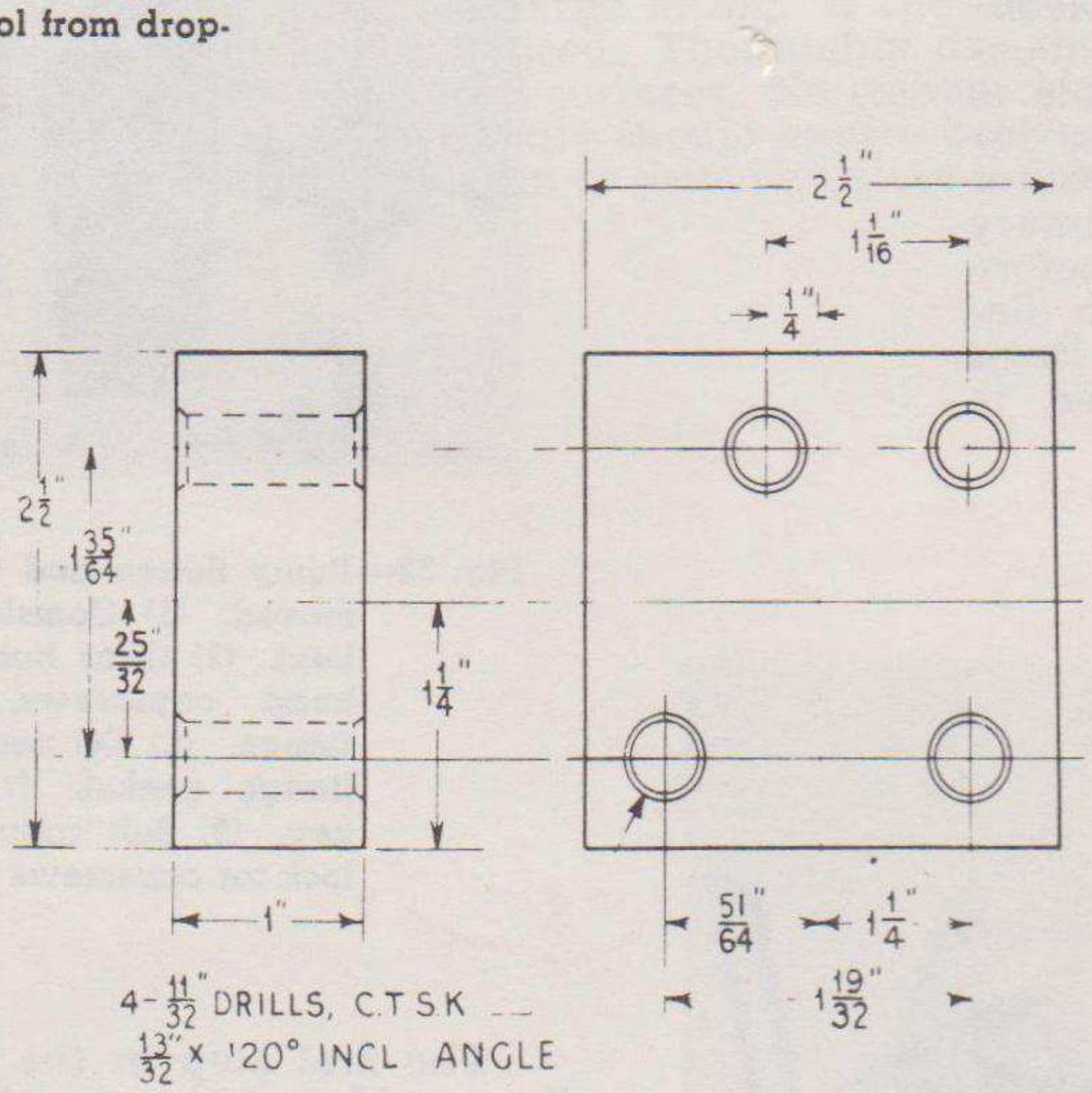

Fig. 66—Dimensions for making service tool to hold pump inverted on top of a vise.

By using a soft piece of copper between the teeth of the two gears, the 3/4" hex. governor shaft nut can easily be turned off the end of the governor shaft. This nut is removed to avoid the camshaft gear (8), Figure 63, from striking it as it slides off the camshaft. With the self-locking nut removed, the gear may be pulled from the shaft with the aid of a puller plate such as SE-662 and a standard three-jaw puller. The two 5/16" tapped holes in the gear web are included for that purpose.

With the gear (1), Figure 67, removed, the locking wire in the three capscrews (2) may be removed and then the capscrews removed. This frees the camshaft bearing retainer (3). The camshaft gear key (5) may also be removed. The remainder of the assembly, including the large bearing (6), camshaft (4) and the small bearing (7) may be withdrawn from the pump housing with only the hand pulling on the camshaft (4). If the small bearing (4) does not come out with the shaft, a puller will have to be used to remove it.

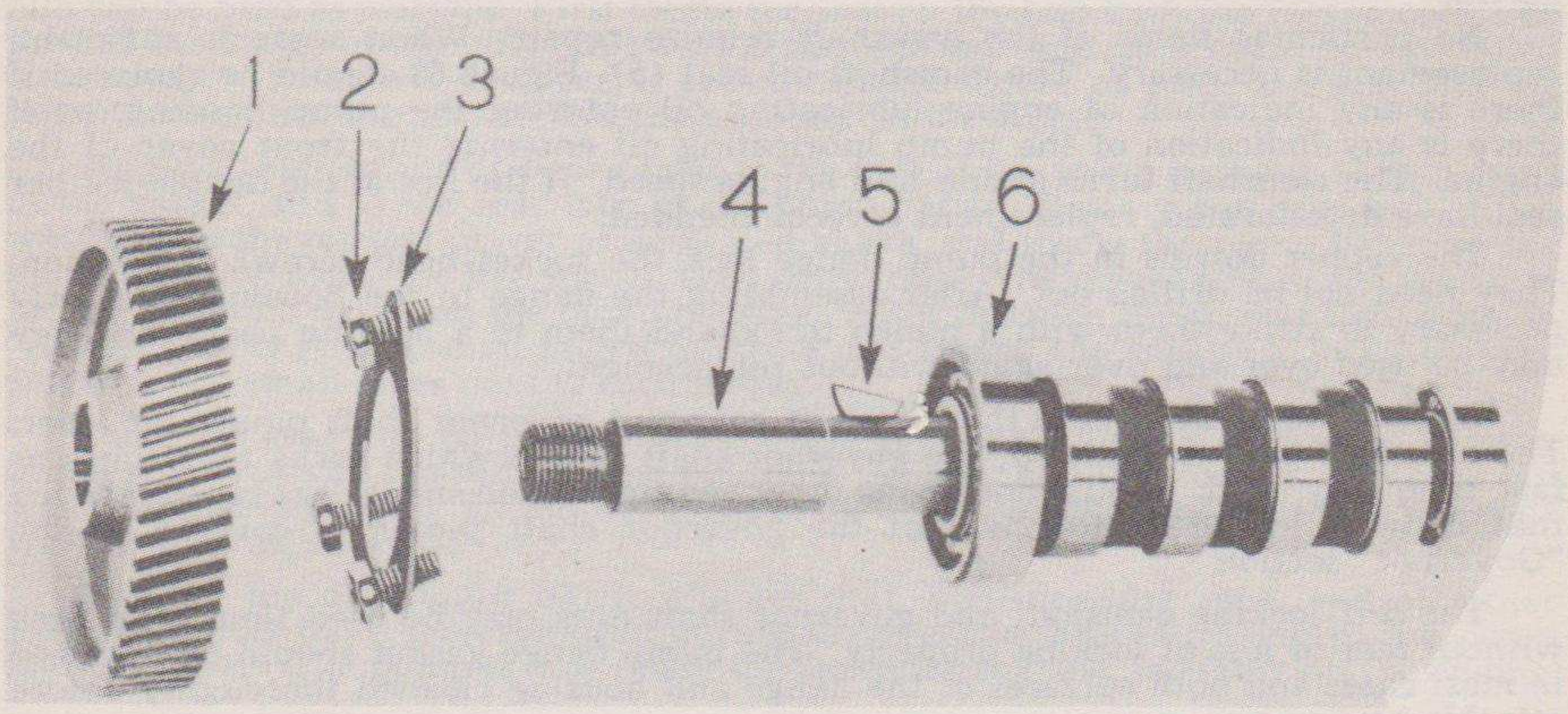

Fig. 67—Camshaft assembly. (1) Camshaft gear. (2) Bearing retainer capscrews. (3) Bearing retainer. (4) Camshaft. (5) Camshaft gear key. (6) Camshaft bearing, large. (7) Camshaft bearing, small.

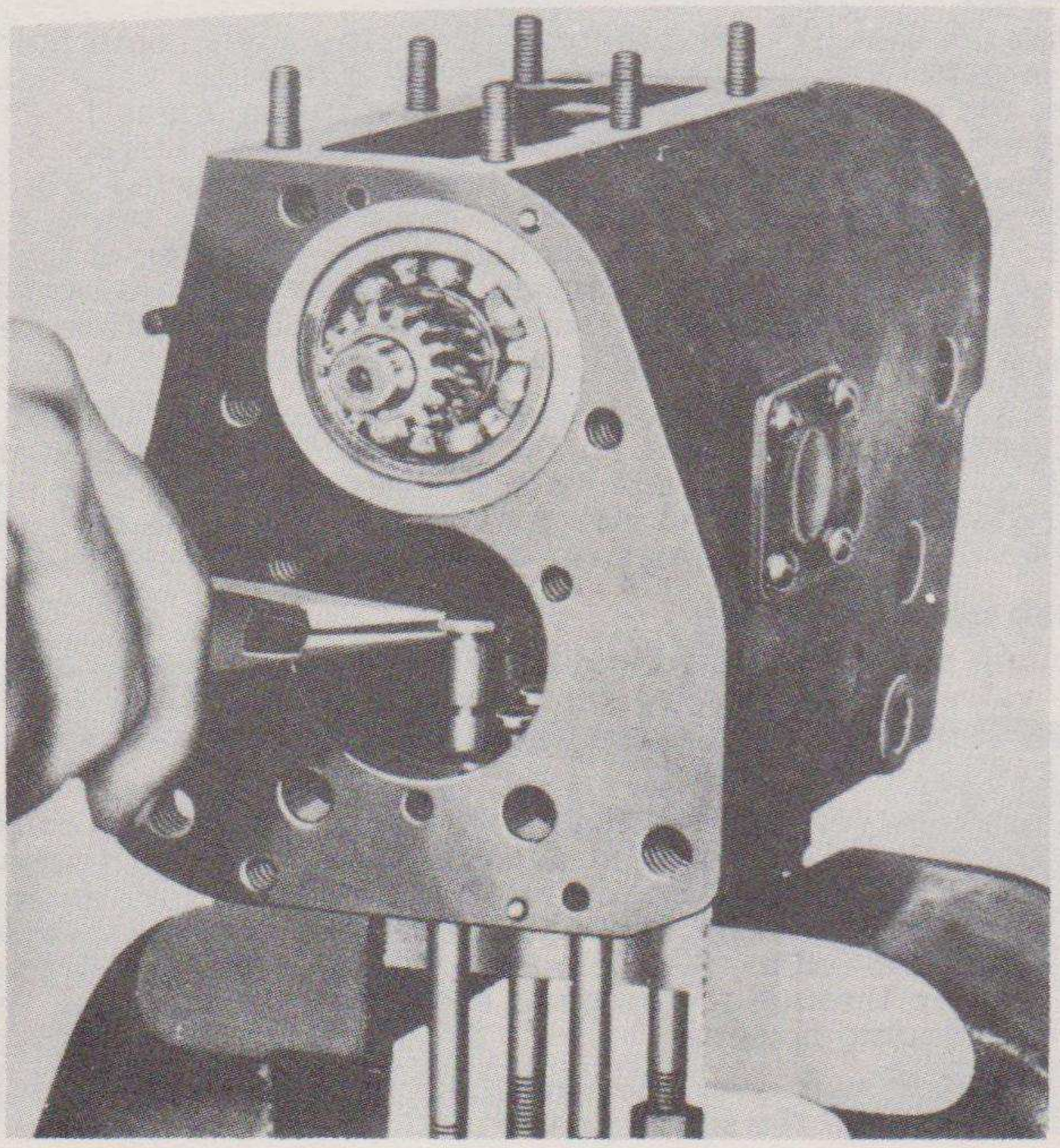

Fig. 68—Removing distributor valve tappets.

DISASSEMBLY

Ample room is provided to press or pull the two bearings (6) and (7) from the camshaft (4), Figure 67. If the oil seal (5), Figure 63 is to be replaced, it may easily be driven from the pump flange (4).

Figure 68 shows the removal of the last item making up the camshaft assembly. These distributor valve tappets should be removed one by one as shown. This permits their being kept in order for replacement in the holes from which they were removed.

REPAIR

No particular items of the camshaft require repair. When wear is sufficient, replacement is necessary. The camshaft oil seal (5), Figure 63 should be replaced if there is any indication of engine lubricating oil entering the pump housing, or if there is any indication of the pump lubricating oil entering the front cover of the engine. The camshaft turns at one-half engine speed. If the lips of the double leather seal have deteriorated, replacement is recommended.

The copper dowels in the pump flange lock the socket-head screws in position. They need not be drilled out. After assembling the flange to the housing, it is only necessary to strike them with a punch to expand them to a holding position. They may be used over and over again without replacement.

Inspect the teeth of both the camshaft gear and governor shaft pinion for wear. The camshaft gear is file hard; the governor shaft pinion which turns four times as fast, is equally hard. Should one or the other require replacement, it is recommended that both be installed. Removal of the governor shaft pinion is covered in the "Governor" section.

The self-locking camshaft and governor shaft nuts may be used time after time without fear of loss of locking property. The pump flange gasket should be renewed in most cases and both surfaces of the flange and housing cleaned thoroughly before attaching a new one.

Keys for the camshaft gear and the gear hub should fit snug in both the keyways of the shaft as well as the keyways in the parts they hold from turning.

Inspection of the ball bearings can be made, without their removal from the camshaft, after they have been thoroughly cleaned. Ordinarily these bearings should never require replacement.

The lobes on the camshaft are ground to an extremely smooth finish. The total lift of the cam is .021". Raising and lowering of the distributor valve tappet requires a 40° rotation of the camshaft. Some rough spots on the cam may be smoothed with emery cloth if the unit is completely washed after so doing. Inspection of the camshaft at the same time the distributor valve tappets are inspected will give a better indication of its past operation. The standard diameter of the round portion of the cam is 1.3748" to 1.3738". The radius to the high point of the lobe of the cam is .7080" to .7084". In view of the small lift of the cam, there should be no wear on the valve tappets except where they contact the camshaft. Wear of .0025" from the lobe of the cam is considered too much for perfect operation.

The distributor valve tappets are file hard and lapped to a brilliant finish. Wear on them can be recognized like that on the plunger. The normal diameter of the tappets is .2492" to .2493", giving a sliding fit of .0004" to .0008". The holes in which they operate are finely burnished to give maximum life and no perceptible play, to prevent fuel from entering the lubricating oil sump.

REASSEMBLY AND REPLACEMENT

With the pump housing inverted and held in a vise by using a block as sketched, the distributor valve tappets may be replaced in the holes from which they were removed, or new ones installed. Lubricate them and be sure they slide freely in the pump housing.

Press both bearings (6) and (7), Figure 67, on their respective ends of the camshaft. Be sure the inner races are tight against the shoulder on the shaft. Put the camshaft gear key in the shaft and push the entire assembly into the pump housing. Be sure the key fits snug in shaft. Assemble the three capscrews (2) to the bearing retainer (3) and bolt the retainer to the pump housing. Lock the screws by running an 8" piece of $\frac{1}{16}$" wire through the heads of each screw. Flatten the twisted end of the wire against the pump housing.

Push the camshaft gear over the camshaft; the shallow hub faces the pump housing. Be sure to engage the single punch-marked tooth of the camshaft gear be-

tween the two single punch-marked teeth of the governor shaft pinion. This determines the timing of the pump with respect to the gear hub. Replace the key for the gear hub in the keyway in the camshaft; it should be snug in the shaft.

Next assemble the self-locking nut on the governor shaft and draw up the nut to 40 to 45 ft.-lbs., using a torque wrench similar to the SE-1137 shown in Figure 69. A small piece of soft copper may be used between the teeth of the gears to keep the governor shaft from turning while tightening the governor shaft nut.

Assemble the double-lip camshaft leather oil seal to the pump flange. The gear hub can be used as a driver. First locate the seal on the hub with the real smooth side toward the flange of the hub. This seal is the opposed type, so it could be assembled either way. The above, however, is recommended. Drive or press the seal into the pump flange until the seal strikes the shoulder in the flange.

Apply a thin coating of clear sealer to the face of the pump housing, to both faces of the gasket, and to the rear face of the pump flange. Remove the gear hub which was used as the oil seal driver as described above, and screw the pump flange to the pump housing, using the five socket-head capscrews. The dowel pins in the rear face locate the pump flange on the pump housing. After drawing the screws tight with an "Allen" wrench, use a small punch to strike and spread the capscrew locks (copper slugs) in the small holes next to each screw.

Push the gear hub on the camshaft, being sure that the key enters the keyway in the hub. Turn on the self-locking nut, hold the gear hub the same as when the nut was removed, and draw up the nut to 70 to 85 ft.-lbs. torque tension, using a torque wrench such as SE-1137.

Replace the distributor block, plunger unit, high-pressure pipe, and all other items that may have been removed during the overhaul procedure except the pump housing cover. The pump is now ready for bench testing and assembly on the engine.

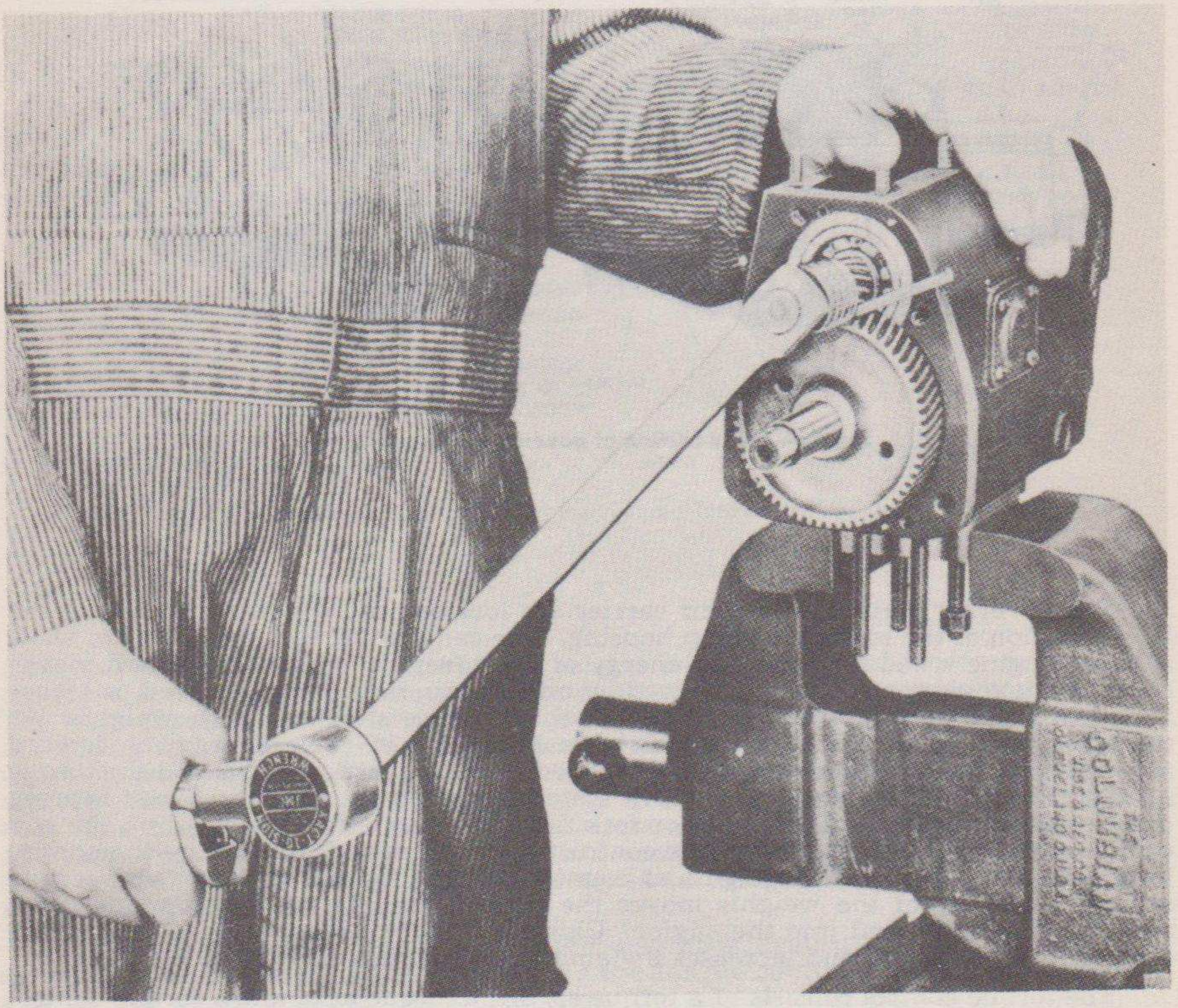

Fig. 69—Tightening governor shaft self locking nut to 45 ft.-lbs. torque.

GOVERNOR

INDEX

DESCRIPTION AND OPERATION 113
REMOVAL 115
DISASSEMBLY 123
REPAIR 125
REASSEMBLY 127
REPLACEMENT 128
ADJUSTMENT 131

DESCRIPTION AND OPERATION

The speed of and load on a Diesel engine are controlled by the amount of fuel injected into the cylinders. In the case of the single-plunger fuel injection pump, the amount of fuel injected is determined by the position of the helix on the plunger in relation to the ports in the plunger bushing. By means of a governor, the position of the plunger in the bushing is automatically controlled. The governor consists of two fly-ball-type weights rotating with a shaft and the necessary linkage to connect them to the plunger. The centrifugal action of the governor weights is balanced through the use of governor and torque springs to give the desired engine performance.

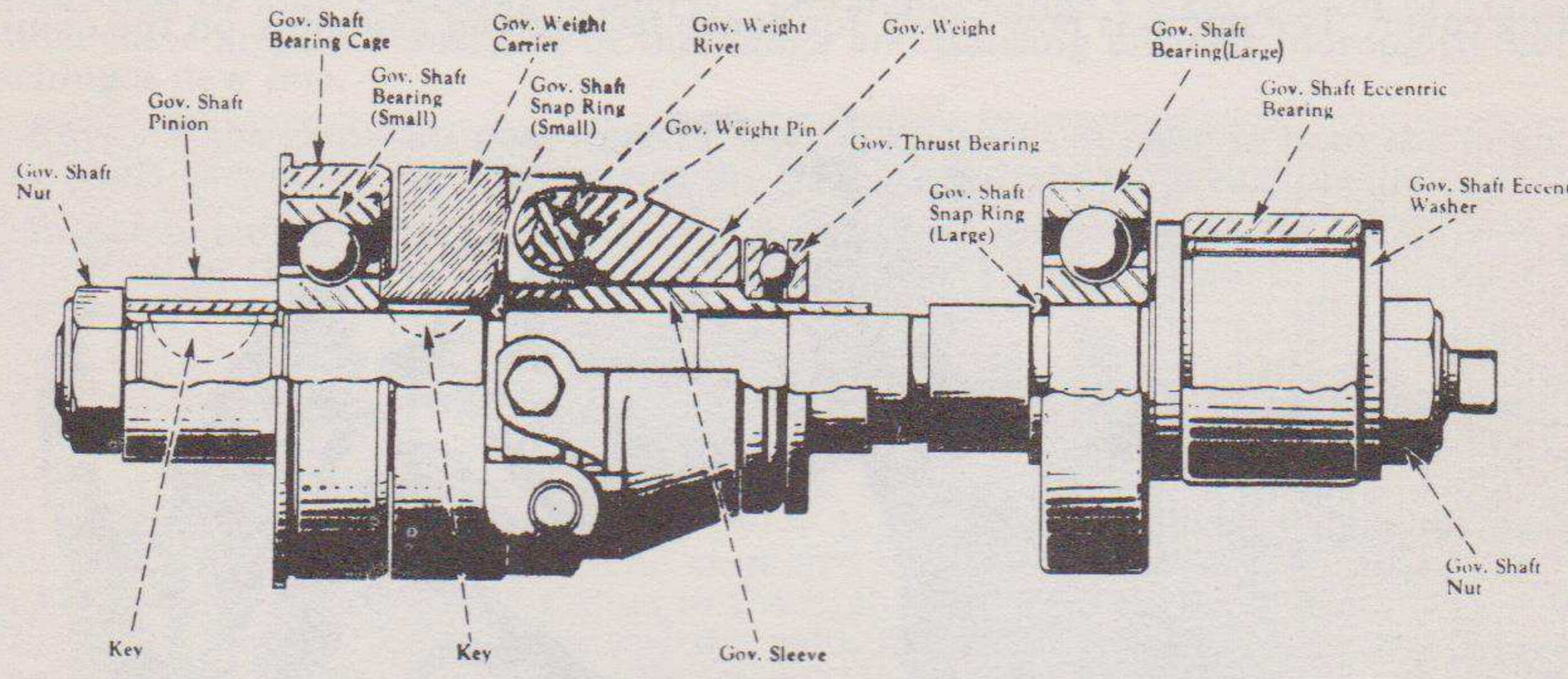

Fig. 70—Cross-section of governor shaft assembly.

The governor weights and their carrier are located on the governor shaft in the lower portion of the injection-pump housing. The camshaft drives the governor shaft at twice engine speed for increased energy of the governor weights. Outward movement of the governor weights, produced by an increase in the engine speed, is transferred to a sleeve on the shaft by means of thrust shoes attached to the weights. As the speed is reduced and governor weights lose some of their energy, an inward movement of the governor weights is produced by the governor spring and the torque springs through a pivoted governor fork maintaining contact with the thrust bearing on the governor sleeve. The governor fork is also connected to the spool on the end of the control rack. Movement of the control rack is always controlled by the energy in the centrifugal governor weights as counterbalanced by the governor and torque springs. Opening of the weights moves the control rack forward and reduces the amount of fuel injected into the engine. Closing of the governor weights moves the control rack backward and increases the amount of fuel injected into the engine.

The torque control consists of a torque spring, a torque arm, and a torque control lever. The torque control lever is keyed to the pivoting governor fork shaft, while the torque spring arm rotates freely within limits on the shaft. When governor weights

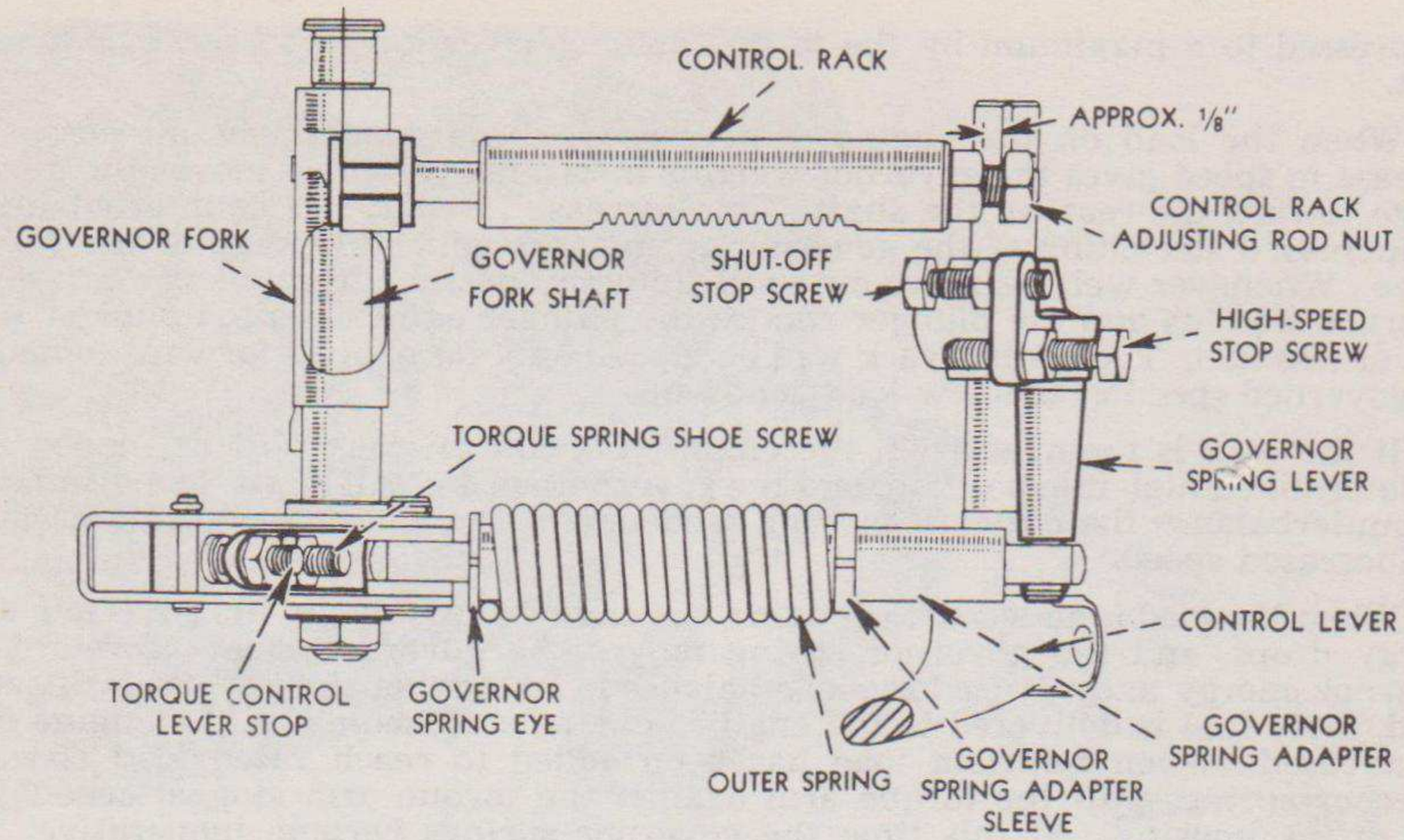

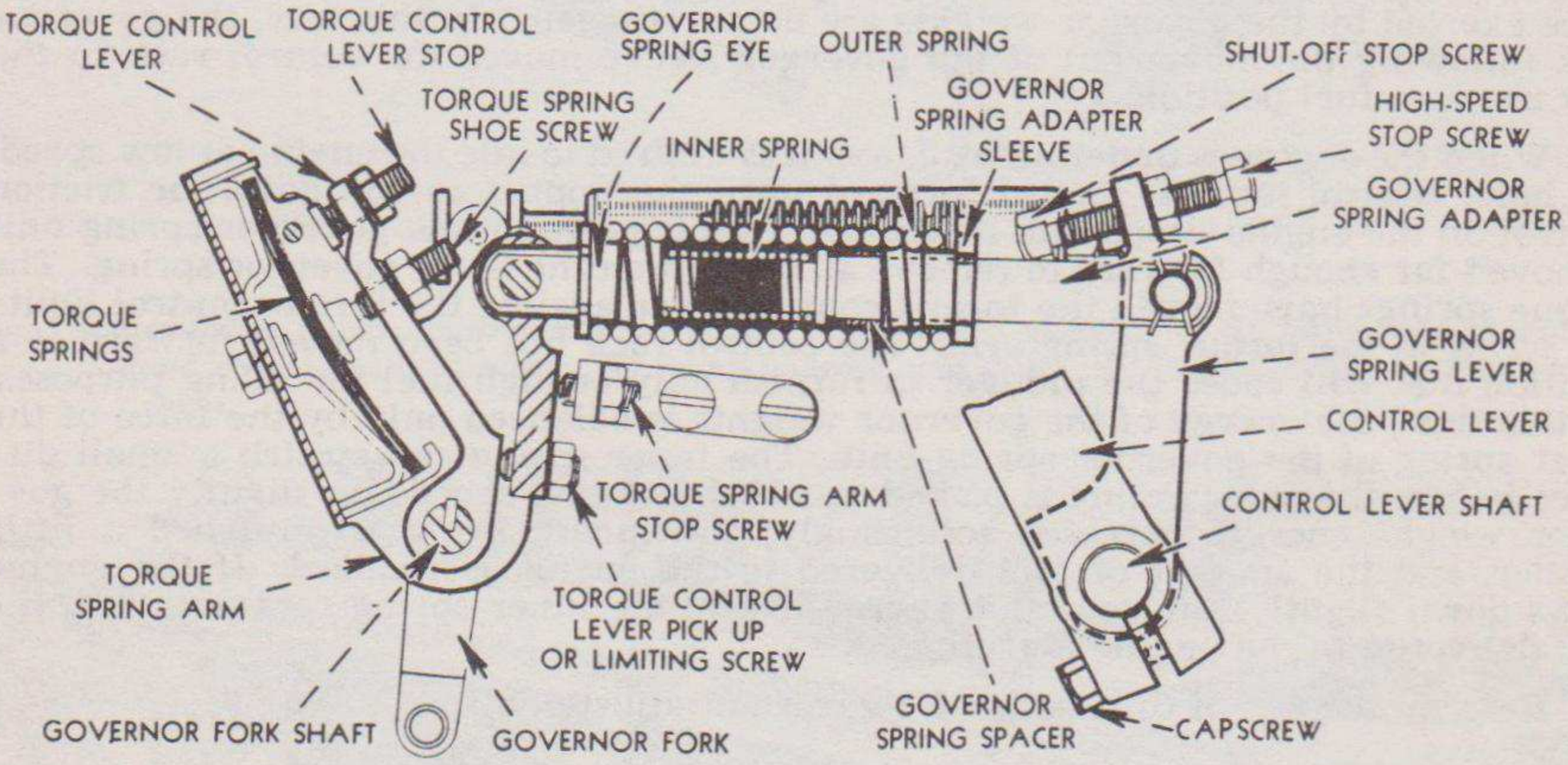

Fig. 71—Cross-section of governor spring and torque control assemblies.

move outward, the torque control lever rotates with the governor fork shaft toward the front, compressing the torque springs and rotating the torque spring arm with it. The torque spring arm is pinned to the governor spring unit and stretches the governor spring when the weights move outward. The control lever on the outside of the injection-pump housing attaches to a governor spring lever inside the housing through a shaft. The governor spring lever attaches to the rear end of the governor spring unit. The position of the control lever determines the position of the governor spring and torque control which in turn controls the engine performance. Movement of the hand control lever is limited by stops attached to the governor spring lever within the injection-pump housing.

If the hand control lever is set all the way back against its stop, the governor spring will be stretched slightly in holding the torque control against its stop on the side of the pump housing. At this setting, the engine will deliver its maximum output. At maximum governed speed, the governor spring tension will hold the torque control against the stop while the torque springs in the torque control will be

compressed to a maximum by the torque control lever keyed to the governor fork shaft.

When the load on the engine is decreased, the engine speed increases. This increase in speed gives the governor weights more energy, which moves the governor sleeve toward the rear on the shaft. This increase in energy is counterbalanced by the increased stretching of the governor spring through the linkage to the governor sleeve. Whenever weights move outward from any position, the linkage between the governor weights and the plunger rotates the plunger and causes the plunger unit to deliver less fuel. The control rack will be moved only far enough forward to maintain the governed speed at the new load condition.

If the load is removed from the engine, the control rack will be moved to the predetermined high idle position, and the governor spring will be stretched sufficiently to counterbalance the outward moving tendency of the governor weights because of the increased speed.

When the load is added to the engine, the engine slows down, the governor weight energy drops, and the governor spring moves the governor sleeve forward until governor energy and spring force are balanced. In moving the governor sleeve forward, more fuel is delivered to the engine, and, as a consequence, the engine output is increased. When sufficient load has been added to reach rated load speed, the governor springs pull the torque arm against the torque arm stop attached to the side of the housing. At this time the governor springs become inoperative. From rated load speed down, torque springs only balance the governor energy. If more load is added to the engine, its speed will drop lower, governor weight energy will drop accordingly, and the compressed torque control springs will rotate the torque control lever towards the rear of the pump until the spring force and the centrifugal force exerted by the governor weights are balanced again. In this way, the governor fork following the movement of the governor sleeve moves the control rack to the rear or more fuel position.

When the engine is under no load, and it is desired to idle the engine at low speed, the hand control lever is moved forward until the poppet in the governor friction control on the engine drops into its socket. In this position, the governor spring unit is moved far enough forward to remove all tension on the outer governor spring. The torque springs have moved the torque control lever against the torque control limiting screw in the torque spring arm. The control rack has been moved forward to a position that will cause the plunger to furnish only enough fuel for idling purposes. At this time, the energy of the governor weights is balanced only by the force of the inner spring of the governor spring unit. The inner spring can stretch a small distance before the outer spring is picked up. If the engine speeds up slightly the governor weight energy increases accordingly, the inner spring is stretched a little further, and the amount of fuel delivered to the engine is reduced. If the engine slows down slightly, the governor energy drops, the inner spring contracts, and the fuel delivered to the engine is increased.

Refer to the end of this section for governor adjustments.

REMOVAL

The first step in the disassembly and complete servicing of the governor is the removal of the pump-housing side cover (3), Figure 72. This is accomplished by loosening the cap screw on the lower end of the control lever (4) and pulling it from the serrated end of the control lever shaft. Break the wire seal (2) on the side cover screw, and remove all six of the ¼" socket-head screws with a $\frac{3}{16}$" hex Allen wrench. Be sure to remove all shakeproof lockwashers. The pump-housing side cover (3) and gasket (5) can then be lifted from the pump housing, exposing the torque control and governor spring assemblies.

While it is not absolutely necessary, the recommended procedure includes the removal of the primary pump, the scavenging valve, the plunger unit, the distributor unit, and the camshaft. The absolute minimum includes removal of the primary pump, the plunger unit, and camshaft bearing retainer.

After these preliminary steps have been completed, the governor spring and the torque control units may be removed. With the removal of the snap ring (1), Figure 73, and the self-locking, governor-fork shaft nut (2), the torque control unit (4), Figure 74, and the governor spring unit (9) can be slid from both the governor fork shaft (1) and the governor spring lever (11).

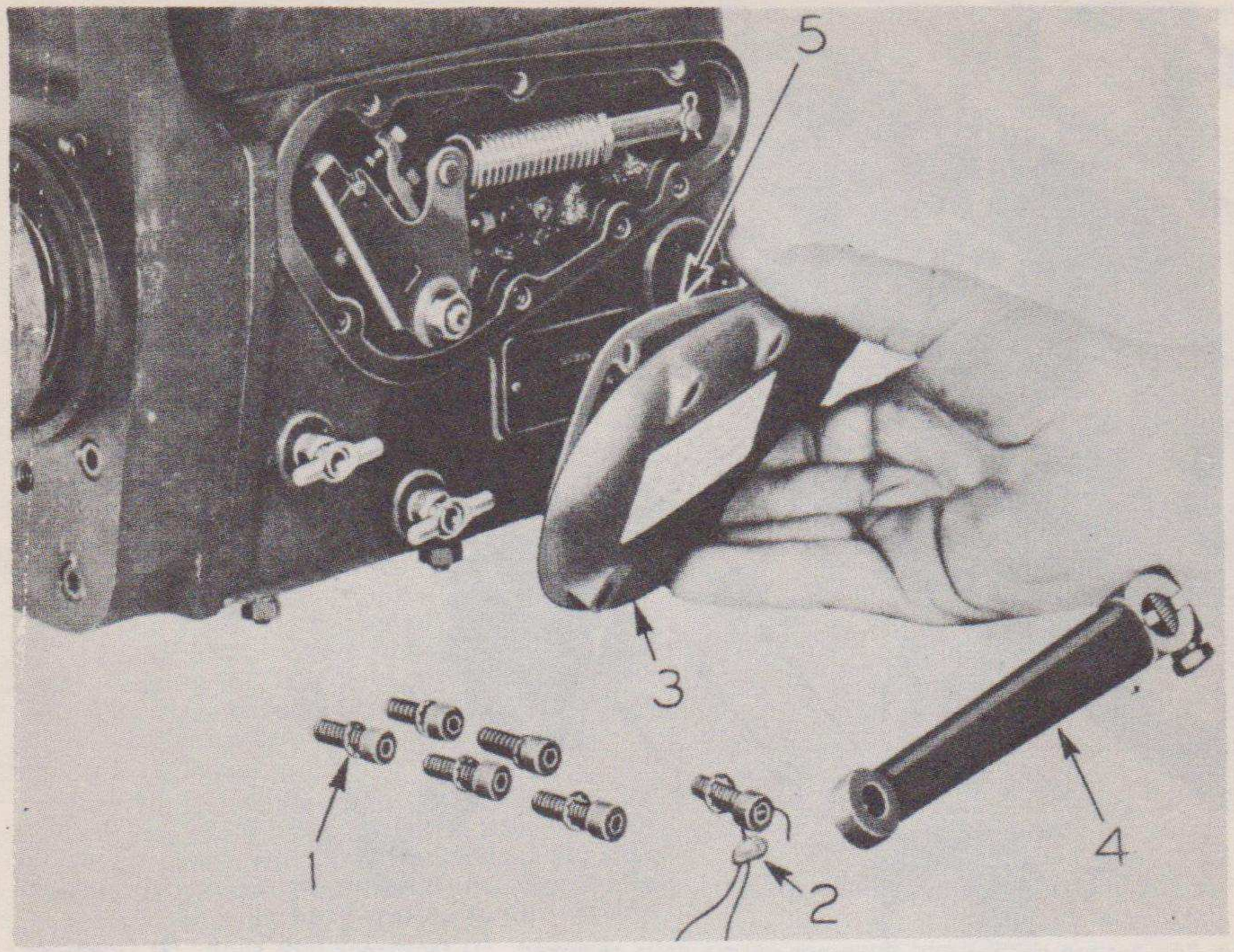

Fig. 72—Removing pump housing side cover. (1) Socket-head capscrews. (2) Pump seal in drilled head socket-head capscrew. (3) Pump housing side cover. (4) Control lever. (5) Side cover gasket.

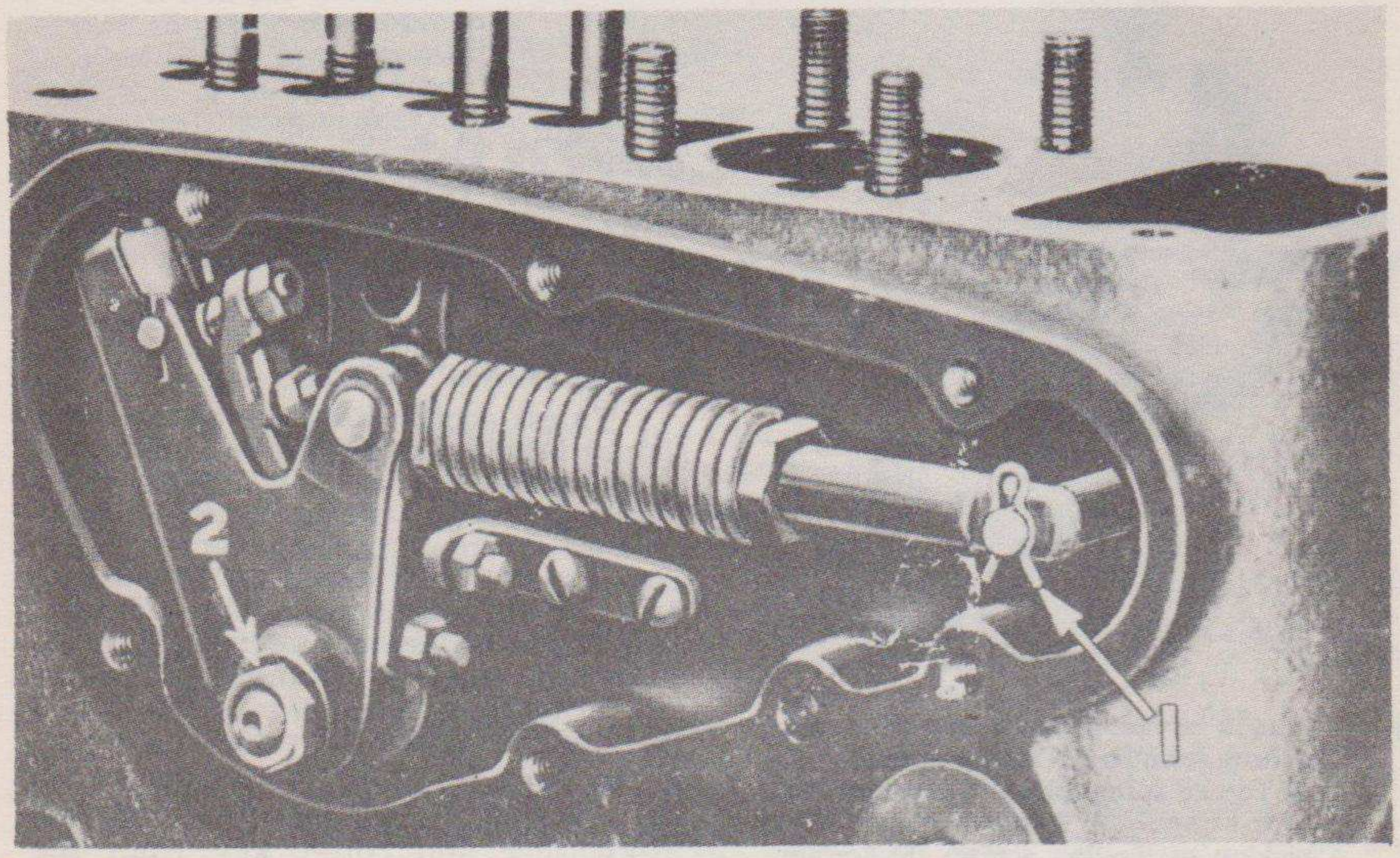

Fig. 73—Torque control and governor spring assemblies. (1) Governor spring lever snap ring. (2) Governor fork shaft nut.

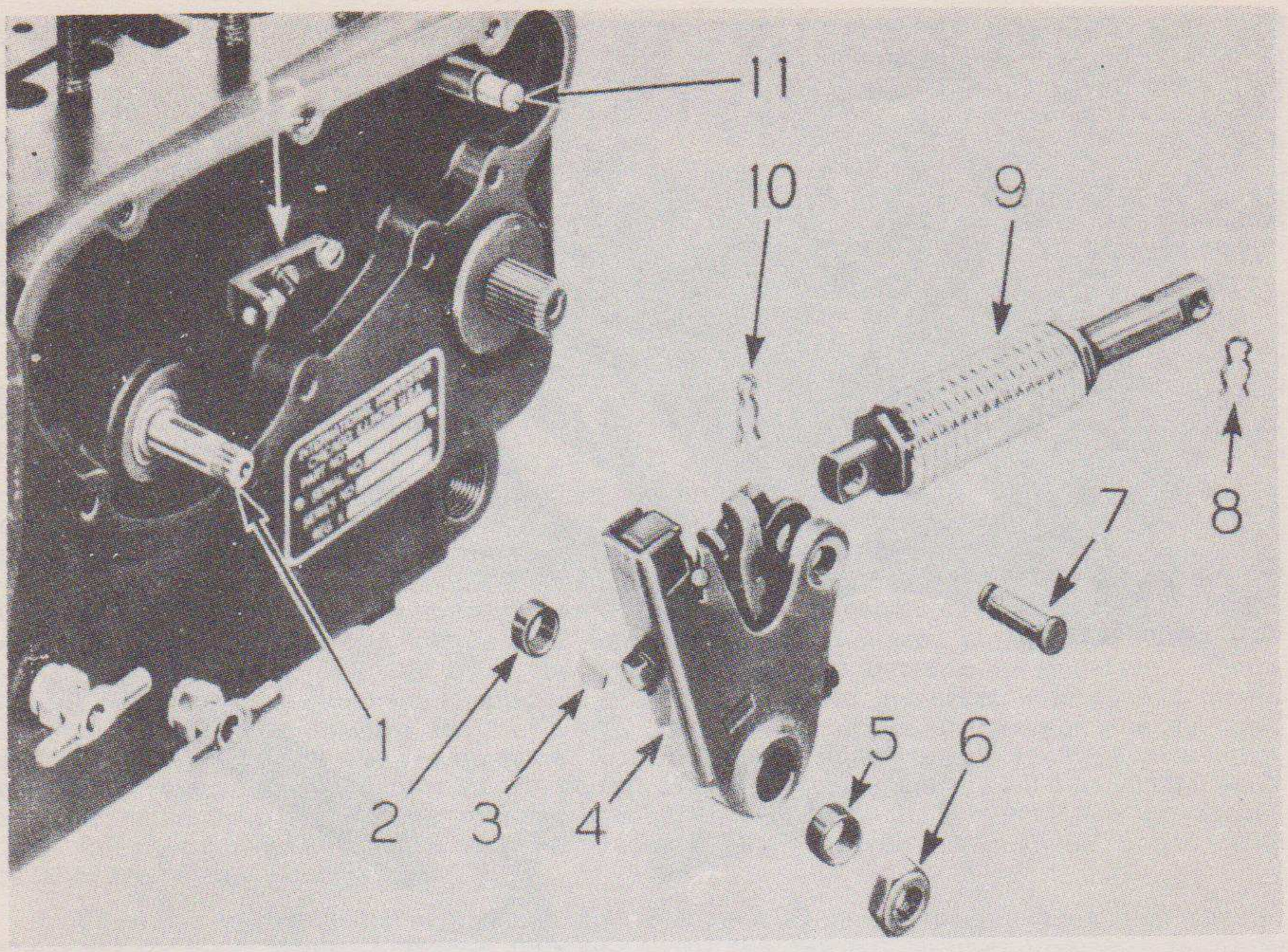

Fig. 74—Torque control and governor spring units removed. (1) Governor fork shaft. (2) Governor control lever spacer. (3) Torque control lever key. (4) Torque control unit. (5) Governor control lever spacer. (6) Governor fork shaft. (7) Governor spring pin. (8) Snap ring. (9) Governor spring unit. (10) Snap ring. (11) Governor spring lever. (12) Torque spring arm stop holder.

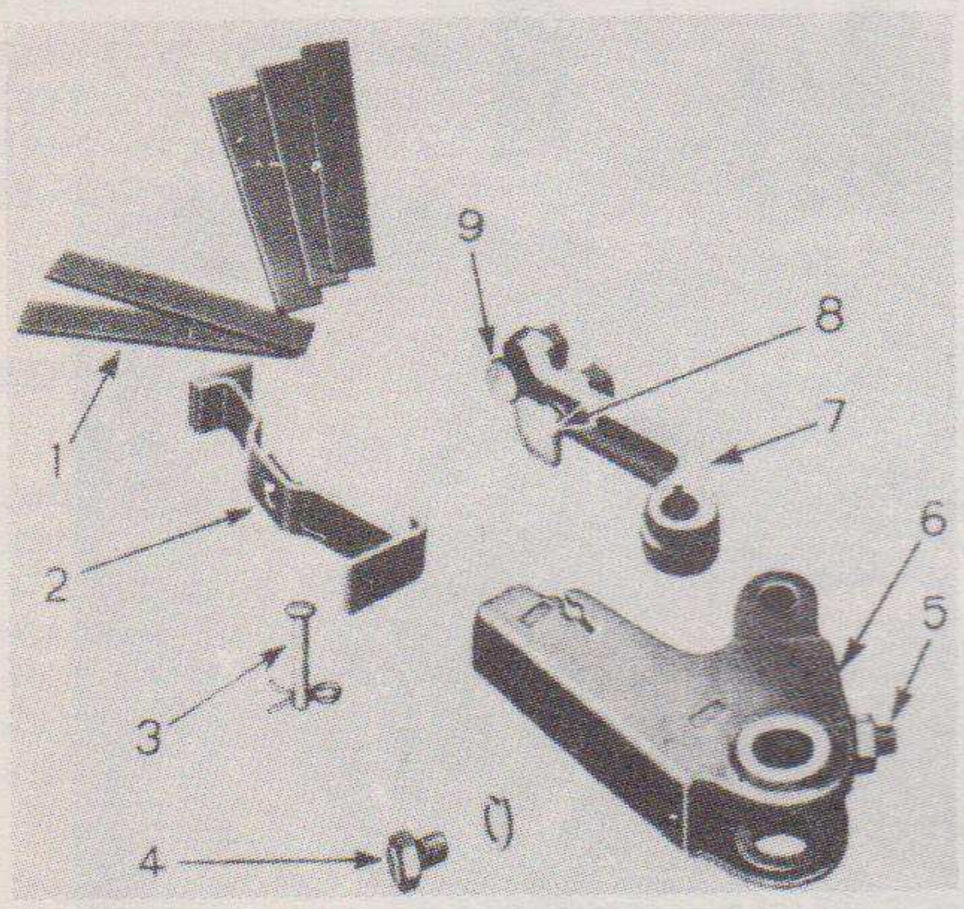

Fig. 75—Torque control unit disassembled. (1) Torque springs. (2) Torque spring seat. (3) Torque spring pin. (4) Torque spring seat screw. (5) Torque control lever pick-up or limiting screw. (6) Torque spring arm. (7) Torque control lever. (8) Torque spring shoe screw. (9) Torque control lever stop screw.

Figure 74 shows the result of removing the key (3) from the governor fork shaft (1), sliding the torque-control lever spacer (2) from the governor fork shaft (1) and removing the snap ring (10) from the governor spring pin (7).

Torque Control Unit

Unless accidentally damaged, there should be no reason to disassemble the torque control. It is shown exploded in Figure 75 so that all parts can be seen. Whenever removing the governor, allow the torque control to remain assembled. Altering of the settings of the adjusting screws will necessitate a complete dynamometer test of the pump while on an engine to return all the adjustments to their proper position.

If disassembly is warranted, take out the spring seat screw (4) and the lockwasher and cotter key from the torque spring pin (3) on the back side of the torque spring arm (6). Push pin (3) from the torque spring arm (5).

Using a screw driver in the slot adjacent to the hole shown will make removal easier. The torque control lever (7), torque springs (1), and the torque spring seat (2), can all be slid from the torque spring arm (6). The torque control lever stop (9), torque spring shoe (8), and torque control lever pickup (5) can be quickly removed if desired. The lock nut retains the torque spring arm stop in the torque spring arm holder (12), Figure 74, which is held to the pump housing with two screws.

Reassembly of the torque unit is the reverse of disassembly. Be sure the cotter key is on the back side of the torque spring arm.

The hole in the torque control lever spacers (2) and (5), Figure 74, are ground to .3135" to .3140", giving a .0005" to .0015" clearance with the .3125" to .3130" diameter portion of the governor fork shaft (1). The outside of the spacers are ground to .4215" to .4220" diameter, giving a .001" to .002" loose fit with the bore in the torque spring arm (4). The rotation of these parts is very limited; therefore, no appreciable wear should be present.

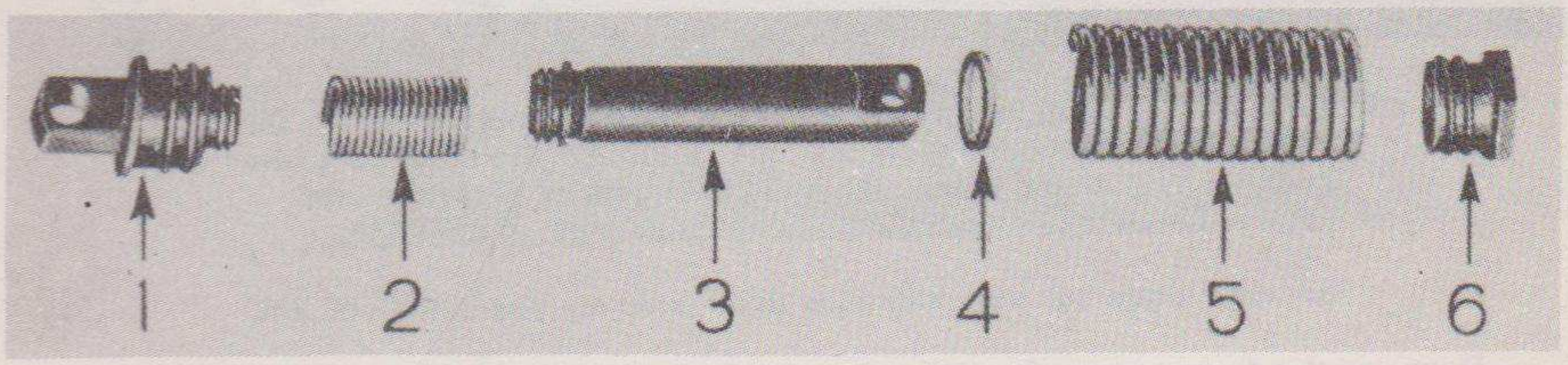

Fig. 76—Governor spring unit disassembled. (1) Governor spring eye. (2) Inner (idling) governor spring. (3) Governor spring adapter. (4) Governor spring spacer. (5) Outer governor spring. (6) Governor spring adapter sleeve.

Governor Spring Unit

With the torque control separated from the governor spring assembly, the governor spring adapter sleeve (6), Figure 76, can be held in a vise and the end of the large spring (5) tapped with a small punch to unscrew it from the adapter sleeve. The governor spring spacer (4) will rest on top of the governor spring adapter (4).

The governor sring eye (1) can likewise be held in a vise and the end of the large spring (5) tapped to unscrew it from the spring eye. The same technique can be used for removal of the inner spring (2) from both the spring eye (1) and the spring adapter (3). Some special applications do not use any inner spring.

The governor springs used depend on the speed regulation desired for the particular installation. The parts list specified the springs, spacers, and torque springs to be used.

When reassembling the governor spring unit, be sure the end of the inner spring (2) just touches the shoulder on the governor spring eye (1) before turning the governor spring adapter (3) into the spring. If the spring is turned too tight against the shoulder, it will arch and thus contribute to a surge at low speeds. Before the spring strikes the shoulder of the adapter, observe the alignment of the hole in the governor spring eye (1) and the hole in the end of the spring adapter (3). Turn the shoulder of the adapter (3) as close to the spring as possible but only close enough for both holes to be parallel. This condition is absolutely necessary if the assembly is not to bind on either the pin (7), Figure 74, (which joins the governor spring unit (9) to the torque assembly (4), or on the governor spring lever (11).

Maintaining this alignment, the large governor spring (5) may be turned on the spring eye (1) and the governor spring spacer (4), Figure 76, may be slid over the spring adapter (7). The last item attached is the adapter sleeve (6); the spring should touch both the shoulder of the eye (1) and of the sleeve (6). Again inspect the holes in the eye (1) and the adapter (3) for alignment.

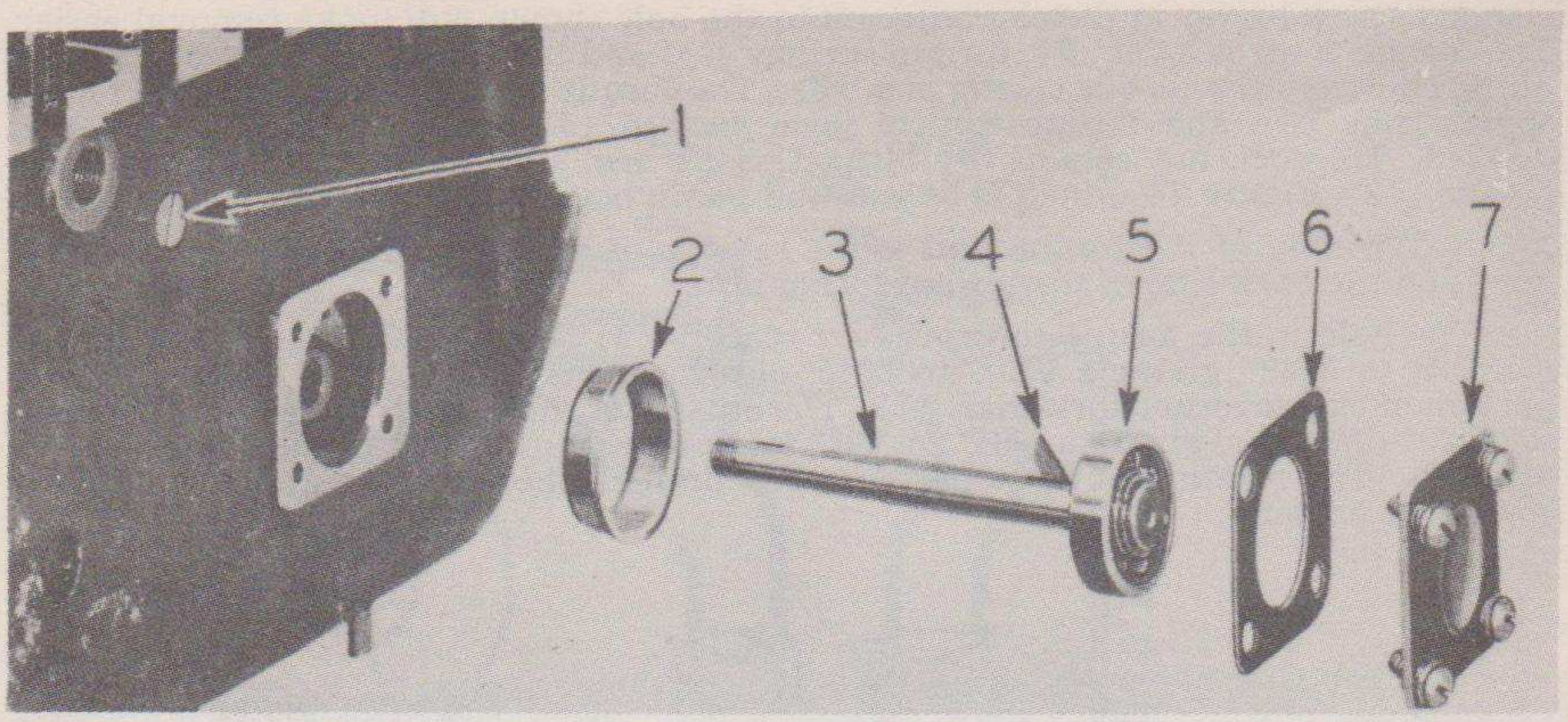

Fig. 77—Governor fork shaft removed. (1) Control rack locating screw. (2) Governor fork shaft bearing cage. (3) Governor fork shaft. (4) Governor fork shaft key. (5) Governor fork shaft bearing. (6) Back cover gasket. (7) Back cover.

Remove the four screws from the back side of the pump to free the pump-housing back cover (7), Figure 77, and the gasket (6). The governor fork shaft (3) can now be pushed out of the pump housing. The bearing (5), and possibly the retainer (2), will come out with the shaft. Removal of the key (4) allows the bearing to be removed from the shaft. The bearing retainer (2) may be removed from the bearing (5) if it adheres to the bearing.

Remove the control rack locating screw (1) from the back side of the pump, reach in the rear hole in top of the pump housing, push the control rack all the way forward to free the spool end from the governor fork, and then pull the control rack to the rear of the pump housing.

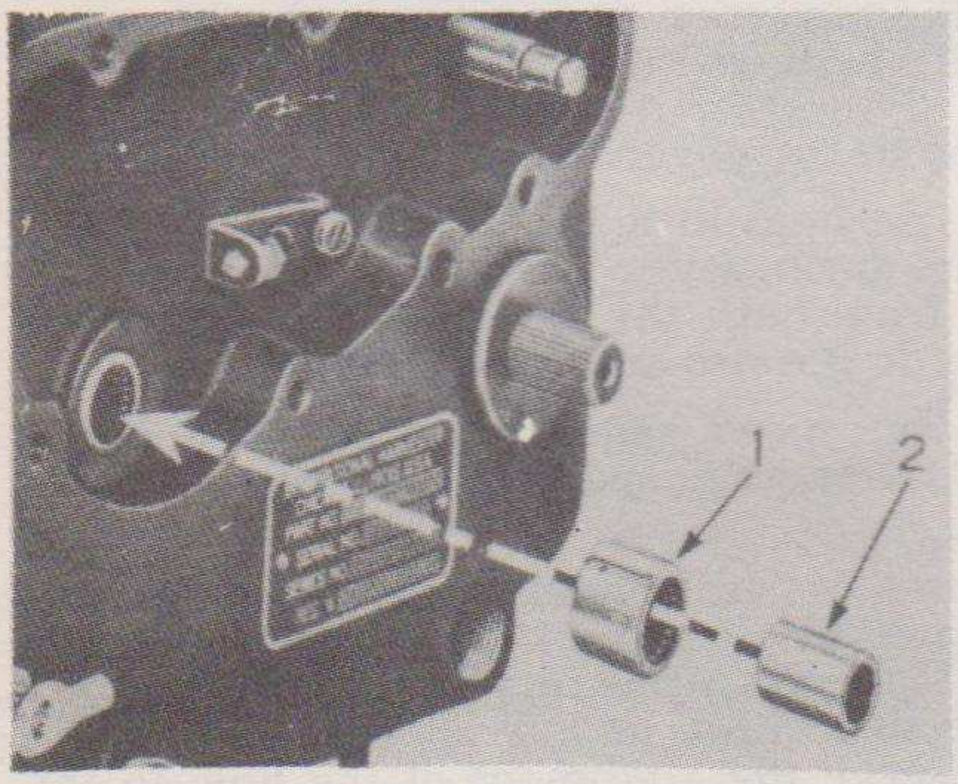

Fig. 78—Governor fork shaft needle bearing (1) and its spacer (2).

The governor fork shaft spacer (2), Figure 78, can be slid from the needle bearing (1) in the pump housing. The needle bearing may be removed if replacement is necessary. Ordinarily this is accomplished after removing all governor parts.

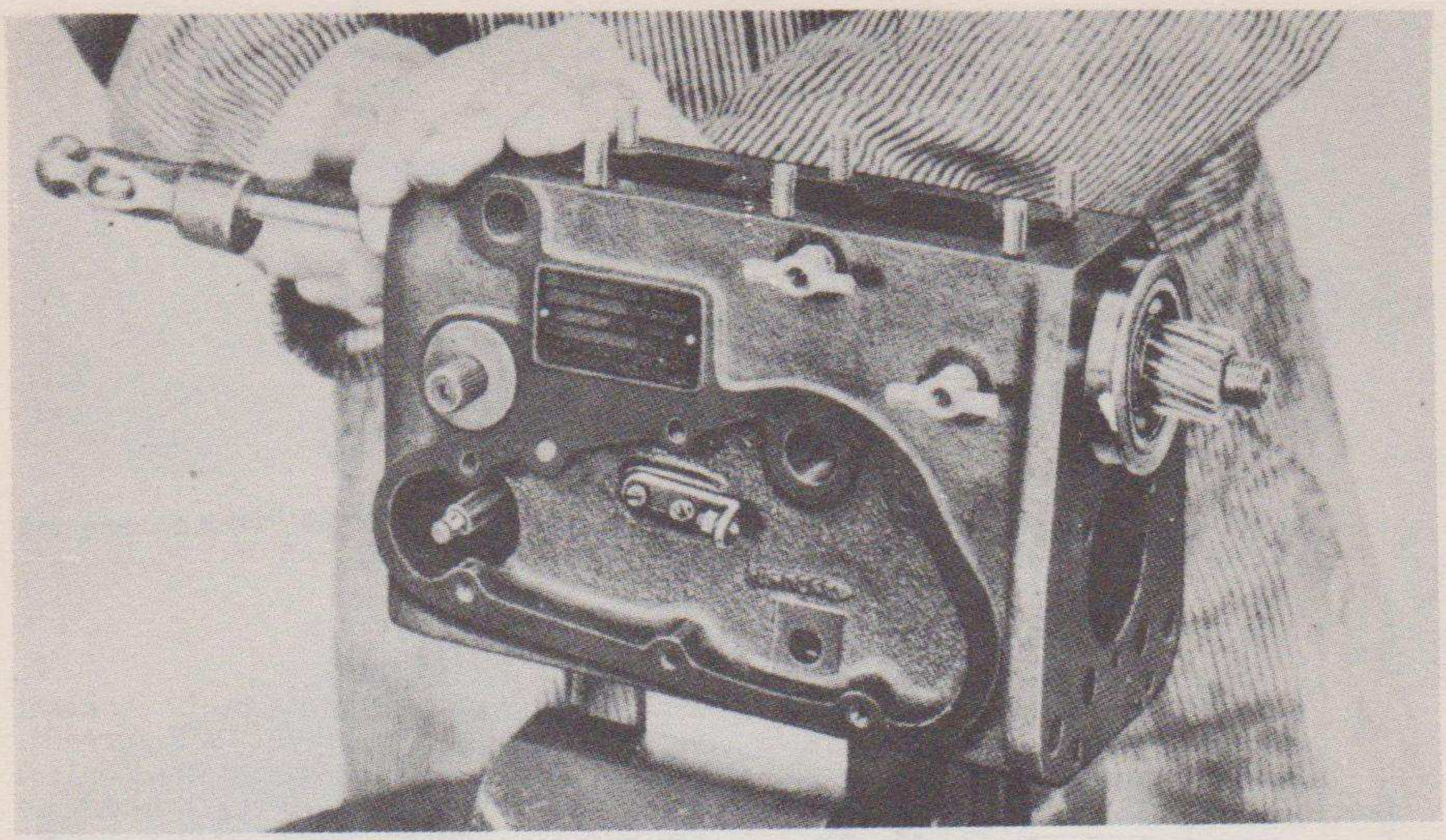

Fig. 79—Removing governor shaft assembly from the pump housing.

With the pump held bottom side up as shown in Figure 79, a small brass rod can be inserted through the primary pump hole in the pump housing, and the entire governor shaft assembly can be driven from the pump housing. Be sure to drive on the square end of the shaft and not on the eccentric washer. The governor fork (1), Figure 80, can now be worked around and removed through either the hole in the front or the bottom of the pump housing (2).

Control Rack

With the removal of expansion plug (4) in the rear of the pump housing (2), the control rack (3) can be taken from the pump housing.

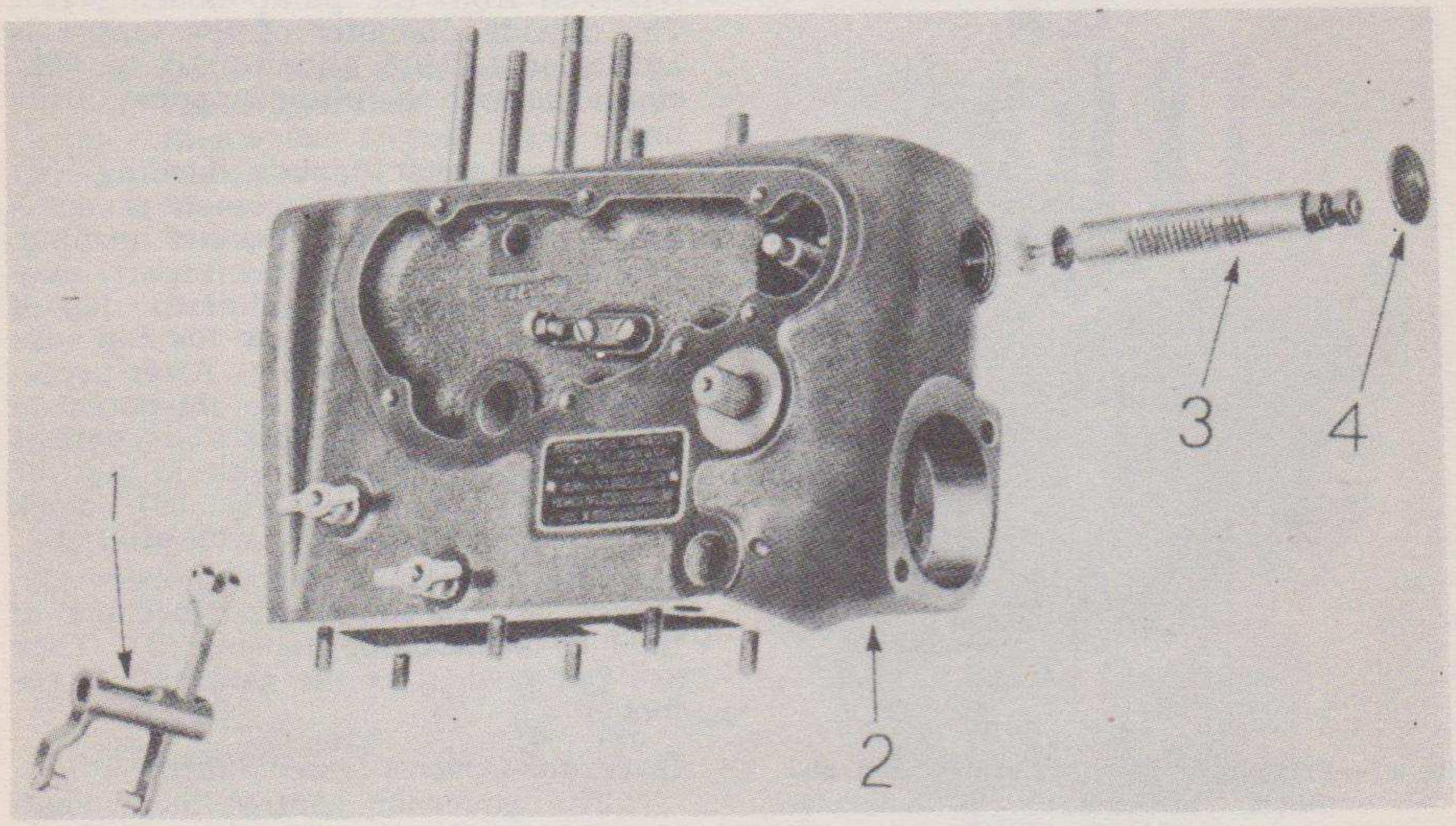

Fig. 80—Governor fork and control rack removed. (1) Governor fork. (2) Pump housing. (3) Control rack assembly. (4) Plug for pump housing.

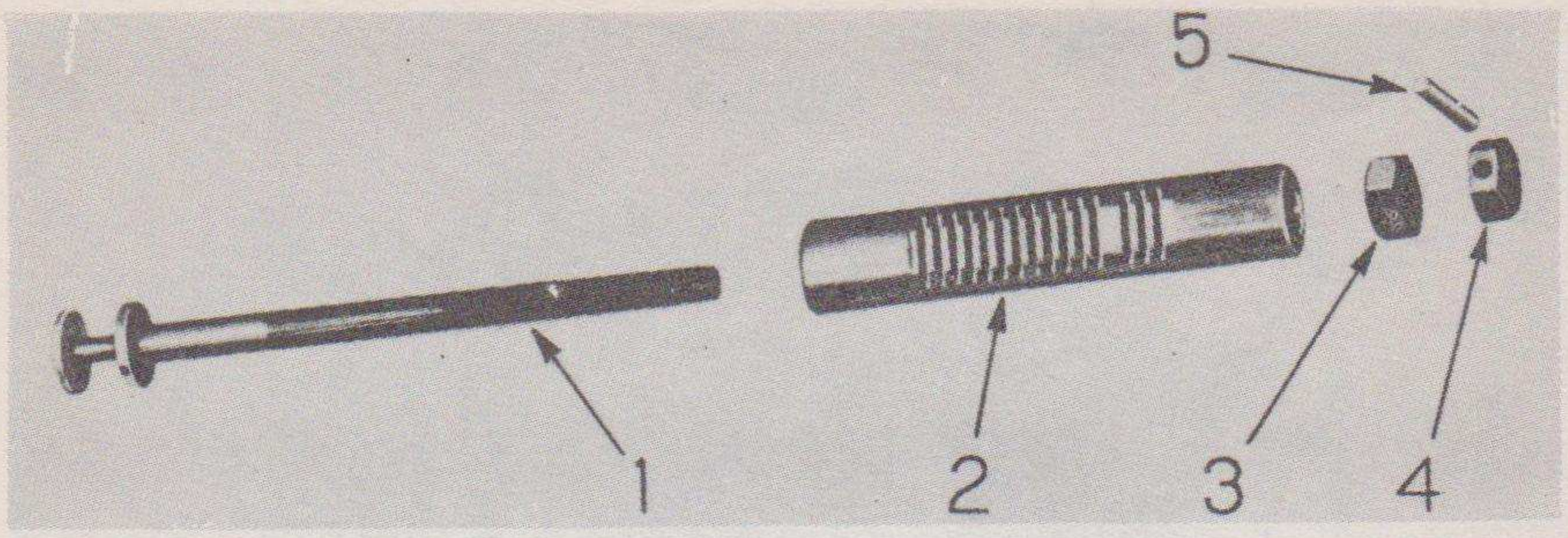

Fig. 81—Control rack assembly. (1) Control rack adjusting rod. (2) Control rack. (3) Adjusting rod lock nut. (4) Adjusting rod nut. (5) Adjusting rod nut rivet.

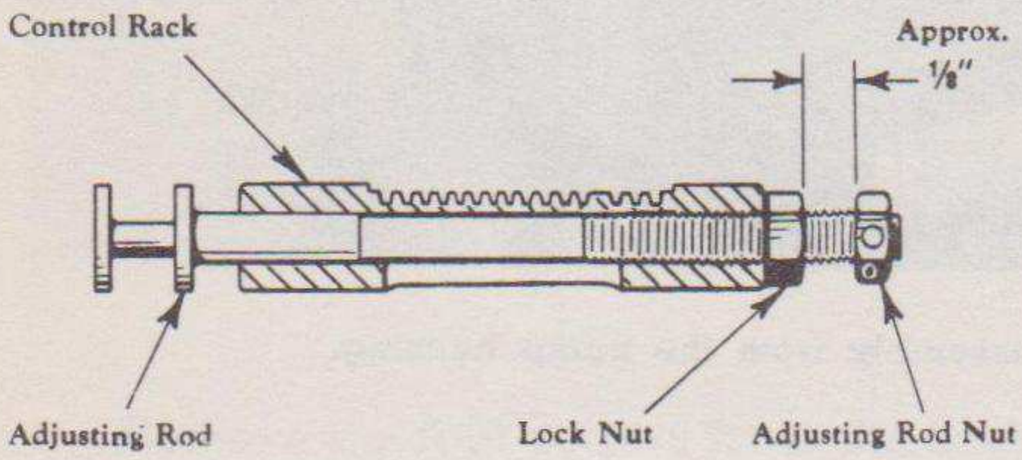

Fig. 82—Cross-section of control rack assembly.

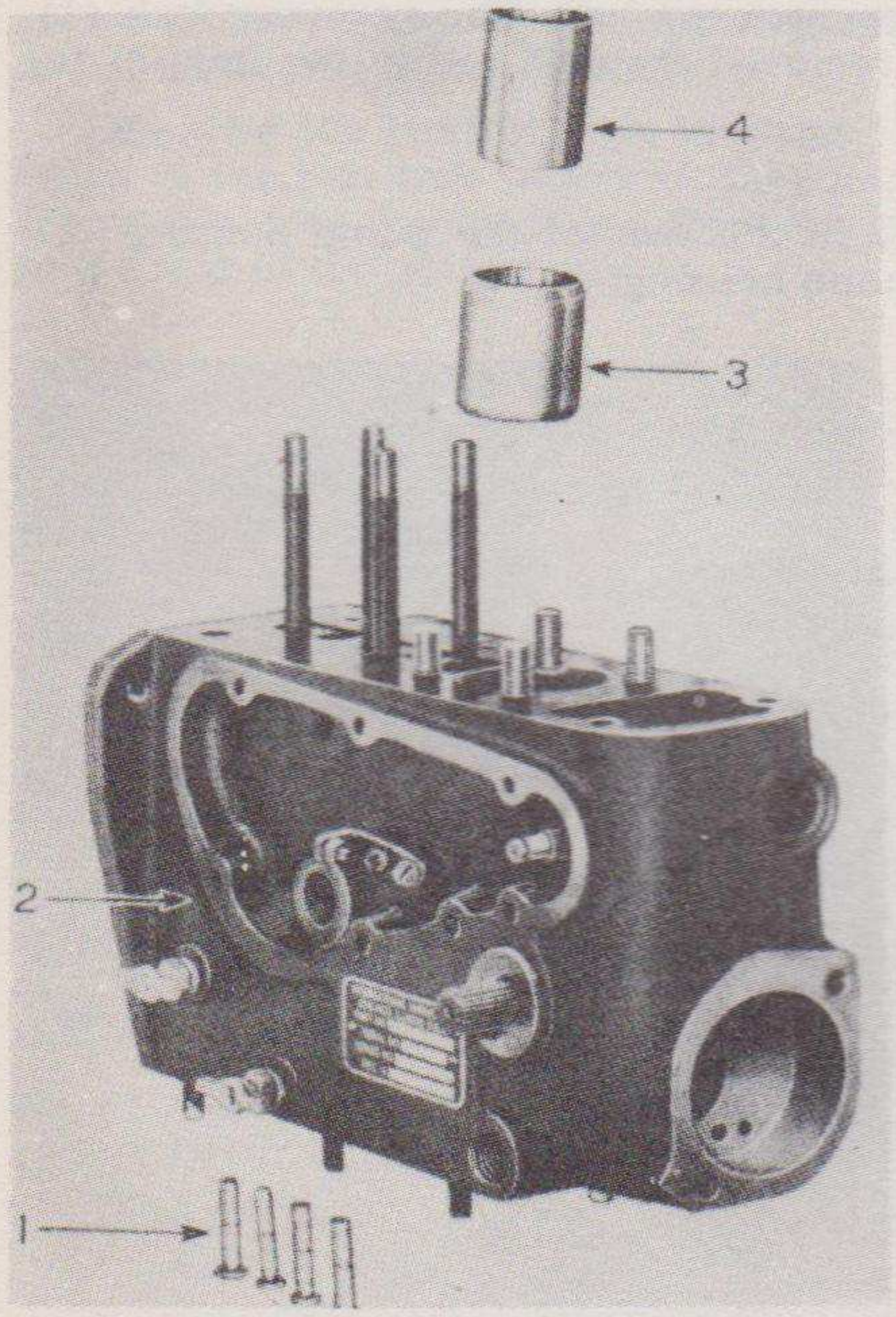

Fig. 83—Plunger tappet, its bushing and distributor valve tappets. (1) Distributor valve tappets. (2) Pump housing. (3) Plunger tappet bushing. (4) Plunger tappet.

The parts making up the control rack assembly are shown in Figure 81. Driving the pin (5) from the control rack adjusting rod nut (4) allows the nut (4) as well as the control rack adjusting rod lock nut (3) to be removed. The adjusting rod (1) can be unscrewed from the control rack (2).

The interior surfaces of the spool end of the control rack adjusting rod should be smooth. No appreciable wear should be present at this point. Inspect the teeth of the control rack for possible wear. Backlash between the teeth of the rack and the plunger control gear is limited to .002" to .004".

Plunger Tappet and Bushing

With the control rack removed, the plunger tappet (3), Figure 83, can be removed from the pump housing (2). The outside diameter of the tappet is 1.1235" to 1.1240", giving .001" to .002" clearance with the plunger tappet bushing.

The plunger tappet bushing (4) may be removed if replacement is necessary. The steel-back, babbitt bushing, furnished as a replacement part, may be pressed in place so that the top of the bushing is 1⅝" below the top surface of the pump housing. After pressing in place, it must be jig-bored to 1.1250" to 1.1255". Unless a jig-bore is available, replacement should not be attempted. Approximately .007" stock must be removed all the way around.

The distributor valve tappets (1), Figure 83, are shown here because of their fit in the pump housing (2). They are removed after the camshaft is removed.

Governor Control Lever Shaft

The governor control lever shaft may be removed at any time after the removal of the governor. Ordinarily, removal should never be necessary.

Fig. 84—Removing nut from taper pin in governor spring lever on governor control lever shaft.

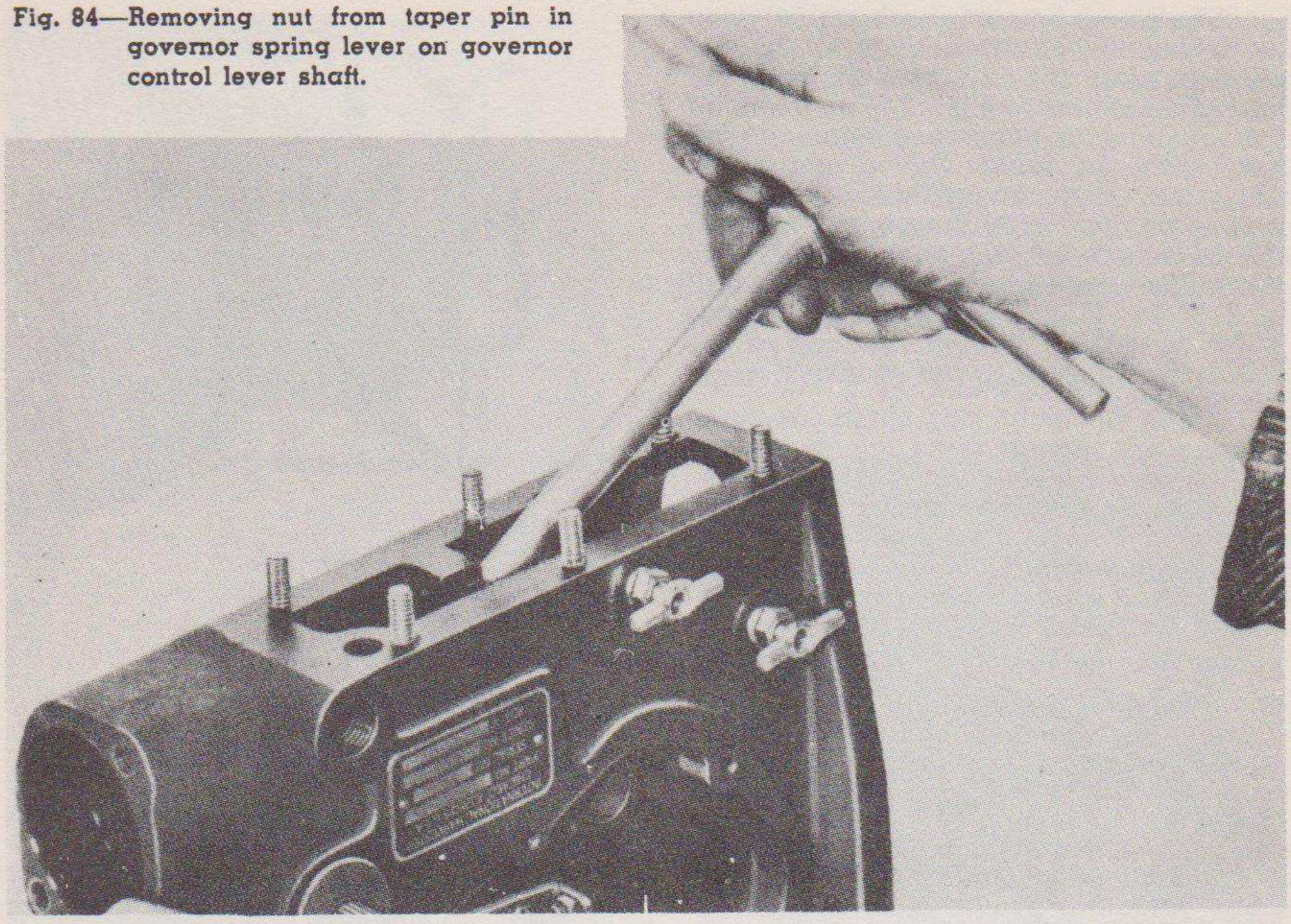

The entire assembly is shown in exploded form in Figure 85. In order to remove the control lever shaft (1), the governor spring lever screw (7) must be removed. To accomplish this, the nut on screw (7) may be removed with a wrench inserted through the base of the housing as shown in Figure 84. From the same position, a drift may be used to push the control lever shaft screw (7) from the control lever (8).

The control lever shaft (1) can now be pulled from the housing, freeing the control lever shaft washer (2) and the control lever shaft felt (3). The oil seal (4) may be removed for replacement if so desired. The shaft (1) with washer (2) may be used to drive the oil seal into the housing.

Fig. 85—Control lever shaft assembly. (1) Control lever shaft. (2) Control lever shaft washer. (3) Control lever shaft felt washer. (4) Control lever shaft oil seal. (5) Pump housing bushing. (6) Pump housing plug. (7) Governor spring lever taper pin. (8) Governor spring lever with high idle and shut-off screws.

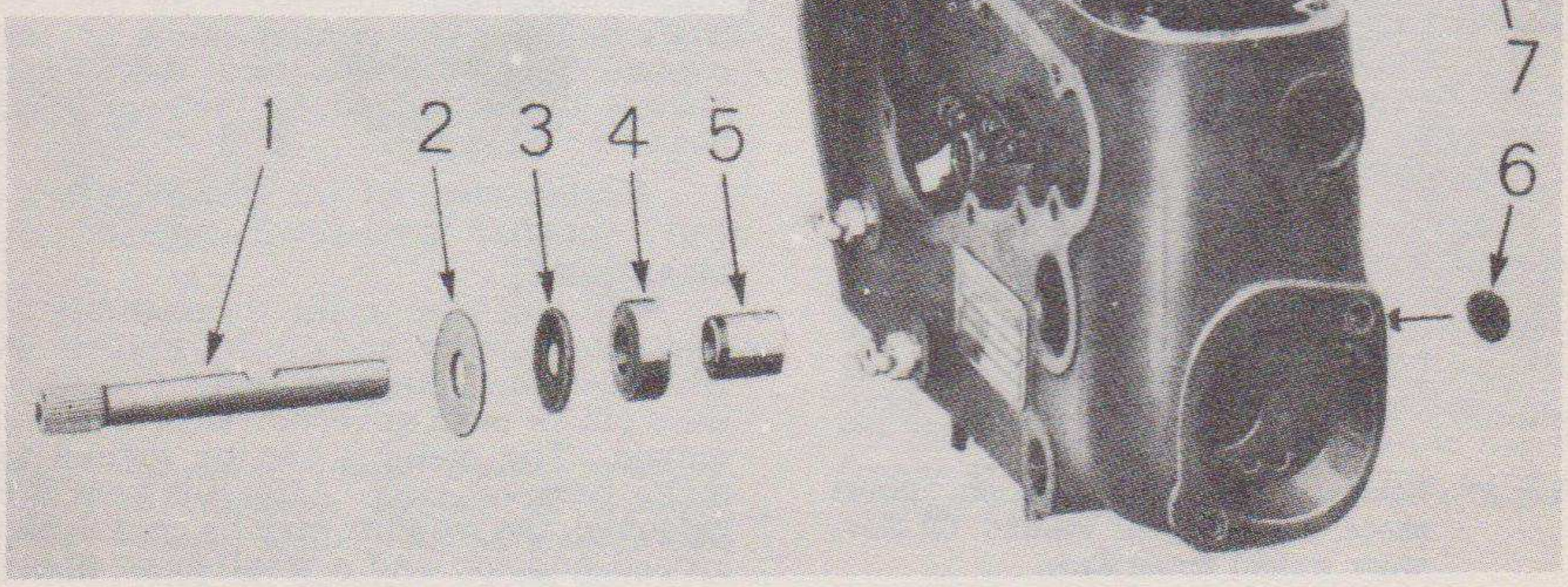

The pump housing bushing (4) may be driven out of the housing if the expansion plug (6) is removed from the back side of the pump. Replacement of this bushing is very rare. It is shown here only to show the construction. After assembly, this grey-iron bushing is line-reamed with the mating hole on the back side of the pump to .406" to .409". The shaft diameter at the oil seal is .413" to .415", and at the bushing is .4050" to .4055". The outside end of the bushing is flush with the counterbore in the housing.

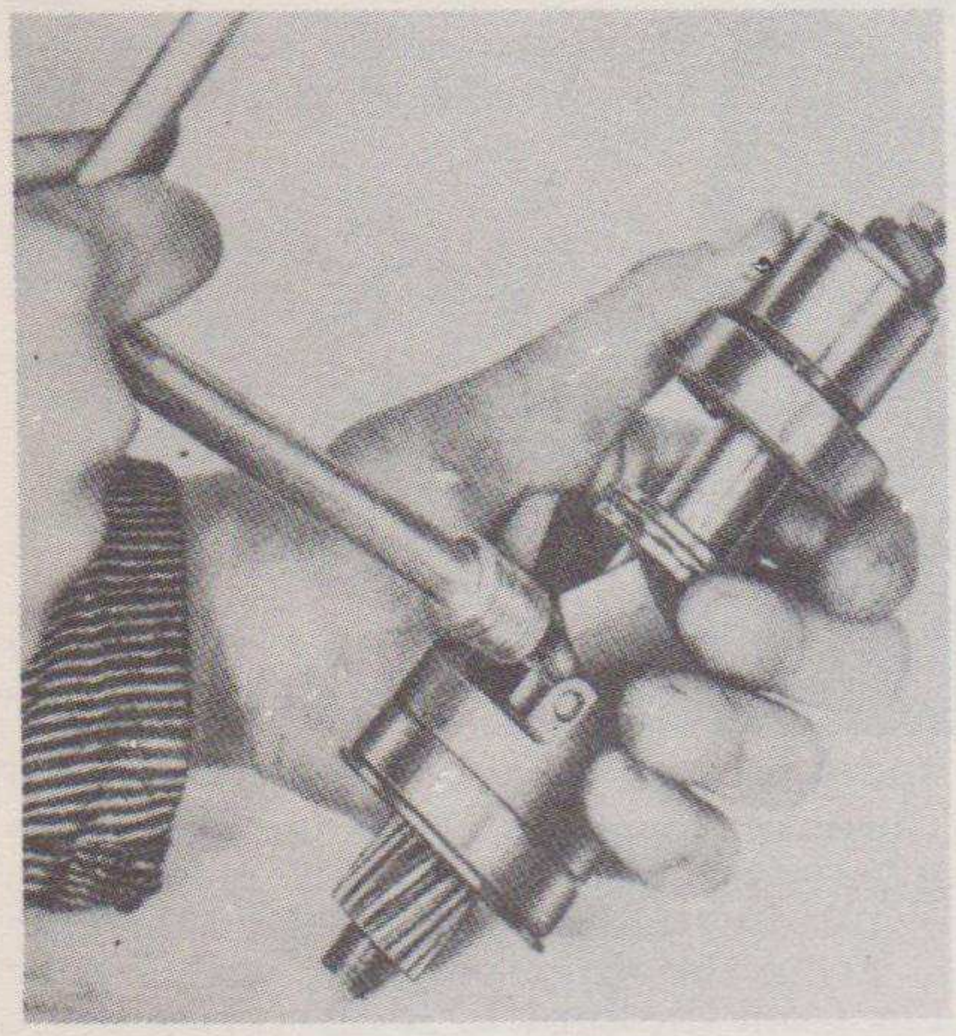

Fig. 86—Removing governor weight thrust shoe pin.

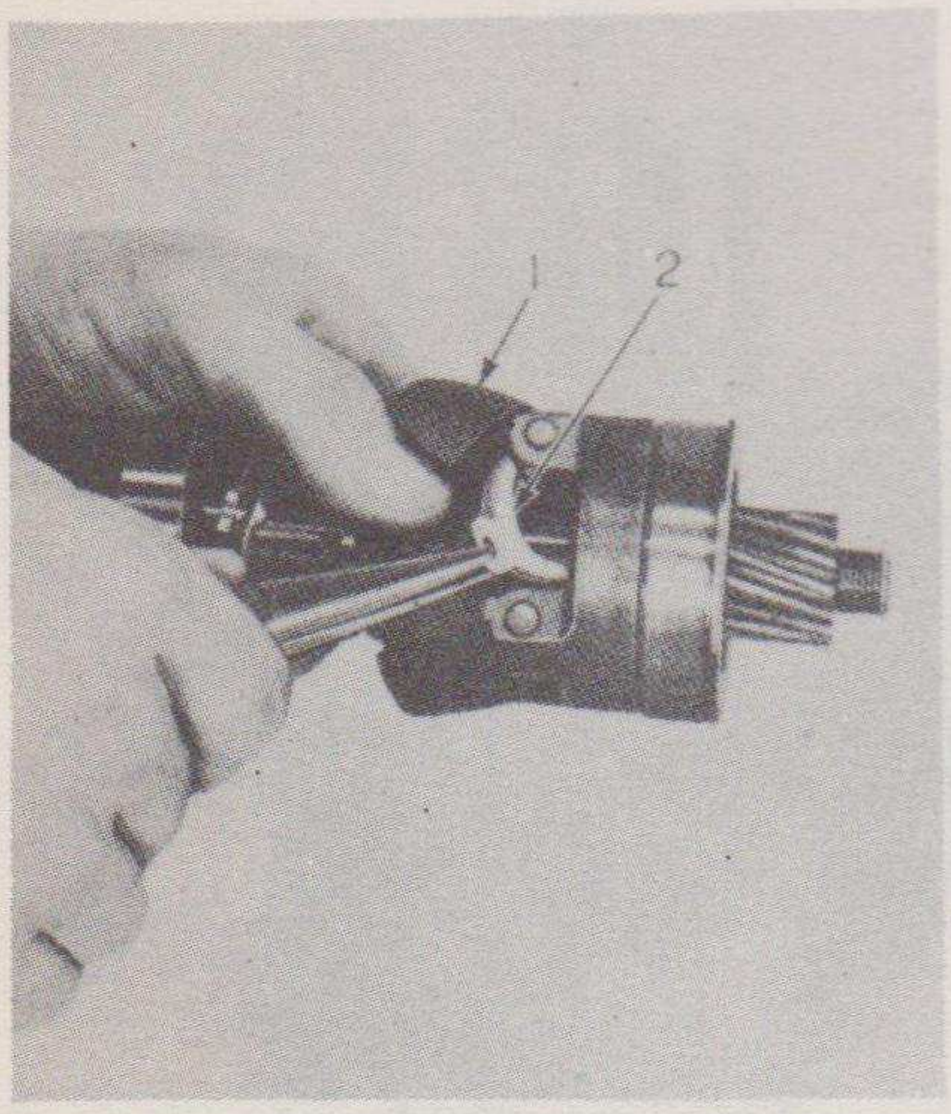

Fig. 87—Removing governor weight thrust shoes. (1) Governor weight. (2) Governor weight thrust shoe.

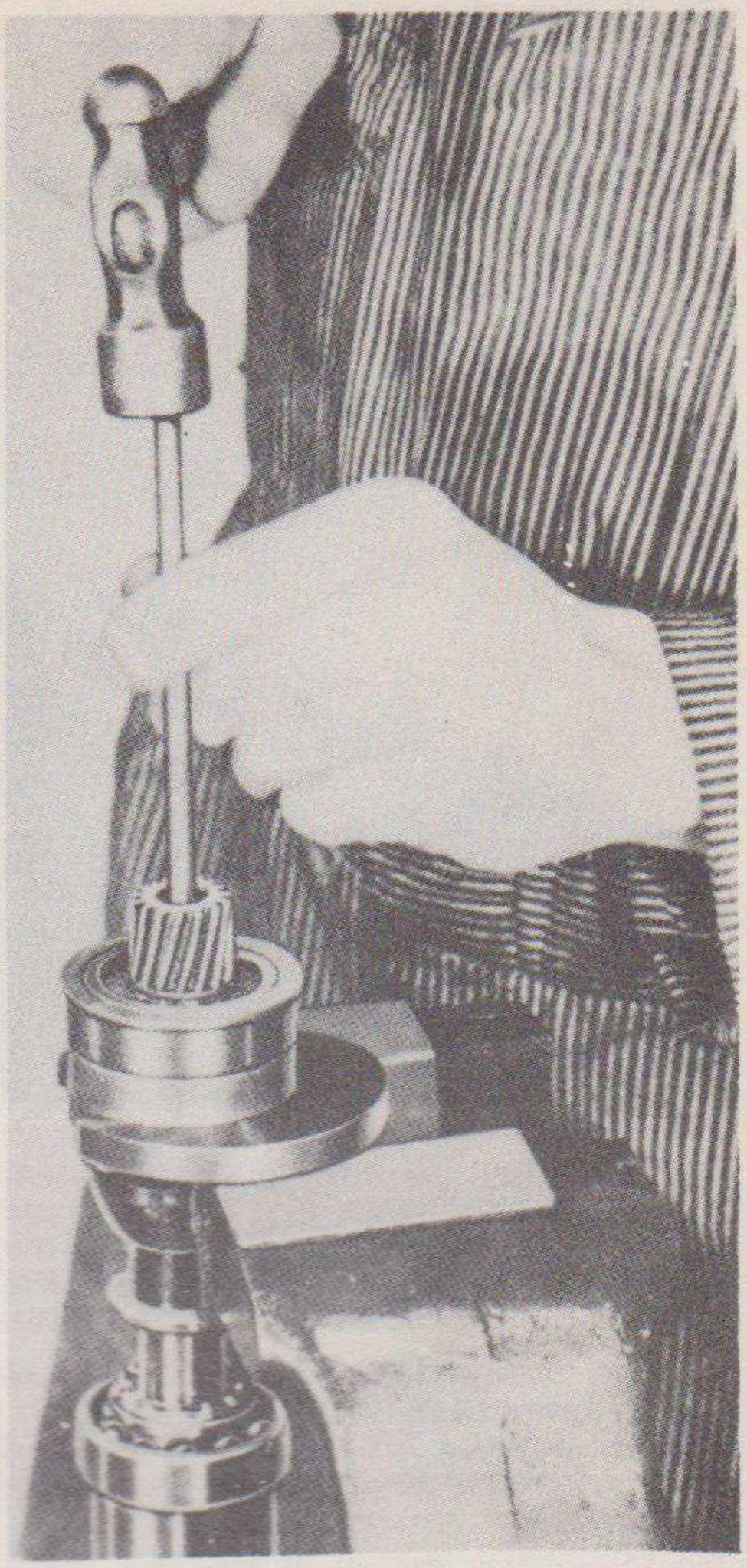

Fig. 88—Removing governor weight carrier assembly with governor shaft pinion, bearing, and bearing cage, using special tool to suspend unit over a vise.

The lip of the control lever shaft oil seal (4) faces the inside of the housing. The mark on the end of the control shaft matches the similar mark on the control lever. These two items can always be assembled to their original position.

Replacement of the governor control lever shaft is the reverse of removal.

DISASSEMBLY

The first step in the disassembly of the governor is shown in Figure 86 whereby the governor-weight thrust-shoe pin in each governor weight is removed. The weights can be spread to make removal easy. After the pins are removed, the weights may be held in the spread position and a small-nose pliers

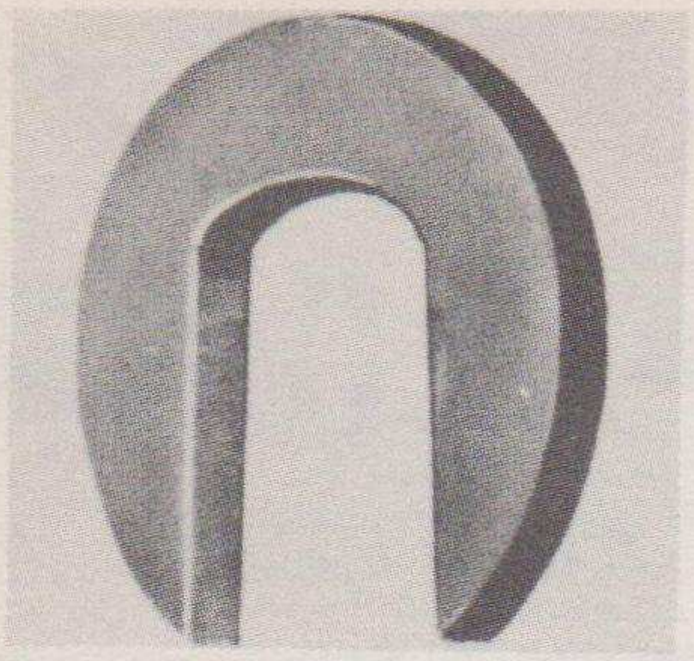

Fig. 89—Governor weight carrier service tool.

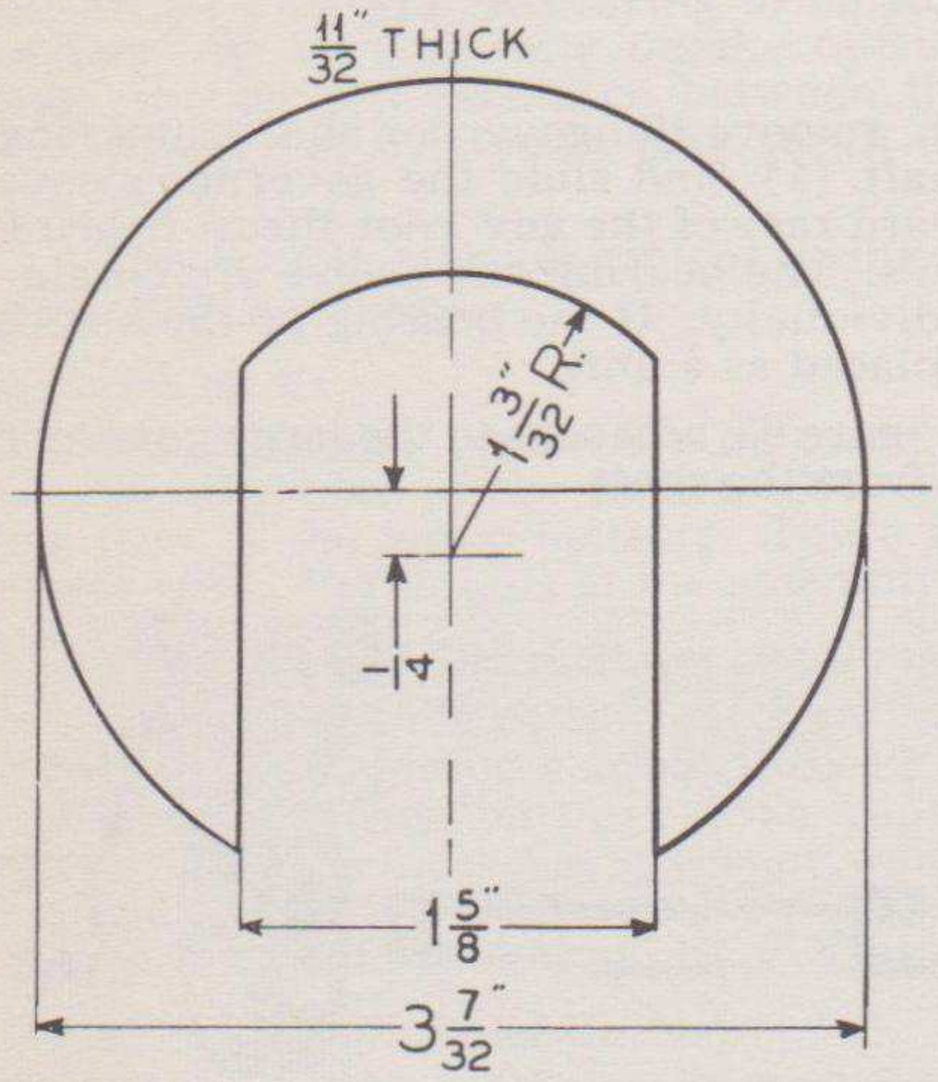

Fig. 90—Dimensions for making governor weight carrier service tool.

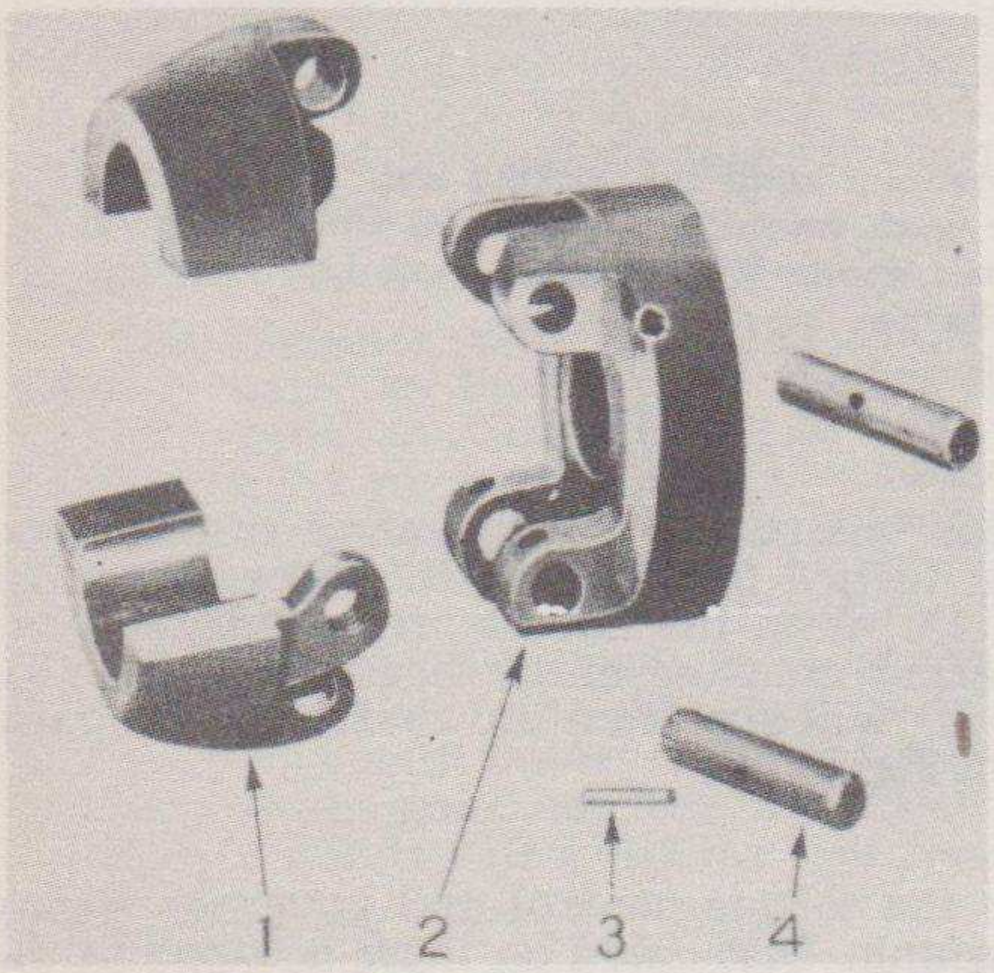

Fig. 91—Governor weight carrier assembly. (1) Governor weight. (2) Governor weight carrier. (3) Governor weight rivet. (4) Governor weight pin.

applied to the governor-weight thrust-shoes for their removal. Note the position of the pliers on the shoe in Figure 87. With the thrust shoes resting against the governor weight carrier, there is only sufficient room to raise them straight out. The short end of the shoe comes out first. After a little practice the removal is a simple matter. The chamfered side of the shoe faces the governor-weight carrier.

Using a horseshoe-type of holder similar to the tool shown in Figures 89 and 90, drive the governor shaft from the governor shaft pinion, the governor shaft bearing and bearing cage, and the governor weight carrier with weights as shown in Figure 88. The keys (3) and (2), Figure 92, for the pinion and governor weight carrier may then be removed from the governor shaft (1).

Governor Weight Carrier

If the governor weight pins (4) have excess play in the governor weight carrier (2), the unit may be disassembled into the parts shown in exploded form in Figure 91. The pins (4) are normally .0003" to .0009" loose in the carrier (2). Pins (4) are tight in the governor weights (1) and riveted in place.

The governor weight (1) may be separated from the carrier (2) by clamping the governor weight carrier in a horizontal position in a vise and driving the governor weight pins (4) out with a drift. Remove the sheared rivets (3) from the pins (4) and governor weights (1). The rivets (3) are flanged at one end for ease of assembly, having a total length of ½" and are .070" to .073" in diameter.

The governor weight pins (4) are normally .2814" to .2817" in diameter for the .2820" to .2823" bores in the governor weight carrier (2), allowing .0003" to .0009" looseness when assembled. If replacement pins (4) are installed, the pins must be pushed into the governor weights (1) when in the assembled position, after which a No. 49 hole (.073") must be carefully drilled through the pins (4). Governor weight rivets (3) may then be driven through the governor weights (1) and the governor weight pins (4). Peen over the end of the rivet.

The pins (4), with the governor weights assembled, must turn freely in the carrier. Outward travel of the weights is limited by the carrier to prevent the weights from possibly striking the pump housing. Weights should move freely from the closed position to the limited stop position.

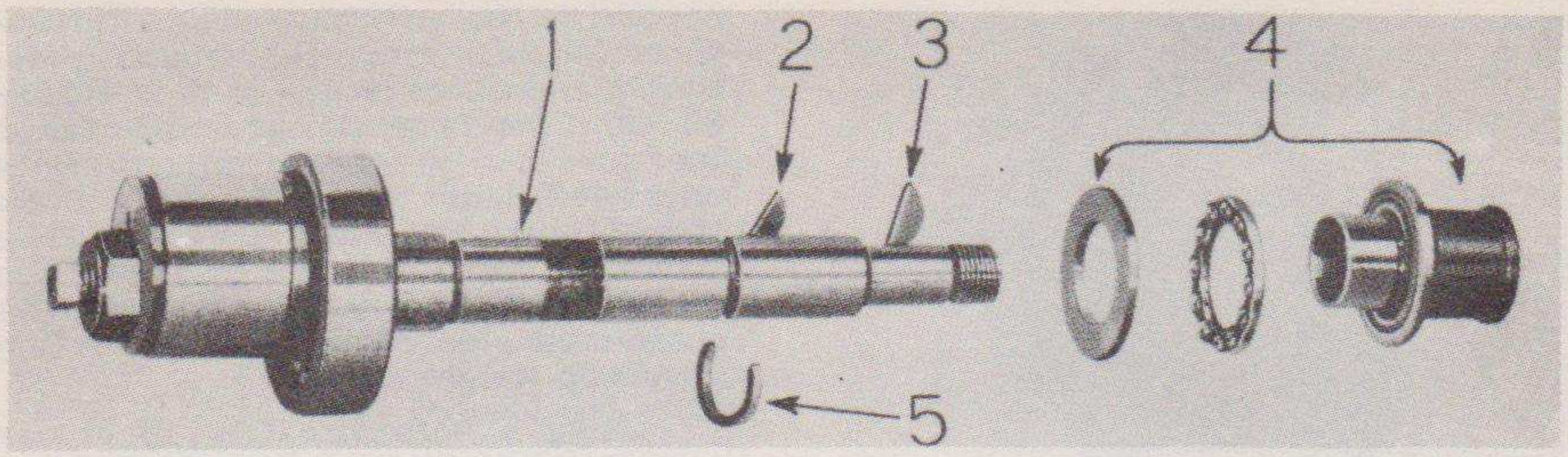

Fig. 92—Governor shaft and thrust bearing. (1) Governor shaft. (2) Governor shaft key (small). (3) Governor shaft key (large). (4) Governor sleeve with thrust bearing. (5) Governor shaft snap ring (small).

Using a horseshoe-shaped tool, or a punch, remove the governor shaft snap ring (small) (5), Figure 92, from the governor shaft (1), and slide the governor sleeve with the bearing (4) from the shaft. The forward race of the governor thrust bearing should not be removed from the governor sleeve. The bearing and sleeve are obtainable only as a unit as service parts and not individually. If the bearing or the sleeve is worn too much, the parts will have to be replaced as a unit.

After removing the snap ring (large (7), Figure 93, adjacent to the large governor shaft bearing (6), the bearing may be pressed from the shaft.

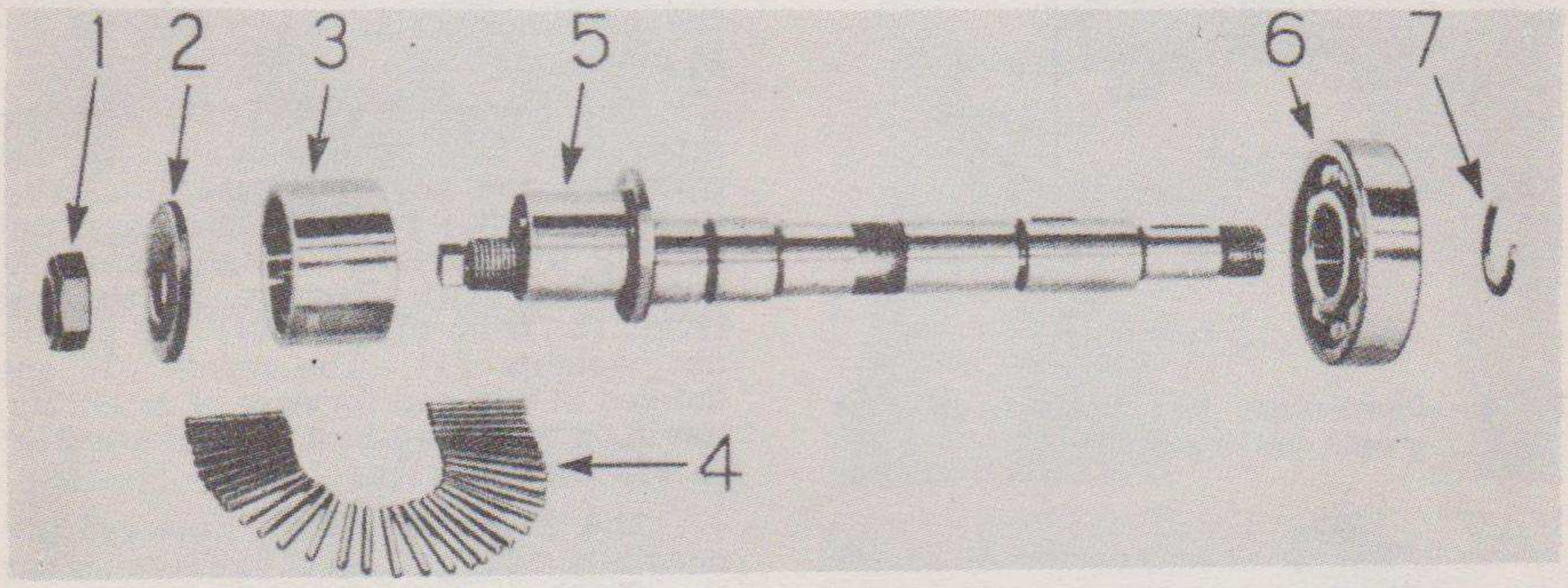

Fig. 93—Governor shaft and bearings. (1) Governor shaft self locking nut. (2) Governor shaft eccentric washer. (3) Governor shaft eccentric bearing. (4) Governor shaft eccentric bearing rollers. (5) Governor shaft. (6) Governor shaft ball bearings (large). (7) Governor shaft snap ring (large).

By holding the governor shaft in a fixture similar to that sketched, the ¾" hex, self-locking, governor shaft nut (1), may be turned from the shaft. Figure 96 shows this block in use while tightening the nut (1). With the nut (1) removed, the governor shaft eccentric washer (2), the governor shaft eccentric bearing sleeve (3), and the needle bearing rollers (4) (36 rollers) will slip from the shaft. All the parts of the governor shaft assembly are shown in Figure 94.

REPAIR

No particular repair can be applied to the torque control and governor spring assemblies, or to the plunger tappet and bushing. Discussion on these is found in the removal procedure in this section.

Governor Fork and Shaft

The governor fork, Figure 80, should show no definite signs of wear. Inspect the upper end where it contacts the spool of the control rack, as well as where the lower

end of the governor fork arm pins contact the governor weight thrust bearing. The round portion of the upper end is .3740" to .3745" in diameter, while the pins are finished to .2495" to .2500". The space between the ends of the spool on the control rack adjusting rod is .375" to .376". There should not be excessive play at this point. In operation, there is little or no relative motion between the pins in the lower end of the governor fork and the thrust bearing of the governor sleeve. The governor springs hold the fork against the forward race, keeping the race stationary while the sleeve and bearings rotate.

The governor fork shaft spacer (2), Figure 78, has an inside diameter of .3437" to .3442" to match the .3430" to .3435" portion of the governor shaft. The outside diameter of the spacer is .5000" to .5005" and contacts the rollers in the needle bearing. Since the movement of the governor shaft is very limited, there should be no appreciable wear of the above parts. If rollers have become corroded, rusty or worn, the bearing should be driven from the housing and replaced with a new one. When pressed in place, the outer end of the bearing is flush with the finished face of the housing at this point. Use a driver similar to that sketched in Figure 99 whenever installing this type of bearing to be sure not to crimp the end piece down over the rollers. By driving only on the outside rim, this possibility is eliminated. When new, the normal clearance between the spacer and the bearing is .001" to .0015". Excess play at this point may result in faulty governor action; no binding can be tolerated.

The fit of the torque control spring lever and the spacer is covered in the removal part of this section.

Control Rack

No particular repair can be made on the control rack, Figures 80 and 81. The outside diameter of the rack is .5610" to .5615", giving .001" to .002" clearance with the bore in the pump housing. There should be no appreciable wear on the outside of the rack. For details of the assembly, see the removal part of this section.

Governor Weight Trust Shoes and Pins

The small ends of the governor weight thrust shoe pins, Figure 94, ground to .1865" to .1870" giving a .0005" to .0015" loose fit with the bore in the governor weight thrust shoe. When pins are worn, replacement is necessary. The chamfered side of the thrust shoe faces the governor weight carrier. Shoes are .340" to .344" wide, and are ground on the long side. The distance from the .1875" to .1880" hole to the long side is very accurately held to .1705" to .1710".

Governor Weights and Carrier

The assembly and repair of the governor weights and carier is detailed under that heading in the disassembly part of this section.

Governor Shaft Pinion and Bearing

The ball bearing pressed off with the pinion should be in good condition; it rarely requires replacement. Two teeth of the pinion are punch-marked; line up the included tooth space with the marked tooth on the camshaft gear. This gear is file hard; it should last indefinitely. If the pinion is worn, replace both the pinion and camshaft gear.

Governor Sleeve and Thrust Bearing

The diameter of the governor shaft, where the governor sleeve, Figure 92, slides when actuated by the governor weight shoes, is accurately ground to .6860" to .6865" giving a .0008" to .0028" sliding fit with the governor sleeve. The end of the sleeve contacting the governor weight shoes should be smooth. In manufacture, the governor thrust bearing is pressed on the governor sleeve after which the bore is finished to give the sliding fit listed above. As service parts, the sleeve and bearing are obtainable only as a complete assembly. The forward race and ball carrier are loose. Inspect the forward face of the forward race, as well as the recess of both races. This assembly must slide freely on the shaft and transfer the action of the governor weights to the governor fork with the least amount of friction. There is relatively no motion between the pins on the governor fork and the forward race of the thrust bearing. This race ordinarily stands still while the rear race and balls rotate with the governor weights.

Governor Shaft Bearing (Large)

Since the eccentric portion of the governor shaft which actuates the pump plunger is supported only by the large ball bearing, Figure 93, its condition should be carefully noted. Be sure the balls are free of pits and spin freely on the inner race.

Governor Shaft Eccentric Bearing

The sleeve of the governor shaft eccentric bearing, Figure 93, has little relative motion with the smooth base of the plunger tappet. The principal motion is between the quills or rollers of the bearing rolling on the eccentric bearing journal of the governor shaft and the inside of the bearing sleeve. The outside diameter of the bearing sleeve is accurately ground to 1.436" to 1.437". The inside diameter of the sleeve is finished to 1.1733" to 1.1738". Each of the rollers is .0937" to .0939" in diameter.

With the governor shaft eccentric washer assembled to the governor shaft, the end play of the sleeve is .010" to .025". The bearing journal is accurately ground to .9845" to .9850" diameter.

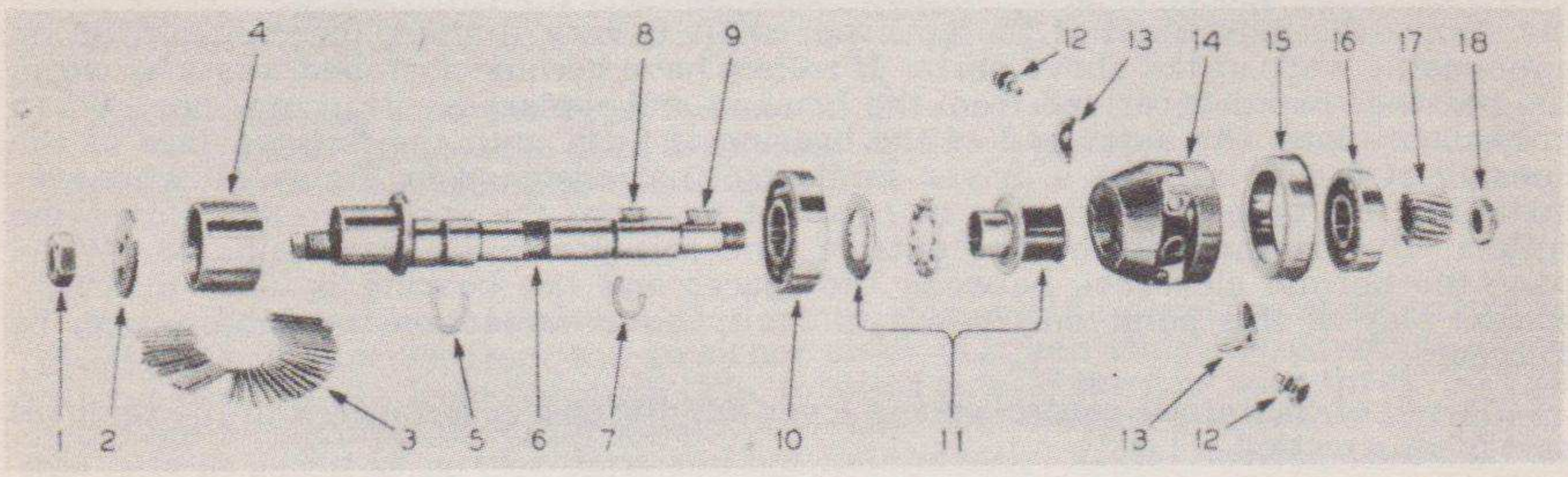

Fig. 94—Governor shaft unit disassembled. (1) Governor shaft self locking nut. (2) Governor shaft eccentric washer. (3) Governor shaft eccentric bearing rollers. (4) Governor shaft eccentric bearing. (5) Governor shaft snap ring (large). (6) Governor shaft. (7) Governor shaft snap ring (small). (8) Governor shaft key (small). (9) Governor shaft key (large). (10) Governor shaft ball bearing (large). (11) Governor sleeve and thrust bearing. (12) Governor weight thrust shoe. (13) Governor weight thrust shoe pin. (14) Governor weights and carrier. (15) Governor shaft bearing cage. (16) Governor shaft bearing (small). (17) Governor shaft pinion. (18) Governor shaft self locking nut.

Individual rollers (36 required) should be absolutely smooth and free of all rough spots. The finish of both the inside and outside of the bearing sleeve should be in good condition. Replace rollers and sleeve if wear is doubtful, since this shaft rotates at twice engine speed.

REASSEMBLY

Starting from left to right, the items exploded in Figure 94 may be replaced in the order shown. Start with the governor shaft eccentric bearing sleeve (4). After slipping

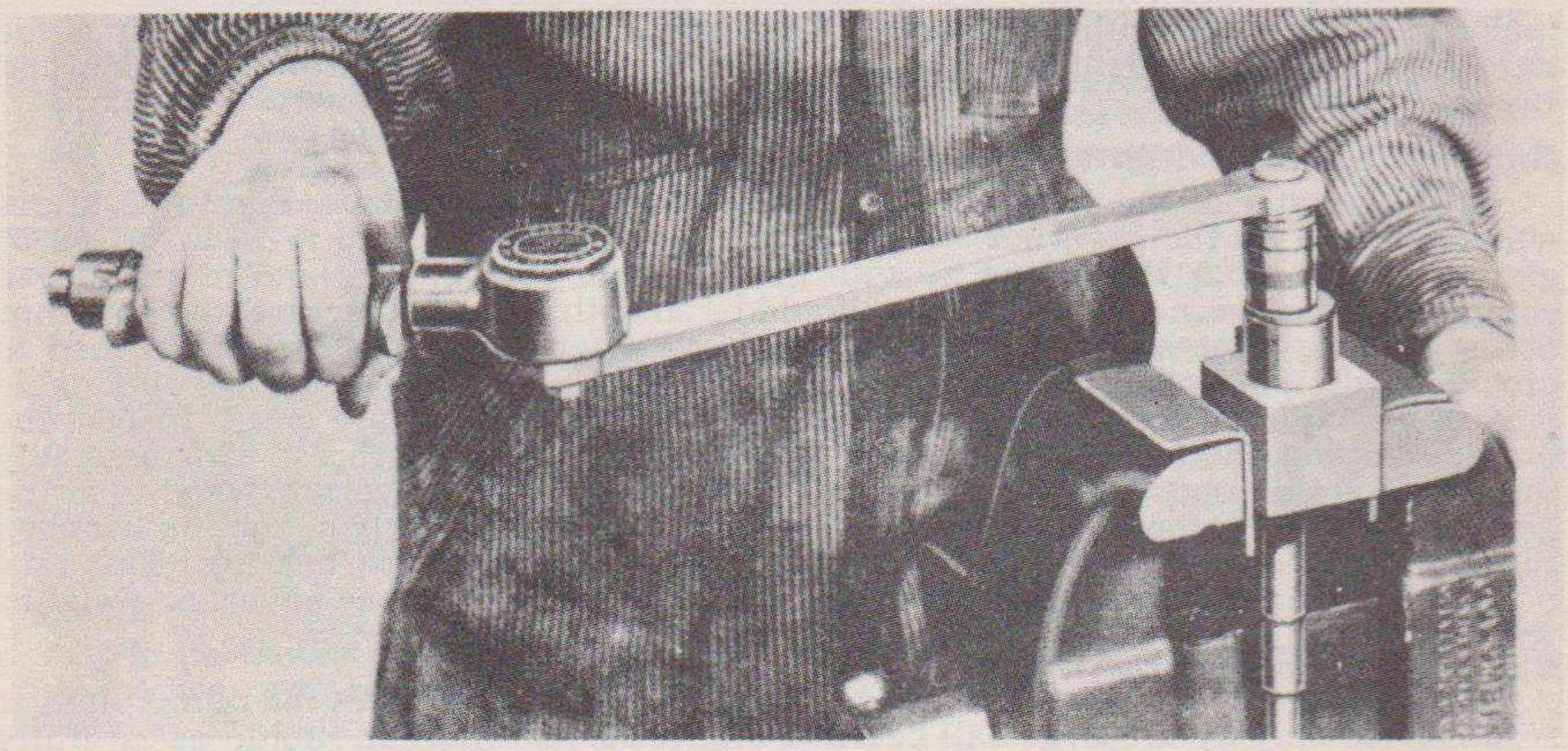

Fig. 96—Tightening governor shaft self-locking nut to 45 ft.-lbs. torque using special service tool to hold shaft in a vise.

the clean sleeve over the eccentric bearing journal, place 36 clean rollers (3), no more or no less, between the sleeve (4) and the journal. After they are in position, locate the governor shaft eccentric washer (2) over the pin in the end of the shaft and turn the self-locking governor shaft nut (1) on by hand. Set the shaft in a fixture similar to that shown in Figures 97 and 98 and draw down nut (1), Figure 94, to 45 ft.-lbs. torque with a torque wrench as shown in Figure 96. Check the end play of the sleeve of the eccentric bearing; it should be .010" to .025"

Press the governor shaft bearing (large) (10), Figure 94, on the governor shaft (6) and attach the governor shaft snap ring, (large) (5) when the bearing is against the shoulder of the shaft. Then slide the governor sleeve and thrust bearing assembly (11) over the shaft, and attach the governor shaft snap ring (small) (7). The thrust bearing end goes on first. Place the governor weight carrier key (8) in the shaft, and press the governor weight carrier assembly (14) on the shaft tight against the snap ring (7).

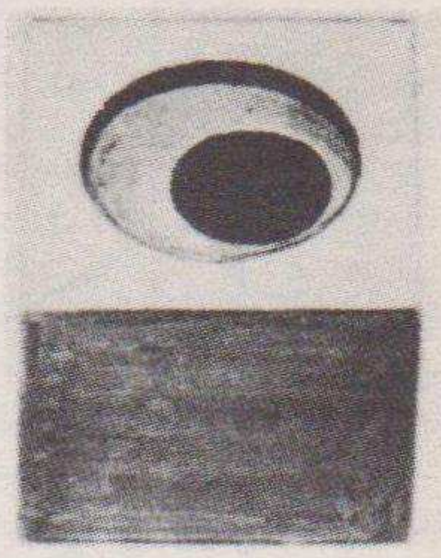

Fig. 97—Governor shaft eccentric bearing service tool.

Spread the governor weights and assemble both the governor weight thrust shoes (12) and their pins (13) with lockwashers, as indicated in Figure 87. The chamfered side of the shoes face the governor weight carrier. With the shoes assembled, slide the sleeve assembly (11), Figure 94, into contact with the thrust shoes. The governor weights may have to be spread slightly to do so. Then test the assembly for free movement by making the weights move the sleeve at least $\frac{21}{64}$" toward the eccentric bearing. This is the normal movement of the sleeve.

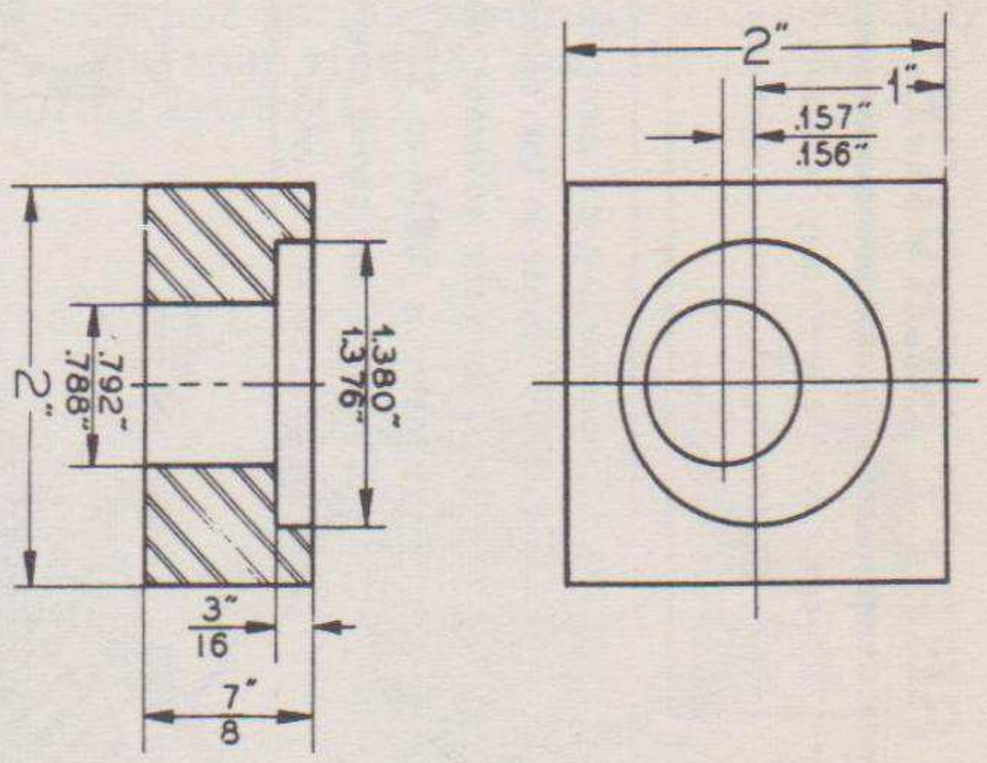

Fig. 98—Dimensions for making eccentric bearing service tool.

Now the governor shaft ball bearing (small) (16), may be assembled to its bearing cage (15), and the unit pressed on the governor shaft tight against the governor weight carrier (14). Place the pinion gear key (9) in the governor shaft and press the governor shaft pinion (17) tight against the inner race of the bearing (16). The self-locking governor shaft nut (18) should be tightened to 40 to 50 ft.-lbs. after the camshaft gear is assembled, as outlined in the replacement part of this section.

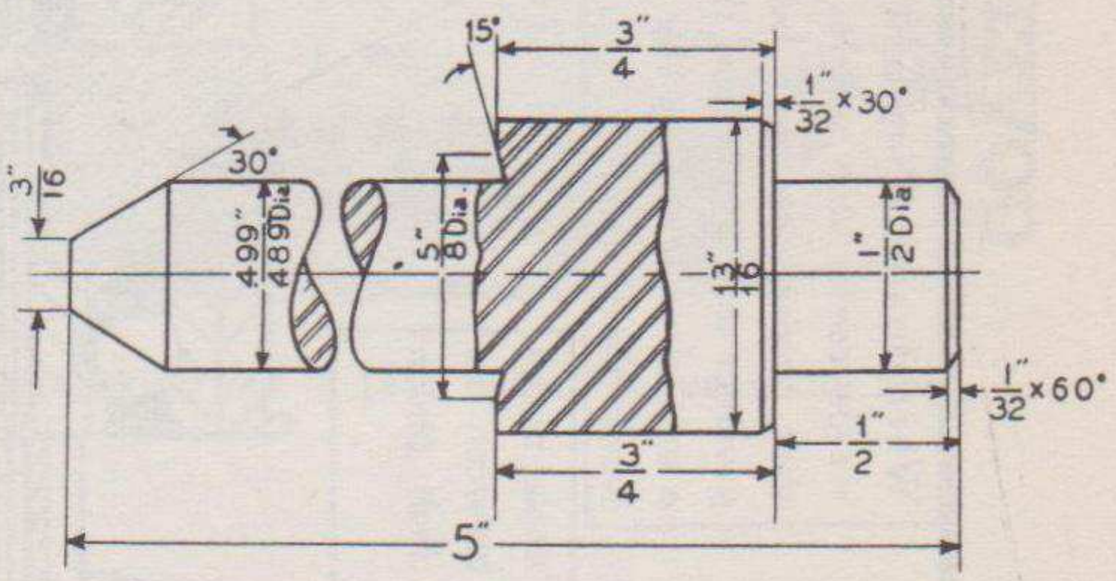

Fig. 99—Dimensions for making a driver for pressing governor fork shaft needle bearing into injection pump housing.

REPLACEMENT

If the camshaft has been removed during the removal procedure, it may be replaced. Be sure the distributor valve tappets are in their respective places in the pump housing before doing so. Do not replace the camshaft bearing retainer, nor the camshaft gear.

Replace the governor control lever shaft, Figure 85, if it has been removed. Likewise, replace the plunger tappet and control rack, Figures 80 and 83. Be sure both slide freely before expanding the plug in the rear of the pump housing.

If the governor fork shaft needle bearing has been removed, replace it as outlined in the repair section, using the driver dimensioned in Figure 99. Then insert the governor fork through the opening in the base or front of the pump housing. This can best be done with the pump housing inverted and held in a vise with a block as shown in Figure 79. Locate the governor fork in its approximate final location.

GOVERNOR SHAFT SERVICE CHART

When disassembling, pull governor weight carrier with weights, governor shaft bearing cage with bearing, and governor shaft pinion from the shaft as a unit after removing the governor weight thrust shoes.

Governor weight rivets may be sheared off by driving the governor weight pins from the assembly.

End play of governor shaft eccentric bearing is **.010** to **.025"**. Rollers in the bearing (**36** required) are **.0937 - .0939"** diameter. There is little relative motion between bearing and plunger tappet. Bearing journal diameter on the shaft is **.9845 - .9850"**.

Tooth of camshaft with single punch mark should be located between the two teeth of governor shaft pinion similarly marked.

Governor weight pins are **.0003** to **.0009"** loose in the carrier and are a press fit in the governor weights. Pin diameter is **.2814** to **2817"**. Shape of weights and carrier prevent weights from opening too wide.

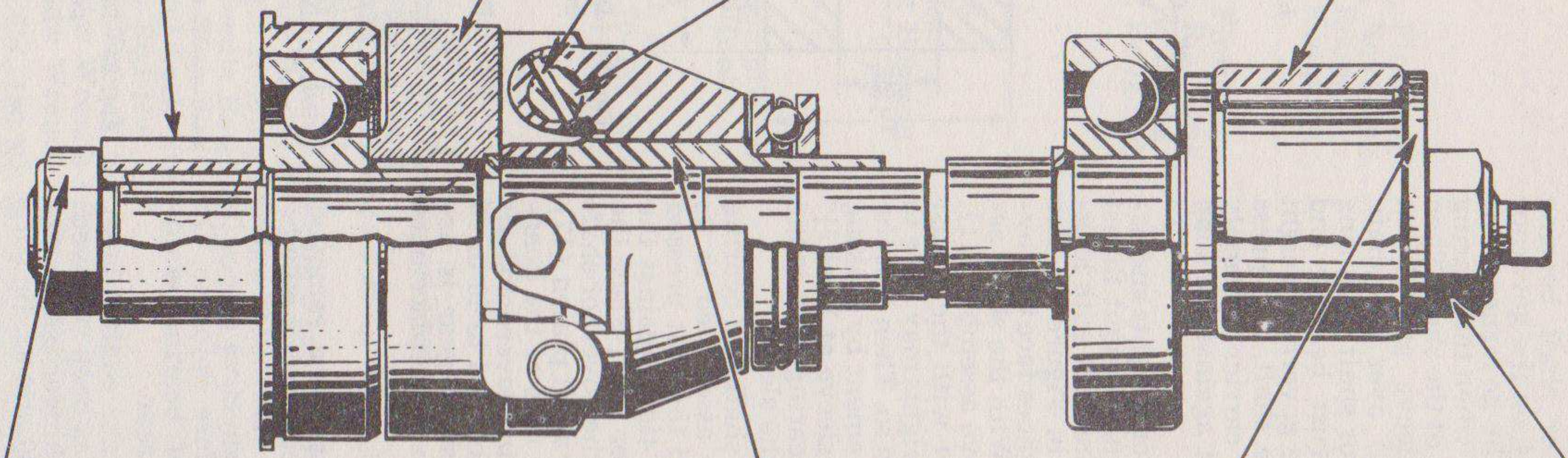

Remove governor shaft nut before removing camshaft gear. When tightening nut, draw down to **40-45** ft. lbs. torque.

Governor sleeve has **.0008** to **.0028"** sliding fit on the **.6860 - .6865"** portion of the governor shaft. Thrust bearing and sleeve are obtainable only as a unit.

Governor shaft eccentric washer fits over a pin in the shaft.

Tighten governor shaft nut to **40-45** ft. lbs. tension using a fixture to hold shaft from turning.

Fig. 95—Governor shaft unit Service Chart.

The entire governor shaft assembly, Figures 94 and 95, may now be pressed into the pump housing. Be sure to drive on the governor shaft pinion and not on the end of the shaft. Bring the governor fork into position so that the normal upper end rests between the ends of the spool of the control rack assembly. Be sure the governor shaft turns freely in the pump housing.

Press the governor fork shaft bearing (5), Figure 77, into the governor fork shaft bearing cage (2) and assemble the unit over the governor fork shaft (3). The key (4) may now be placed in the shaft (3) and the unit assembled through the governor fork and into the pump housing, engaging key (4) with the keyway in the governor fork. Support or back up the governor fork while assembling the governor fork shaft (3) through the governor fork. The pump housing back cover (7) with its gasket (6) may now be attached to the pump housing with four small fillister-head screws with their lockwashers. Replace the control rack locating screw (1) in the back side of the pump housing.

Slide the governor fork shaft spacer (2), Figure 78, over the threaded end of the governor fork shaft and into the needle bearing (1) in the pump housing. The small torque spring arm spacer (2) and the key (3), Figure 74, may now be placed in position on the governor fork shaft (1).

Lining up the keyway in the torque control lever, the torque control unit (4) and the governor spring unit (9) may be pushed onto the shaft (1) as one unit if the pin (7) and the snap ring (10) are in place. Be sure the hole in the governor spring adapter (3), Figure 76, lines up with the governor spring lever (11), Figure 74, while assembling in place. If necessary, remove the governor spring assembly and properly line up the hole in the governor spring adapter. The snap ring (8) may then be attached to the groove in the end of the governor spring lever (11).

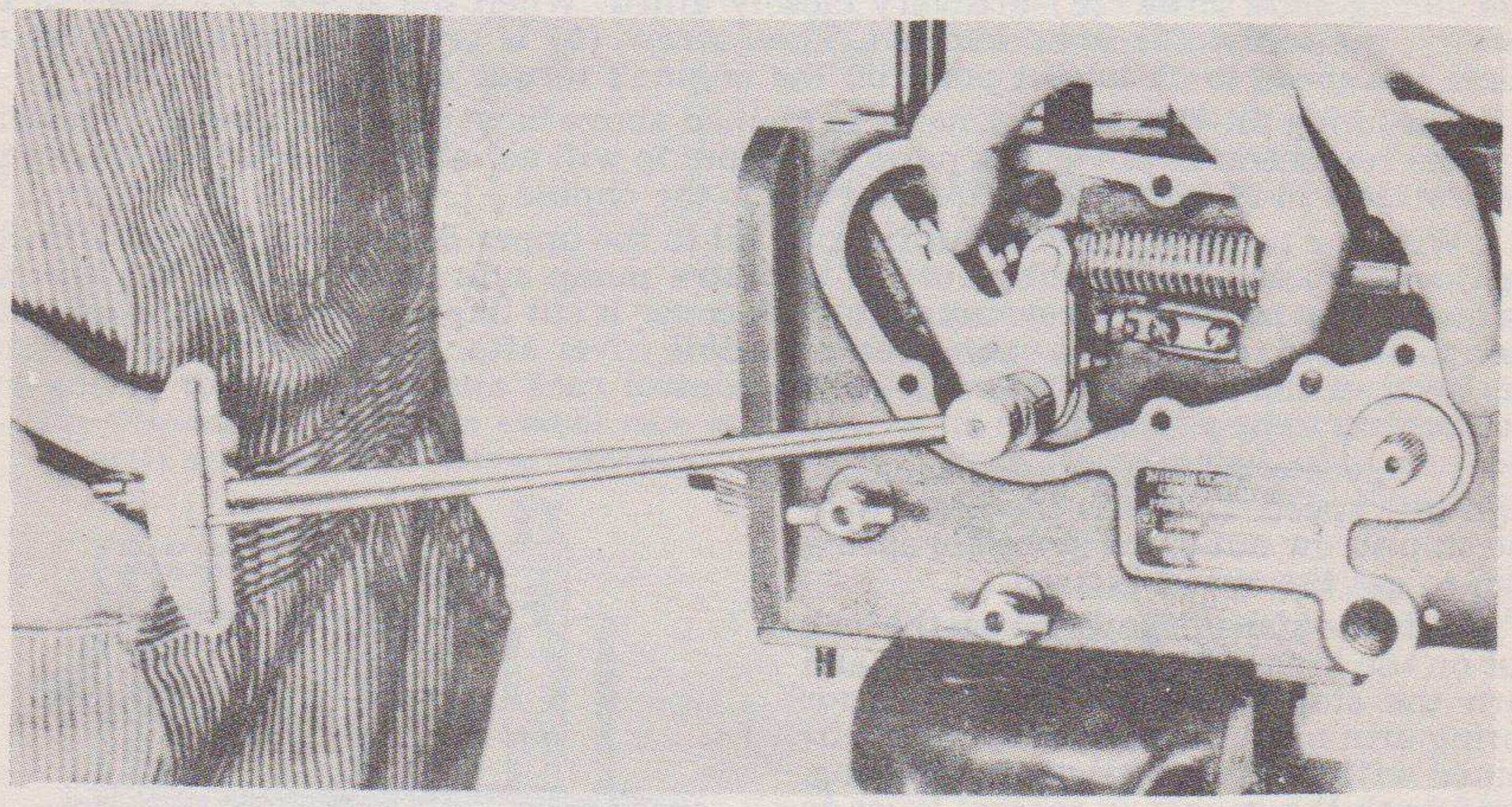

Fig. 100—Tightening governor fork shaft self-locking nut to 12½ ft.-lbs. torque while holding torque control lever to the rear.

Replace the torque spring arm spacer (5) on the governor shaft and turn on the self-locking governor fork shaft nut. Do not tighten this nut until the torque control lever is held firmly to the rear as far as possible, as shown in Figure 100. While so doing, tighten the nut to 12½ ft.-lbs. torque with a tension wrench.

Replace the camshaft bearing retainer, draw the three screws tight, and rewire the heads of the screws with an 8" piece of $\frac{1}{16}$" wire. Place the key in the camshaft and press the camshaft gear onto the camshaft, making sure the tooth with the single punch mark engages the tooth space indicated by a dot on each of two adjacent teeth of the governor shaft pinion.

Replace the self-locking nut on the end of governor shaft and draw up to 40 to 45 ft.-lbs. torque with a tension wrench as shown in Figure 69. The pump flange, gear

hub, distributor unit, plunger unit, high-pressure pipe, fuel fittings, bottom cover, and the primary pump may now be assembled as described under those headings in the preceding chapters. Be sure to draw the camshaft self-locking nut to 70 to 85 ft.-lbs. torque with a tension wrench. The housing cover and the front cover need not be replaced until after the pump is properly adjusted.

ADJUSTMENT

The adjustment of the governor in the field is limited to the control rack, governor spring lever stop screws (high, idle speed and shut-off), and the torque spring arm stop screw. *The three adjusting screws in the torque control unit should not be touched at any time,* due to the fact that a complete dynamometer test, similar to that performed at the facory; is necessary.

The torque control lever stop (9), Figure 75, locates the torque spring arm and the governor spring lever so that during the maximum travel of either, they will not strike the pump housing. The stop screw (9) will usually be found in a central position. The torque spring shoe screw (8), Figure 75, increases or decreases the horsepower at the intermediate and low speed points on the torque curve of the engine. Clockwise turning of the screw increases the horsepower. The torque control lever pick-up or limiting screw (5), Figure 75, is used to limit the horsepower at the lowest speed point on the torque curve for the engine. It also acts as a pick-up so that the control lever on the outside of the pump is pushed forward, the governor spring unit moves forward with the torque spring arm (6). The set screw (5) bumps into the torque control lever (7) moving it forward. The torque control lever is keyed to the governor fork shaft and therefore moves the control rack toward the shut-off position. When the engine is pulled down to its lowest speed, clockwise turning of the pick-up screw reduces the horsepower.

Readjustment of the torque control lever stop (9), alters all five of the other possible adjustments of the pump. The adjustments of the pick-up screw (5) and the torque spring shoe screw (8) are very closely allied. When the screw (8) is set at the factory, the screw (5) is backed out. Then screw (5) is set after additional load reduces the speed to its lowest point on the engine's torque curve.

Assuming the three adjustments explained above have not been altered, disassembly and replacement of various parts in the pump will not alter the effect of the torque control unit in shaping the torque curve for the engine.

With the pump filled with lubricating oil to the upper drain cock, the adjustments on the pump can be made by cutting an extra pump side cover in half to make the torque spring arm stop screw accessible. A cover is cut like this to retain the oil in the pump. Be sure to put on a regular complete side cover after the adjustments are made. Removal of the oil filler neck allows the control rack and the governor spring arm stop screws to be adjusted.

1. Operate the engine and check the high idle speed. If this is too high, turn the stop screw out of the governor spring arm to get the speed desired.

2. If the speed is low, loosen the lock nut on the high idle speed stop screw and turn the stop screw into the governor spring arm until the correct speed is obtained with the stop against the housing. Hold back the governor control lever to do so. Be sure to lock the screw in the correct position.

3. If this adjustment does not give the high idle speed desired, remove the pump side cover to make sure the rear end of the governor spring assembly does not strike the housing. If this is the case, stop the engine, turn out the stop screw in the governor spring arm at least one turn to give some clearance between the rear end of the governor spring assembly and the pump housing. Now loosen the lock nut on the control rack and turn the adjusting rod one turn into the control rack. Start the engine, recheck fast idle, and if necessary, make

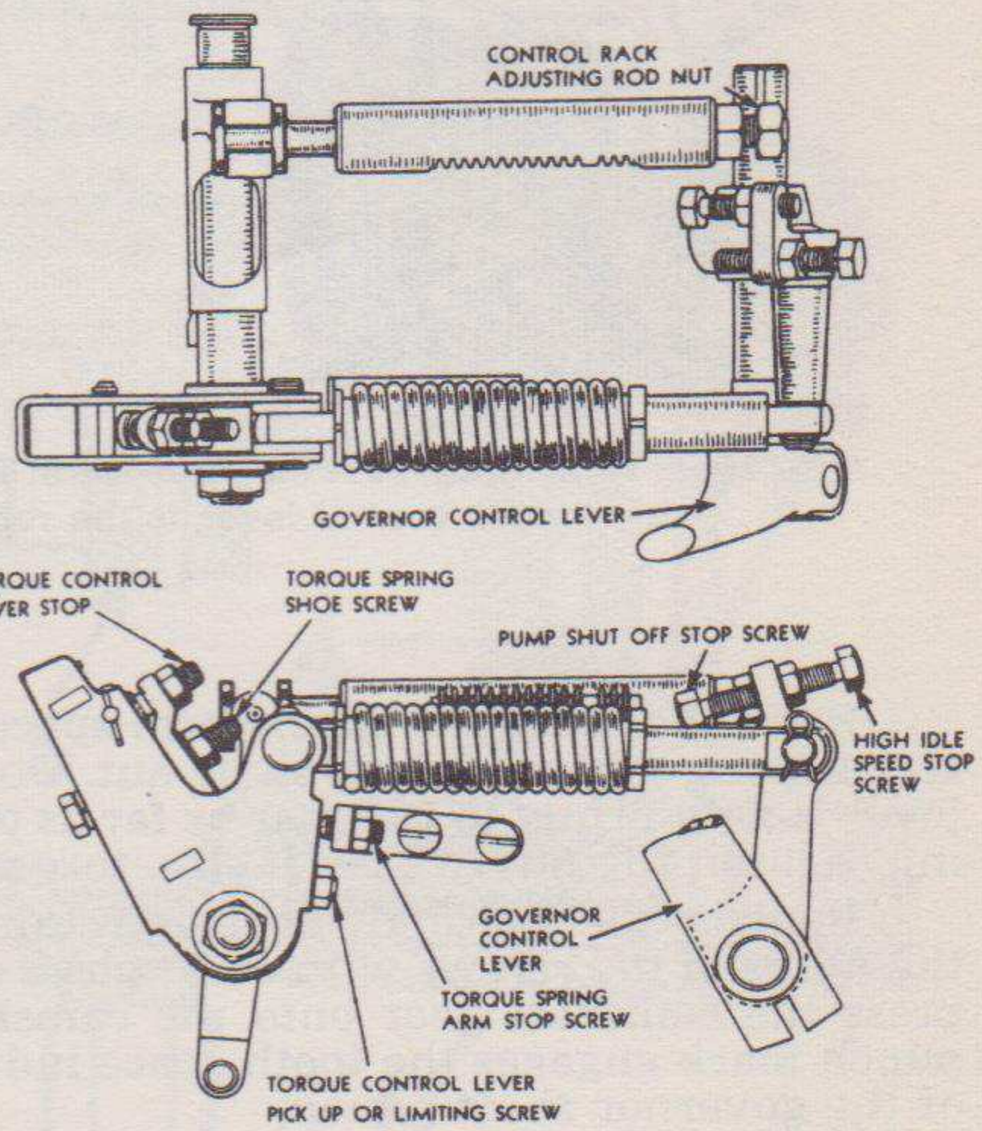

Fig. 101—Points where injection pump may be adjusted in the field.

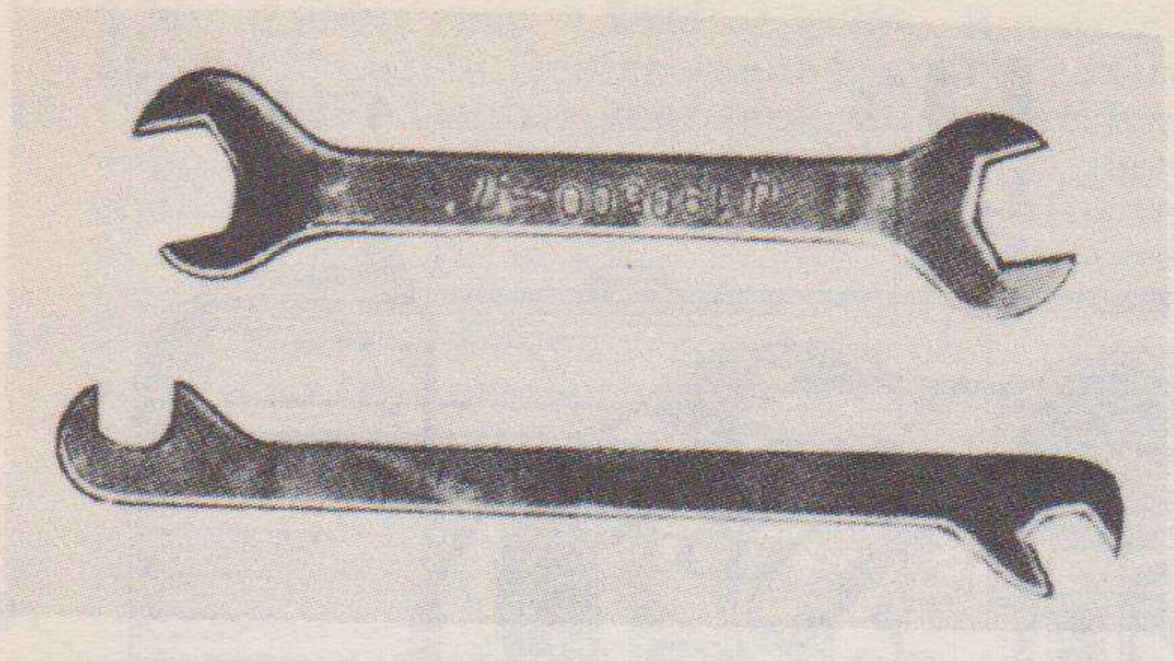

Fig. 102—Wrenches which simplify adjustment of control rack and governor spring lever stop screws.

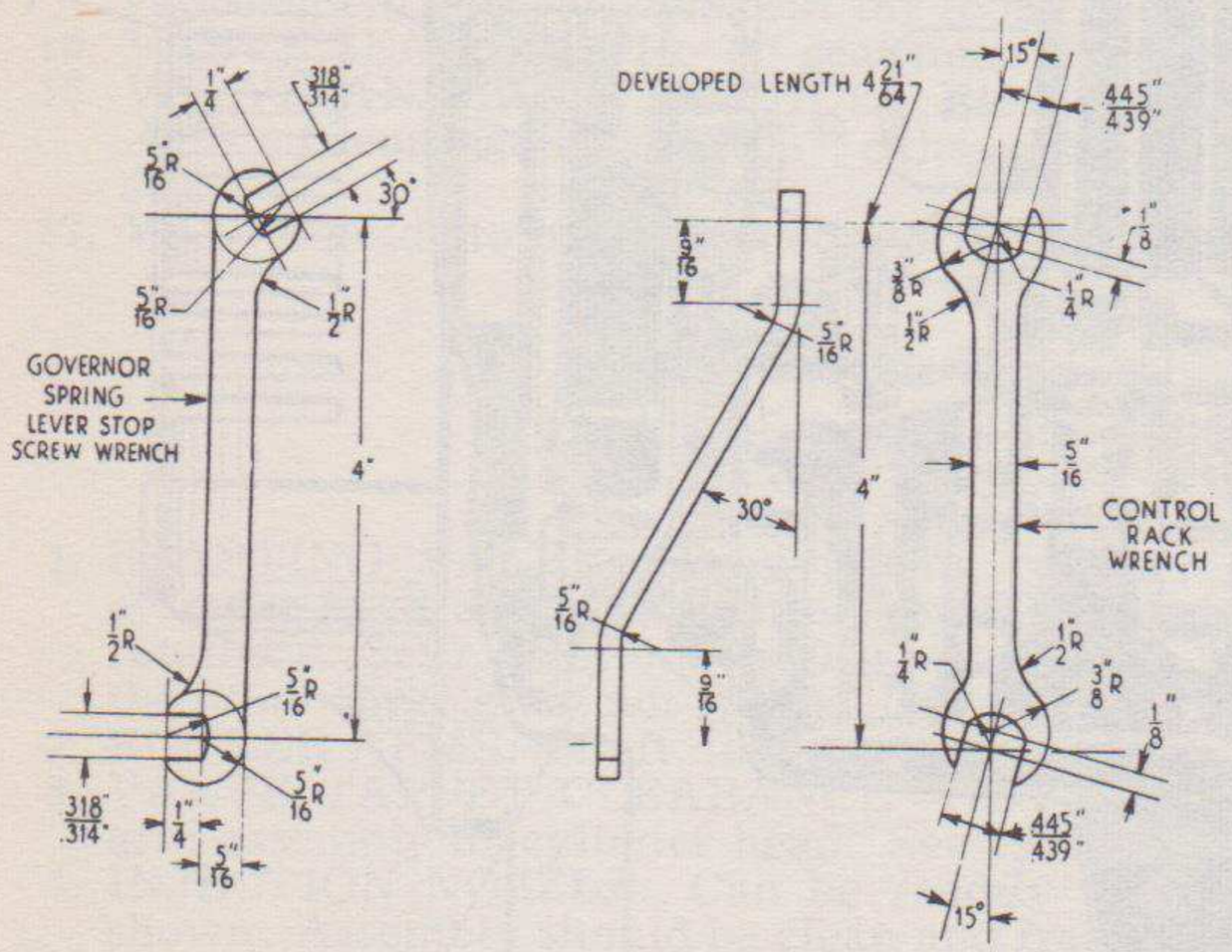

Fig. 103—Dimensions for making control rack and governor spring lever adjusting wrenches.

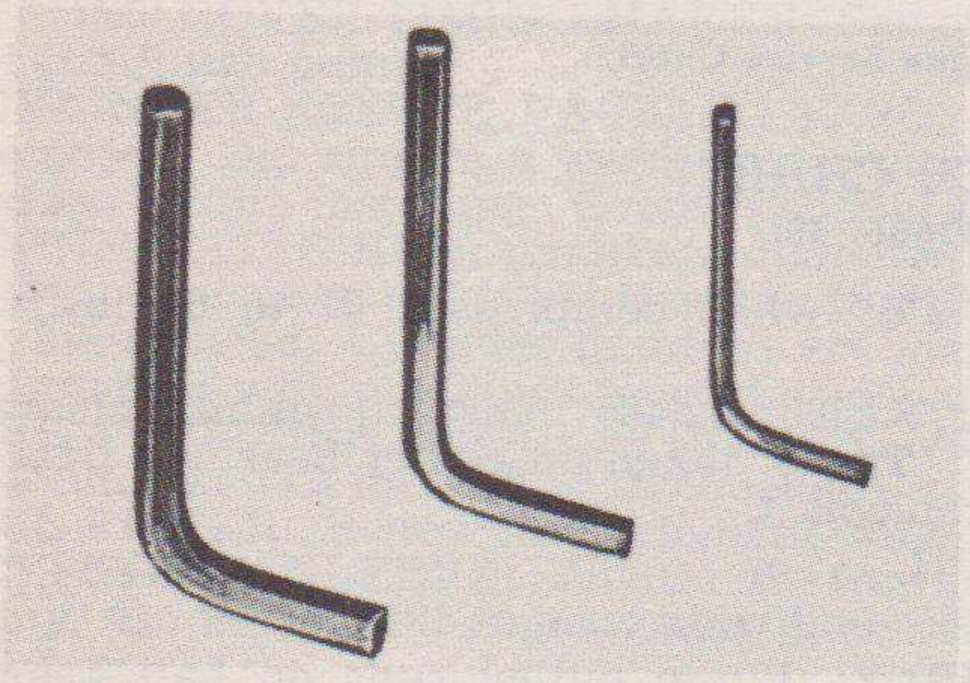

Fig. 104—Wrenches for removing socket-head capscrews in pump flange and pump housing side cover. Small wrench is used to turn adjusting screws of torque control.

additional settings of the control rack adjusting rod to give the fast idle desired.

In adjusting the control rack, use caution so that the adjusting rod is not turned into the control rack too far. If this is done, the governor cannot shut off fuel to the engine, and the engine will run away. It this occurs, stop the engine by converting to the gasoline cycle with the gasoline supply shut off. Recheck adjustments and if they are in order, return of such a pump to the factory is recommended.

4. After adjusting the high idle speed, place the engine under load. If the power appears low, turn out one turn the torque screw arm stop screw attached to the pump housing. If power seems too high, turn in the stop screw one turn.

5. Be sure to lock all screw adjustments after they are made. Make no attempt to alter the settings of the torque control. These have been accurately set at the factory, and replacement of a plunger unit does not change the engine characteristics.

6. Adjust shut-off stop screw so that the control lever moves a few degrees after the injection of fuel to the cylinders is shut off. Anytime the control rack is adjusted, the shut-off ability of the pump should be inspected.

7. Refer to section under the heading "Trouble Shooting".

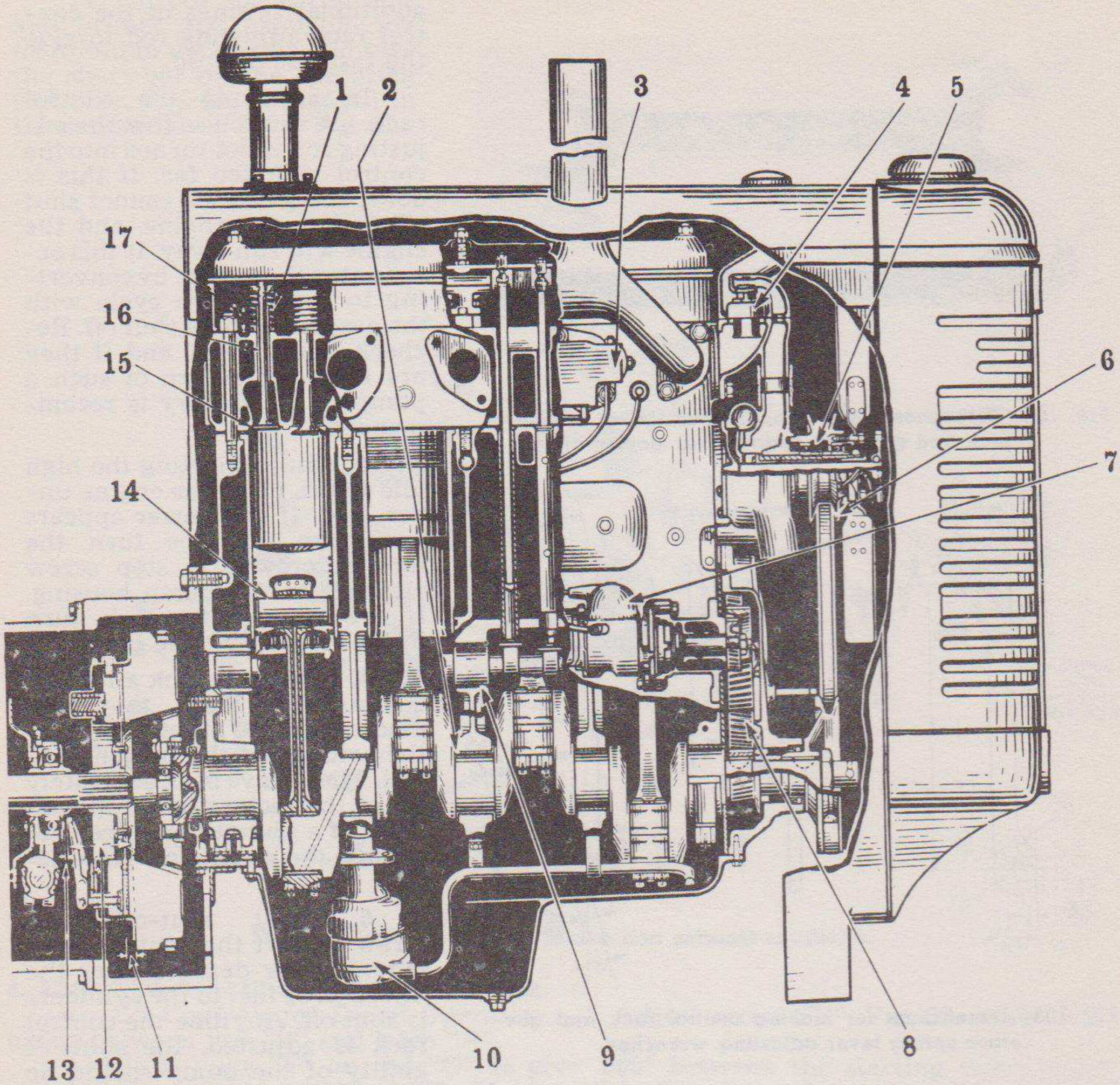

Fig. 46—Engine Service Chart.

SERVICE CHART

(See Figure 46)

1. VALVE SPRING: Should measure 2½" when compressed 62 to 68 lbs., free length $3\frac{1}{16}$".
2. MAIN BEARINGS: Journal diameter, 3.2480"-3.2485"; vertical running clearance .003"-.004"; end clearance, .008"-.012". Thrust taken on center bearing. Bearings can be replaced without removing crankshaft.
3. AUTOMATIC GROUNDING SWITCH.
4. THERMOSTAT: It is set to open at 165° and wide open at 190° F.
5. WATER PUMP AND FAN ASSEMBLY: Pump pulley runs on ball bearings mounted on sleeve over pump shaft. The pump drive floats on two bronze bushings and is packed with ample packing allowing for several adjustments of the packing nut before requiring replacement of the packing. Use water pump wrench No. 11858-DA to tighten packing nut. *Do not over-lubricate* the water pump shaft (capped fitting).
6. FAN BELT ADJUSTING FLANGE: See Operator's section for adjustment.
7. MAGNETO: International H-4 with automatic grounding switch in manifold.
8. TIMING GEARS: Gears are all punch marked and lettered to facilitate correct assembly. The marks on the gears are in line with 64 revolutions. See text for details.

9. CAMSHAFT BEARINGS: Bearing journal diameters; front, 2.618"-2.619"; center, 2.368"-2.369"; rear, 1.7485"-1.7475". Running clearance .0015"-.0035". End clearance .005"-.011". Replacement bearings available reamed to size.
10. OIL PUMP: Double-gear type, all driven from the same shaft. Main set of gears supplies oil to lubricating system. Auxiliary set of gears pumps oil from the shallow end of the oil pan, preventing oil-pressure failure when unit is operating at extreme angle of tilt. "Floato" oil screen prevents foreign bodies from entering pump and takes clean oil from top of sump.
11. PLACE straight edge across back plate of engine clutch, adjust compression capscrews so that pressure plate is exactly $1\frac{1}{64}$" from straight edge. Be sure pressure plate is equal distance over entire surface.
12. ADJUST release levers in engine clutch by turning release lever eyebolt sleeves to give $4\frac{1}{64}$" from end of lever to bottom side back plate.
13. ADJUST clutch linkage to give $\frac{3}{16}$" clearance between clutch-release levers and throw-out bearing.
14. PISTON PIN: Pin floats in rod and piston and is held in piston by retainer spring clips. The pin diameter is 1.6250"-1.6253"; clearance in connecting rod, .0003"-.0005"; clearance in piston is .0001"-.0003". A .005" oversize pin is available for replacement service. See text for tools.
15. VALVE SEAT WIDTH: $\frac{3}{32}$" seat must be .002" concentric with valve guide bore.
16. VALVE AND VALVE GUIDE: Valve stem diameter—intake .4325"; exhaust .4315". Clearance intake .003"; exhaust .004". Valve guides for repairs reamed to size.
17. VALVE guide to be assembled with sharp end 1⅜" above cylinder head.

SERVICE CHART

(See Figure 47)

1. STARTING VALVE: Screw spring retainer down to .240"-.250" from top of cylinder head and insert cotter key. Check clearances between cam rollers and retainers. Set closest one to .060" clearance. The maximum clearance on any of the other three must not exceed .080". See text for method of adjusting clearance.
2. ROCKER ARMS: Shaft diameter .9960"-9965". Running clearance .0015"-.002".
3. VALVE TAPPET CLEARANCE—HOT .018". Recheck after tightening rocker arm assembly or cylinder head. See text for method.
4. INJECTION NOZZLE: Can be readily removed by taking out two capscrews shown. Assembly should be clean and free from carbon. For cleaning and testing, see text.
5. PISTON: A-132, aluminum alloy, a select fit with sleeve to give .0085"-.0095" measured clearance using ½" wide ribbon gauge. See text for details.
6. DIESEL FUEL FILTER: For service see operator's section.
7. FRONT COVER TIMING MARKS: See operator's section for timing and removal of the Bosch pump.
8. CYLINDER SLEEVE PACKING RING: Renew ring whenever a sleeve is assembled. Dip ring in a warm soap solution to which a little glycerine has been added, before installing. Grooves should be clean.
9. CONNECTING ROD: Crankpin diameter 3.2480"-3.2485"; vertical clearance .003"-.004". The assembly is replaceable from the bottom of engine without removing cylinder head. Cylinder numbers are marked on rod and cap and should be reassembled with markings toward camshaft of engine.
10. OIL PRESSURE REGULATING VALVE: Set for 60-70 lbs. pressure. Spring should test 38.2 lbs. at $2\frac{3}{32}$"; free length is $3\frac{39}{64}$".
11. OIL FILTER: Renew filter element when changing engine lubricating oil.
12. CYLINDER SLEEVE: Should fit free in crankcase before installing packing ring. Do not interchange pistons in the sleeves when installing new sleeves and pistons.
13. PISTON RINGS: When installing new rings on used piston, break outside upper edge of the top piston ring with a file. Fit rings to smallest section of sleeve. Ring gap .010"-.020". Ring grooves should be clean and free from carbon, and oil holes in oil control grooves drilled out. Stagger ring gaps around piston. See text for ring clearances.
14. SPARK PLUGS: Gap should be set .035"-.040"
15. CARBURETOR; 16. PASSAGE FROM CARBURETOR; 17. BUTTERFLY TRIP YOKE; 18. AIR FROM AIR CLEANER: When engine is set on the gasoline starting cycle, air from the air cleaner passes through the carburetor into the passage from the carburetor to the cylinders. Butterfly valve trip yoke is shown in Diesel position; air passes directly to the cylinders.

SERVICE CHART

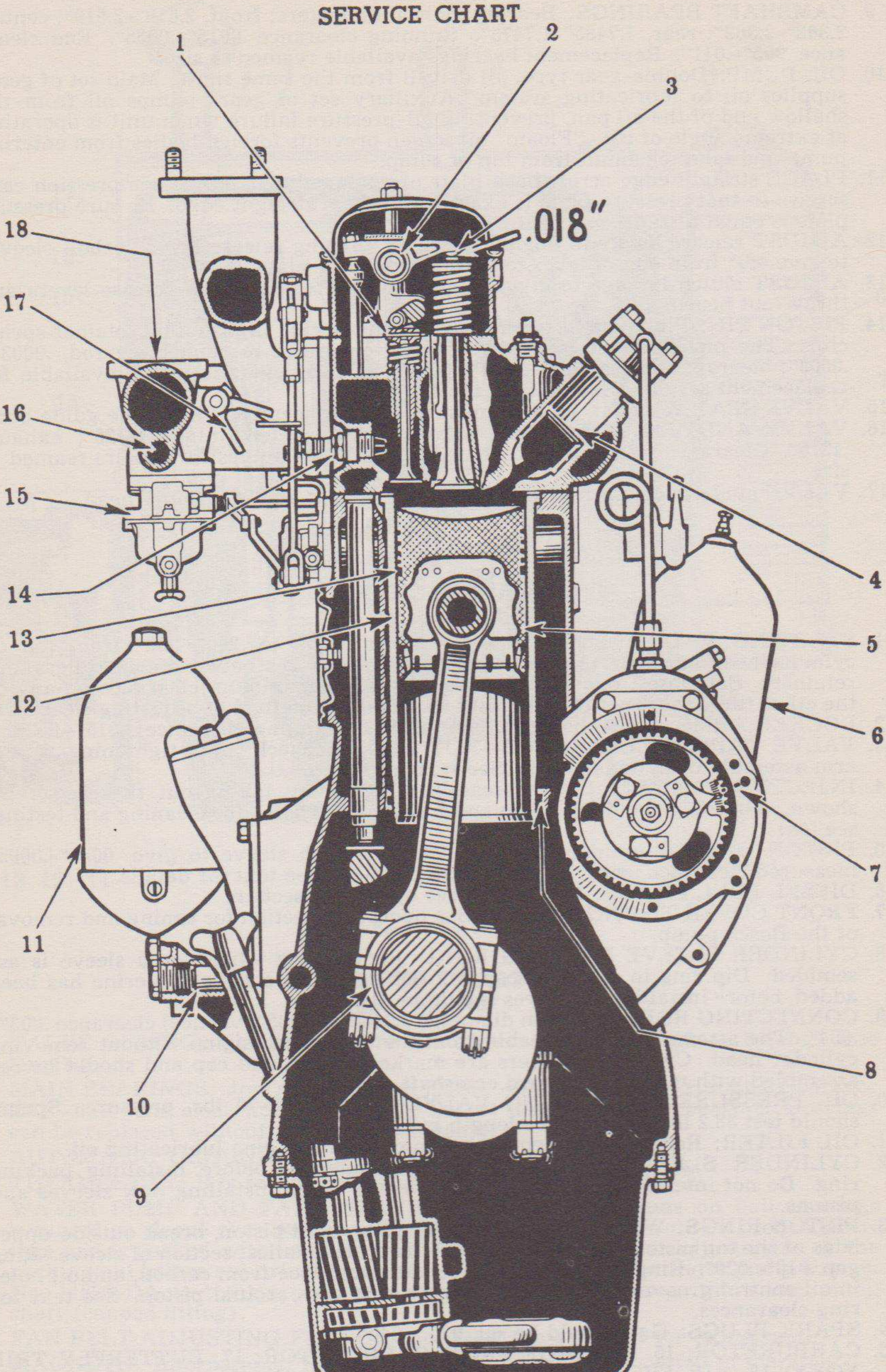

Fig. 47—Engine Service Chart.

†Armature Bearing Race Puller.....SE-839
*Outer Bearing Race Puller.....SE-1020
*Impulse Coupling Puller.....SE-812
*Magneto Bearing Race Replacer Tool.....SE-1021

CONNECTING ROD BUSHING AND PISTON PIN-BORE REAMER

°Reamer Body.....SE-949
°Reamer Blades.....SE-945-5
°Reamer Hones.....SE-949-10
°Pilot.....SE-949-15
*Cylinder Sleeve Puller.....SE-654

VALVE SEAT REAMERS

Valve Seat—Intake
†45° Valve Seat Reamer, Finishing.....SE-1235
†45° Valve Seat Reamer, Roughing.....SE-1223
†75° Valve Seat Reamer, Roughing.....SE-1225
†15° Valve Seat Reamer, Roughing.....SE-1227
†Valve Seat Reamer Pilot.....SE-903

Valve Seat—Exhaust
†45° Valve Seat Reamer, Finishing.....SE-1236
*45° Valve Seat Reamer, Roughing.....SE-691-1
†75° Valve Seat Reamer, Roughing.....SE-1225
*15° Valve Seat Reamer, Roughing.....SE-691-2

VALVE GUIDES

**Cleaner.....SE-1202-3
*Reamer.....SE-640

VALVE LEVER BUSHING

°Expansion Reamer Body.....SE-945
°Expansion Reamer Blades.....SE-8735
°Expansion Reamer Pilot Bushing.....SE-8771

NOZZLE TESTING EQUIPMENT

*Hydraulic Test Pump.....SE-905-A

PISTON RINGS

†Piston Inserting Ring Compressor.....SE-1041
ΔPiston Ring Expanding Tool.....SE-1115

NUT AND BOLT TENSION

††Tension Wrench 0-100 ft. lb.....SE-1137
††Extension for SE-1137, 70-175 ft. lb.....SE-1137-1
††Snap-On Ratchet for SE-1137.....SE-1186

ENGINE CLUTCH PILOT BEARING

*Puller.....SE-672

I.H.C. SINGLE PLUNGER INJECTION PUMP

*Scavenging Valve Body Puller.....SE-1330-1
*Scavenging Valve Tappet Guide Removing Tool.....SE-1330-6
*Plunger Spring Compressing Tool.....SE-1330-7
*Plunger Bushing Clamp and Discharge Fitting Wrench.....SE-1330-8
*Leakage Test Adapter.....SE-1330-9
*Mounting Block for holding pump housing when inverted.....SE-1330-10
*Governor Weights Carrier Removal Holding Plate.....SE-1330-11
*Governor Shaft Eccentric Holding Fixture.....SE-1330-12
*Governor Fork Shaft Needle Bearing Assembly Tool.....SE-1330-13
*Governor Spring Lever Stop Wrench.....SE-1330-14
*Governor Torque Control Lock Nut Box Wrench.....SE-1330-15
*Control Rack Adjusting Rod Nut.....SE-1330-16
*No. 10 Socket Set Screw Wrench ($\frac{3}{32}$" across flats).....SE-1330-17
*¼" Socket Head Capscrew Wrench ($\frac{3}{16}$" across flats).....SE-1330-18
*$\frac{5}{16}$" Socket Head Capscrew Wrench ($\frac{7}{32}$" across flats).....SE-1330-19

*International Harvester Co., 180 No. Michigan Ave., Chicago, Ill.
‡Wallace Mfg. Co., 124 First Ave. No., Minneapolis, Minn.
†Hinckley-Myers Co., Jackson, Mich.
°Scully Steel Products Co., 1319 Wabansia Ave., Chicago, Ill.
**Ruggles & Ruggles, Batavia, Ill.
††Aeroparts Corp., Batavia, Ill.
ΔSealed Power Corp., Muskegon, Mich.

INDEX

1. OPERATION 136
2. STARTING MECHANISM 136
3. INTAKE MANIFOLD 138
4. ADJUSTING STARTING VALVE MECHANISM 139
5. STARTING CARBURETOR 141

STARTING SYSTEM

1. OPERATION

The engine is temporarily converted to a gasoline engine during the starting process. After the engine is operated on gasoline for about a minute, the starting mechanism is manually released and the engine will operate on Diesel fuel as a full Diesel engine. Figure 48 shows the 45° head engine starting mechanism. Both engine and starting mechanism are in the gasoline operating position. To start the engine, the operator pulls down the speed control lever all the way. This shuts off all the fuel supply to the nozzles from the fuel injection pump. Next, the compression release lever is pulled back until jaw "B" locks behind latch "A".

This operation accomplishes four things:

a.—It opens four starting valves (1), thereby enlarging combustion chamber (2) by space "3" and exposing spark plug (4). The enlarged volume reduces the compression ratio to that of a conventional gasoline engine or 6.4 to 1.

b.—It closes butterfly valves (5) in the air intake manifold, closing the Diesel air passage from the air cleaner to cylinder intake parts. The solid arrows show the path the air must take. It passes down through the carburetor and then through small high velocity passages to intake ports (6). Spark plugs ignite the air-gasoline mixture which is compressed by piston into low-compression chamber (3).

c.—It connects magneto electrical circuit by opening the magneto grounding switch (7, inset) in the front end of intake manifold.

d.—It releases the shut-off valve (4), Fig. 53, in the carburetor fuel bowl by turning cam (2), allowing the needle to be actuated by the float (5).

The operator then starts the engine with the aid of the electric starter. After the engine has operated about a minute the compression release lever is pushed all the way forward. The engine speed control lever is raised to the operating position at the same time, and the engine runs as a full Diesel.

Raising compression release lever depresses latch "A", Fig. 48. The spring attached to jaw "B" pulls it around, pulling down rod "G" and opening butterfly valves (5). Rod "G" also closes starting valves. The carburetor needle valve is locked on its seat and the magneto grounding switch (7) is closed. The engine operates on the Diesel cycle while the carburetor, magneto, spark plugs and low-compression chambers are all inactive. The broken line arrows indicate the air path for Diesel operation.

2. STARTING MECHANISM

a.—Disassembly.—(1) Remove the intake manifold.

(2) Disconnect the control rod from the lever (1), Fig. 49.

(3) Disconnect the shaft (12) by removing the pin (9).

(4) Unhook the return spring (6) and the spring (15) and remove.

(5) Remove the pin (2) from the operating lever (1) and pull the lever off the shaft (5).

(6) Remove the key and the washer (carburetor side) from the shaft (5) and remove the jaw (8).

(7) The shaft (5) can now be pulled from the crankcase with the jaw lever (7).

(8) The jaw lever then can be removed from the shaft (5) by removing the pin (16).

(9) Remove the latch (19) by unscrewing the latch pin (20).

(10) Remove the latch bracket (17) by removing the nut from the stud holding the bracket to the crankcase.

b.—Reassembly.—(1) Place the latch bracket on the stud and replace the nut. (Do not tighten).

(2) Replace the latch (19) and screw the latch pin (20) into the head. Tighten the stud nut and latch pin.

(3) Place the jaw lever (7) on the cross shaft (5) assembling it to the side that has cotter key hole. Replace the pin (16) in the lever (7) and tighten.

(4) Place the cross shaft in the crankcase and assemble the lever (1).

(5) Place the jaw (8) on the cross shaft. Replace the washer and cotter key.

(6) Replace the springs (15) and (6).

(7) Connect the shaft (12) to the jaw (8) by replacing the pin (9) and cotter key.

(8) Adjust the starting mechanism as outlined.

(9) Replace the intake manifold.

990620 O—52——14

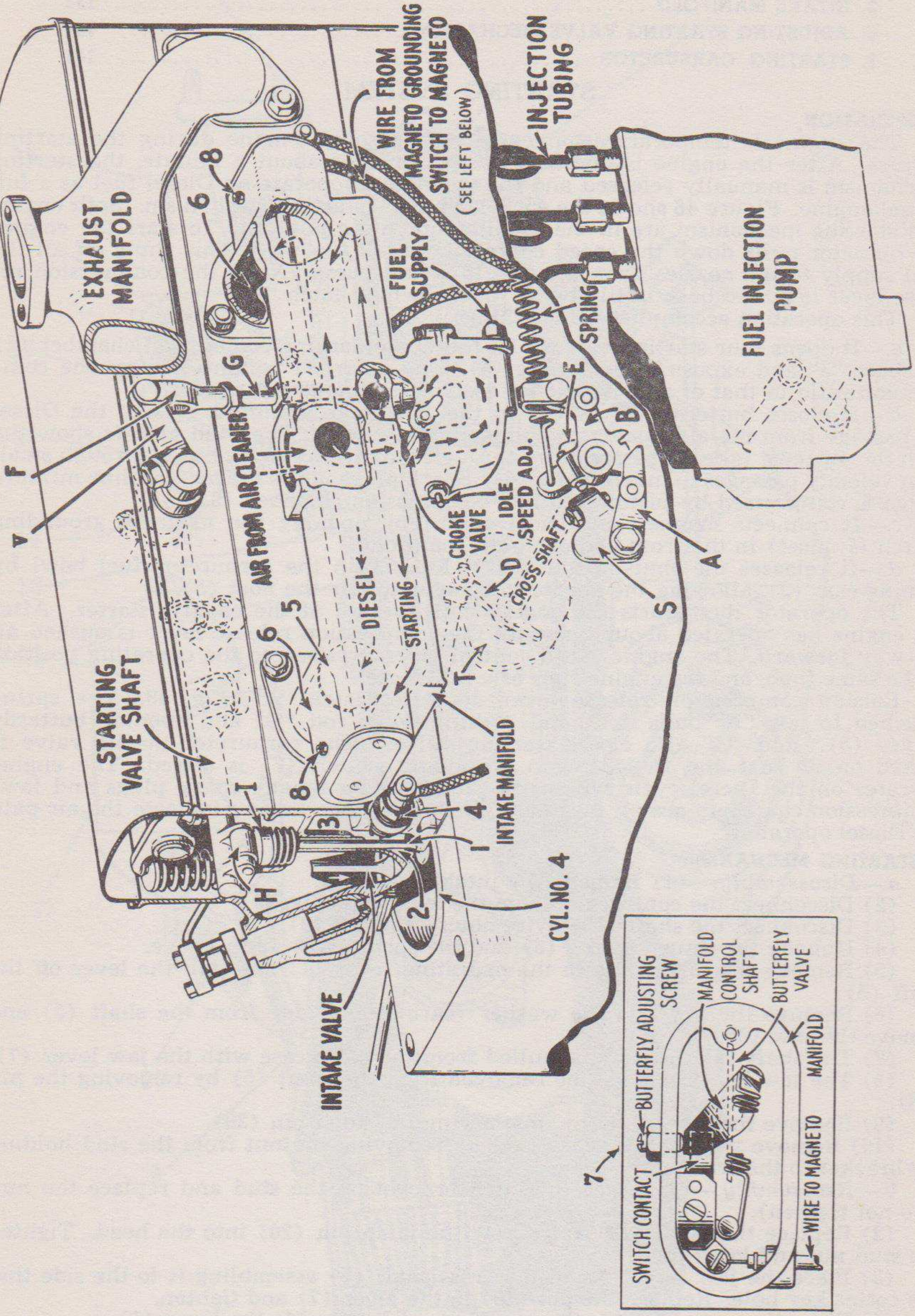

Fig. 48—Starting system.

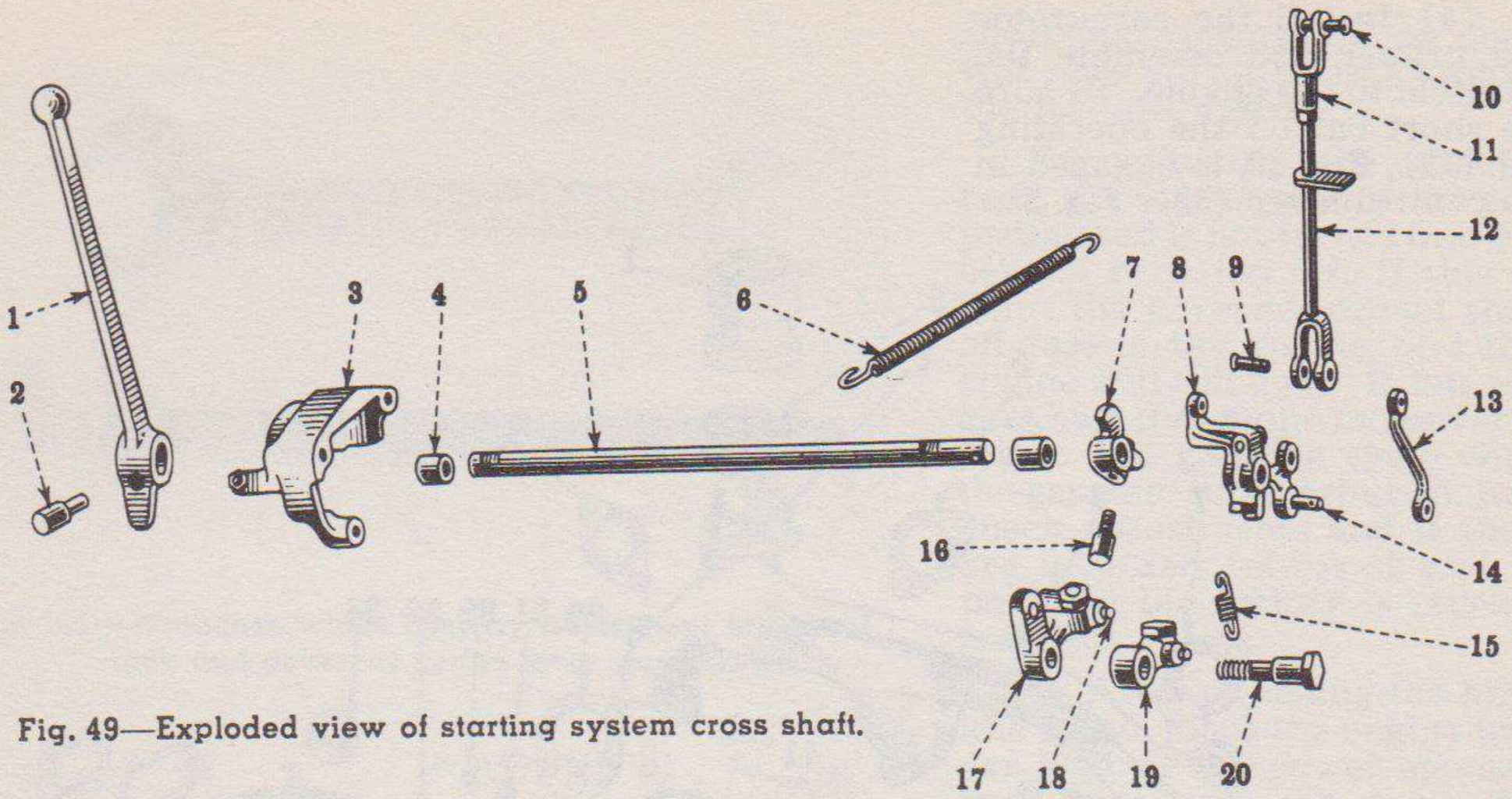

Fig. 49—Exploded view of starting system cross shaft.

3. INTAKE MANIFOLD

a.—Disassembly.—(1) Remove the intake manifold from the engine.

(2) Remove the carburetor and primer from the manifold.

(3) Remove the end cover (12), Fig. 51.

(4) Disconnect the springs (14) and remove.

(5) Remove the nut from the lever pin (24) and the lever pin from the control lever (32).

(6) Remove the screws holding the butterfly valves (9) and (34), and remove the valves.

(7) Remove the control shafts (10) and (33).

(8) Remove the seals (11).

b.—Reassembly.—(1) Assemble new seals (11) in the manifold. Install the seals, with the edge toward the outside. When assembling the control shafts, be careful not to damage the seals.

(2) Reassemble the starting mechanism in the manifold by reversing the procedure used in disassembling. Be sure the control lever (32) is placed on the front control shaft (33) when reassembling.

(3) Loosen the lock nuts on top of the manifold at each end and adjust the set screws until the butterfly valves (9) and (34) are horizontal when in the Diesel position. This is necessary to assure the maximum amount of air entering the cylinders when operating on the Diesel cycle.

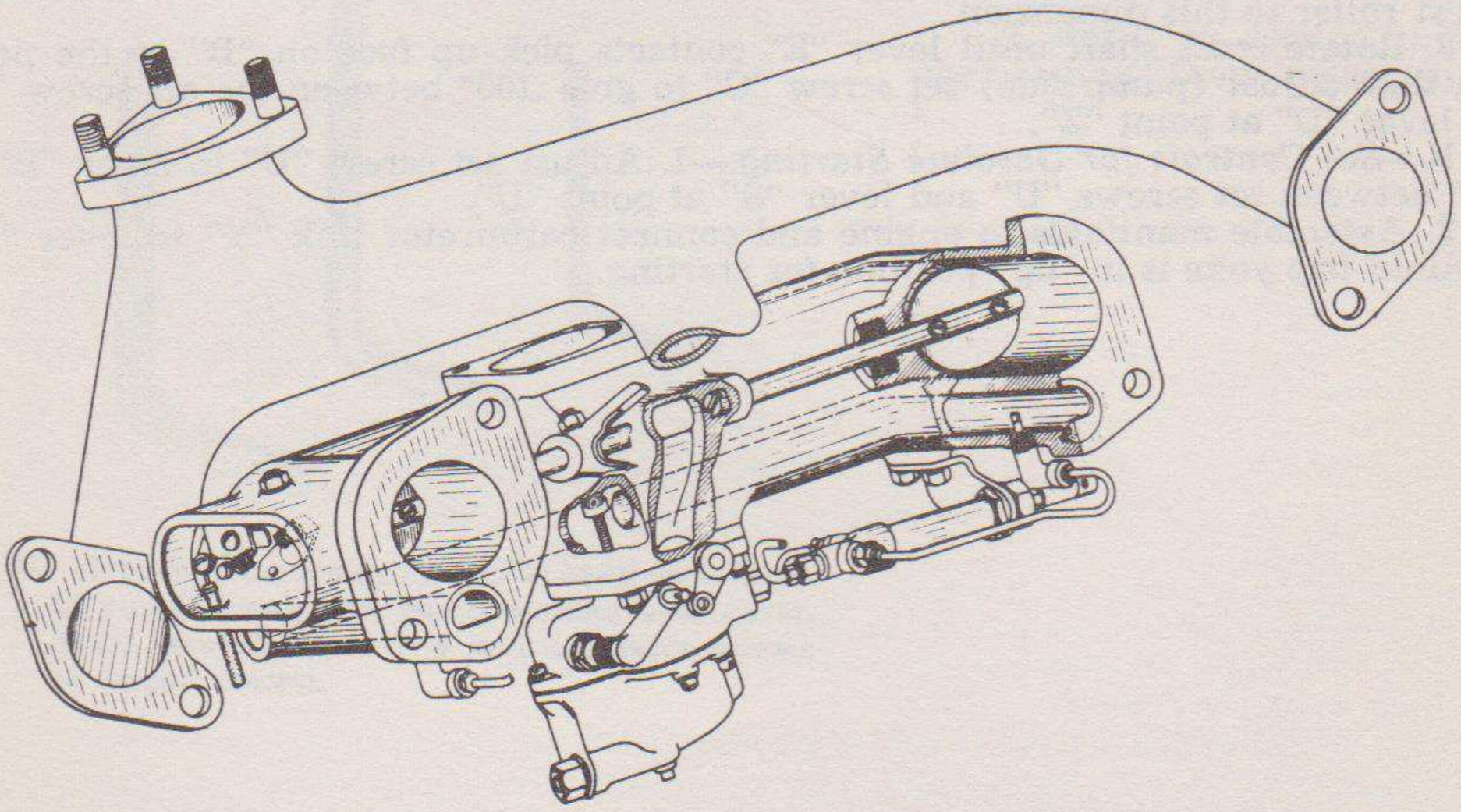

Fig. 50—Cross section of the intake manifold. Butterfly valves are shown in the gasoline starting position.

(4) Install the carburetor and primer and assemble the manifold to the engine. Be sure the short bar on the operating rod (12), Fig. 49, is engaged in the control lever (32), Fig. 51.

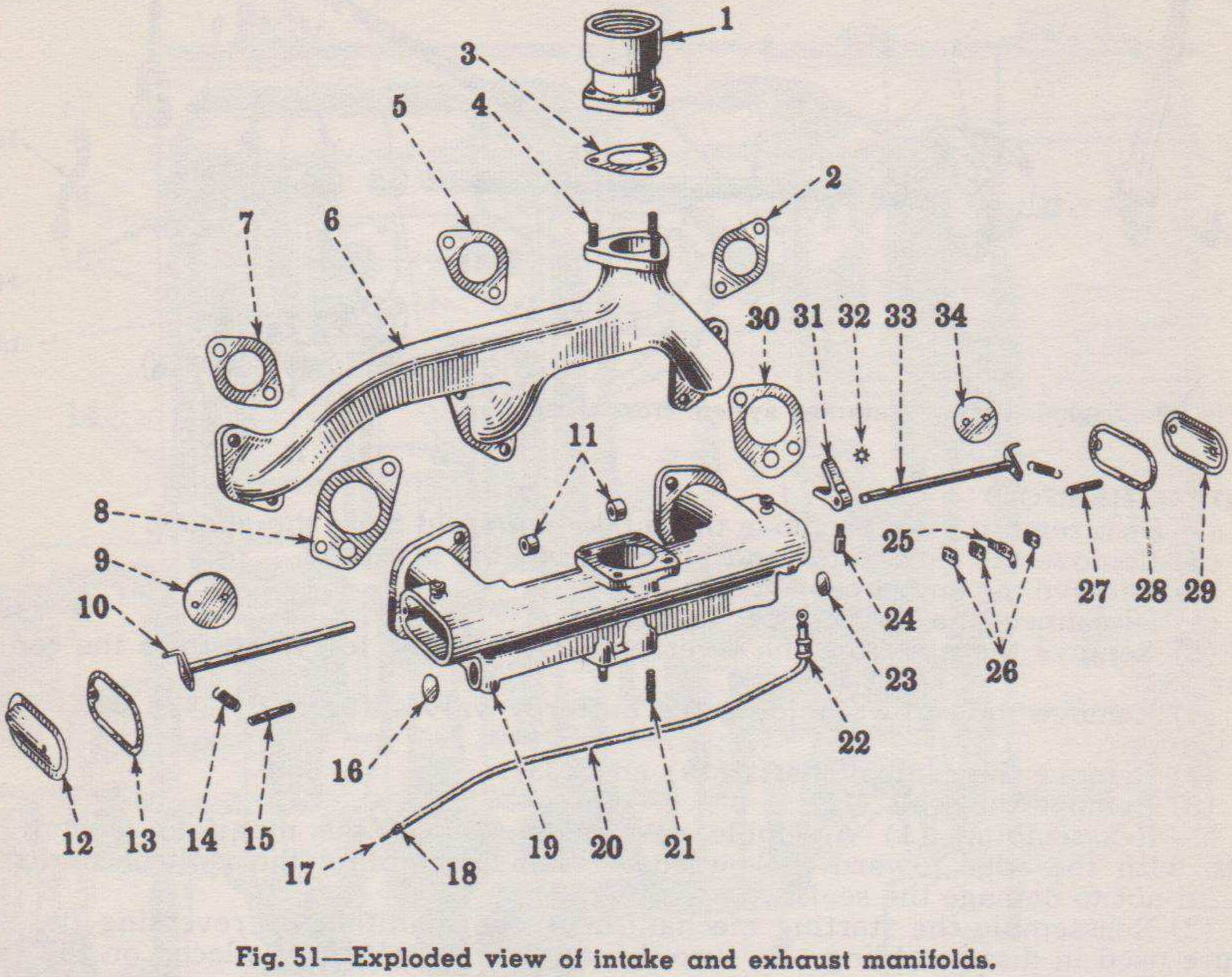

Fig. 51—Exploded view of intake and exhaust manifolds.

4. ADJUSTING STARTING VALVE MECHANISM

a.—Set Controls for Diesel Operation.—1. Adjust screw 'R", Fig. 52, until .060" exists between jaw "B" and latch "A".

2. Adjust yoke "F" on rod "G" to give .060" between the starting valve shaft roller "H" and spring retainer "I". Measure this distance under each roller. Adjust closest roller to this dimension.

3. Rotate cross shaft until lever "E" contacts pick-up face on "B" at the point "X", then adjust (pump side) set screw "C" to give .100" between the set screw "C" and lever "D" at point "Z".

b.—Set Controls for Gasoline Starting.—1. Adjust set screw "U" in lever "B" to .030" between set screws "U" and lever "S" at point "U".

2. Assemble manifolds to engine and connect carburetor link "Y" to lever "B". Manifold trip yoke is in "up" position for starting.

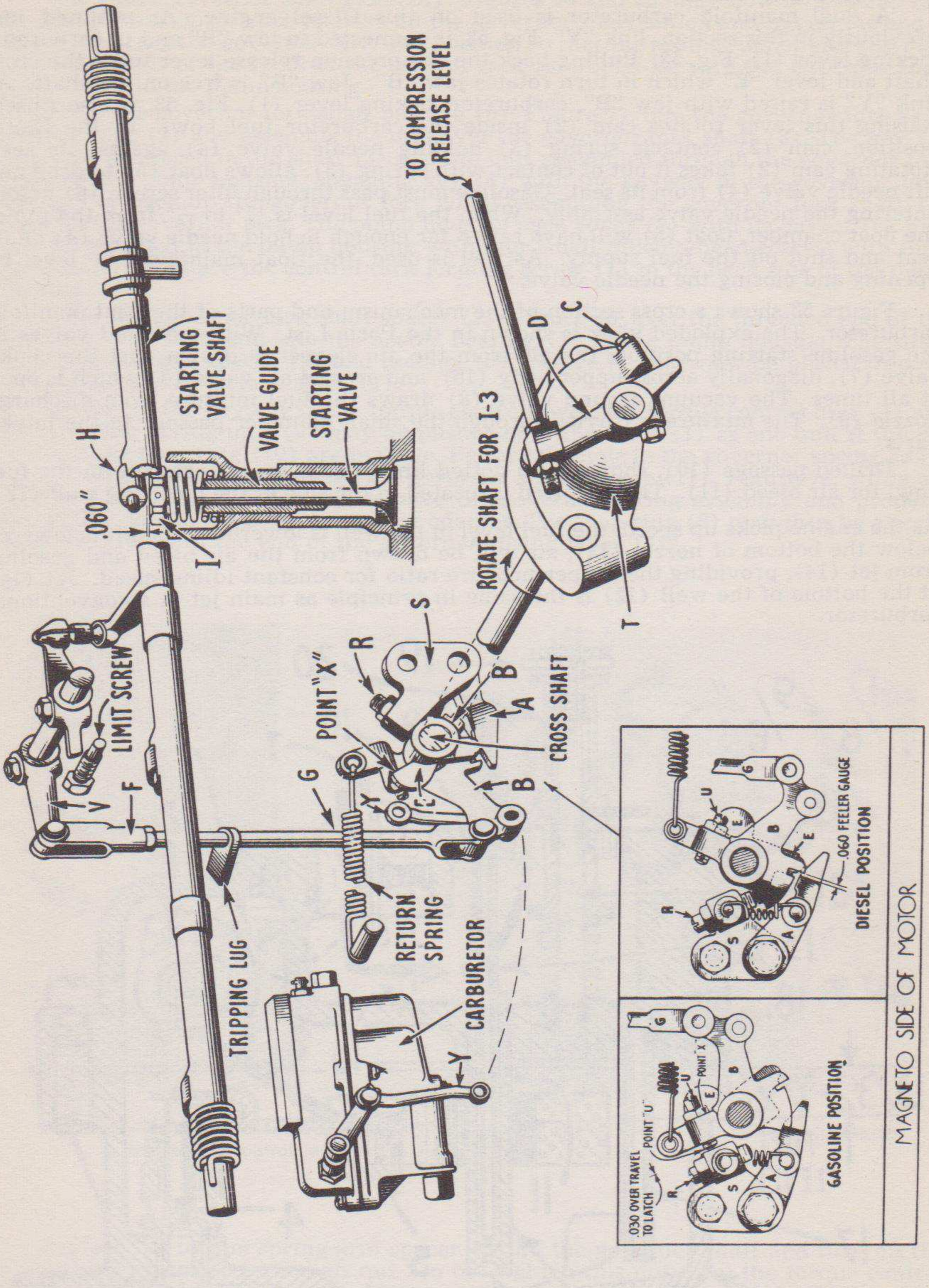

Fig. 52—Starting control mechanism.

5. STARTING CARBURETOR

A dual manifold carburetor is used on this Diesel engine. As outlined just previously in this section, link "Y", Fig. 52, is connected to jaw "B" and to carburetor locking lever (1), Fig. 53. Pulling back the compression release lever turns the cross shaft and lever "E" which in turn rotates jaw "B". Jaw "B" is free on the shaft. As link "Y" is raised with jaw "B", carburetor locking lever (1), Fig. 53, is also raised. Raising this lever rotates cam (2) inside the carburetor fuel bowl. In the Diesel position, cam (2) contacts spring (3) holding needle valve (4) against its seat. Rotating cam (2) takes it out of contact with spring (3), allows float (5) to drop and lift needle valve (4) from its seat. Gasoline must pass through filter screen (6) before entering the needle valve assembly. When the fuel level is $\frac{13}{32}$" to $\frac{7}{16}$" from the top of the float chamber, float (5) will have raised far enough to hold needle valve (4) on its seat and shut off the fuel supply. As fuel is used, the float maintains the level by opening and closing the needle valve.

Figure 53 shows a cross section of the mechanism and parts of the dual manifold carburetor. The exploded view is shown in the Parts List. With manifold valves in the gasoline starting position, the air from the air cleaner is drawn past the choke valve (7), diagonally across upper body (15), and around air valve (8) which is open at all times. The vacuum around valve (8) draws the fuel mixture from discharge nozzle (9). The mixture is carried through the small diameter passage to the intake parts.

Drilled passage (10), shown with dotted lines, equalizes air pressure in the fuel bowl for air bleed (11). The air bleed is located in the side of the metering well (12).

As the engine picks up speed, the fuel level in the well is lowered. When it is lowered below the bottom of nozzle (13), air will be drawn from the air bleed and gasoline from jet (14), providing the proper mixture ratio for constant idling speed. Jet (14) at the bottom of the well (12) is the same in principle as main jet in a conventional carburetor.

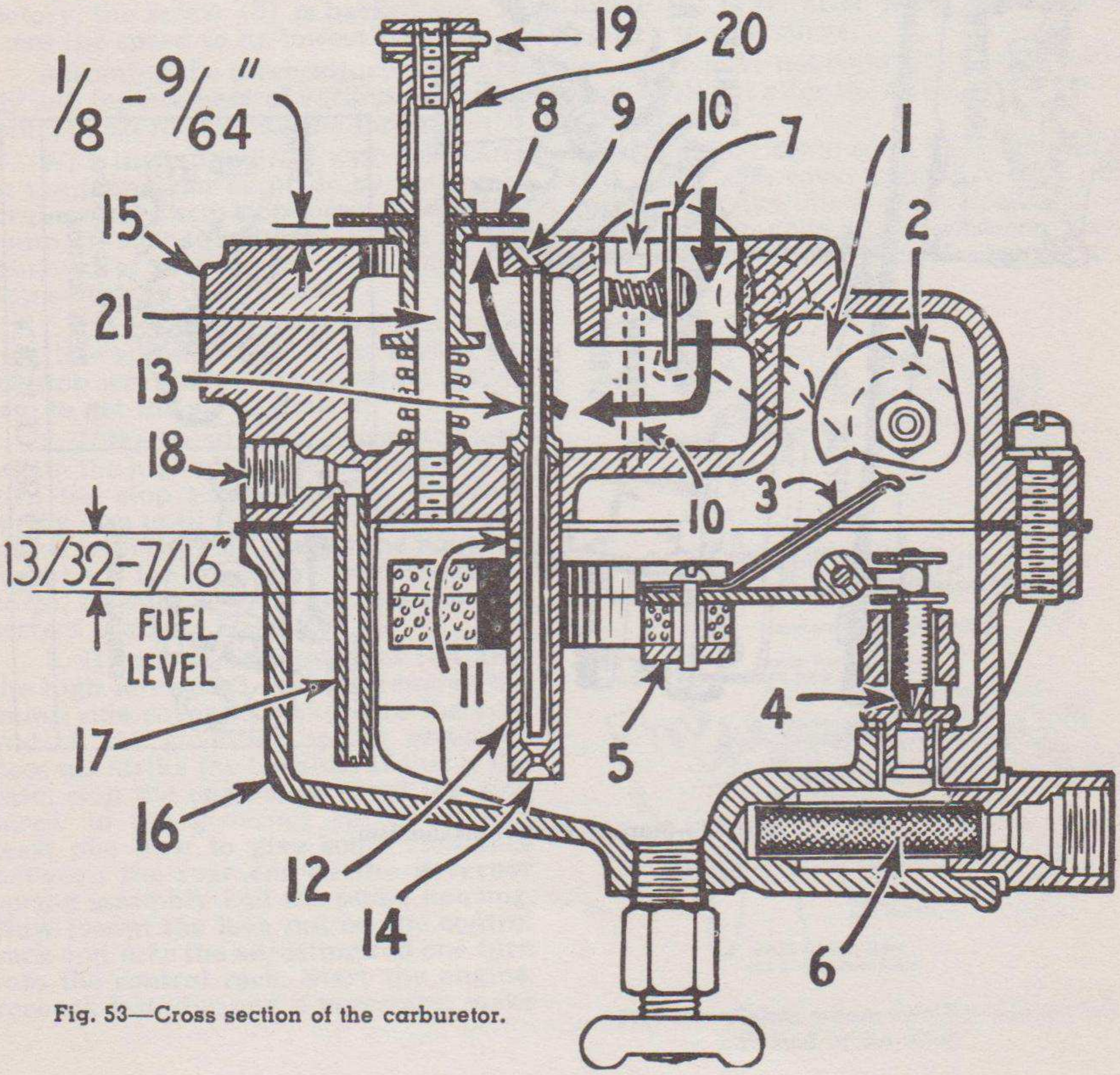

Fig. 53—Cross section of the carburetor.

When removing the carburetor, remove link "Y", Fig. 52, from the float locking lever (1), Fig. 53, dash choke control from choke lever, clip from drip hole tube, gasoline supply line, and four nuts from manifold studs. Carburetor body (15) and fuel bowl (16) assemblies may be separated by removing five fillister-head screws. Use a good gasket; it normally extends $\frac{1}{32}$" beyond bowl and body.

The fuel bowl assembly consists of the float assembly and fuel strainer. The fuel strainer is easily removed. Spring (3) on float (5) is normally ¼" to $\frac{5}{16}$" above the surface of the bowl. The fuel level is normally $\frac{13}{32}$" to $\frac{7}{16}$" below the top of the bowl; float is $\frac{9}{32}$" with the float loose and needle valve held firmly on its seat. The float can be removed by applying a screwdriver to the float pivot screw on the outside of the bowl. A pivot pin is pressed in the pivot screw and extends $1\frac{7}{32}$" from the head of the screw. The pivot pin should be straight to avoid binding the float. A spacer for piloting the other end of the pin is pressed in the fuel bowl. With the float removed the needle valve may be withdrawn for inspection. If worn, replace both the valve and seat; they are furnished in pairs only as service parts. Needle valve cage hexagonal shape is $\frac{7}{16}$" across flats. Thickness of gasket below the cage may be varied to change the fuel level. If the tang on the float is bent to change the level, remove the float from the pivot pin first to avoid bending the pivot pin.

As a solvent, use a solution of one part alcohol and one part benzine or a pure solution of acetone. Use either solution to dissolve all gums accumulating on carburetor parts. Blow off parts with clean dry air and reassemble as indicated in the foregoing. Do not run wires through needle valve cage.

The drop hole filler is accessible after removing the drip tube and adapter. The packing should be replaced if it has disintegrated to prevent entrance of dirt.

The supply for the primer extends down into the fuel bowl and may be easily unscrewed from body (15) for cleaning. A slot in the end of the tube is .028" to .040". The primer can be attached to the tapped hole adjacent to the drip tube.

The metering well (12) and nozzle (13) assembly is easily removed for cleaning by applying a thin screwdriver to the .045" to .059" slot in the bottom end. When replacing, after cleaning, be sure the upper end of nozzle (13) enters the hole in the top surface of body (15). Use only a solvent and air to clean these parts. The opening "9" should be clean.

The air valve (8) should be ⅛" to $\frac{9}{64}$" open at all times. Remove cotter key (19) at the top of the air-valve collar (20) and rotate the collar to give the proper opening. The spring at the bottom of the air valve maintains the valve in the open position. Be sure the air valve is square with the bore and an equal distance from the top surface of the body all the way around. The valve may be pushed down against body (15) to check the above. Guide (21) should be square with the top surface of the body. If the guide is replaced, the top end should be 1¼" above the surface of the body (15). On the bottom surface of the body, stake the guide to prevent its turning. Free length of spring is $\frac{9}{16}$" and tests 3 lbs. at ⅜".

Choke valve (7) is equipped with spring-loaded air valve to prevent excessive choking. The air valve should open freely. The choke may be removed by taking the two screws in the valve and drawing the shafts from each side. The body is not equipped with bushings for the shafts. Dust seals and retainers are located on each side and should be replaced if not in good condition. Soak the seals in oil before assembling. When replacing the valve, locate it in slots in ends of the shafts and center it in the opening in the body before drawing up the two screws. The countersunk side of the shafts faces the heads of the screws; upset the ends of the screws.

The float locking lever (1) connected to link "Y" etc., may be removed after taking the nut off the inside end of the shaft, slipping off the cam and pulling out the shaft, spring, retainer, and two dust washers. If the bearing is worn it may be replaced by unscrewing from the body. It is furnished reamed to size as a service part. When replacing the assembly, have lever (1) pointing toward air valve (8); flat sides of shaft are then vertical. Cam is then assembled with large rounded side toward the top of the body as shown in Fig. 53. Replace the nut on end of shaft and draw up tight.

RECOMMENDED TOOL EQUIPMENT

The following or similar items of tool equipment are recommended for servicing the International UD-14 engine described in this manual. These tools are available through the sources indicated.

MAGNETO

*Electrical Test Set.....SE-846
‡Neon Condenser Tester.....SE-1064

INDEX

GENERATOR 1
BATTERY 14
STARTING MOTOR 10

GENERATORS

(Fig. 1)

In order that normal service may be obtained from the generator with a minimum of trouble, a regular inspection and maintenance procedure should be followed. Periodic lubrication, inspection of the brushes and commutator, and checking of the brush spring tension as outlined in this bulletin, will insure normal operation and life to all parts.

The external circuit must be kept in good condition. Defective wiring, loose or corroded connections at the battery, cranking motor, ammeter and elsewhere in the circuit must be checked and eliminated when found. Loose or corroded connections in the charging circuit will cause high voltage which would result in injury to the generator and regulator, as well as short battery, light bulb, and distributor point life. Poor connections in the field circuit will cause a low generator output.

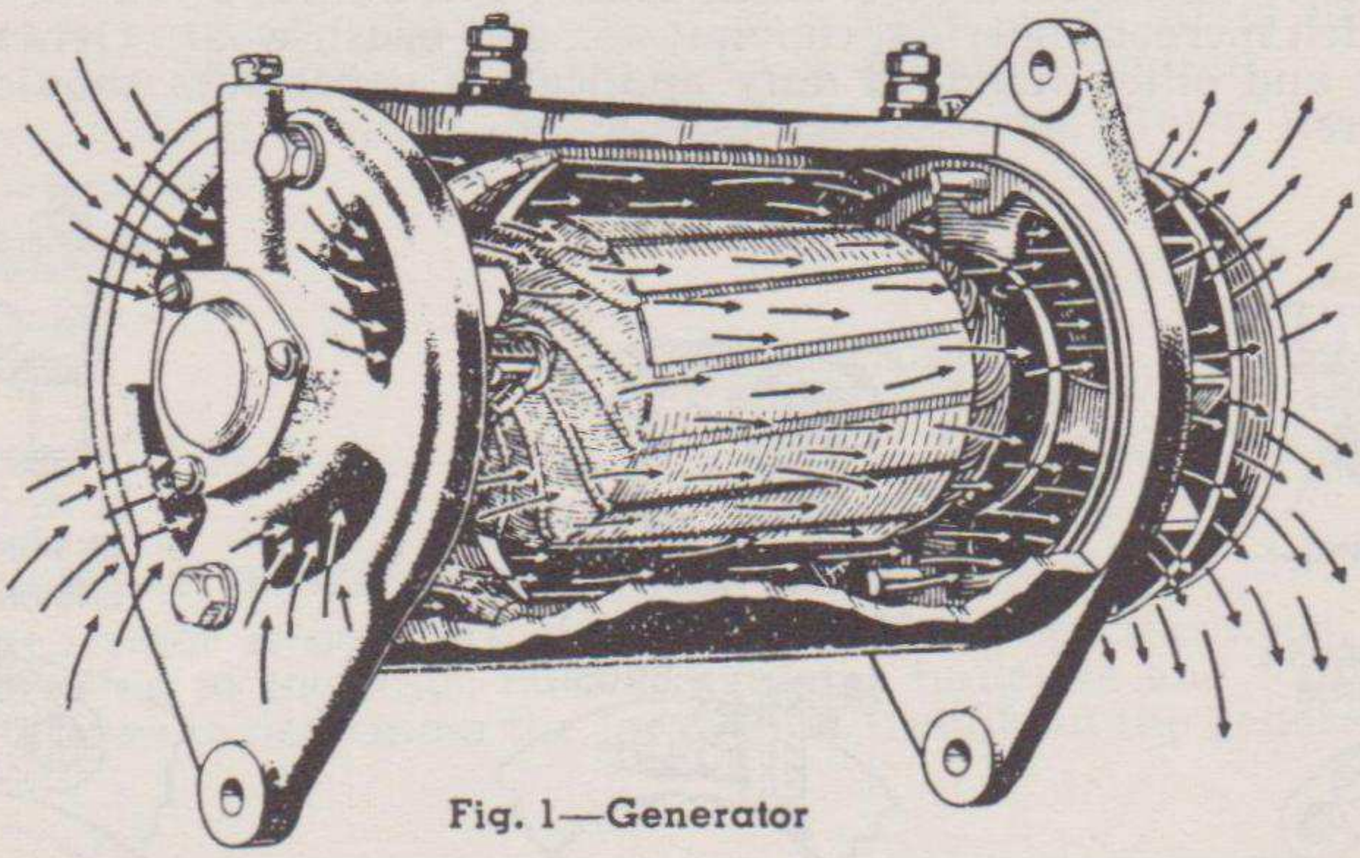

Fig. 1—Generator

THIRD BRUSH GENERATOR output may be checked as explained in the Service Bulletins on Voltage Regulators. On many of the third brush regulator models it will be found the third brush is fixed and cannot be adjusted. This type of unit is usually used with an external type or regulator. The output of adjustable third brush generators may be increased by moving the third brush in the direction of armature rotation and decreased by moving the brush in the opposite direction. The third brush is mounted on a movable ring in the commutator end frame. This ring is usually held by one or more clamping screws which must be loosened before the third brush can be moved. Some models have the screw accessible on the outside, while others with the locking screw located inside the commutator end frame require the removal of the cover band and the use of an offset screwdriver or an end wrench to loosen the screw. Always tighten the screw down well after adjusting the third brush.

The generator output should be checked and adjusted at the voltage specified in the test specification bulletin, since the generator output increases with generator voltage. Normally if the generator is checked with an accurate ammeter and a FULLY CHARGED BATTERY in the circuit, the proper voltage will be developed. Where a fully charged battery is not available, it will be necessary to insert into the charging circuit a ¼ ohm variable resistance of sufficient current carrying capacity and cut-in resistance until the proper voltage is obtained.

When checking a generator with a manually or thermostatically controlled field resistance, make sure the field resistance is cut out of the field circuit before attempting to check and adjust the generator output.

ALWAYS CHECK THE GENERATOR OUTPUT AT THE SPECIFIED VOLTAGE. NEVER SET THE OUTPUT BEYOND THE SPECIFIED VALUE, TO DO SO MAY RESULT IN FAILURE OF THE GENERATOR.

NORMAL GENERATOR MAINTENANCE

LUBRICATION: All bearings provided with hinge cap oilers should have 8-10 drops of light engine oil every 100 hours. Generators with grease cups and bronze bearings should have the grease cups kept filled with medium cup grease and turned down one turn every 50 hours. With ball bearings, the grease cup should be kept filled with ball bearing grease and turned down one turn every 100 hours. Do not lubricate excessively, sice excessive oiling may cause oil and grease to gum on the commutator and cause a reduction of the generator output. Never oil the commutator.

COMMUTATOR: If the commutator is dirty, it may be cleaned with a strip of No. 00 sandpaper. NEVER USE EMERY CLOTH TO CLEAN THE COMMUTATOR. All dust must be blown from the generator after the commutator has been cleaned. If the commutator is rough or out of round or has high mica, remove the generator from the engine and disassemble the armature from the generator. Turn the commutator down in a lathe, removing only sufficient material to true up the commutator and remove roughness and high mica. Undercut the mica.

INSPECTION: The cover band should be removed and the commutator and brushes inspected at regular intervals. The frequency of the intervals will be determined by the type of generator as well as the operation. High speed operation, dust and dirt encountered on ventilated units, taking full output from the generator, are all factors which increase bearing, commutator and brush wear. Generally speaking, passenger car and other standard duty application generators should be inspected every 500 hours.

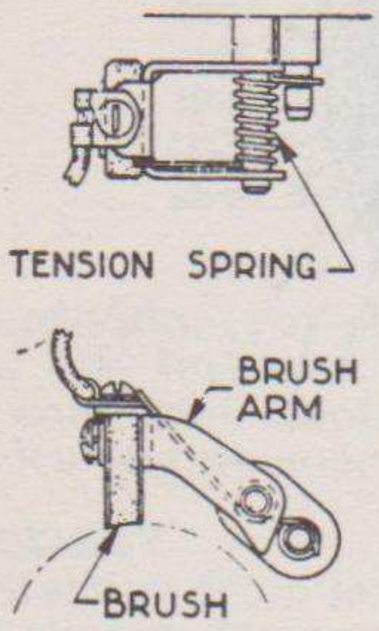

Fig. 2—Swivel type brush holder. Seat brush with bedding stone or No. 00 sandpaper. Never use emery cloth.

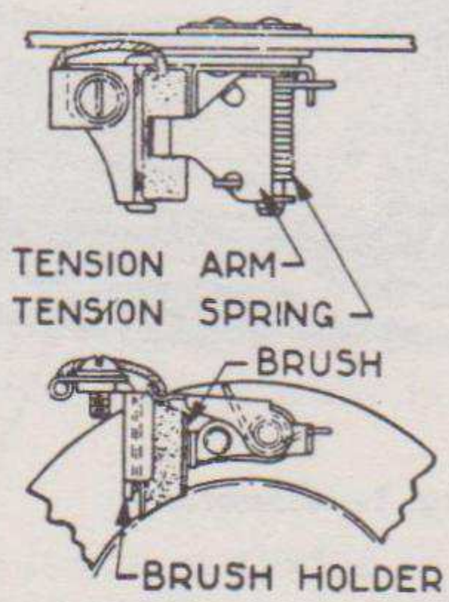

Fig. 3—Box type brush holder for smaller generators. Seat brush with bedding stone only. Never use sandpaper or emery cloth.

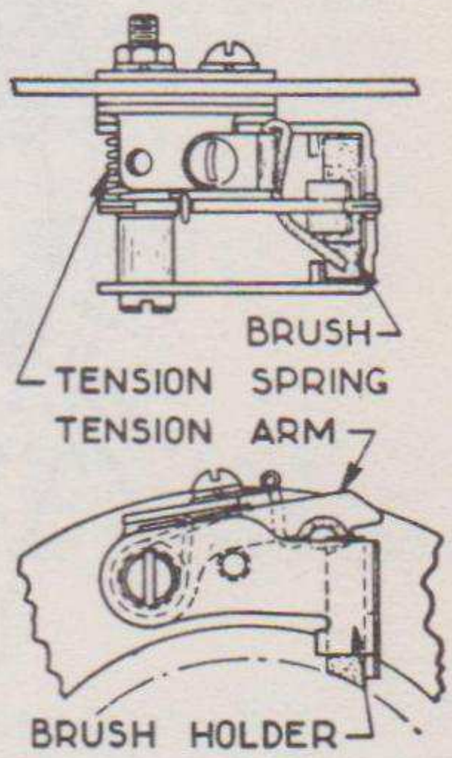

Fig. 4—Box type brush holder for large generators. Seat brush with bedding stone only. Never use sandpaper or emery cloth.

BRUSH SPRING TENSION: (Refer to Figures 2 to 4). Check the brush tension. Excessive spring tension will cause the commutator and brushes to wear rapidly. Low spring tension will cause a reduced generator output, and arcing and burning of the commutator and brushes. Check the pigtail lead connections at the brushes to see that they are tight. A poor connection in the charging circuit will cause the generator to build up excessive voltage which may result in burned field or armature windings. A poor connection in the generator field circuit will cause a low output.

BRUSHES: Replace worn brushes. Brushes may be seated by the use of a bedding stone. With the generator operating at a medium speed, press the bedding stone firmly against the commutator and move it back and forth along the commutator to cover the area contacted by the brushes. The brushes should seat satisfactorily in a second or two. Blow the generator out with compressed air after the stone has been used to remove all particles of abrasive. Brushes in swivel type holders may be seated with No. 00 sandpaper, but never attempt to seat brushes in reaction or box type holders by using sandpaper. NEVER USE EMERY CLOTH TO SEAT BRUSHES.

BELT: Check the belt and tighten if necessary. Low belt tension will cause a reduced and unsteady output. Excessive belt tension will cause rapid belt and bearing wear. Replace the belt if it is frayed or worn.

REVERSE POLARITY—If the polarity of the generator is reversed, the cut-out relay contact points will vibrate and burn. To make sure the generator has the correct polarity, after reconnecting the regulator, momentarily connect a jumper lead between the "GEN" and "BAT" terminals BEFORE STARTING THE ENGINE. The momentary surge of battery current to the generator will correctly polarize the generator.

1,000 HOUR CHECK: At intervals of approximately 1,000 hours depending upon the type of operation and the unit, the generator should be removed from the engine and completely disassembled. All parts should be cleaned. Do not clean the armature or fields in any degreasing tank, since the compounds used in this type cleaner may cause damage to rubber and mica or enamel insulation. Ball bearings should be thoroughly cleaned and repacked with ball bearing lubricant of the following specifications:

(a) 84-86% refined mineral oil and 14-16% sodium soap.

(b) Drip point not less than 400° F

(c) 175° for 200 hours without separation—shall not solidify above 0°.

All worn parts should be replaced. The commutator should be trued in a lathe and the mica undercut, if necessary. Check all wiring and connections internally and externally, since loose and corroded connections in the charging circuit may cause the generator to build up a dangerously high voltage which might ruin the unit. Poor connections in the field circuit will cause a low generator output.

Use Rosin Flux in making all soldered connections. Never use an acid flux on electrical connections.

OUTPUT ADJUSTMENT

Test Specifications:

Model 1101726	Cold Output		Hot Output	
	Amps.	Volts	Amps.	Volts
Field Current 1.5-1.67	8-10	14.4-14.9	6-8	14.1-14.5
Brush Tension 16 oz.				

CHECKING INOPERATIVE GENERATOR

If the generator is not performing according to specifications, and it has been checked according to the tests, in the regulator bulletins and found to be at fault, proceed as follows to determine the location of trouble in the generator.

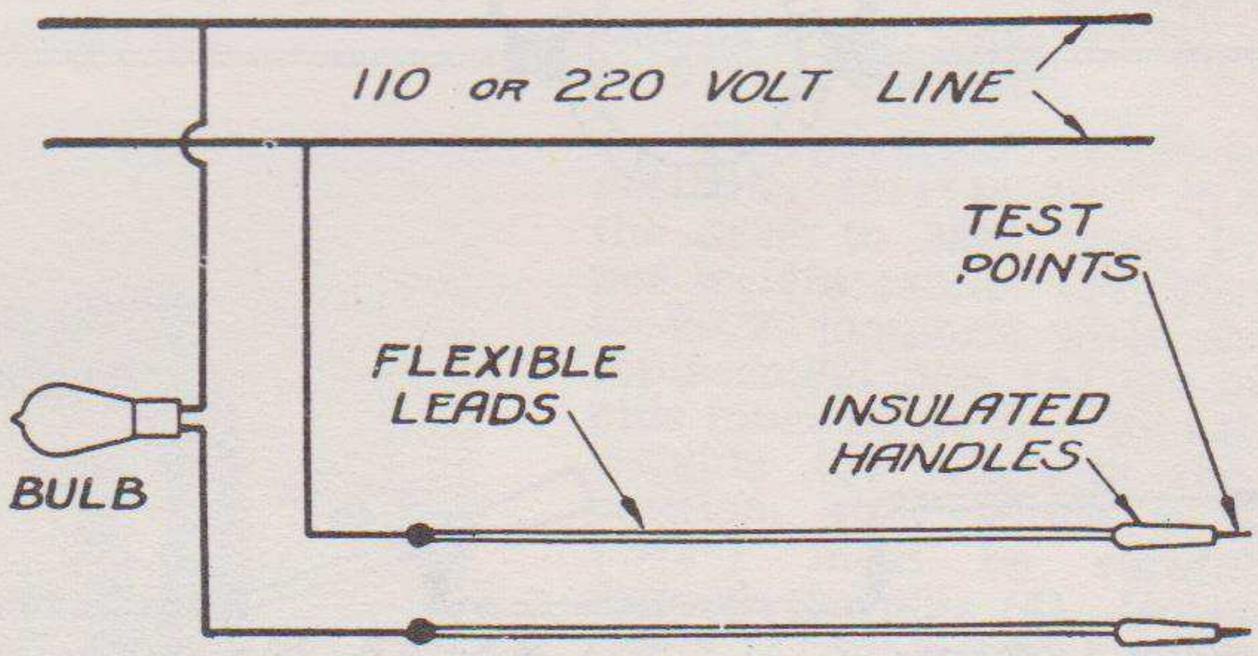

Fig. 5

NO OUTPUT: When no output can be obtained from the generator, remove the cover band and check for sticking brushes. If the brushes are seating satisfactorily and forming good contact with the commutator, remove the generator from the engine and test as follows with a set of test points and a 110 volt test lamp (Figure 5) to determine what has caused the failure.

1. Raise the grounded brush from the commutator and insulate it from the commutator with a piece of cardboard. Use the test points and check for ground from the generator main brush lead or "A" terminal to the generator frame. If the generator is of the type which has the field internally grounded, disconnect the field ground lead, before making this check. Should the test lamp light, indicating ground, raise and insulate all brushes and check in turn the insulated brusholders, armature commutator, and fields, to locate the ground. If a grounded field is found, check the regulator contact points, since a grounded field may permit a high field current which will cause burned and oxidized points. Repair or replace parts as required.
2. If the generator does not show ground, check the field circuit for open circuit. Repair or replace as required.
3. If the field is not open, check for shorts in the field current. Use a battery of the proper voltage and an ammeter, connected in series with the fields. Proceed with care in this check since a shorted field may draw an excessively high current. If the field current is not within specifications, new field windings will be required. Check the regulator contact points if a shorted field is found, since a shorted field may permit a high field current which will cause burned and oxidized points.
4. Inspect the commutator bars since an open circuit in the armature, which would result in a low or no output will cause the commutator bars connected to the open circuited coils to burn. A further check for open circuit in the armature requires that the armature be removed from the generator and tested as illustrated in Figure 6. Do not use rheostat for this test. Slowly rotate the armature, checking between adjacent bars with the test points. Any open circuited coils will cause a full battery voltage reading on the voltmeter.

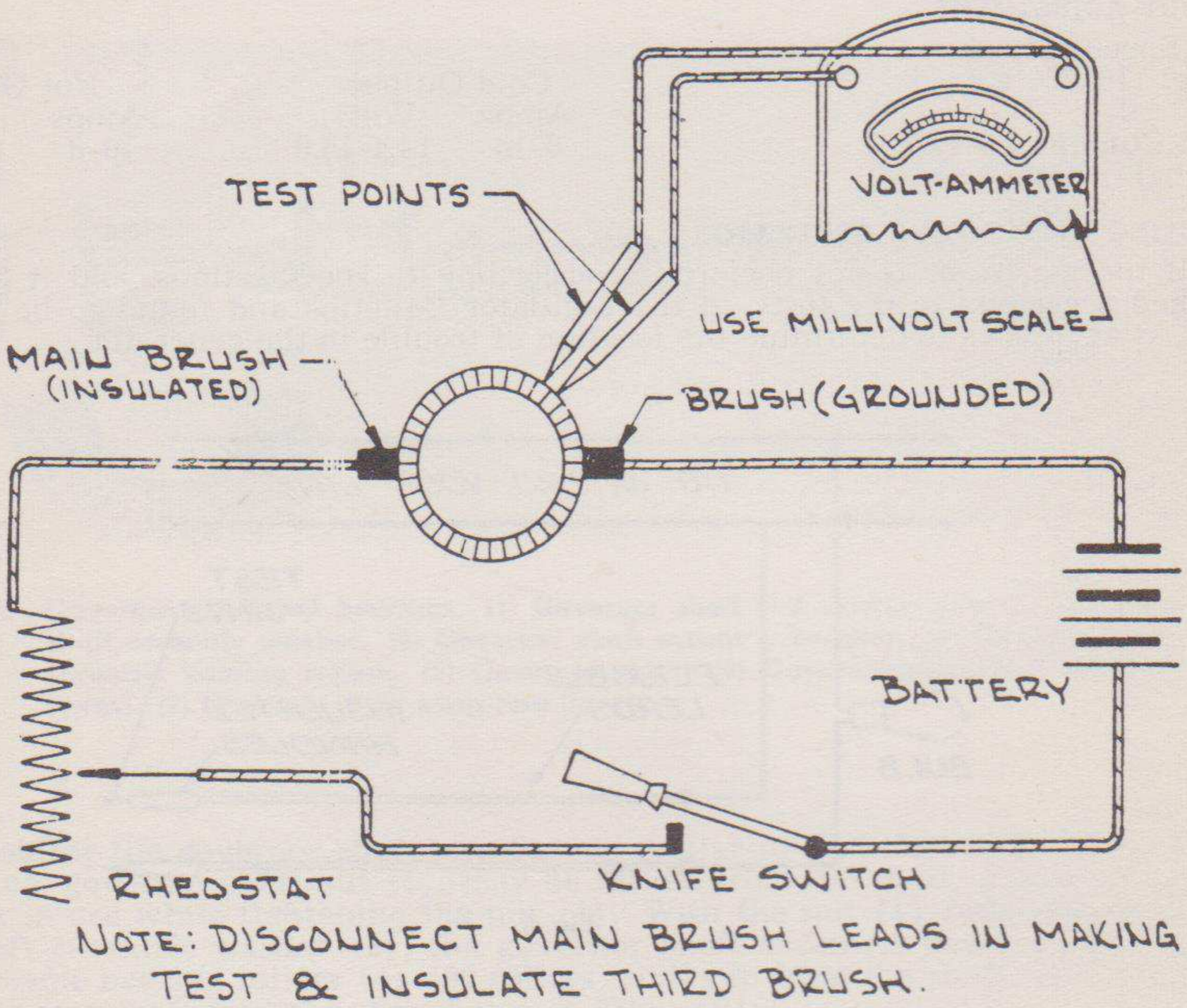

Fig. 6

5. If the trouble has not yet been located, check the armature for short circuit, using a "growler" as illustrated in Figure 7. A thin strip of steel, such as a discarded hack-saw blade, held in place over the armature core as the armature is revolved, will vibrate if a short circuit exists in the armature. Repair or replace as required.

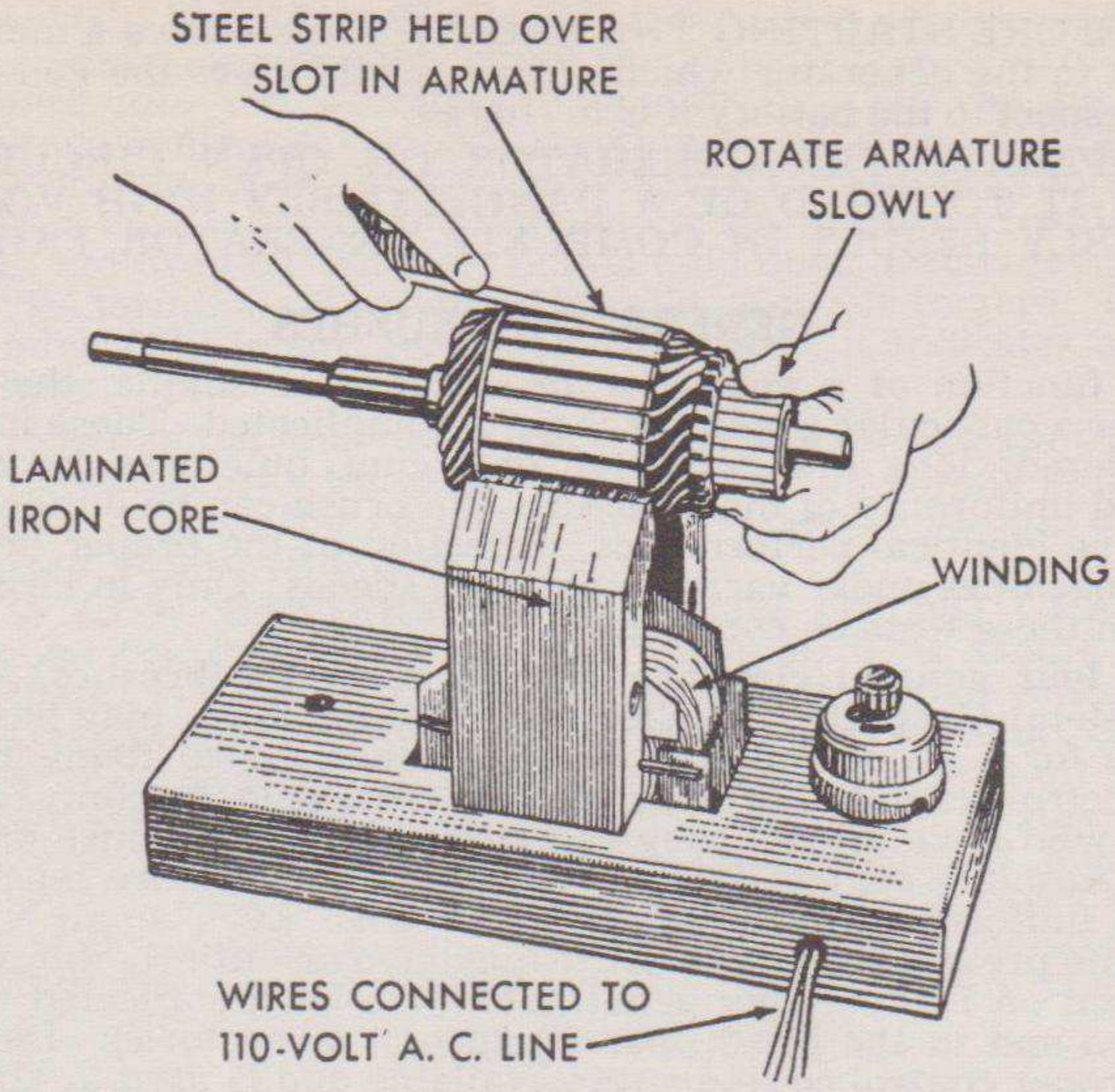

Fig. 7

UNSTEADY OR LOW OUTPUT

With a generator producing an unsteady or low output:

1. Check the drive belt tension since a loose belt will slip and cause a low and unsteady output.
2. Check the brush spring tension and the brushes for sticking in the holders. If the brushes stick in their holder or if the brush spring tension is low, a low and unsteady output will result, and there may also be arcing and burning of the brushes and commutator. Refer to Figures 2 to 4.
3. Inspect the commutator for roughness, grease and dirt, dirt in the slots, high mica, out of round, and burned bars. A dirty commutator will cause low and unsteady output and require that the armature be set up in a lathe and a light cut taken off the commutator. Undercut the mica. Burned commutator bars indicate an open circuit condition in the armature. Check the armature after disassembly of generator as outlined under NO OUTPUT, paragraphs 4 and 5.

EXCESSIVE OUTPUT

Excessive output will result in an overcharged battery, light bulb failure, burned contact points, and generator windings. Check with the test leads for a grounded field, if the generator is of the type employing external regulation, and the output remains high in spite of opening the field circuit by disconnecting the lead at the generator "F" terminal. The field may be grounded at the pole shoes due to their cutting through the field winding insulation, at their leads, or at the "F" terminal. Check for burned and oxidized regulator points if a grounded field is found.

Excessive output from a third brush generator which does not have external regulation is likely due to an incorrect third brush setting. Resistance in the charging circuit will have the effect, under certain conditions, of causing an excessive output.

NOISY GENERATOR

Noise in the generator may be caused by loose mounting, drive pulley or gear. Worn or dirty bearings may cause noise and require cleaning and relubrication or, if worn excessively, replacement. Brushes improperly seated may be seated by using a bedding stone as explained under BRUSHES, if they cause noise. A bent brush holder may cause noise and requires replacement.

INSTALLATION CAUTION

After the generator is reinstalled on the engine, and reconnected, always connect momentarily with a jumper lead between the generator armature terminal ("ARM" or "GEN") and the battery or ammeter terminal ("AMM" or "BAT") of the relay

or regulator BEFORE STARTING THE ENGINE. This allows a momentary surge of battery current to the generator which automatically gives the generator the correct polarity with respect to the battery it is to charge.

NEVER OPERATE THE GENERATOR ON OPEN CIRCUIT. TO DO SO WILL ALLOW IT TO BUILD UP A DANGEROUSLY HIGH VOLTAGE WHICH WILL PROBABLY RESULT IN COMPLETE GENERATOR FAILURE.

GENERATOR BRUSHES

While the function of a generator brush appears simple, the selection of the proper brush for a particular generator is quite complicated. These important features must be considered: long life, reduction of arcing, quietness, resistance, hardness, composition and uniformity of manufacture. No brush can be duplicated by chemical analysis and give identical performance. Selection of the proper brush requires life tests on many machines under various operating speeds. Only in large, well-equipped laboratories can these tests be conducted.

There are four general classifications of generator brushes, (1) Carbon, (2) Graphite, (3) Metal-Graphite, (4) Electro-Graphitic. Each may have its advantages over the others for a given application. At present, Delco-Remy high output generators use electro-graphitic brushes which are made by only a few reputable manufacturers who have proven they can consistently reproduce brushes to definite specifications. Absolute control at every point of manufacture must be exercised to obtain brushes uniform in performance and wear. Even small variations of raw material, molding pressure or temperature may give an entirely different specification. The brushes used on Delco-Remy generators have been subjected to repeated tests, both in our own and in the brush manufacturers' laboratories. Delco-Remy makes sure that the proper control equipment is available and is used at all stages of manufacture, to insure a high quality, long wearing brush.

Proper pig-tailing is also important. Good contact must be made between the brush material and conductor to prevent excessive heat from resistance. Without this important detail, the performance of an otherwise good brush would be ruined.

Replacement manufacturers offer mechanically interchangeable brushes for high output generators. The appearance is similar to the original electro-graphitic brush, but here the likeness ends. Do not experiment with brushes in automotive service. Use only the brushes specified by the original manufacturer and get proper performance and life.

GENERATOR OUTPUT CONTROL UNITS

STEP-VOLTAGE CONTROLS (Fig. 8)

The step-voltage control, consisting of a voltage control unit and a cut-out relay, is normally mounted either on the generator or on the engine side of the dash. It is used with third brush generators. Some models have an upper set on contact points on the cut-out relay armature to provide a convenient ground for the cranking motor solenoid relay circuit. This is a safety feature as the solenoid relay control circuit cannot be completed while the cut-out relay contact points are closed. This upper set of points has no connection with the operation of the voltage control. One model step-voltage control with the upper set of points has an extra terminal stamped "3B." An extra lead from the third brush in the generator is connected to this terminal. This type of control unit has the cranking motor solenoid relay circuit completed through the third brush of the generator to ground by means of this extra terminal. All the step-voltage control units are checked and adjusted in the same manner. However, THE ARRANGEMENT OF THE TERMINALS DIFFERS ON THE MODELS WITH THE EXTRA TERMINALS. Consequently, the meter connections must be made according to the terminal markings when checking the unit.

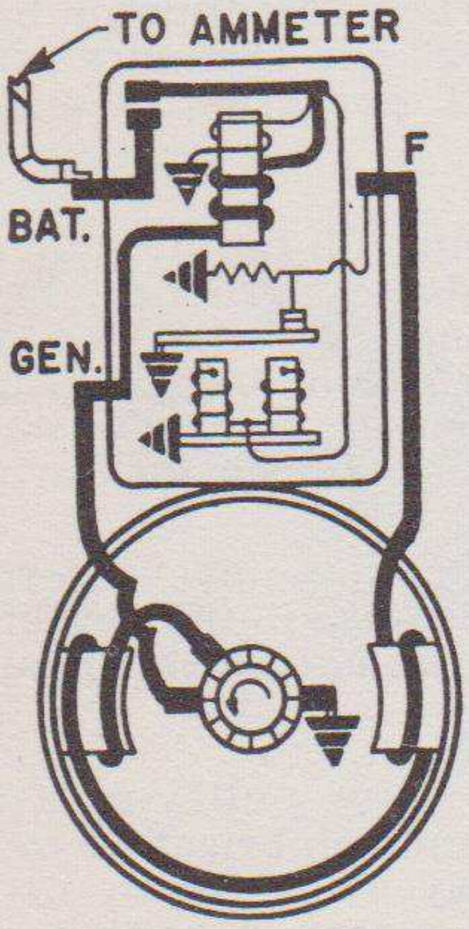

Wiring Diagram—Generator and Step-Voltage Control.

QUICK CHECKS TO DETERMINE IF UNITS ARE OPERATING NORMALLY (Figs. 9 & 10)

(1) A FULLY CHARGED BATTERY AND A LOW CHARGING RATE INDICATES NORMAL OPERATION. A check may be made to determine the maximum generator output as explained in the following paragraphs (2) and (3).

(2) WITH A FULLY CHARGED BATTERY AND A HIGH CHARGING RATE, it is necessary to determine whether or not the step-voltage control has operated to insert its resistance into the generator field circuit. This can be ascertained by removing the voltage control cover and checking to see if the voltage control points are open. If they are not, open them by depressing the voltage control armature by hand. If the output now falls off, the voltage control must be readjusted, as below. If the output does not drop off with the points held open, discount the lead from the voltage control "F" terminal. The output should drop off to zero. If it does not, it indicates a grounded field in the generator. If it does, it indicates a grounded field circuit in the voltage control unit.

It must be remembered that even after the step-voltage control has operated and inserted its resistance into the generator field circuit, it may still be possible for the generator to overcharge the battery. Under these conditions, it is desirable to reduce the generator output as explained below.

(3) WITH A LOW BATTERY AND A LOW OR NO CHARGING RATE, momentarily ground the voltage control "F" terminal. This should normally cause the output to increase. If it does not, check the generator further, since it is apparently incapable of producing specified output. If the output does come up, check the voltage control, since it is apparently not grounding the generator field circuit in a normal manner to permit increased output as the battery drops to a low state of charge. This may be caused by the voltage control points not making contact, due to oxidation or improper adjustment. Loose connections, defective wiring, or other causes of excessive resistance in the charging circuit will cause the voltage control to operate and reduce the generator output even though the battery is still in a low state of charge.

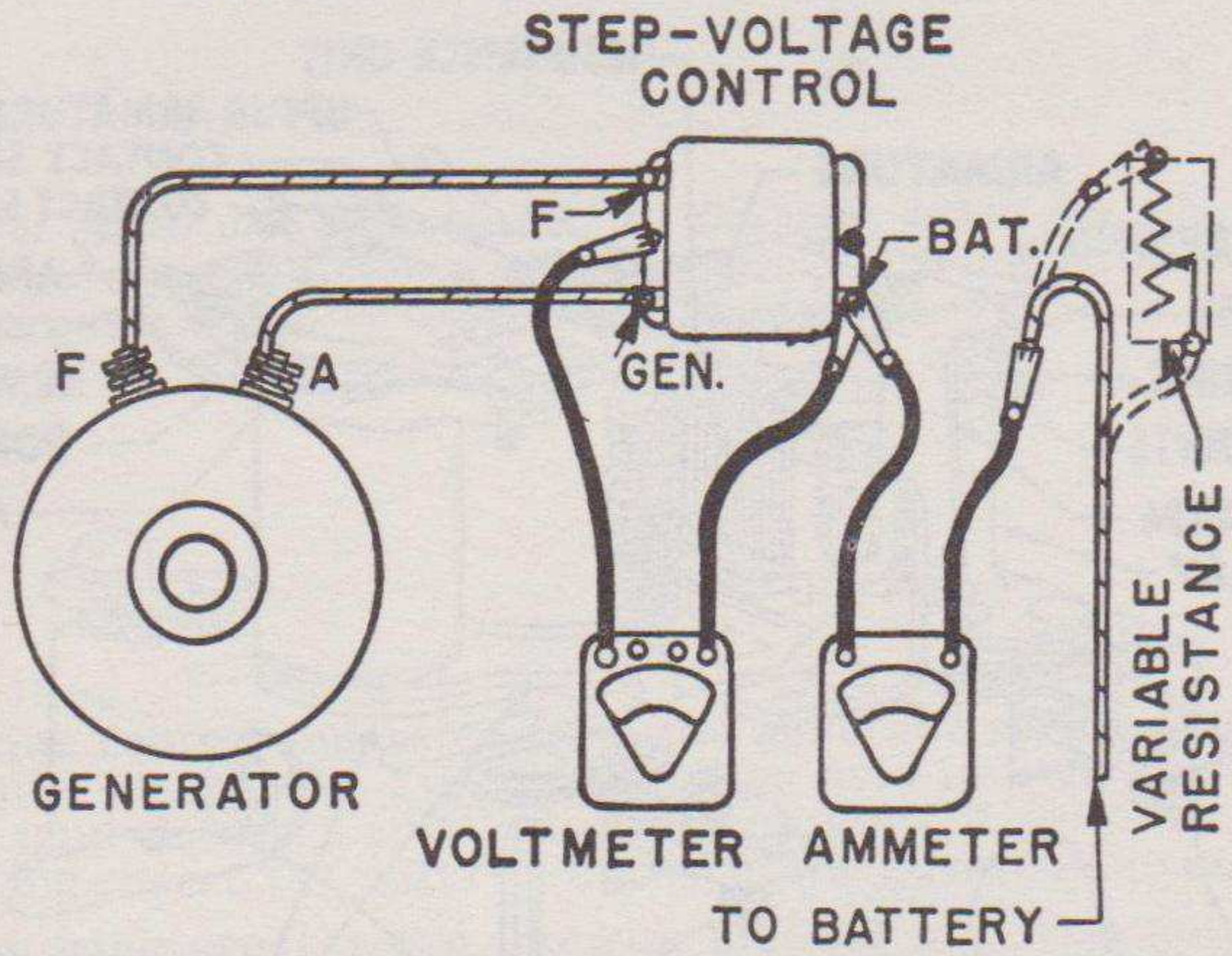

Fig. 9—Meter Connections to Check Step-Voltage Control and Generator Output.

On some applications, where the electrical requirements are small, it may be found that the generator output is sufficient to produce battery overcharge, even though it is within the specifications. With this condition, the generator output should be reduced by adjusting the third brush to just meet the operating requirements.

NEVER SET THE GENERATOR ABOVE THE SPECIFIED MAXIMUM. NEVER OPERATE THE GENERATOR OPEN CIRCUIT.

VOLTAGE CONTROL ADJUSTMENTS

Air Gap	*Point Opening*	*Contact Spring Tension*	*Armature Travel Inches*	*Points Open Volts* 70° F.	*Points Open Volts* 180° F.	*Points Closed Volts* 70° F.	*Points Closed Volts* 180° F.
.035	.010	.5-1.1	.030	15.4-16.35	14.4-15.35	13.9-15-1	12.8-14.1

CUT-OUT RELAY

Air Gap	*Point Opening*	*Points Close Volts* 70° F.	*Points Open Amps. Reverse Current*
.015	.020	13.0-14.2	0-4.0

Connect the meter test leads as illustrated in Figure 10, gradually increase engine speed and note reverse current necessary to open the points. Disconnect voltage control and refer to Figure 11, if adjustment is required.

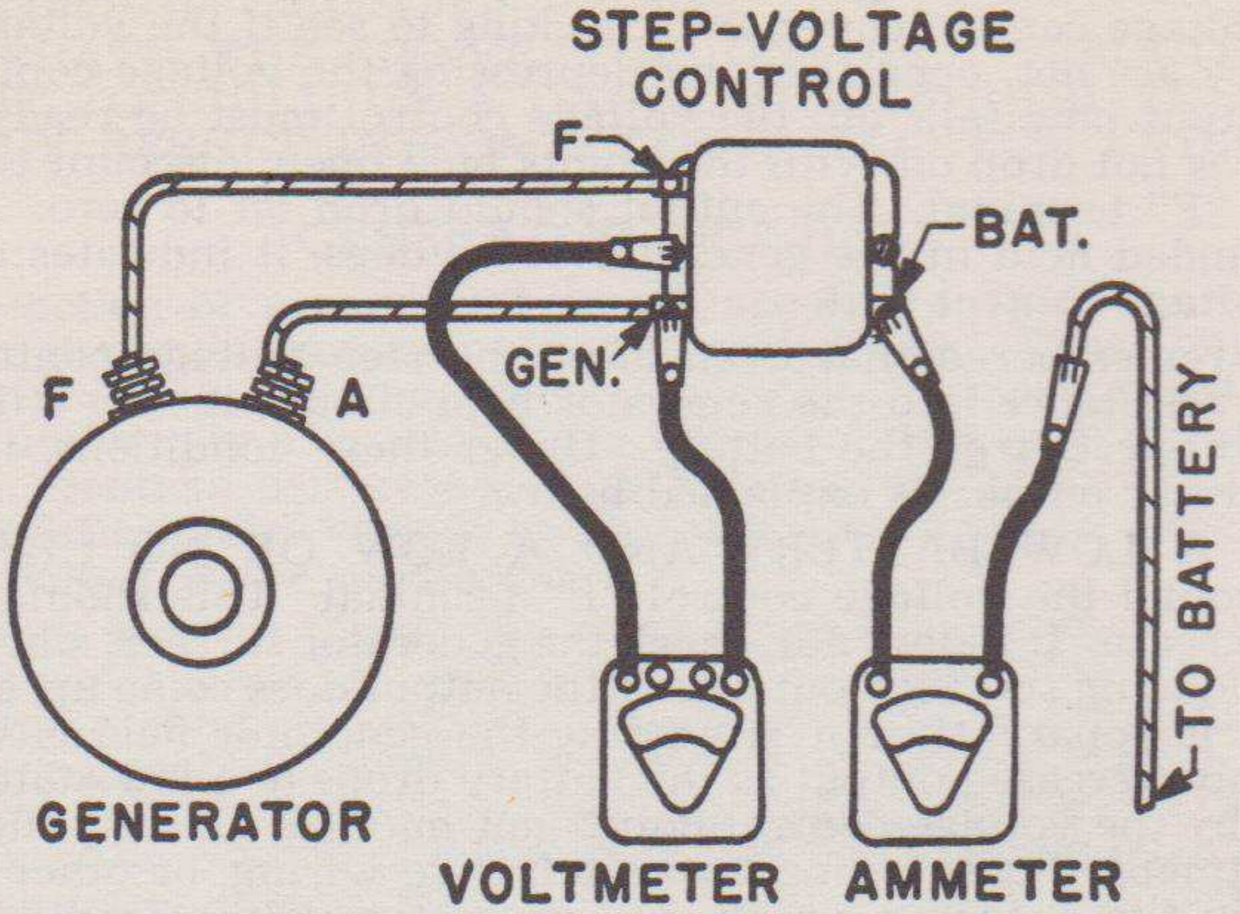

Fig. 10—Meter connections to Check Cut-Out Relay.

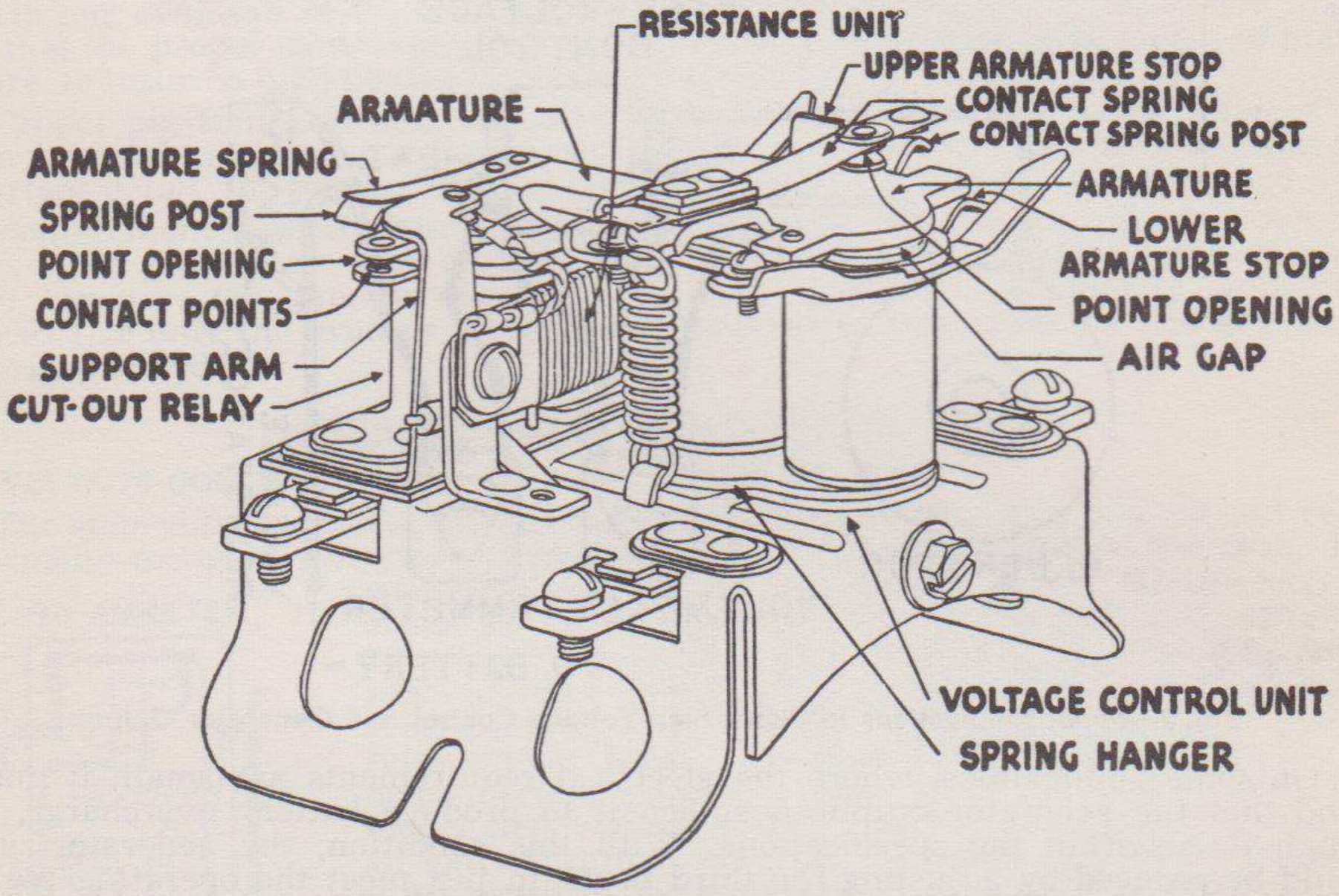

Fig. 11—Step-Voltage Control.

CLEANING CONTACT POINTS

The cut-out relay and voltage control points should be cleaned with a thin, fine-cut contact file. The contact file should not be allowed to become greasy and should not be used to file other metals. The contact points of the voltage control may be cleaned without disturbing their setting if care is taken to avoid bending the contact spring excessively.

NEVER USE SANDPAPER OR EMERY CLOTH TO CLEAN CONTACTS.

GENERATOR OUTPUT CHECK

The generator output may be checked by connecting an ammeter, voltmeter, and variable resistance (¼ ohm) as shown in Figure 9. Ground the "F" terminal of the voltage control with a jumper lead, operate the generator at the specified speed and adjust the variable resistance to secure the correct voltage. Note the output with the generator at operating temperature. Adjustment may be made as outlined by moving the third brush.

1. AIR GAP—With the contact points held closed, check the air gap between the armature and the center of the core. To adjust, loosen the two screws at the back of the relay and raise or lower the armature as required. Tighten screws securely after adjustment.
2. POINT OPENING—The point opening is adjusted by bending the upper armature stop (Figure 11). On the type with the extra set of contact points adjust by bending the support arm carrying the upper auxiliary contact point
3. CLOSING VOLTAGE—Reconnect the voltage control to adjust the relay closing voltage. Bend the spring post down to decrease the spring tension and the closing voltage. Bend up to raise the closing voltage.

VOLTAGE CONTROL UNIT

With the meters and the variable resistance connected as shown in Figure 9, gradually increase engine speed and note the voltage at which the contact points of the voltage control open. Decrease speed and note voltage at which the points close. VOLTAGE CONTROL UNIT MUST BE AT OPERATING TEMPERATURE AND THE COVER MUST BE IN PLACE.

If the battery is in a low state of charge, the voltage will not be sufficient to cause the voltage control to operate. To obtain sufficient voltage, operate the generator at a medium speed and slowly cut in resistance until the voltage control points open. Then cut out resistance until they close. To adjust, disconnect voltage control, refer to Figure 1 and proceed as follows:

SPRING TENSION—The spring tension, measured at the contacts with the armature up, should be approximately ¾ ounce at the instant the points separate. Adjust by bending the contact spring.

AIR GAP—Hold the armature down against the lower armature stop and set the air gap between the center of the core and armature by bending the lower armature stop.

ARMATURE TRAVEL—Release the armature and gauge the travel between the armature and the lower armature stop. The correct amount of travel is obtained by bending the upper armature stop backward or forward.

POINT OPENING—With the armature held down against the lower armature stop, measure the contact point opening. The point opening may be adjusted by bending the contact spring post.

VOLTAGE SETTING—The opening voltage may be adjusted by bending the spiral spring hanger down to increase the opening voltage setting or up to decrease the opening voltage setting.

The closing voltage setting may be adjusted by adjusting the AIR GAP. To raise the closing voltage, increase the air gap. To lower the closing voltage, decrease the air gap. It is only necessary to bend the lower armature stop slightly when adjusting the closing voltage. *NOTE:* After this adjustment, it may be necessary to readjust the contact spring post to maintain the correct contact point opening.

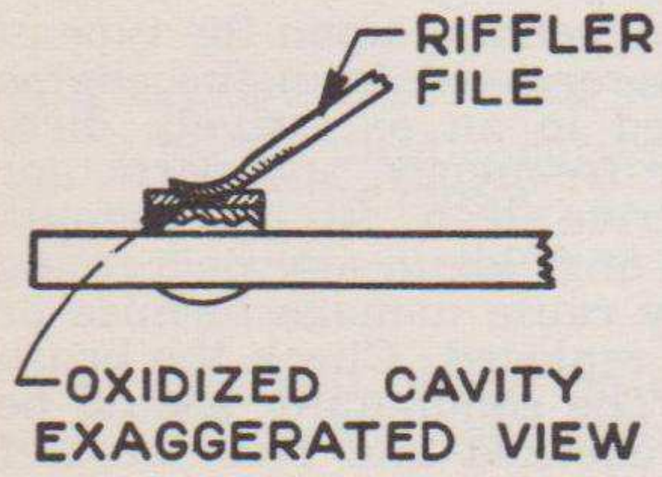

Fig. 12

CLEANING CONTACT POINTS (Fig. 12)

Cleaning the contact points of the voltage regulator properly is one of the most important operations the service man will be called on to perform. Dirty or oxidized contact points arc and burn, cause reduced generator output and rundown batteries. If the points are properly cleaned, the regulator will be restored to normal operation. If improperly cleaned, improvement in performance will be small and only temporary. The points should be cleaned one at a time with a spoon or riffler file. Loosen the two contact mounting screws so the upper contact bracket can be swung to one side; or the contact bracket may be removed entirely. A flat file cannot successfully be used to clean contact points, since it will not touch the center of the flat point, and will not clean out the slight cavity formed in the point surface during normal operation. Adjust AIR GAP (Page 00) after cleaning points. NEVER USE SANDPAPER OR EMERY CLOTH TO CLEAN CONTACT POINTS.

990620 O—52——15

STARTING MOTOR

In order that normal service be obtained from the cranking motor with a minimum of trouble, a regular inspection and maintenance procedure should be followed. Periodic lubrication, inspection of the brushes and commutator will insure normal operation and life to all parts. The disassembly of the cranking motor at stated intervals for a thorough overhaul is recommended as a safeguard against failure from accumulations of dust and grease, and abnormal wear of parts. The battery and external circuit must be kept in good condition. Defective cables, loose or corroded connections, and defective switch contacts must be checked for and eliminated when found. Any of these conditions will result in poor cranking motor performance.

NORMAL CRANKING MOTOR MAINTENANCE

LUBRICATION

All bearings provided with hinge cap or ball type oilers should have 8-10 drops of light engine oil every 300 hours. Grey iron or bronze bearings with grease cups should have the grease cups kept filled with medium cup grease and turned down every 100 hours. Ball bearings with grease cups should have the grease cups kept filled with ball bearing grease and turned down one turn every 100 hours. Oil plugs should be removed every 6 months and the reservoir packed with graphite grease. Do not lubricate excessively, since excessive oiling may cause oil and grease to gum on the commutator and reduce the cranking ability of the motor. Never oil the commutator. On some models oil wicks are used for lubrication of the center or drive end bearing. The wick is saturated with oil before assembly. Whenever the cranking motor is removed from the engine, the oil wick should be saturated with oil before the unit is reinstalled. All oilless type bushings should be supplied with a few drops of light engine oil. Lubricate cranking motor drives with a few drops of light engine oil. *Avoid excessive oiling.*

INSPECTION

The cover band should be removed and the commutator and brushes inspected at regular intervals. The frequency of the intervals will be determined by the type of cranking motor as well as the operation. Frequent starts, excessively long cranking periods, due to a hard-to-start engine, and excessively dirty operations, all will require that the inspection periods be more frequent. Generally speaking, cranking motors should be inspected every 500 hours of operation.

COMMUTATOR

If the commutator is dirty, it may be cleaned with a strip of No. 00 sandpaper. NEVER USE EMERY CLOTH TO CLEAN COMMUTATOR. All dust must be blown from the cranking motor after the commutator has been cleaned. If the commutator is rough or out of round, or has high mica, remove the unit from the engine, and disassemble the armature. Turn the commutator down in a lathe, removing only sufficient material to true up the commutator and remove roughness and high mica.

BRUSHES

Replace worn brushes. If brushes wear rapidly, check for excessive brush spring tension and roughness or high mica on the commutator.

YEARLY CHECK

At intervals of about once a year, the length of time depending upon the type of service and the operation, the cranking motor should be removed from the engine and completely disassembled. When machine is engaged in an excessively dirty operation, this disassembly should be made with greater frequency, and particular attention should be given to keeping the cranking motor drive clean. All parts should be cleaned after disassembly. Do not clean the armature or fields in any degreasing tank, since the compounds used in this type cleaner may cause damage to mica or enamel insulation and rubber. All worn parts should be replaced. Check the brush holders to make sure they are free on their pivot pins. The commutator should be trued in a lathe. All connections should be carefully checked and resoldered if necessary. Use rosin flux in making soldered connections. Never use an acid flux on electrical connections. Submit the reassembled unit to a No-Load and a Torque test.

THE BENDIX DRIVE should be well cleaned, and lubricated by the addition of a small amount of light engine oil. Avoid adding more than a small amount of oil, as this woud tend to gum on the spiral and prevent proper action. If the pinion teeth are badly burred, replace the pinion. Check the drift pin spring. since the pinion would tend to drift into mesh while the engine is running if this spring is weakened.

CHECKS ON IMPROPERLY OPERATING CRANKING MOTOR

If the cranking motor does not develop rated torque and cranks the engine slowly or not at all, check the battery, battery terminals and connections, the ground cable and the battery to cranking motor cable. Corroded, frayed, or broken cables should be replaced, and loose or dirty connections corrected. The cranking motor switch should be checked for burned contacts and the switch or contacts replaced as necessary.

If all these are in order, remove the cover band of the cranking motor and inspect the brushes and commutator. The brushes should form good contact with the correct brush spring tension. A dirty commutator can be cleaned with a strip of No. 00 sandpaper held against the commutator with a stick, while the cranking motor operates with the ignition switch off. NEVER USE EMERY CLOTH TO CLEAN COMMUTATOR. If the commutator is very dirty or burned, or has high mica, remove the cranking motor, disassemble the armature and take a cut off the commutator in a lathe.

If there are burned bars on the commutator, it may indicate open circuited armature coils which will prevent proper cranking. Inspect the soldered connections at the commutator riser bars. An open armature will show excessive arcing at the commutator bar which is open, on the no-load test.

Tight or dirty bearings will reduce armature speed or prevent the armature from turning. A worn bearing, bent shaft, or loose field pole screws will allow the armature to drag on the pole shoes, causing slow speed or failure of the armature to revolve. Check for these conditions.

If the brushes, brush spring tension and commutator appear in good condition, the battery and external circuit found satisfactory, and the cranking motor still does not operate correctly, it will be necessary to remove the cranking motor for no-load and torque checks.

TEST SPECIFICATIONS

Model 1109108 Starting Motor

	No-Load Test			Lock Test		
	Amp.	Volt.	R.P.M.	Amp.	Volt.	Torque Lbs.
Brush Tension, 36-40 oz.....	65	12	4500	725	4.8	44

TORQUE TEST: Torque test equipment such as illustrated in Figure 14 is required to determine if the cranking motor will develop its rated torque. The cranking motor is securely clamped in position and the brake arm hooked to the drive pinion. If the brake arm is one foot long, the torque, when the circuit to the cranking motor is closed, may be read directly from the scale. Some types of torque testers indicate the reading directly on a dial. It is advisable to use in the circuit a high current carrying variable resistance, so that the specified voltage at the motor can be obtained. A small variation of the voltage will produce a marked difference in the torque developed.

INTERPRETING RESULTS OF NO LOAD AND TORQUE TESTS

1. Rated torque, current draw and no-load speed indicates normal condition of cranking motor.
2. Low free speed and high current draw with low developed torque may result from:
   a. Tight, dirty, or worn bearings, bent armature shaft or loose field pole screws which would allow the armature to drag.
   b. Shorted armature. Check armature further on growler. (Figure 13)
   c. A grounded armature or field. Check by raising the grounded brushes and insulating them from the commutator with cardboard, and then checking with a test lamp between the insulated terminal and the frame. If test lamp lights, raise other brushes from commutator and check fields and commutator separately to determine whether it is the fields or armature that is grounded.

3. Failure to operate with high current draw:
   a. A direct ground in the switch, terminal or fields.
   b. Frozen shaft bearings which prevent the armature from turning.
4. Failure to operate with no current draw:
   a. Open field circuit. Inspect internal connections and trace circuit with a test lamp.
   b. Open armature coils. Inspect the commutator for badly burned bars. Running free speed, an open armature will show excessive arcing at the commutator bar which is open.
   c. Broken or weakened brush springs, worn brushes, high mica on the commutator, or other causes which would prevent good contact between the brushes and commutator.
   Any of these conditions will cause burned commutator bars.
5. Low no-load speed, with low torque and low current draw indicates:
   a. An open field winding. Raise and insulate ungrounded brushes from commutator and check fields with test lamp.
   b. High internal resistance due to poor connections, defective leads, dirty commutator and causes listed under 4. c. above.

HIGH POINTS ON CRANKING MOTOR PERFORMANCE AND CHECKS:

1. On the manual shift type cranking motor with overrunning clutch, the foot must not be left on the starter pedal after the engine begins to operate, as this may be injurious to the overrunning clutch.
2. Burned commutator bars may often be found to be caused by poor soldering of leads at the commutator riser bars. Excessively long cranking periods which allow the cranking motor to overheat and the solder to melt and throw out is a common cause of this condition. When burned bars are found, the leads should be resoldered in the riser bars and the commutator turned down.
3. Be sure the brush holders are free and that the brush leads are not holding the brushes up off the commutator. There must be good firm contact between the commutator and brushes.
4. The commutator must be smooth and round. Roughness or an out of round condition causes rapid brush wear and inferior cranking motor performance.
5. The cranking motor drive must be kept clean so it will operate freely and return to its normal position after each starting cycle.
6. The battery cables and connections between the cranking motor and the battery must be in good condition to insure good cranking motor performance.

STARTING CIRCUIT

The starting circuit should be inspected to be sure all connections are clean and tight and that the insulation on the wires is not worn or damaged. The starting circuit should be given a voltage loss test to make sure there is no loss of starting motor efficiency due to high resistance connections. In making this check the voltage loss from the battery to the starting motor terminal should not exceed .12 volts maximum for each 100 amperes. The loss in voltage between the battery ground post and the starting motor frame should not exceed .12 volts maximum for each 100 amperes. If the voltage loss is greater than the above limits the voltage should be measured over each part of the circuit to locate the resistance causing voltage loss. When measuring the voltage loss across solenoid switches the contacts should be closed electrically to simulate actual conditions of operations.

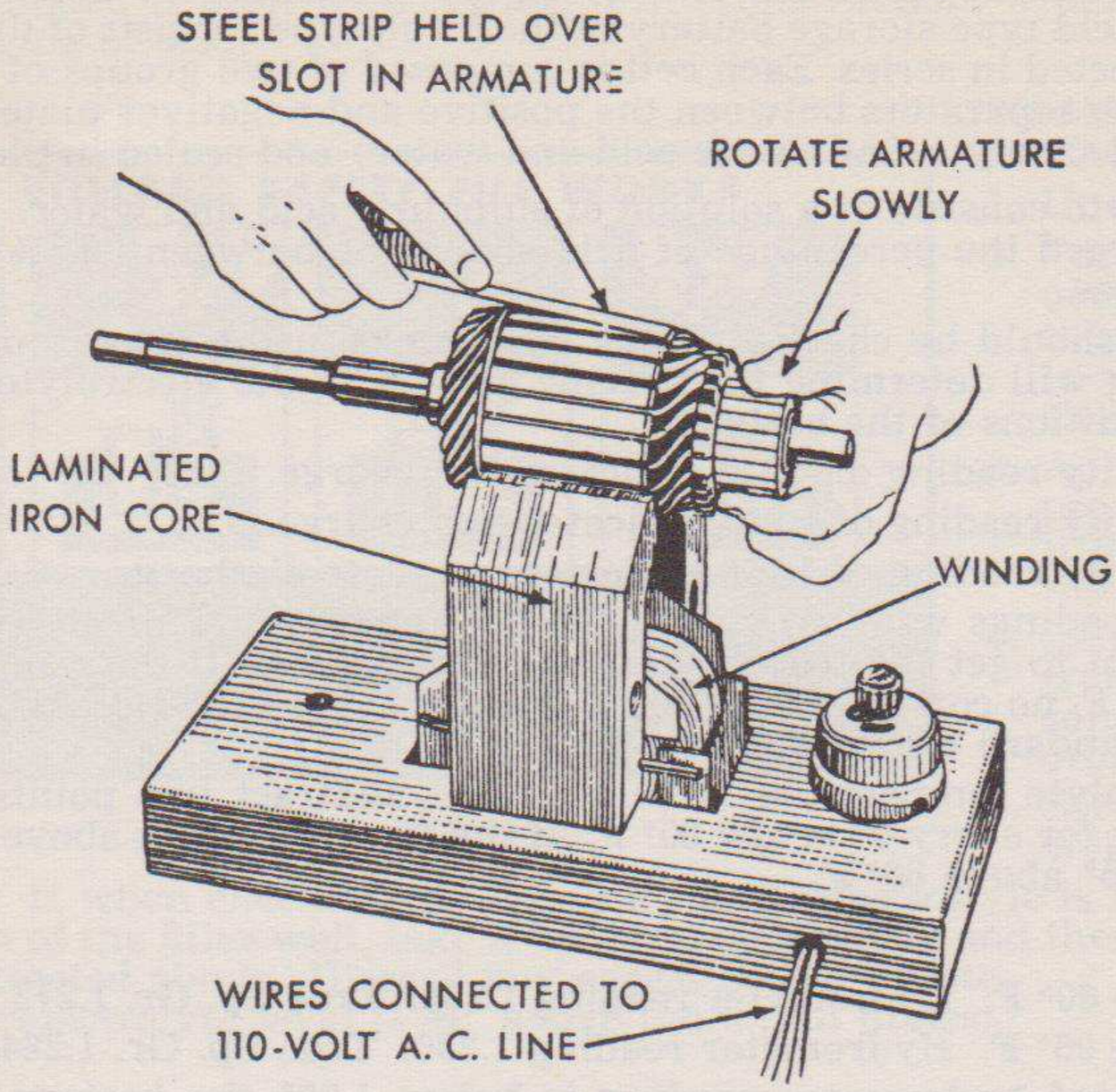

Fig. 13—Growler.

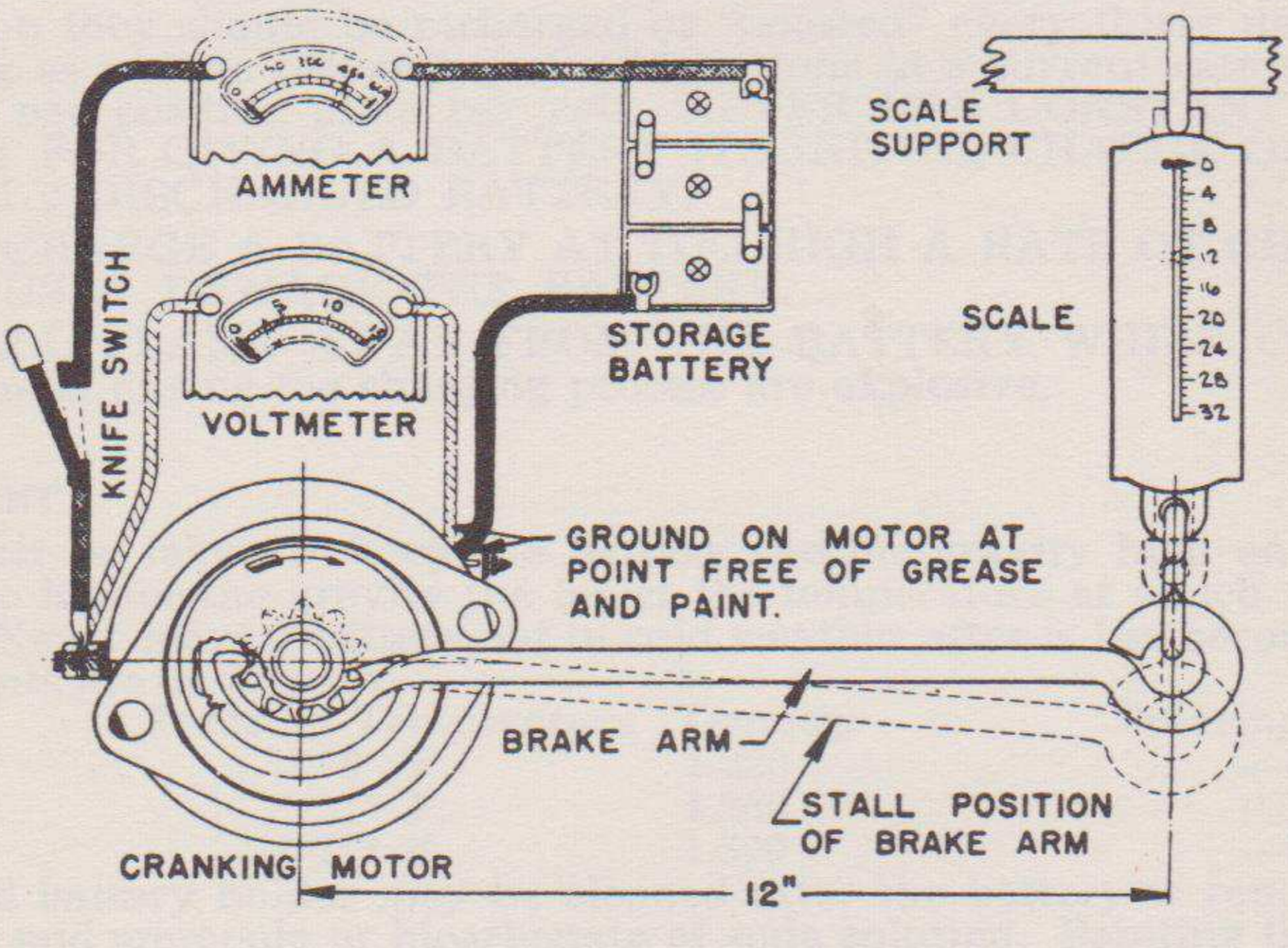

Fig. 14—Torque Test.

BATTERY

The two storage batteries are located in the compartment under the operator's seat. Each lead-acid type storage battery of the 6 volt type consists of three cells of two volts each, connected in series. Each cell is composed of two groups of plates, positive and negative with separators between the positive and negatives plates. This element is immersed in electrolyte (sulphuric acid and water) and sealed in place.

The electrolyte consists of a solution of sulphuric acid and water. When the battery is fully charged the percentage of acid should be between 36.5% and 39.2% for temperate climates.

The battery should be checked every two weeks, using a hydrometer. The hydrometer reading will determine the specific gravity of the electrolyte which in turn indicates the conditions of the battery.

Specific gravity reading of 1.275 indicates full charge.

Specific gravity reading of 1.225 indicates half charge.

Specific gravity reading of 1.150 indicates complete discharge.

In making readings with a hydrometer the temperature of electrolyte must be taken into account to get the true specific gravity reading. If the temperature of the electrolyte is 80° F. no correction is necessary as WILLARD STORAGE BATTERIES are based on a standard temperature of 80° F.

If the electrolyte temperature is below 80° F. subtract two points from the hydrometer reading for every 5° below 80° F. If the temperature is above 80° F. add two points for every 5° above 80° F.

EXAMPLE:

Temperature 60° F. Hydrometer reading 1.280. True Sp. Gr. 1.272.

Temperature 90° F. Hydrometer reading 1.280. True Sp. Gr. 1.284.

If the corrected hydrometer reading is below 1.225 the battery should be recharged from an outside source. If the individual cell readings vary more than 15 or 20 points from each other it is an indication that the battery may be nearing the end of its life.

KEEP BATTERY TERMINAL CONNECTIONS CLEAN AND TIGHT. Coating the terminals with vaseline will prevent corrosion.

Be sure the battery is held securely in place by the hold down frame. Do not use excessive force when tightening the hold down nuts, to avoid danger of breaking the container.

OPERATION OF WILLARD "SAFETY-FILL"

The SW-4-136 WILLARD BATTERY with which the GALION 101 MOTOR GRADER is equipped is built with "Safety-Fill" construction, which prevents over-filling and spraying of acid.



TO ADD WATER TO BATTERY:

1. Unscrew filler cap.
2. Force filler cap down over the vent tube thus forming an air lock in breather chamber.
3. Add distilled or approved water until it is near the top of the filler well.
4. Remove filler cap from vent tube and solution will then drop to correct level.
5. Screw cap in filler well.

CAUTION: If when checking the liquid level the electrotyle is found to be even with the bottom of the filler well, take a hydrometer reading and then return solution to the cell as directed above. Discard any excess of electrolyte.

The proper electrolyte level is ⅜" above the top of plates.

GENERAL CARE—TO BE CHECKED EVERY TWO WEEKS

1. Test battery with hydrometer.
2. Check electrolyte level. Excessive use of water indicates too high a charge rate. (Check generator regulator setting)
3. Be sure all connections are clean and tight.

MAINTENANCE—Charged batteries not in service will show a gradual and continuous drop in specific gravity as the acid will slowly react with the active materials even when there is no closed external circuit. This drop is much slower when the batteries are kept below 70° F. In order to hold batteries in storage in good condition they should be recharged or "boosted" every thirty days if possible. This boosting as well as recharging should be done at a current rate about equal to one ampere per positive plate per cell. NEVER USE CONSTANT POTENTIAL EQUIPMENT FOR GIVING A BATTERY ITS INITIAL CHARGE OR RECHARGING A BADLY DISCHARGED BATTERY.

NEVER CHARGE A BATTERY AT TOO HIGH A RATE OF CHARGE—THIS CAN SERIOUSLY DAMAGE THE BATTERY.

KEEP ALL FLAME AWAY FROM THE BATTERY WHILE CHARGING as the gases formed during the charging process are explosive.

FREEZING POINT

Care must be taken to keep the battery specific gravity high enough to avoid freezing. The higher the gravity the lower the temperature at which the electrolyte will freeze. Never leave a battery out in cold weather after is has become discharged. Freezing points are as follows:

Gravity	*Freezing Temperature*	*Gravity*	*Freezing Temperature*
1.100	18° F.	1.220	—31° F.
1.160	1° F.	1.260	—75° F.
1.200	—17° F.	1.300	—95° F.

Corroded battery holder may be cleaned after the battery is removed by using a wire brush and ammonia or bicarbonate of soda solution. Painting the holder with acid-proof paint will protect it.

INDEX

ALIGNMENT OF FRONT WHEELS 2
BEARING ADJUSTMENT 1
FRONT AXLE 1
STEERING ADJUSTMENT AND REPAIR 3
WHEELS—FRONT 1

I. FRONT AXLE

The front axle unit consists of a major welded assembly equipped with bushed spindles for tilting and steering. Tie rods consist of (2) rods with fixed end yokes on the outer end with adjustable yokes and lock nuts on the opposite end for adjustment.

Bushings in spindles and all parts are easily replaced by pressing the old bushings out of the casting and pressing new bushings in place. To change spindle bushings the spindle must be removed from the grader. To remove spindle first remove the lock pin which holds the pivot pin in place and then drive pivot pin out of the spindle.

II. LEANING WHEEL CYLINDER

The leaning wheel cylinder is mounted in the front axle and controls the leaning of the front wheels for certain operating conditions of the grader.

REPAIR OF CYLINDER—Refer to Hydraulic section.
HOSE REPAIR—Refer to Hydraulic section.
TUBING—Refer to Hydraulic Section.

III. FRONT WHEELS (Fig. 1)

1. TO REMOVE FRONT WHEEL—Jack up the front wheel (front axle). Remove the three cap screws (31) which hold the hub cap in place. Remove hub cap (26) and cap gasket. Remove locking nut (27) and nut lock (28). Remove adjusting lock (29) and knuckle nut (30). The outer bearing (25) can be removed with the wheel. Inner bearing (23) and grease retainer (19) can be removed after the wheel has been removed.

2. In reassembling wheel and bearings pack in grease and assemble in reverse order as listed above being sure that nut lock is bent over one of the "flats" of lock nut.

3. ADJUSTMENT OF FRONT WHEEL BEARINGS (Figure 1)—After removing adjusting lock, draw up adjusting nut snugly, or until considerable drag is felt when rotating the wheel. Now turn the nut back about one-sixteenth of a turn and re-assemble the adjusting lock, nut lock and locking nut. Check the adjustment after the above parts are replaced to be sure there is no excessive drag on wheel which would mean that the bearings were too tight. If there is play in the bearings this indicates that the bearings have not been properly adjusted and should again be tightened. After the proper adjustment has been reached be sure that nut lock is bent over one of the "flats" of lock nut. Replace hub cap and gasket.

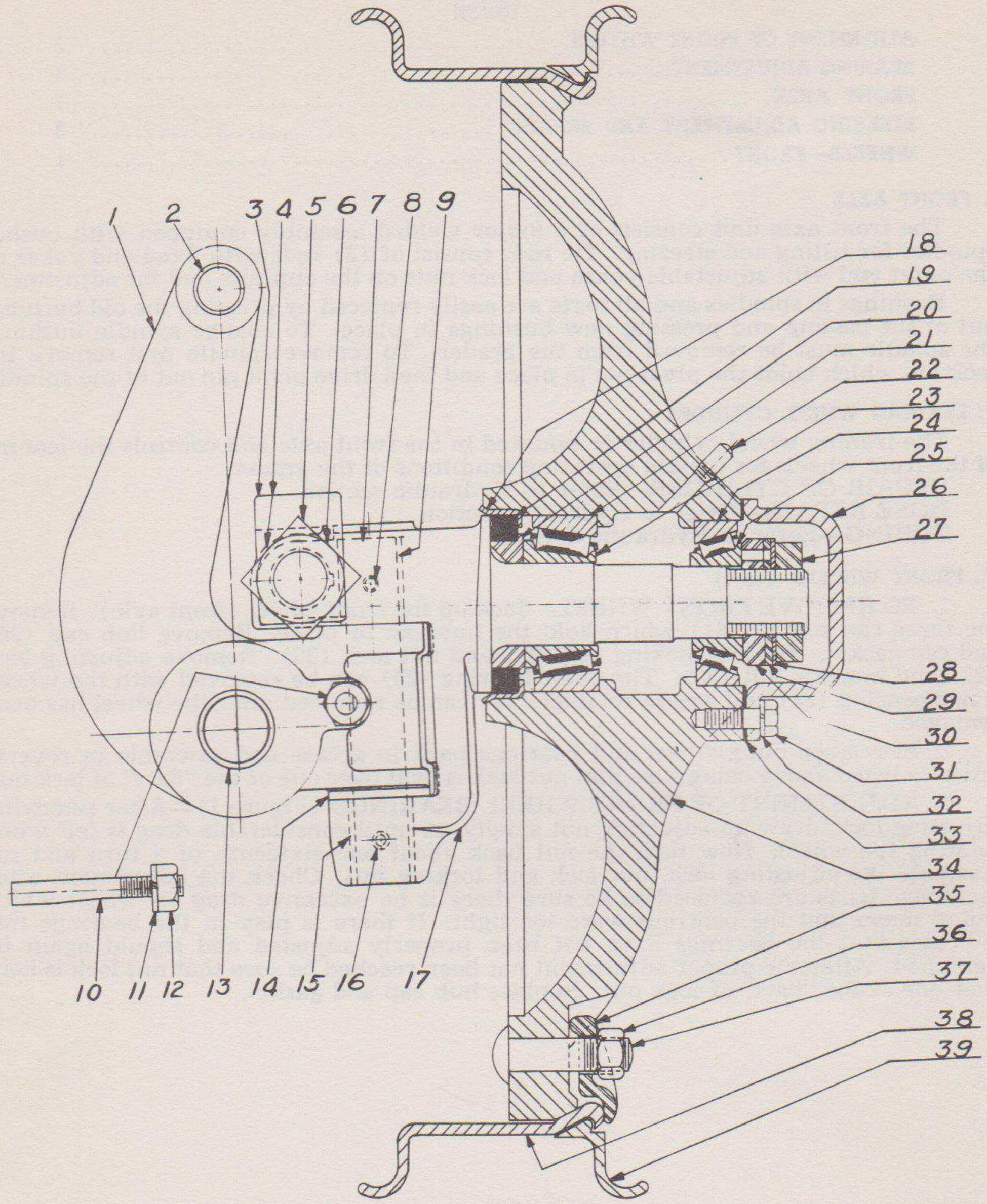

Fig. 1—Front Wheel

FRONT WHEEL ALIGNMENT

The front wheels must be kept in proper alignment in order to assure ease of steering and satisfactory tire life. Important factors of front wheel alignment are: Toe-in and camber.

These points should be checked occasionally to guard against excessive tire wear and difficult steering.

WHEEL TOE-IN

The specified toe-in front wheel is ⅛ to ⅜ inches.

Front wheel toe-in is the setting of the front wheels so that they are closer together at the front of the axle than at the rear.

Incorrect toe-in of front wheels will result in rapid tire wear. Excessive toe-in will produce a scuffing and rapid wear at the inside edge of tire tread. Toe-out will produce a like wear condition at the outside of the tire tread.

The following method of checking and correcting toe-in will produce accurate results:

1. Inflate front tires to proper and equal pressures and have front wheels on level surface.
2. Adjust steering so wheels point straight ahead and adjust leaning wheel controls so wheels are vertical.
3. Measure at front and back the distance between the inside machined faces at rim of wheel at hub center height from floor. Difference between measurements denotes amount of toe-in or toe-out present. Measurement at front should be less than at rear of wheel center rims.
4. To change adjustment: loosen tie rod lock nuts and turn the adjustable yoke on proper side for required adjustment. Adjustable tie rod yokes being provided each side of coupling to lower steering arm. Be sure that lower steering arm is in exact center position so adjustment of both yokes can be accomplished to secure perfect wheel adjustment.
5. Roll grader forward or back to secure a partial turn of front wheels and check measurements.
6. When specified toe-in has been attained, tighten lock nuts securely.

NOTE: Always re-check toe-in after any alteration in tie-rod adjustment.

WHEEL CAMBER

Front wheel camber is the inclination of the wheel from a vertical plane.

Positive camber is a wheel with outward tilt.

Negative camber is a wheel with inward tilt.

The specified positive camber of Galion No. 101 Motor Grader front wheels is 2 degrees.

The camber of front wheels is accomplished by angle of the spindles themselves.

If check shows loss of proper camber, check pivot pins and pin bearings for wear and main front axle assembly for damage.

Front wheel camber is fixed in manufacture and is not adjustable except by replacement of worn parts.

IV. STEERING PARTS

1. STEERING VALVE AND BRACKET ASSEMBLY (Figure 3)

The purpose of this valve and bracket assembly is to control the action of steering and speed of its control.

Disassembly:

Remove jam nuts (3) followed by cap (5) and sleeve (4). Take off housing (6) and remove nuts (8). At this point the upper steering spring (10) can be replaced. To further disassemble steering bracket proceed as follows: Remove collar (18) from steering shaft and pull wheel and shaft out of bracket. The base of the steering assembly can now be removed after the two cap screws are removed. At this point the lower steering spring (19) can be replaced. To remove steering vertical rod remove pin (23) and lift rod (9) from piston.

To assemble proceed in reverse order of the above outline.

2. ADJUSTMENT OF STEERING (Figure 2)

The control of steering is adjusted as shown in the following instructions and any desired speed control can be obtained.

Turn "A" up or down as required until speed of steering to the left is satisfactory. Then loosen jam nuts and turn them up or down until steering to the right is satisfactory. In making the above adjustments it is necessary to make trial turns with the steering wheel. After the desired steering speed is obtained, securely tighten jam nuts and small nut at top of stud "B".

STEERING GENERAL

Keep nut on lower end of vertical steering shaft, securing lower steering arm tight at all times.

STEERING CYLINDER

The steering cylinder is mounted on the front section of the grader above the frame. For details see Hydraulic Section.

VERTICAL SHAFT AND BUSHINGS

To remove the vertical steering shaft, first remove the lower steering arm by taking lock nut and washer off of shaft. Remove pin which connects top steering arm

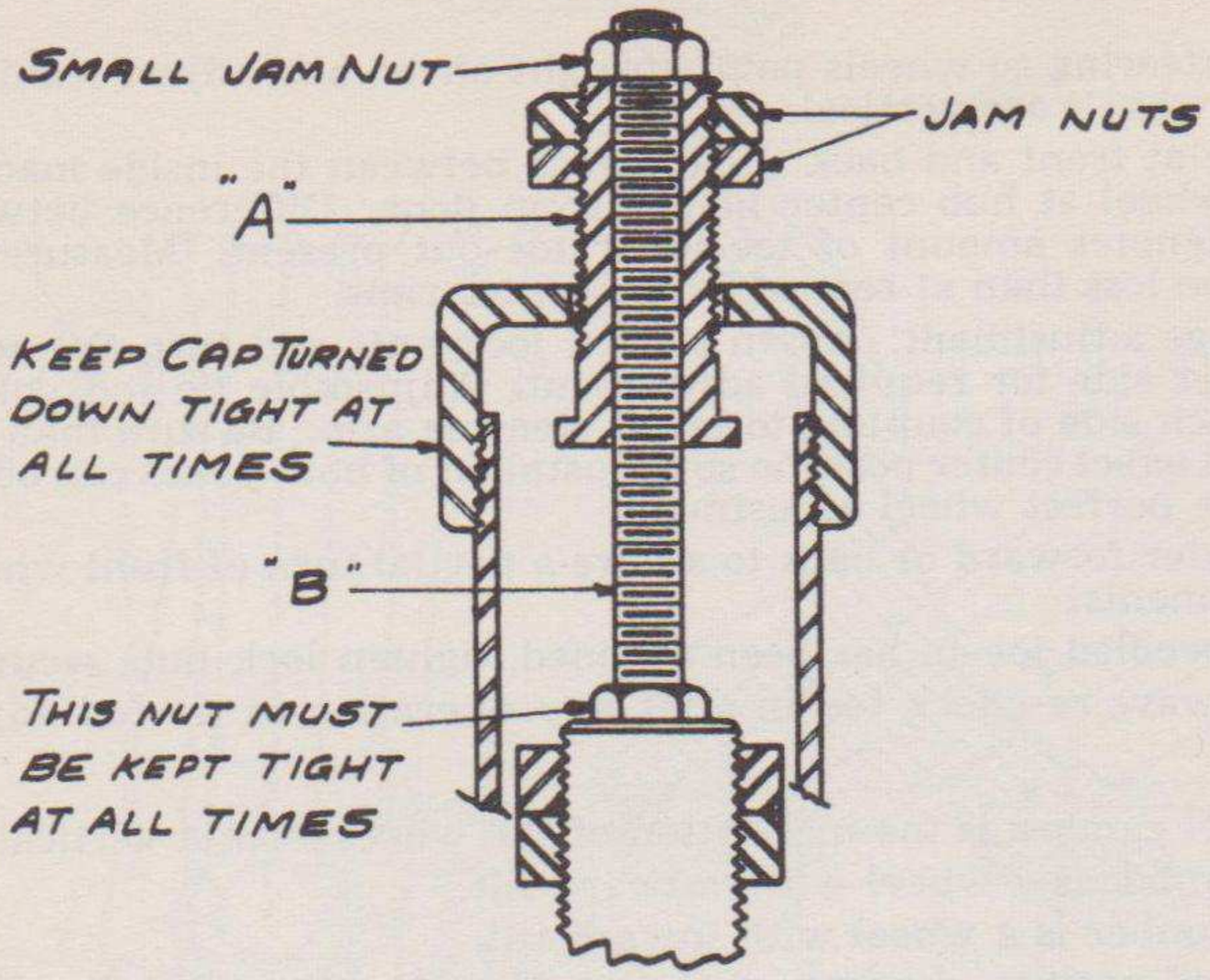

Fig. 2

to piston rod. Turn shaft until steering arm does not contact the piston rod. Pull rod out of the bearings.

To replace the bushings, follow the same steps for removal of shaft after which the old bushings can be pressed out of the casting and new bushings inserted. In placing new bushings in these brackets or castings be sure that the lubrication channel is properly lined up to allow sufficient grease.

When new bushings are installed it may be necessary to use emery cloth and remove a little material to allow the steering shaft to be placed in position through the new bushings and work freely.

Do not overlook greasing both the upper bearings and the lower bearing on the vertical steering shaft and keep all nuts and bolts tight. Grease fittings are provided for proper lubrication as shown in lubrication chart.

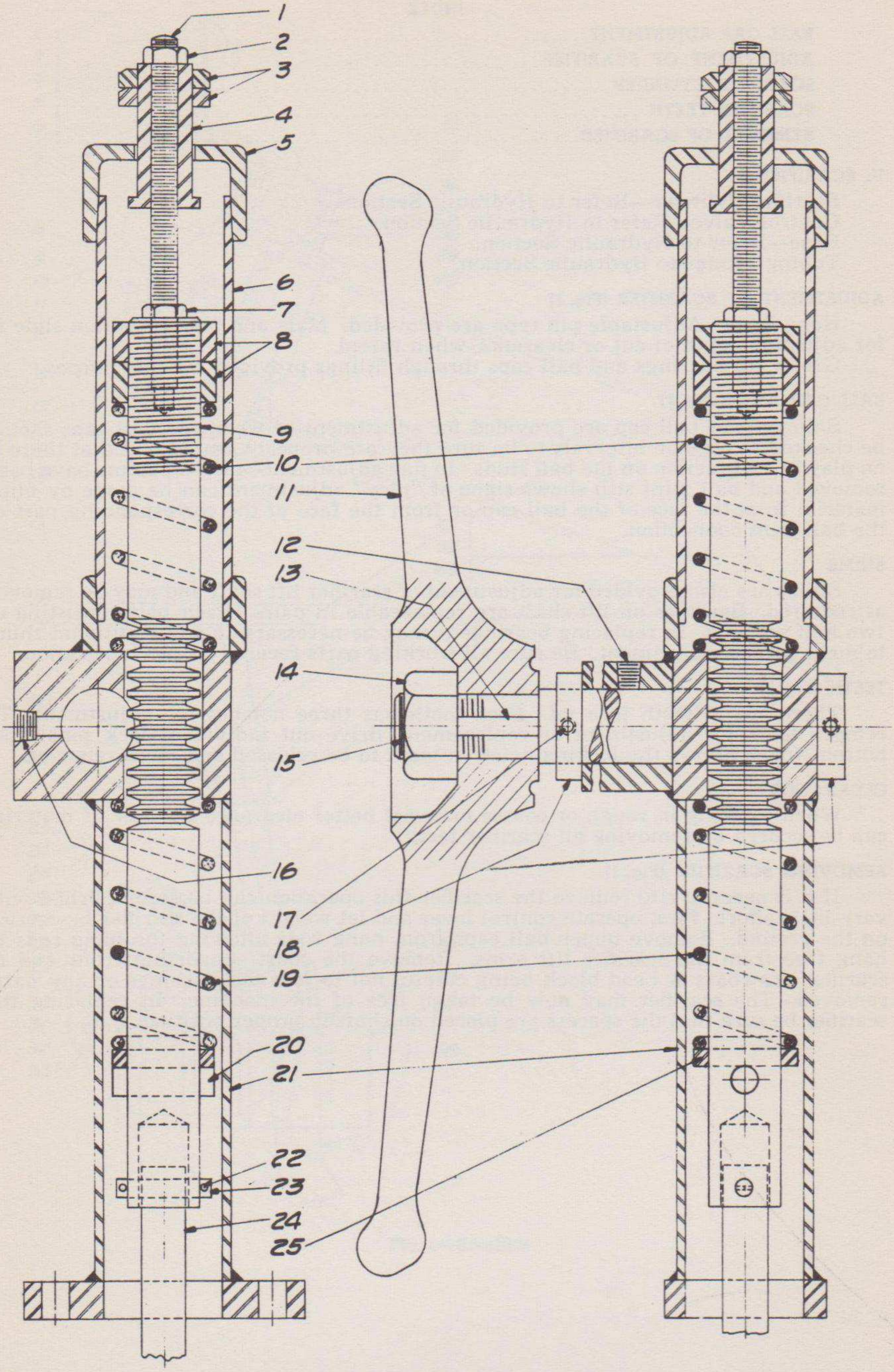

Fig. 3—Steering Wheel and Valve

INDEX

BALL CAP ADJUSTMENT 1
ADJUSTMENT OF SCARIFIER 1
SCARIFIER CYLINDER 1
SCARIFIER TEETH 1
REMOVAL OF SCARIFIER 1

V. SCARIFIER

Scarifier Cylinder—Refer to Hydraulic Section.
Control Valve—Refer to Hydraulic Section.
Hose—Refer to Hydraulic Section.
Tubing—Refer to Hydraulic Section.

ADJUSTMENT OF SCARIFIER (Fig. 1)

Hang Rods—Adjustable pin type are provided. Male and female section slide fit for adjusting depth of cut or clearance when raised.

Grease all bearings and ball caps through fittings provided for this purpose.

BALL CAP ADJUSTMENT

Shims under ball cap are provided for adjustment of wear and ball caps should be checked at regular intervals to be sure they are properly seated and that there is no play in their action on the ball studs. In fine adjustment—or if all shims have been removed and ball joint still shows signs of "play" adjustment can be made by filing material from the face of the ball cap or from the face of the corresponding part of the ball joint connection.

SHIMS

Shims are also provided for adjustment of scarifier lift shaft and may be removed as required. Bearings on lift shaft are replaceable in pairs. Each pair consisting of two half sections. In replacing bearings it may be necessary to add additional shims to make proper adjustment. Be sure all working parts receive proper lubrication.

TEETH (Fig. 1)

There are 11 teeth to a set. Each tooth has three notches for adjustment. To remove teeth for adjustment or replacement, drive out individual lock pins from bottom which allows the locking notch in tooth to be released and tooth removed.

CLEARANCE

When working in rough or coarse material better clearance for flow of material can be secured by removing all scarifier teeth.

REMOVING SCARIFIER (Fig. 1)

If it is necessary to remove the scarifier this operation can be accomplished with very little effort. First operate control lever and let weight of the scarifier be carried on the ground. Remove upper ball caps from hang rods allowing the hang rods to hang free from the scarifier lift arms. Remove the shaft supporting front end of scarifier drawbars at head block being careful not to lose the bushings or any parts removed. The scarifier may now be taken free of the machine. In replacing the scarifier be sure that the spacers are placed on shaft in proper position.

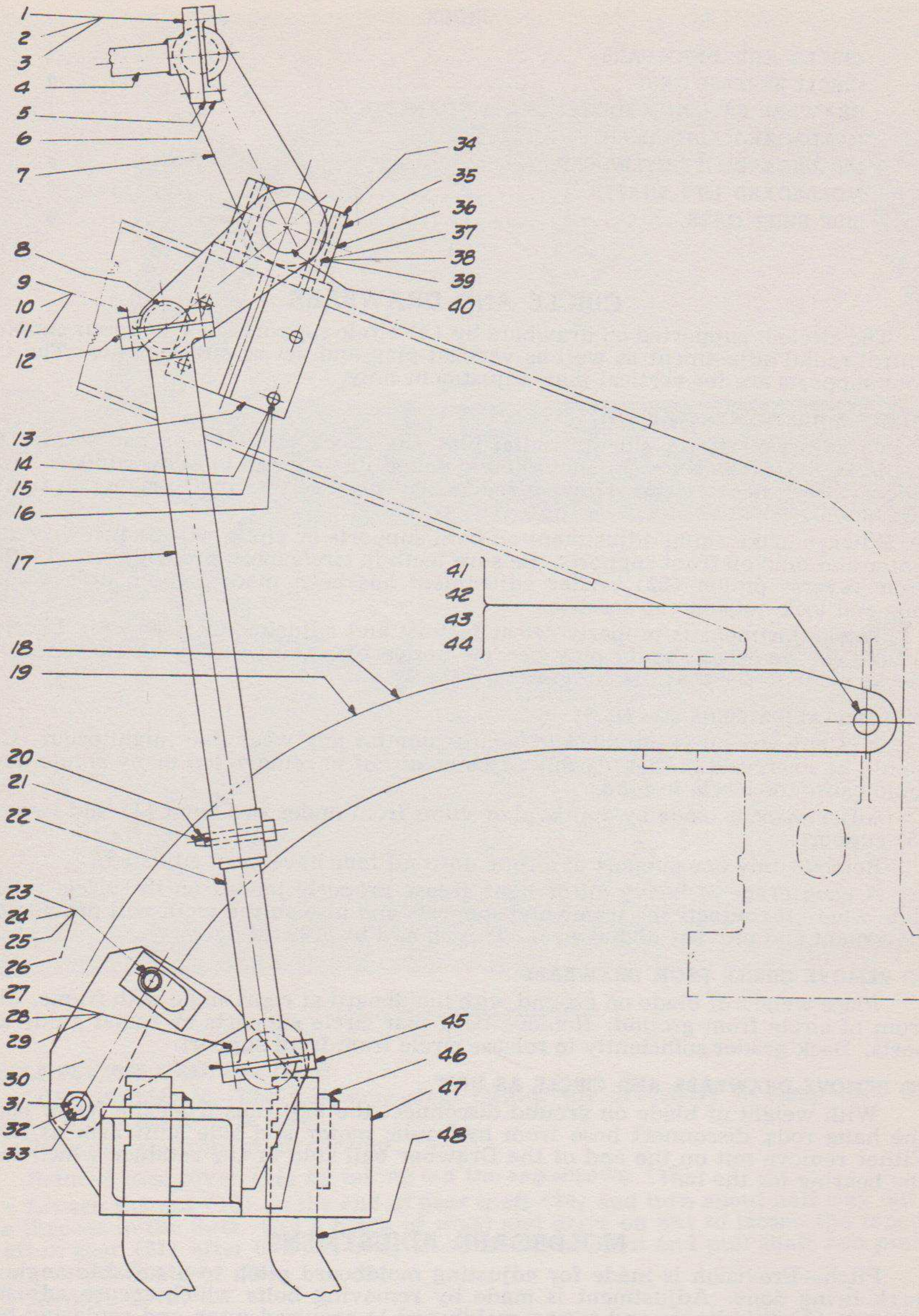

Fig. 1—Scarifier

INDEX

CIRCLE AND DRAWBARS 1
CIRCLE REVERSE CASE 2
DRAWBAR BALL AND SOCKET DRAFT CONNECTION 1
MOLDBOARD ADJUSTMENT 1
MOLDBOARD LIFT CYLINDERS 8
MOLDBOARD LIFT SHAFTS 6
SIDE SHIFT CASE 4

CIRCLE AND DRAWBARS

The circle is supported on drawbars by (4) circle supports. The two rear supports control radial adjustment as well as vertical play and act as circle guides. The two front supports are for vertical play adjustment only.

RADIAL ADJUSTMENT (See Fig. 1)

To adjust circle for side or radial play the check nuts (6) on cap screws (7) should be loosened. Nuts (8) should be loosened just enough to allow support (5) to slide as adjustment on cap screws is made. Turn cap screws in (to right) to tighten adjustment.

Always make equal adjustment on both supports or circle will be thrown out of center and bind on front supports. Be sure teeth in circle mesh properly with teeth in circle reverse pinion (22). After adjustment has been made tighten nuts holding shoe and lock nuts on cap screws.

This adjustment is properly set at factory and adjustments need only be made to take care of wear should play become noticeable. Care should be exercised and checks made to see that the circle rotates freely.

VERTICAL ADJUSTMENT (See Fig. 1)

This adjustment is provided to compensate for any wear that might occur. Care should be exercised in making this adjustment not to remove too many shims which could cause the circle to bind.

Adjustment is made by approval of shims from under two front (1) and two rear (5) supports.

Remove only one support at a time until all four have been adjusted.

A good grade of heavy oil or light grease properly placed on the circle reverse slide where it contacts the frame and supports and also on the teeth will provide free movement and prevent undue wear. This should be greased daily.

TO REMOVE CIRCLE FROM DRAWBARS

Place weight of blade on ground with moldboard at right angle with frame. Block front of circle from ground. Remove both rear circle supports or radial guide supports. Back grader sufficiently to release circle from front support.

TO REMOVE DRAWBARS AND CIRCLE AS UNIT

With weight of blade on ground disconnect the ball caps from the lower end of the hang rods, disconnect hose from hydraulic motor and side shift arm as above. Either remove nut on the end of the Drawbar ball stud or the retainer which forms the bearing for the ball

MOLDBOARD ADJUSTMENT

Pitch—Provision is made for adjusting moldboard pitch to a suitable angle for work being done. Adjustment is made by removing bolts which secure adjusting brackets to circle knees and tilting moldboard to required pitch and replacing bolts in hole selected in the adjusting bracket. See Figure 2, Item 1.

Lateral adjustment—for extreme reach on wide shoulder cuts or on high banks the moldboard may be shifted to any set of attaching lugs provided for this purpose.

DRAWBAR BALL AND SOCKET DRAFT CONNECTION (See Fig. 3)

This is the front connection of drawbar to frame head block of grader. Shims (6) are provided for taking up any wear incident to service. Nuts (2) on the threaded end of the ball stud (3) should be kept tight at all times. Lubricate this connection through fittings (4).

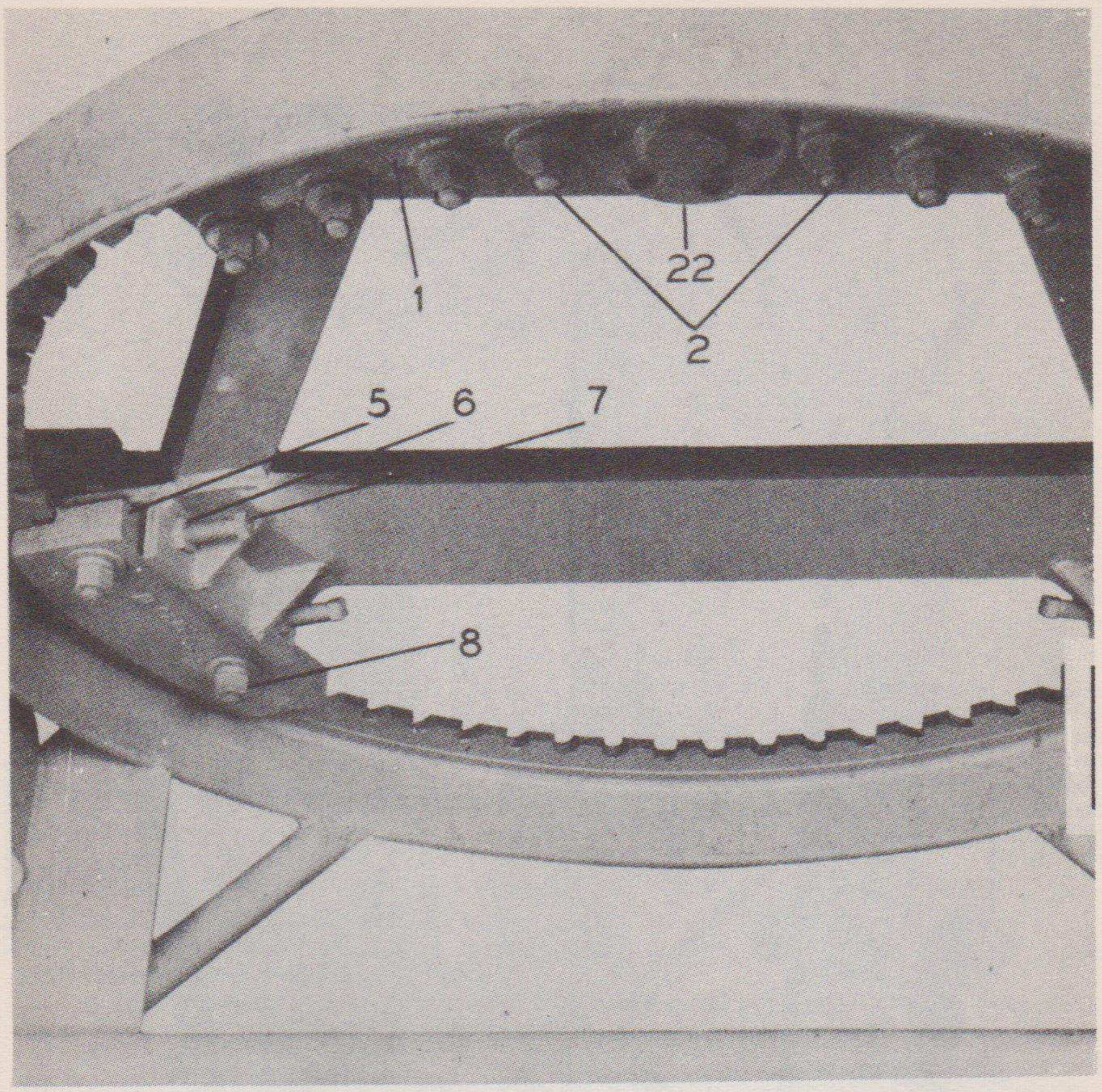

Fig. 1—Circle Adjustment

CIRCLE REVERSE CASE (See Fig. 4)

DISASSEMBLY—The following steps outline the procedure to completely dismantle the circle reverse case.

Remove case from grader frame.

Remove case cover (14) by taking out the cap screws. (18)

Loosen the nut (16) on the end of gear shaft (24) and turn about half way out of the threads in the nuts. Use a block of wood and drive on nut to loosen the tapered shaft in gear (21) after this has been loosened remove nut and pull shaft and pinion from assembly as one unit.

Remove Gear.

To remove the worm (7) first remove collar (13) on end of shaft (2) and drive shaft out of worm and case toward end of shaft on which universal (1) is attached.

If bushings are to be removed the regular procedure of pressing or driving them out of the housing is recommended.

ASSEMBLY—In assembling the circle reverse gear case the above procedure in reverse is used. Being sure that all keys are in place and properly aligned to the proper location in the corresponding part. Also be sure that the thrust bearings (6 and 9) are in place. Before cover is replaced pack unit in grease and thoroughly tighten all nuts and insert cotter pins where required.

990620 O—52——16

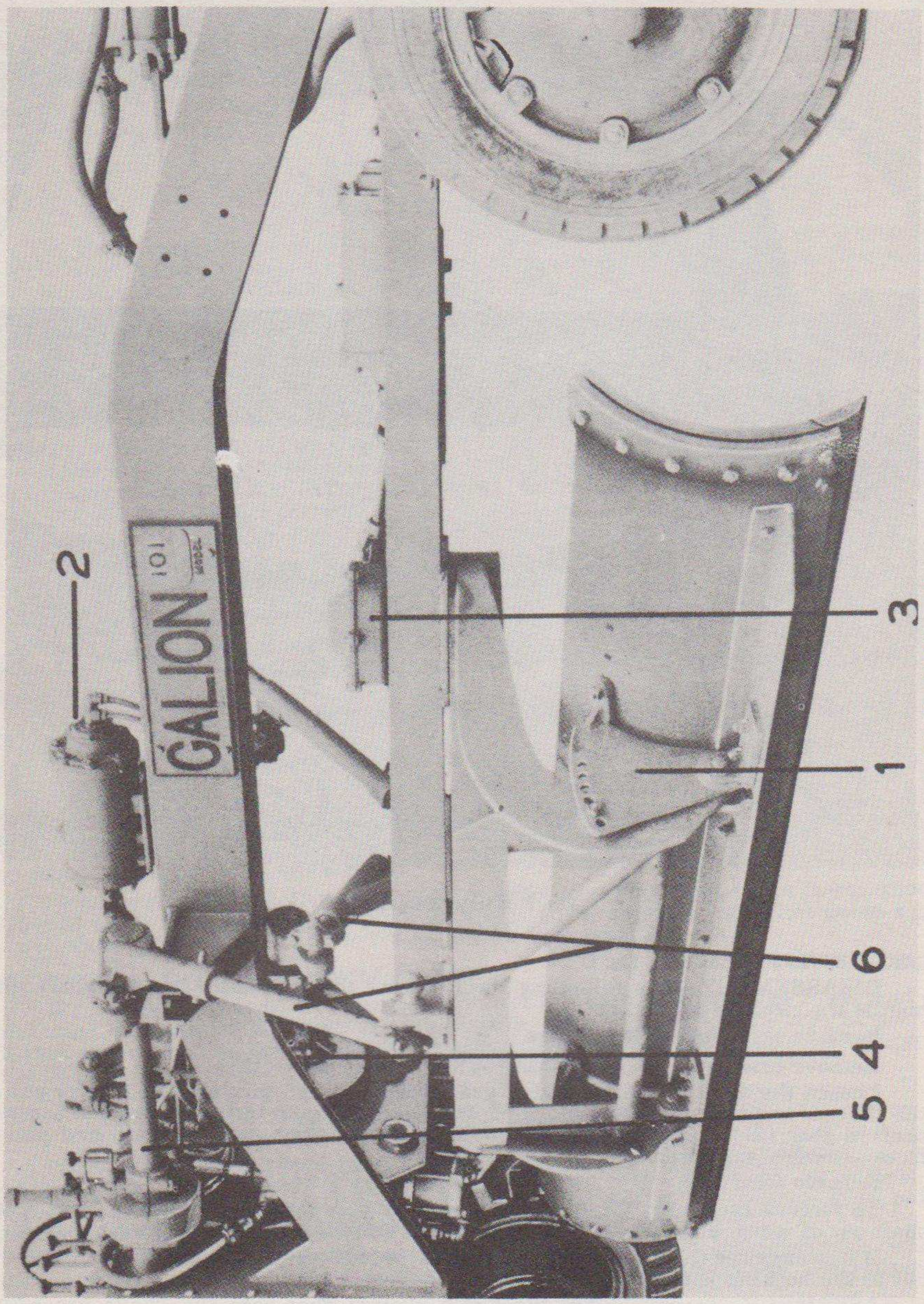

Fig. 2—Moldboard

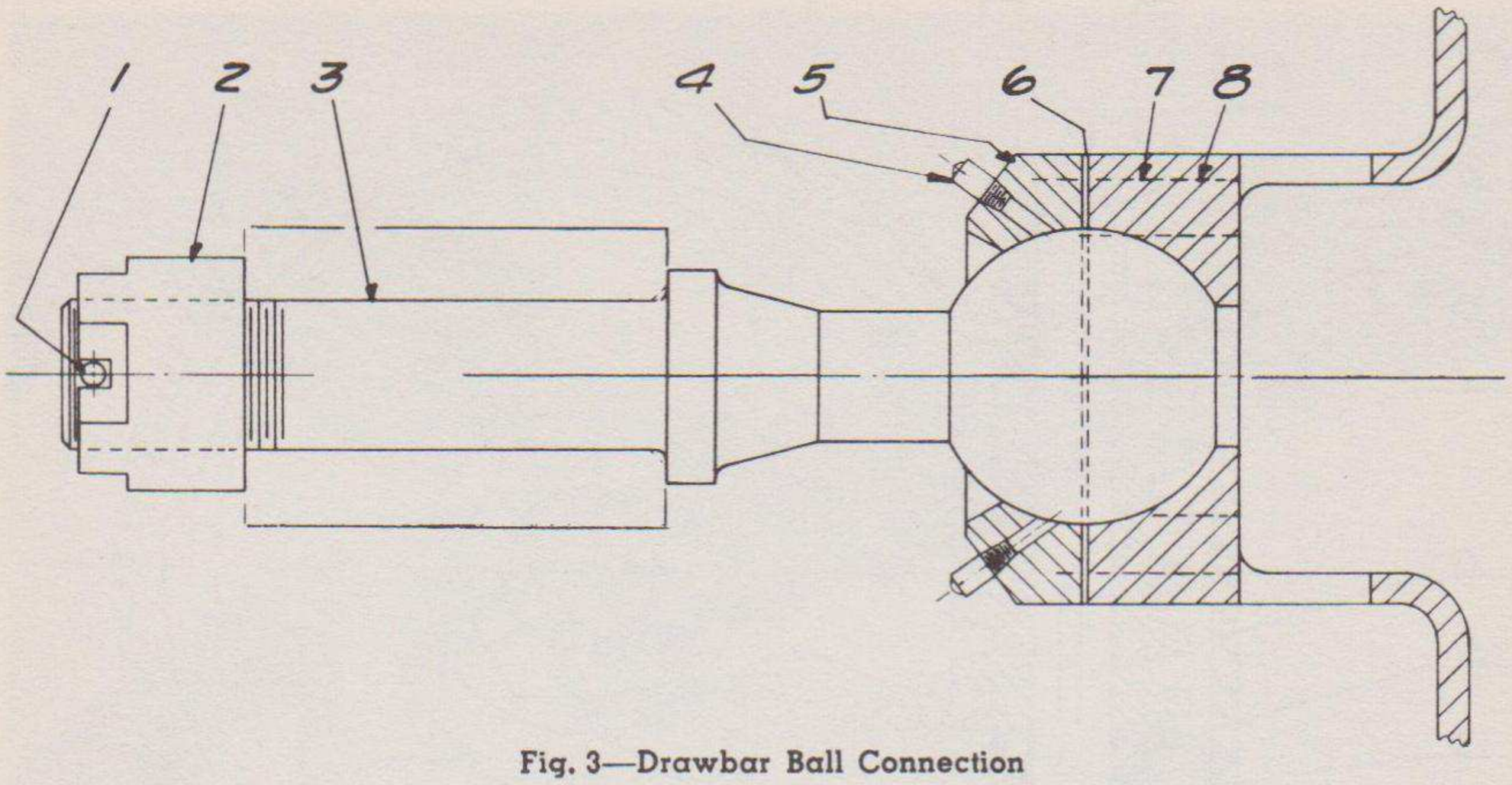

Fig. 3—Drawbar Ball Connection

SIDE SHIFT CASE (See Figures 5, 6 and 7)

Removing Side Shift Case From Grader

Disconnect side shift hang rod from ball stud by removing ball cap, Figure 5. Disconnect universal joints (55), Figure 6, from worm shaft at drive reduction case. Remove cap screws in retainer (45) and turn worm and shaft (36) to right and remove one top cap screw (33) and thread cap screw through a link of one chain from hoist and replace. Hook on other chain from hoist to be secured in drive reduction case (38). It is necessary that hoist chains be long enough to permit lowering side shift assembly to floor or ground level for removal clearance under grader frame and to prevent chains doing damage to copper hyd. lines (56). Tighten hoist chains to support weight when bolts (54 and 43), Figure 5, are removed. Remove bolts (54 and 43) holding side shift case to frame and lower from frame of grader.

Disassembly of Side Shift Case (Fig. 7)

Remove worm and shaft (36) through retainer end of drive reduction case, being sure the spacers (40) also are removed.

Remove Cover (16) from case after which remove nut (19) and pull gear (39). Remove cap screws (21) holding small drive reduction case and remove case (38).

Remove large gear case cover (3) remove nut (2) on shaft (13) and drive shaft from gear (10) in removing be sure not to spoil the threads on shaft (13).

Remove gear (10). Remove retainer (32) which will allow the drive worm (8) and shaft (9) to be driven back in case from retainer end far enough to be removed through large opening in gear case.

Assembly of Side Shift Case (Fig. 7)

All of the bushings in the gear case assembly can be replaced by pressing old bushings from assembly and inserting new bushings in the same manner. In replacing shaft and arm (13) the one collar (12) must be welded in place after the case is completely assembled, the other collar should be welded in place after the case is placed on the grader and tightened to frame. These collars act as spacer washers for end thrust on the large gear. To assemble case place collars, worm and keys on shaft (9) as shown. Place bearing cone (24 and 31) on shaft as indicated. Place assembly of above parts in case through large opening of gear case with threaded end of shaft going through opening where reduction gear case attaches. Put bearing cups (23 and 29) in place being careful not to shove them through opening in case as there is no shoulder in this case, these bearings must slide in the case for adjustment. Place bushing (22) in drive reduction case (38) and assemble on large case (6) and tighten securely by cap screws (21). Place retainer (32) in place with shims and tighten capscrews (33) securely. Try turning the worm to be sure the bearings are properly adjusted, take out or add shims to make the proper adjustment. Put gear (39) on shaft (9) being sure key is in place. Put nut (19) on shaft. Do not tighten this nut securely but draw it up snug. This nut is a retainer for the gear only and is not to be tightened as the gear must form its alignment with the worm. Place worm and shaft (36) in drive reduction gear case from retainer end being sure washers (40) are in place. Assemble retainer (45) in position as shown and tighten

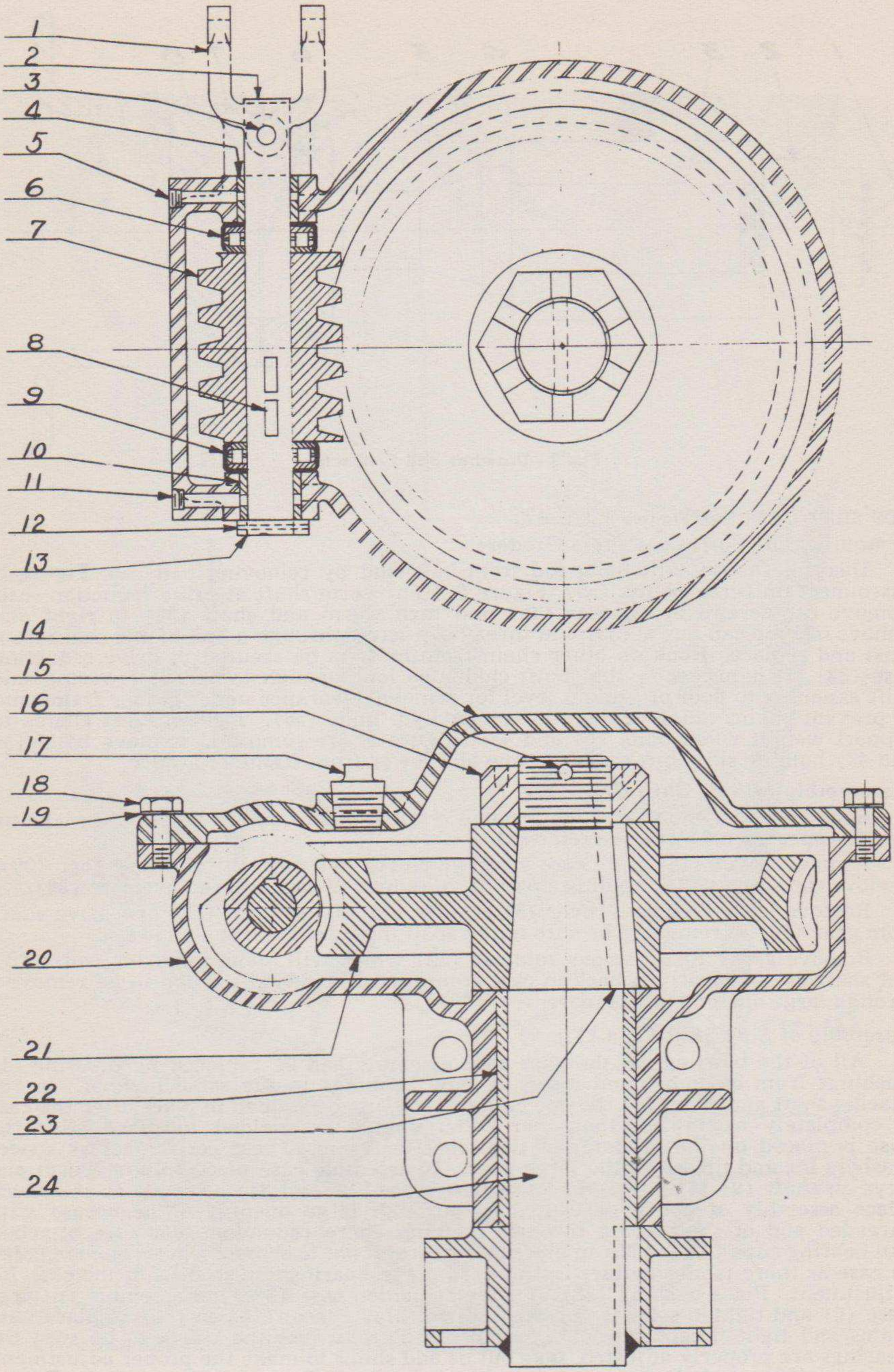

Fig. 4—Circle Reverse Case

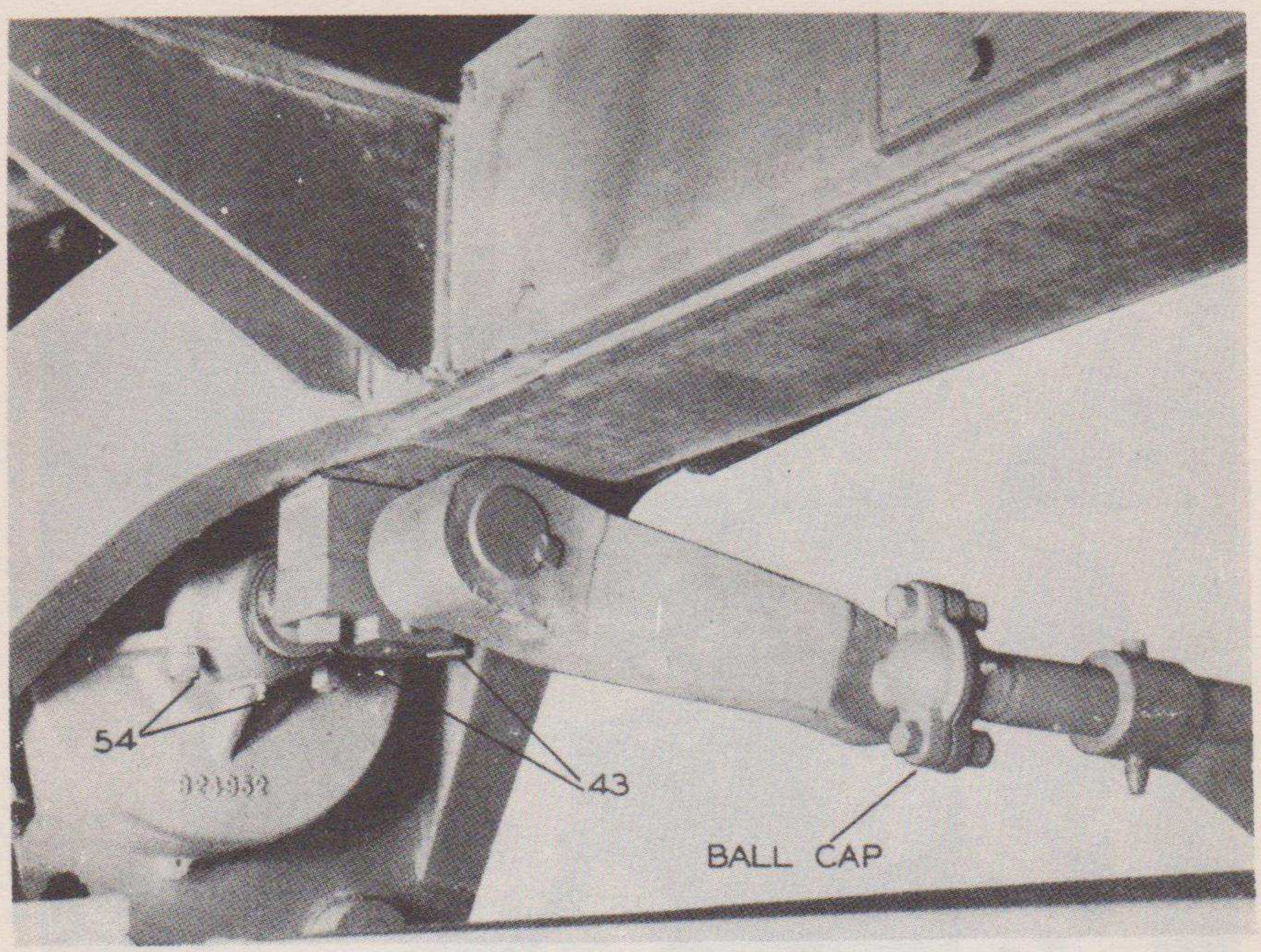

Fig. 5—Side Shift

cap screws (46) securely. Pack drive reduction gear case assembly in grease and put on cover (16). Place large gear (10) in case with key (34) in place in shaft (13) put shaft through case and drive into gear being sure that the two collars (12) are on the shaft. Put nut (2) on shaft and tighten securely and put cotter pin in place. Check to be sure the teeth of the gear are meshing properly with the worm (8) and keep the back side of the gear tight against the case. Pack large case in grease and put cover (3) in place. The front bearing (42) is adjusted by addition or removal of shims as required.

MOLDBOAD LIFT SHAFTS (See Figures 8 and 9)

Bearings (1 and 22) on the lift shafts (19) are removable bronze bushings and can be replaced by pressing old bushings from brackets and installing new ones. The lift shafts can be removed by disconnecting piston rod from turret arm (6) and hang rod from lift arm (26) after which the front bearing bolts (23) must be removed and the shaft can be pulled from rear bearing. The indexing turret consists of two side plates held fast to the shaft by keys, lock screws and clamp bolts. The lift arm which forms the center section of the indexing turret is free on the shaft and can be rotated when the lock pin is removed. This adjustment is made for certain operating positions of the moldboard. The left hand turret is locked with a machine bolt and lock pin as the left indexing turret need not be moved for bank cutting to the right for which the machine is set. In replacing the shaft or parts be sure the collar (20) is tightened in place as this forms a thrust bearing along with the rear section of the indexing turret to avoid end thrust in the lift shaft.

The two moldboard hand rods as well as the side shift hand rod have holes for adjustment of the machine when it is necessary to extend the blade for bank cutting and also for shifting the moldboard to either side of the machine for berm work. The adjustment is made by removing the pin in the hang rod and replacing in the hole required.

All ball caps on these hang rods are adjustable by removal or addition of shims as required and should be kept tight to avoid shock on the ball and socket connections.

All working parts should be lubricated regularly and grease fittings are provided for this operation.

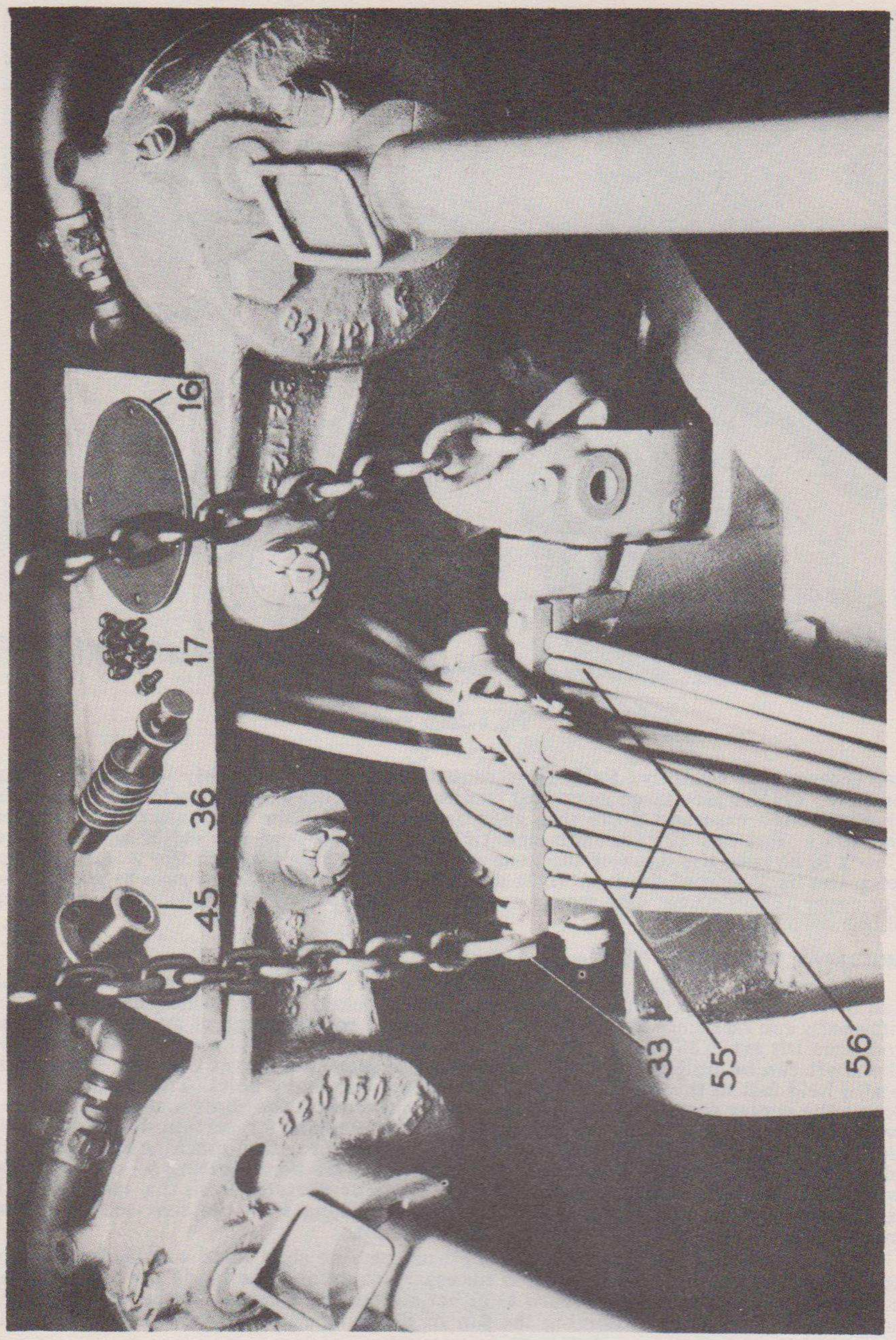

Fig. 6—Side Shift—Removal of Case

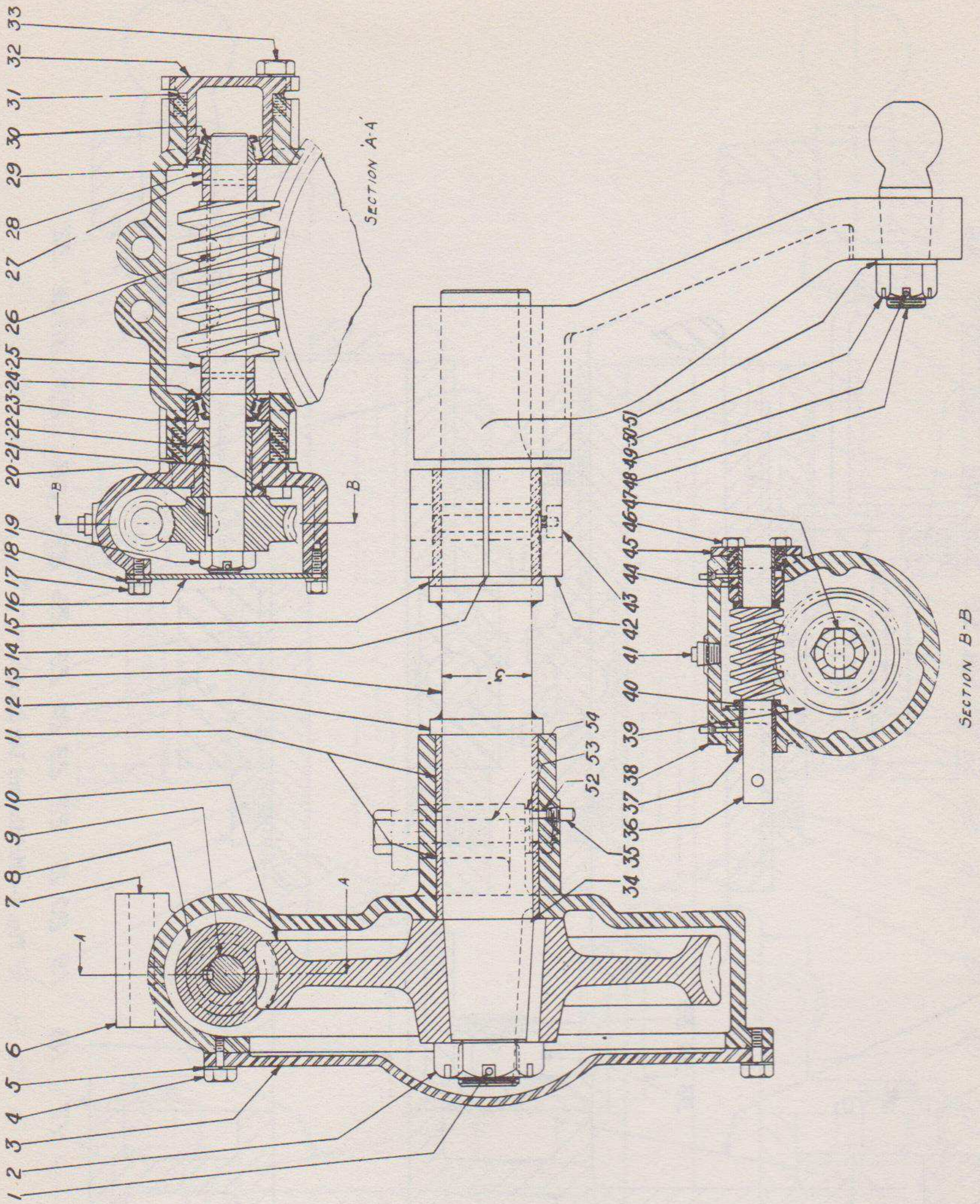

Fig. 7—Side Shift Case

MOLDBOARD LIFT CYLINDERS

The moldboard cylinders are assembled right and left and in taking any of the cylinders apart they should be marked with proper location of all parts for re-assembly. The lift cylinders are removed by removing the stub shafts which support the cylinder. There are two of these shafts to each of the moldboard cylinders and the shafts are drilled for bolts to be inserted for the purpose of pulling the shaft. The bronze bushings in the cylinder brackets may be replaced. In removing any cylinder be sure to disconnect the hose and ball joint on the piston rod.

The bracket on the lift cylinders is welded to the draw studs 4¼" from the lower head.

Be sure the bushings are greased on the lift cylinders through the grease fittings provided.

Cylinder assembly and disassembly, see Hydraulic Section.

Hose and fittings, see Hydraulic Section.

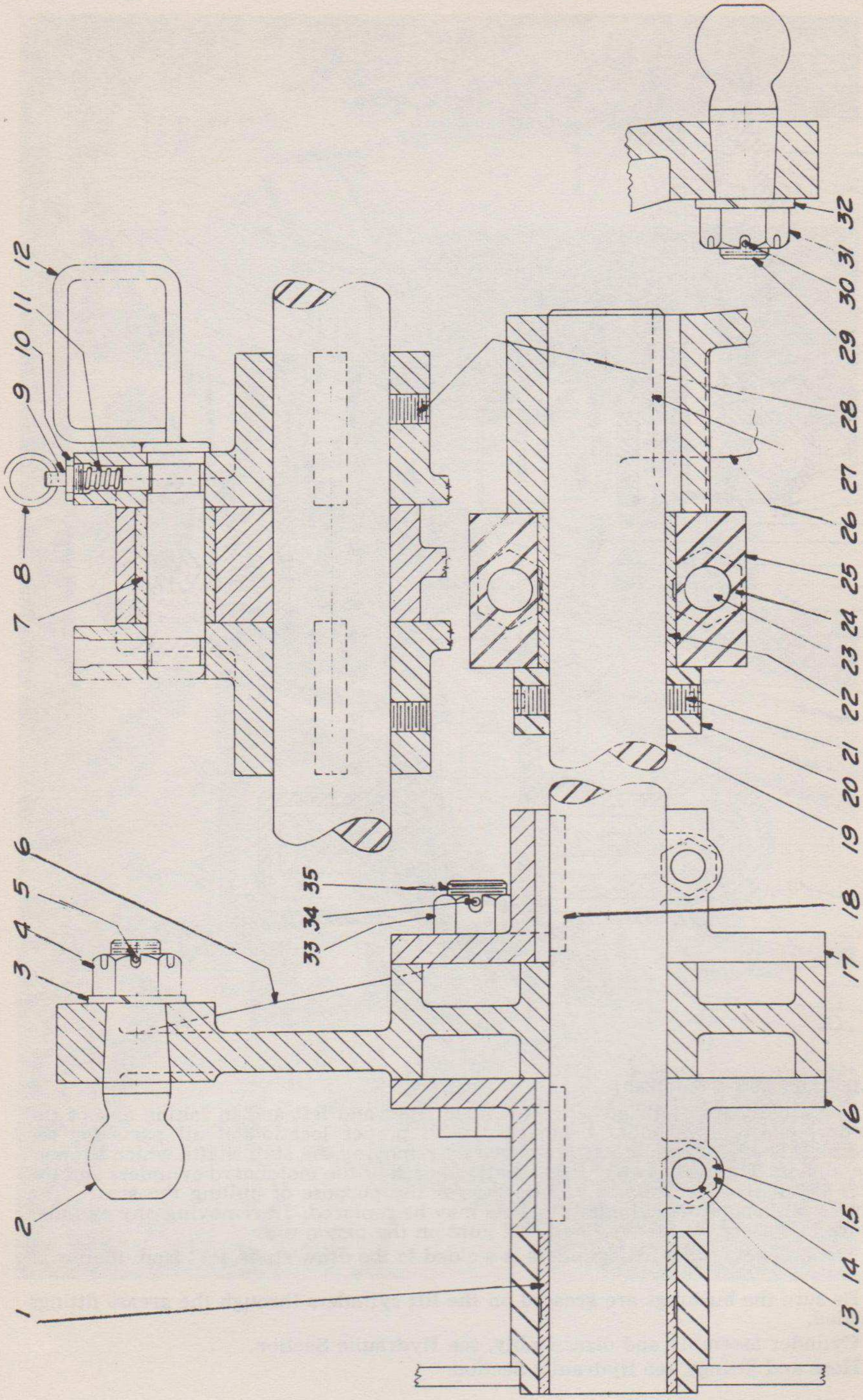

Fig. 8—Moldboard Lift Shaft

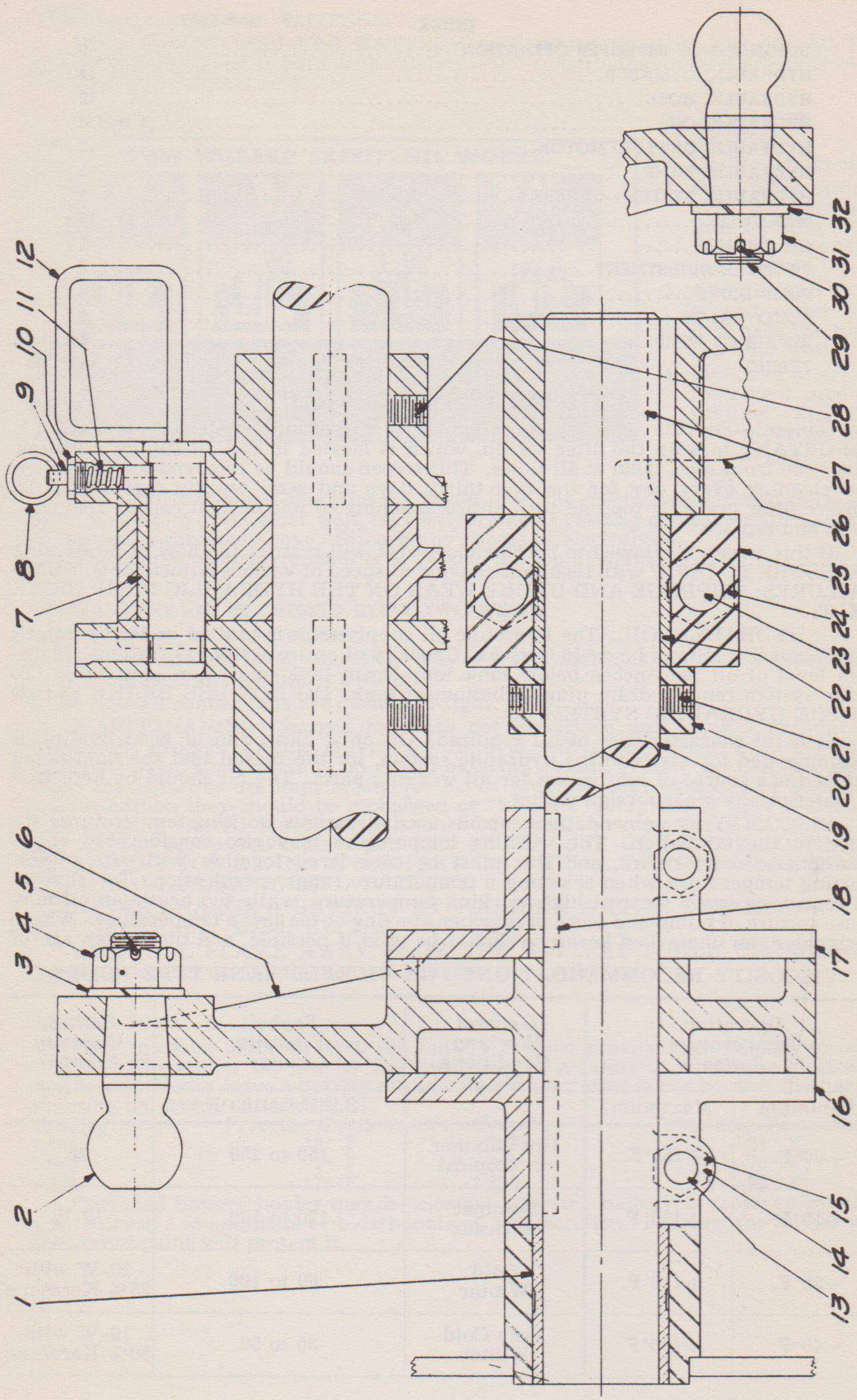

Fig. 9—Moldboard Lift Shaft

INDEX

DIAGNOSIS OF IMPROPER OPERATION 9
HYDRAULIC CYLINDER 13
HYDRAULIC HOSE 12
HYDRAULIC OIL ..... 1 and 2
HYDRAULIC OR FLUID MOTOR 13
HYDRAULIC PUMP 5
HYDRAULIC SYSTEM—GENERAL 1
MANIFOLD 10
OIL CHANGE 2
PRESSURE ADJUSTMENT 4
PUMP DRIVE 4
RELIEF VALVE 3
REPAIR OF PUMP 6
TUBING 12

HYDRAULIC SYSTEM (Fig. 1)

General—For the efficient operation of the hydraulic system it is HIGHLY IMPORTANT to keep the filter screen, which is located in the oil supply reservoir under the front seat, clean at all times. This screen should be removed for inspection and cleaning every day for the first thirty days and semi weekly thereafter. To remove filter grasp by top and turn entire assembly to left until it can be removed, clean and replace.

If this screen is allowed to become clogged it will restrict the flow of oil causing PRESSURE TO DROP with resultant slowing of speed of various adjustments; PUMP FAILURES; SLIPPAGE AND UNDUE WEAR ON THE HYDRAULIC PUMP DRIVE BELT.

HYDRAULIC OIL: The hydraulic oil supply tank is located under operator's seat. Capacity of tank being 10 Gallons. Capacity of entire system 17 Gallons. Maintain level of oil two inches below tank top. Drain tank and clean seasonally. To drain system remove drain plug in bottom of tank. DO NOT USE BRAKE FLUID IN THE HYDRAULIC SYSTEM.

General characteristics of oil required. Oil only, clean and of good quality, is recommended for use with the hydraulic system, for the reason that the fluid being pumped is a source of lubrication for all working parts. The oil should be kept free of water or any other foreign matter.

VISCOSITY recommendations for oils used at various working temperatures are listed in the tabulation. The working temperature may rise considerably above atmospheric temperature, and this must be considered together with the coldest starting temperature when selecting a temperature range specification. Too thin an oil causes excessive wear at high working temperature, while too heavy an oil may cause seizure of pump and score parts when starting at too low a temperature. Where designated, an uncracked kerosene should be used if possible, and the percentage of

VISCOSITY RECOMMENDATIONS FOR VICKERS VANE TYPE PUMPS

Operating Temperature Range		*General Working Conditions*	*Saybolt Viscosity Range*	*S. A. E. Viscosity Number*
Minimum	*Maximum*		(S.S.U. at 100°F.)	
+60°F.	+155°F.	Hot Summer or Tropical	150 to 250	20
+15°F.	+135°F.	Summer or Inside	120 to 180	10-W
−25°F.	+110°F.	Cold Winter	60 to 100	10-W with 25% Kerosene
−40°F.	+100°F.	Very Cold Winter	35 to 50	10-W with 50% Kerosene

kerosene kept as low as consistent with the recommendations given in the chart. It should be remembered that kerosene will evaporate out of oil-kerosene mixtures at high operating temperatures.

POUR POINT specifications of oils must be approximately 25° to 30° below the minimum temperature at which the pump is expected to operate. Thus, if it is expected that an oil pump is to be started into operation at zero temperature, a pour point of —25° to —30° should be specified.

STEAM EMULSION specifications of 125 seconds minimum (A.S.T.M.) for complete separation will insure an oil which has negative water affinity characteristics.

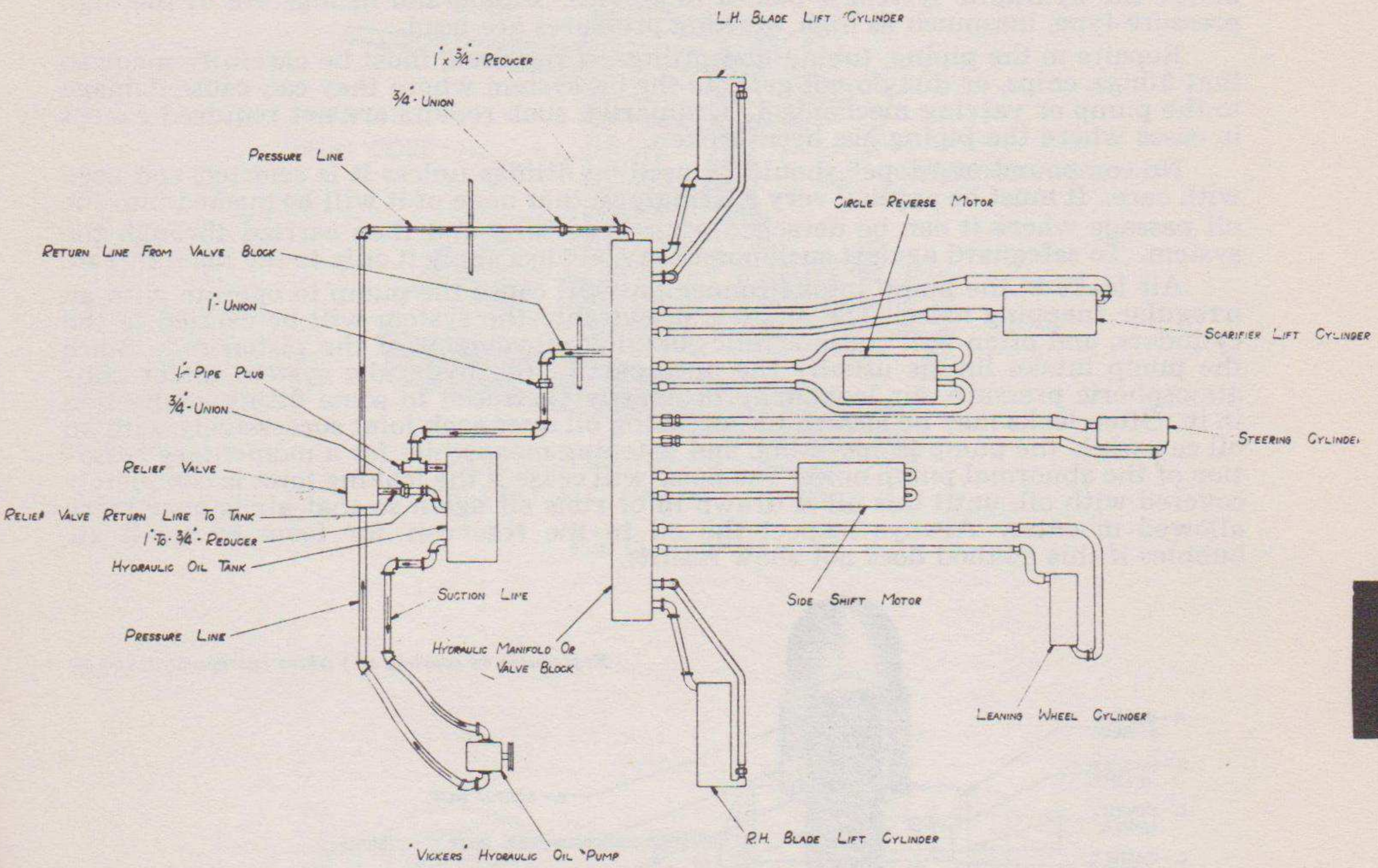

Fig. 1—Hydraulic System

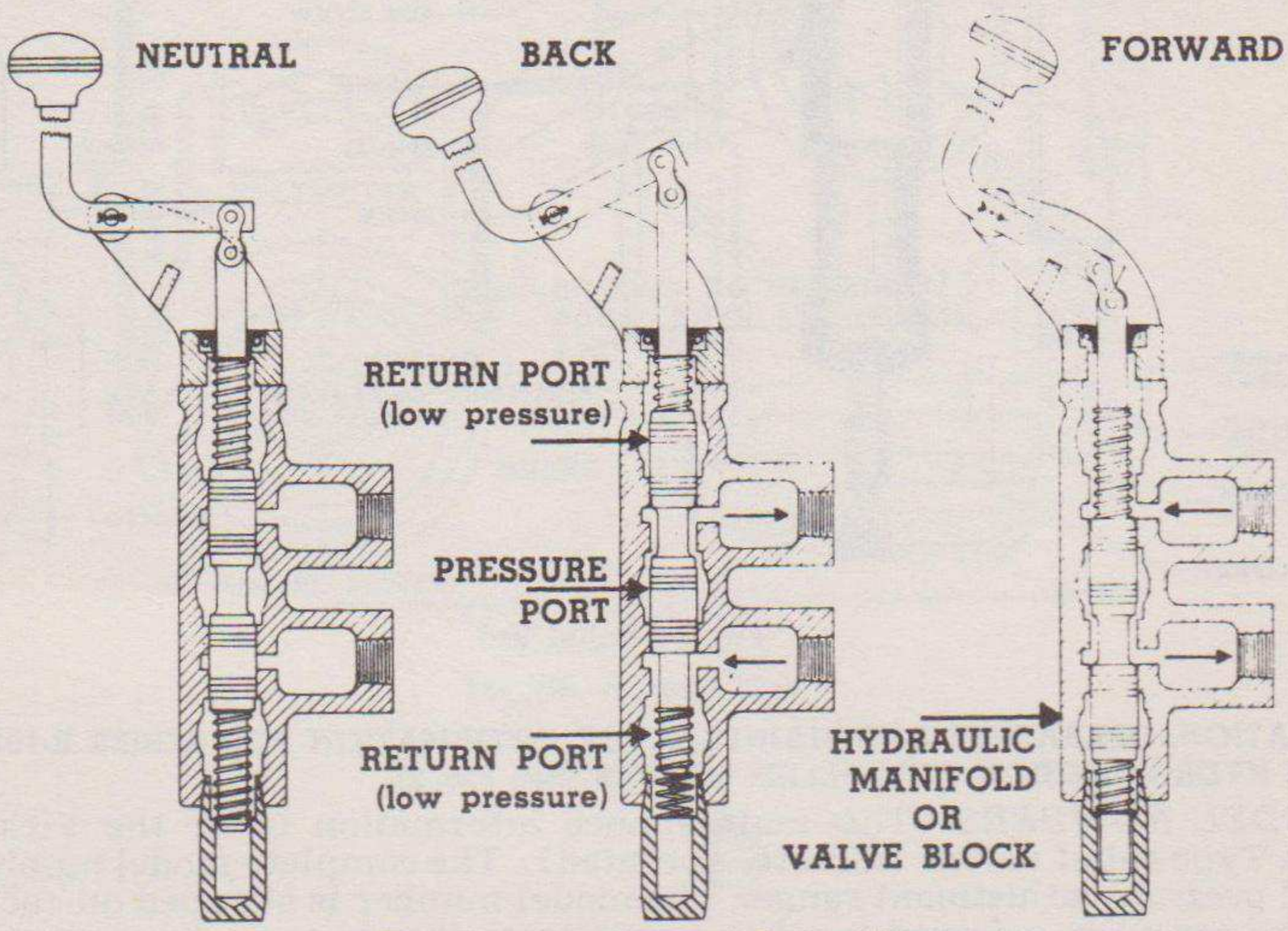

Fig. 1A—Operation of Control Levers.

This specification determines the resistance of an oil to absorption of condensation water. Oil with a low steam emulsion specification is desirable, as foaming and seration will then be reduced to a minimum.

OIL CHANGES REQUIRED. We recommend changing oil in the hydraulic system seasonally and oil changes need not be frequent if proper oils are used and if precautions as outlined are taken into consideration. Inspection should be made at intervals to determine whether water, sludge or sediment are present.

Piping, tubing and fittings do not require special attention although we can suggest that they be inspected for being tight, and that all connections are clean before the hydraulic system is placed in service. Piping and fittings are of the high pressure type, inasmuch as high working pressures are used.

Repairs to the piping, tubing and fittings, if required, must be carefully made so that filings, chips, or dirt do not get into the oil system where they can cause damage to the pump or valving mechanism. Ordinarily, such repairs are not required except in cases where the piping has been broken.

No compound or "dope" should be used on fittings unless it is selected and used with care. It must be applied very sparingly so that none of it will be pushed into the oil passage where it can be detached after hardening and then carried through the system. To safeguard against such possibility, always apply it only to the male thread.

Air leaks in the pump intake connection will cause the pump to operate with an irregular snapping noise. The air thus drawn into the system will be carried to the cylinders, and often will cause erratic jumping movements of the piston rod. Since the pump intake line is usually the only part of the hydraulic system under subatmospheric pressure, air leaks may ordinarily be traced to some fitting connection in it. Often leaks may be located by spreading oil over each joint successively with an oil can while the pump is operating, and listening meanwhile for a momentary cessation of the abnormal pump noise. The noise will cease if the leaking joint is completely covered with oil, until this oil is drawn in or runs off again so that air is once more allowed to enter. Always inspect the oil in the reservoir for foam or small air bubbles if this method does not show results.

Reproduced by courtesy of Vickers Incorporated, Detroit

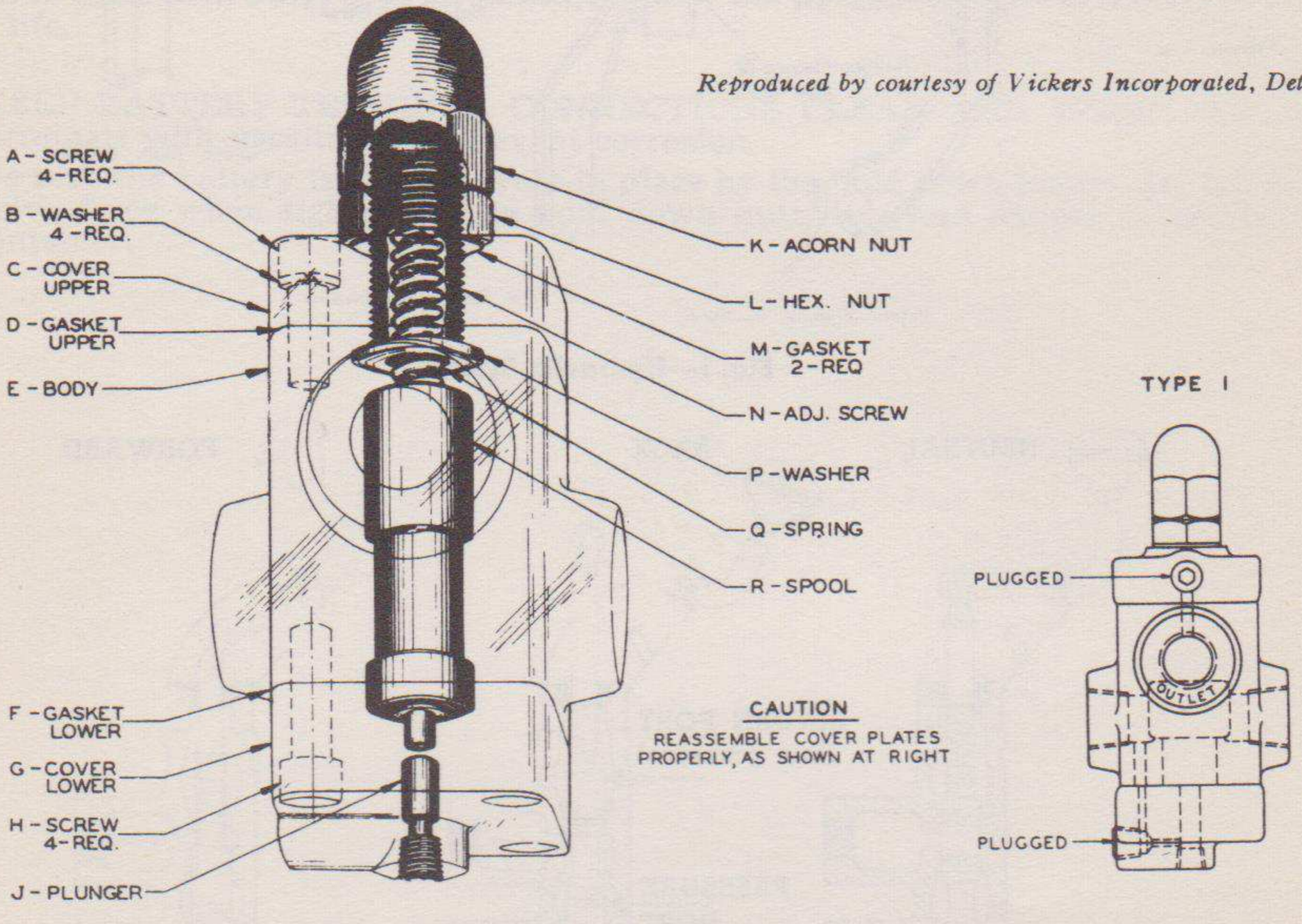

Fig. 2—Relief Va'

INSTALLATION, OPERATION AND MAINTENANCE INFORMATION FOR SERIES R-106-B-11, VICKERS HYDRO-CUSHION TYPE RELIEF VALVES (See Fig. 2)

MODEL NUMBERS—This maintenance information is for the Vickers Hydro-Cushion Type relief valves (direct operated). The complete model number indicates size and pressure adjustment range. The model number is stamped on each valve and should be carefully referred to when using parts drawing or when ordering parts.

FUNCTION—The primary function of these valves is to limit the maximum operating pressure in the hydraulic system to any desired adjustable figure within the range of the valve. Oil from the system is discharge from the "return" connection of the valve to the tank whenever pressure builds up to the required setting for which the valve is adjusted. This discharge prevents further build up of pressure, and the valve thus limits the system pressure to the desired maximum.

INSTALLATION—Be certain that the piping from the valve "return" connection discharges oil to the tank *below* the surface of the oil in the tank. This is necessary in order to prevent aeration and foaming.

CAUSES OF IMPROPER OPERATION—Fluctuating pressure or loss of pressure at the relief valve indicates that there is air mixed with the oil or dirt particles in it. Very small chips or filings left in the tubing or piping, wiping cloth lint, core sand, or any such foreign substances can cause trouble. Every possible precaution should be taken to prevent any grit or dirt from entering the system when filling the tank with oil. Also, precautions should be taken to protect the tank air vent opening so that the "breathing" action in the tank does not draw dirt. Abrasive matter will cause pump wear and will prevent the proper operation of control valves.

Small air bubbles often cause a "milky" appearance of the oil, and this air will usually cause noisy pump and relief valve operation, as well as prevent the valve from holding a pressure steadily. Check to make certain that all system return pipes (including drain connections) discharging oil to the tank are well below the oil surface level; also, that no air leaks are present in the pump intake line (refer to pump-maintenance data). Both of these conditions will cause air to be mixed with the oil.

NOTE: Before removing valve drain hydraulic oil tank.

PROCEDURE WHEN SERVICING—The relief valve is sometimes prevented from operating correctly by lint, pipe scale, or some other solid matter lodging between the plunger "J" or spool "R" and the bore in which it operates.

The two valves and covers "C" and "G" may be readily removed by first removing the four screws "A" and "H". Be sure that the valve spool "R" moves freely in the valve bore and also that the plunger "J" moves freely in the end cap.

The small drilled holes in the valve body, the end cap, and the spool should be open and unobstructed.

Before removing the covers "C" and "G", they should be carefully marked so that they are reassembled in the same position with relation to the four sides of the valve body. The small drilled hole in the cover "C" and the body "E" should register.

When reassembling be careful that not the slightest particle or grit is allowed to get on the ground parts. It is desireable to cleanse these with gasoline or kerosene before reassembling.

PRESSURE ADJUSTMENT USING GAUGE—Pressure on system 350 lbs.

The pressure adjusting screw "N" provides a convenient means of regulating the maximum system pressure within the range of the valve model as used on the Galion 101 Motor Grader. A ¼" pipe thread pressure gauge connection is provided at the side of the valve body and may be used for testing purposes, or the gauge may be used at the small pipe plug in the manifold. The acorn nut "K" must first be removed and the lock nut "L" must be loosened before turning the pressure adjusting screw "N". Clockwise rotation of the latter increases pressure while counter-clockwise rotation decreases pressure.

On all applications the pressure relief valve should be set for the minimum possible pressure required to perform the required service. If it is set for excessive pressure, more power will be used than is necessary whenever the valve is being held open.

PRESSURE ADJUSTMENT—WITHOUT USE OF GAUGE

The best way to determine the correct pressure is to lower the moldboard and place it at right angle with the grader, set the pressure to the point where the front wheels start to raise off the ground. This setting is made while exerting downward pressure on the moldboard through both cylinders at the same time.

This adjustment can be made as follows; have someone operate the two blade control valves, forcing the blade down, while you adjust the pressure screw at relief valve. To adjust this screw remove acorn nut, release hex nut "L" and turn the adjusting screw IN to INCREASE the pressure and OUT to LOWER the pressure.

Do not set pressure too high. The above adjustment will be found correct for all work. You cannot operate the grader if there is too much pressure on the system and the front wheels are raised off the ground.

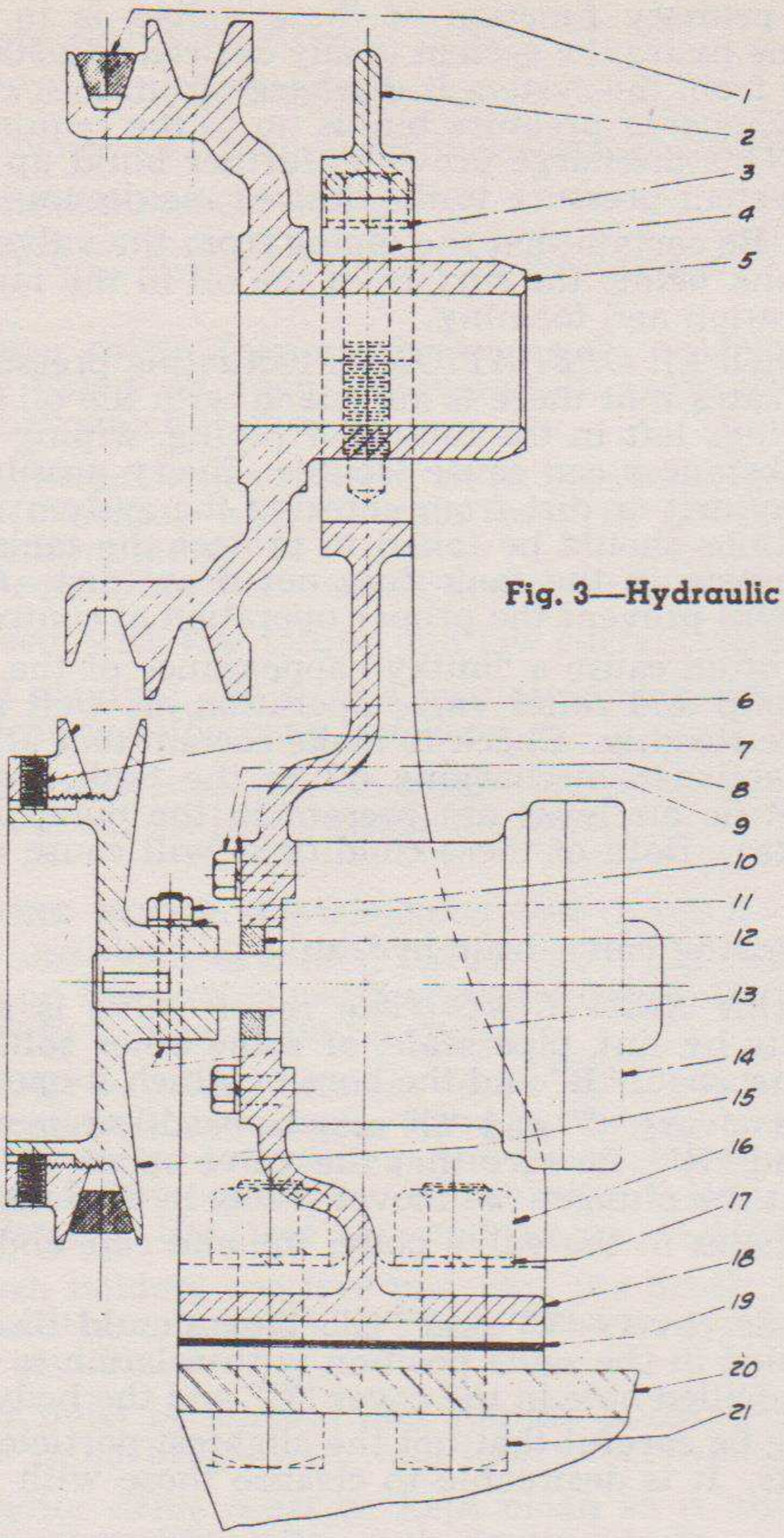

Fig. 3—Hydraulic Pump Drive

HYDRAULIC PUMP DRIVE (See Fig. 3)

The hydraulic pump is belt driven from the crankshaft of the motor and the belt is adjusted by the adjustable flange on the pump pulley. This pulley is in two sections, being threaded to tighten or loosen the belt. To tighten belt, loosen set screws in flange and turn flange to the left. This belt should not be too tight but be sure it does not slip.

HYDRAULIC PUMP (See Fig. 4)

In operation, the slotted rotor is driven by a splined shaft, and vanes in each slot slide radially as the Rotor revolves. Centrifugal force and fluid pressure cause the vanes to follow the inside contour of a hardened and ground ring, which is so shaped that two opposing pumping chambers are formed with side Valve Plate Bushings having ports for intake and exhaust of oil.

Head take up screws must not be tampered with except when tearing down pump and reassembling. As no adjustments are necessary. The head screws are correctly adjusted at the factory under actual operation, and should they be tightened the pump may be caused to seize due to internal binding action. (The clearance opening around the pump head is normal)

There are no adjustments required. Shaft packing is not subjected to pressure, and normally does not require replacement. Vanes automatically compensated for any normal wear. There is no volume adjustment.

CAUSES OF FAILURE

Breakage of parts in the pumping cartridge, such as rotor or vanes (also twisted or broken shafts).

A. Excessive pressure above maximum rating.

B. Seizure due to lack of oil supply.
C. Solid matter being wedged into pumping cartridge.
D. Excessive tightening of head screws.

Excessive wear on pumping cartridge parts, such as cam ring, valve plate bushings and vanes (also bearings and shaft packing).

A. Abrasive matter in the oil being circulated through pump.
B. Thin oil of too low a viscosity for working conditions.
C. Sustained high pressure above maximum recommendation.
D. Drive belt too tight.
E. Air circulation causing chatter in system.

Breakage of pump body infrequently occurs, because of one of the following reasons:

A. High overload impact pressures, causing internal breaks in cored ports.
B. Over tightening of pipe fittings, causing external breaks at connections.

PROCEDURE WHEN DISMANTLING AND REASSEMBLING PUMP

Inspection of pumping cartridge parts in the Vane type pumps can be made as follows:

The pumping cartridge consists of the rotor (E), vanes (F), valve plate bushings (D and H), and cam ring (G). All moving parts, except shaft and shaft bearings, operate within this cartridge assembly. No moving parts therefore are in contact with the body (T).

To remove the parts comprising the pumping cartridge pump should first be removed from its pumping position. After pump has been removed from grader remove the head screws (A) and the head (B). The head-end valve plate bushing (D) may then be pulled out, leaving exposed the rotor (E) and vanes (F).

Be particularly careful to note the position of the rotor and vanes, also the position of the ring pin (P). These parts may all be reassembled incorrectly if not carefully checked, because of the fact that provision is made in the design for either right-hand or left-hand assembly. The cam ring (G) should likewise be noted carefully. The pump assembly as used on the Galion 101 Motor Grader is Right-hand assembly.

These parts may all be removed for inspection, and the shaft-end valve plate bushing (H) will then be exposed. It too may be removed by a hook-shaped tool. Parts that may show damage or excess wear should be replaced. The vanes may be turned so that their inside edge is against the cam ring, thus renewing them for service. (Worn edges must be stoned so vanes move freely in rotor slots, and beveled edges must trail direction of rotation).

Reassemble in reverse order with parts replaced in original positions, using parts drawing notes as a supplementary guide. Renew head ring packing (C) if it has become compressed or damaged, otherwise air will be drawn in when pump is started.

Extreme caution must be taken when reassembling parts to make certain that no grit or lint gets into vane slots or between assembled parts. Not only will this cause a vane to possible stick but will also perhaps cause damage to valve plate bushings. A small amount of foreign matter also will give a false indication of head screw adjustments, thereby impairing pump efficiency. Wash parts in kerosene and use every reasonable precaution against dirt.

When reassembling the pump and head take-up screws (A) if tightened excessively, can cause binding between the rotor (E) and the two valve bushings (D and H). It is very important that these take-up screws be drawn up moderately and evenly. Rotate the pump shaft by hand while gradually tightening first one and then other of the head screws, until all have been pulled up evenly without causing the shaft to bind. Sometimes an additional ⅛th turn is given after the pump has been run a short period. It may appear that these screws are so loose that they could work out, but it will be found that this seldom if ever happens.

Inspection of shaft, shaft bearings, and shaft packing can be made as follows:

The opposite end of the pump must be opened to gain access to the shaft parts. Remove the mounting bracket making it possible to then remove the shaft (K) and bearing (L). The stamped steel packing gland (M) and the special cork packing (N) may then be inspected. The cork packing should be renewed to prevent air leakage into the pump (or oil leaking out when the pump is not running). When replacing the gland make certain that its outside diameter bears on the outer ball bearing race, and its inside diameter against the cork shaft packing. All of this work may be accomplished without disturbing the head end of the pump.

CAUTION

HYDRAULIC SYSTEM

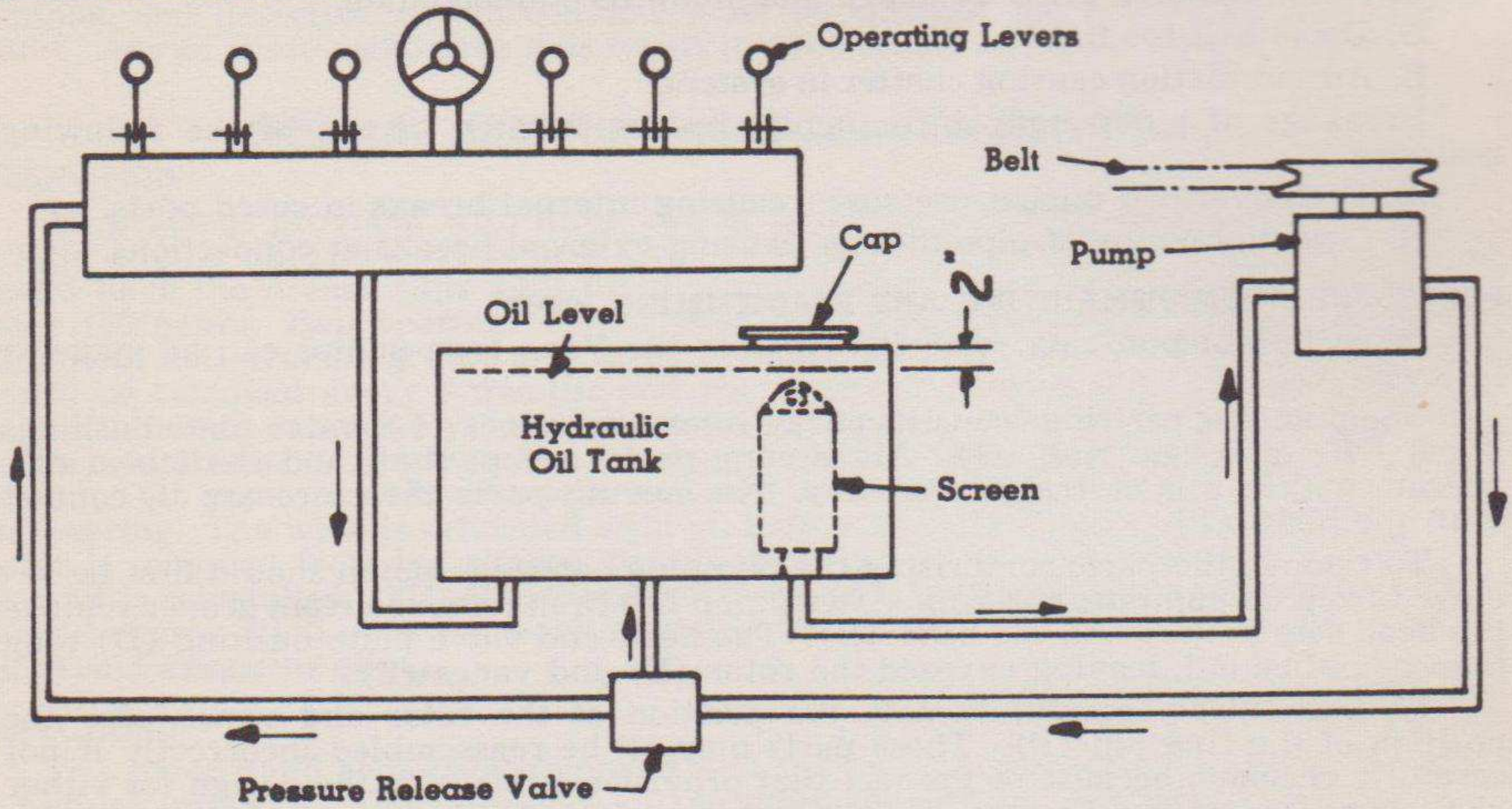

DO NOT run engine if hydraulic system fails for any reason to operate. Immediately check the following instructions.

No. 1 Remove cap from oil tank under L.H. seat cushion, reach down in the oil and turn out screen. Lift out with middle finger. Clean screen and replace. This should be done daily. Drain all oil and clean tank seasonally.

No. 2 Keep oil at proper level which is 2" below top of tank. See diagram above.

No. 3 Check pressure release valve as per instructions given in your Galion instruction book.

No. 4 See that all connections leading to and away from pump are tight. Air drawn into the sectior side of pump will cause noise in pump and pressure release valve.

No. 5 Grease pressure fitting on hydraulic pump with one stroke of gun daily.

No. 6 See that hydraulic pump drive belt does not slip on pulley.

No. 7 Do not put more tension on hydraulic pump drive belt than is necessary otherwise unnecessary strain on pump bearing will result.

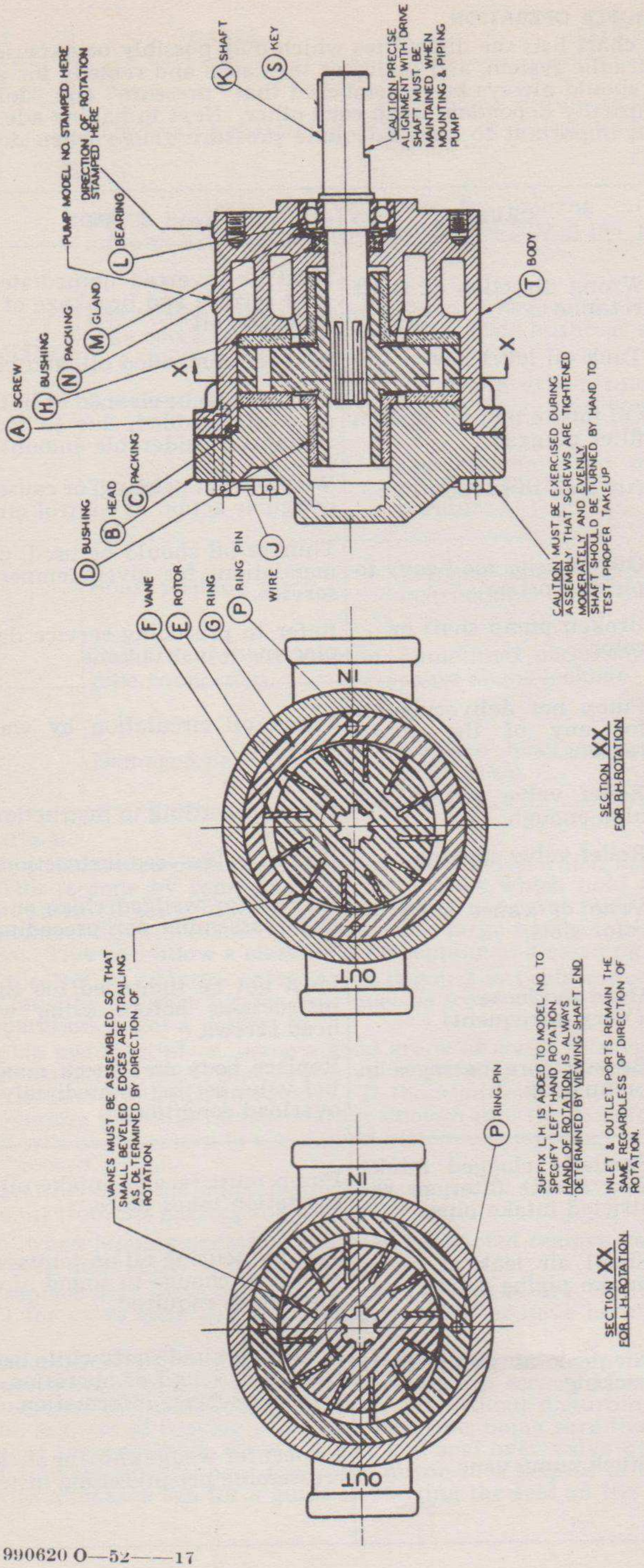

Fig. 4—Hydraulic Pump

Reproduced by courtesy of Vickers Incorporated, Detroit

DIAGNOSIS OF MINOR OPERATION

The following chart lists the difficulties which may possibly be experienced with the pump and hydraulic system, and indicates the cause and remedy for each of the troubles listed. It should always be remembered that "pressure" and "delivery" are factors which are usually dependent upon each other. Next to having adequate tools it is probably most important to have adequate pressure gauge when doing repair work.

TROUBLE	CAUSE	REMEDY
PUMP NOT DELIVERING OIL	Wrong direction of shaft rotation	Must be reversed immediately to prevent seizure and breakage of parts, due
	Tank oil level low	Add recommended oil, and check level.
	Oil intake pipe or suction filter plugged	Filters must be cleaned of lint soon after new oil is added, due to fact new oil contains considerable amount.
	Air leak in suction line	Will prevent priming, or cause noise and irregular action of control circuit.
	Oil viscosity too heavy to pick up prime	Thinner oil should be used, per recommendations for given temperature and service.
	Broken pump shaft or rotor	Refer to preceding service data for replacement instructions.
PUMP NOT DELIVERING PRESSURE	Pump not delivering oil for any of the above reasons.	Check oil circulation by watching oil in tank.
	Relief valve setting not high enough.	Check according to instructions given.
	Relief valve sticking.	Dirt in valve—see instructions.
	Vane or vanes stuck in rotor slots.	Inspect for wedged chips or sticky oil, and reassemble per preceding instructions.
	Head too loose. (Very infrequent)	Must not be tightened too tightly—see instructions before using wrench on head screws.
	Broken core passages in pump body.	Replace body and check maximum relief valve setting immediately for shock overload conditions.
PUMP MAKING NOISE	Partially clogged intake line, intake filter, or restricted intake pipe.	Pump must receive intake oil freely or cavitation takes place.
	Small air leak at pump intake piping joints.	Test by pouring oil on joints while listening for change in sound of operation. Tighten as required.
	Air leak at pump shaft packing.	Pour oil around shaft while listening for change in sound of operation. Refer to previous service information.
	Stuck pump vane.	Inspect for wedge chips or sticky oil, and reassemble per preceding instructions.

TROUBLE	CAUSE	REMEDY
PUMP MAKING NOISE	Relief valve chattering.	Air being drawn into system at pump intake or pump shaft packing. Check as above.
	Pump head too loose, or a faulty head gasket.	Test by pouring oil over head, and replacing gasket per preceding instructions.
	Restriction pulled into intake cores (rag or paper)	Remove head and clean carefully after valve plate bushings are removed.
	Air bubbles in oil tank.	Air being drawn into system at pump intake lines or around shaft packing.
	Too high oil viscosity.	Use recommended oils of 150 to 225 SSU at 100° F. with normal room temperatures.
EXTERNAL LEAKAGE AROUND PUMP	Shaft packing worn.	Replace shaft packing per preceding instructions.
	Head of oil on suction pipe connection.	Sometimes necessary, but will usually cause slight leakage.
	Damaged head packing.	Replace head packing per preceding instruction.

MANIFOLD (Fig. 6)

Installing new valve pistons: First, remove old valve which has become defective or worn. This is done by removing two cap screws which hold the valve bracket, then lift out valve (13) and bracket (6) and detach old valve from bracket by removing chain connecting link (5). Also remove the large hexagon plug (15) at bottom of this valve. This will allow a clear hole for lapping and cleaning operations.

Second, select an oversize valve which is going to replace the worn valve. This new valve must be oversize for the hole may be worn out of round and will require the next operation to get a perfect fit.

Third, lap piston in place, using a good grade of water mix valve grinding compound. Care should be taken that excess valve grinding compound does not accumulate where it would be hard to remove. If the manifold is not worn sufficiently to allow the oversize piston to be inserted far enough into the manifold for the lapping operation it will be necessary to use the old piston as a lapping tool until the oversize piston can be used.

DO NOT lap the piston too much as the piston must fit tight enough in the manifold to keep the oil from by-passing the piston.

Fourth, when lapping operation has been completed remove valve and clean both valve and hole thoroughly with kerosene.

Fifth, replace new valve and assemble all parts as before. We would suggest new oil seal (7) for valve stem as old one may be worn or have become damaged when removed.

Replacing Oil Seal: The oil seals on the valve pistons are replaced in the following order. Remove valve brackets by removing two cap screws after the coupling link has been removed the bracket may be lifted off without disturbing the valve piston. Press old oil seal out of bracket and insert new one, being sure that the spring in the seal is toward the manifold. Slide bracket and seal over valve piston and assemble link. In sliding the oil seal over the valve piston it is helpful to use a thin piece of metal such as a tobacco can for a guide in starting the seal on the piston.

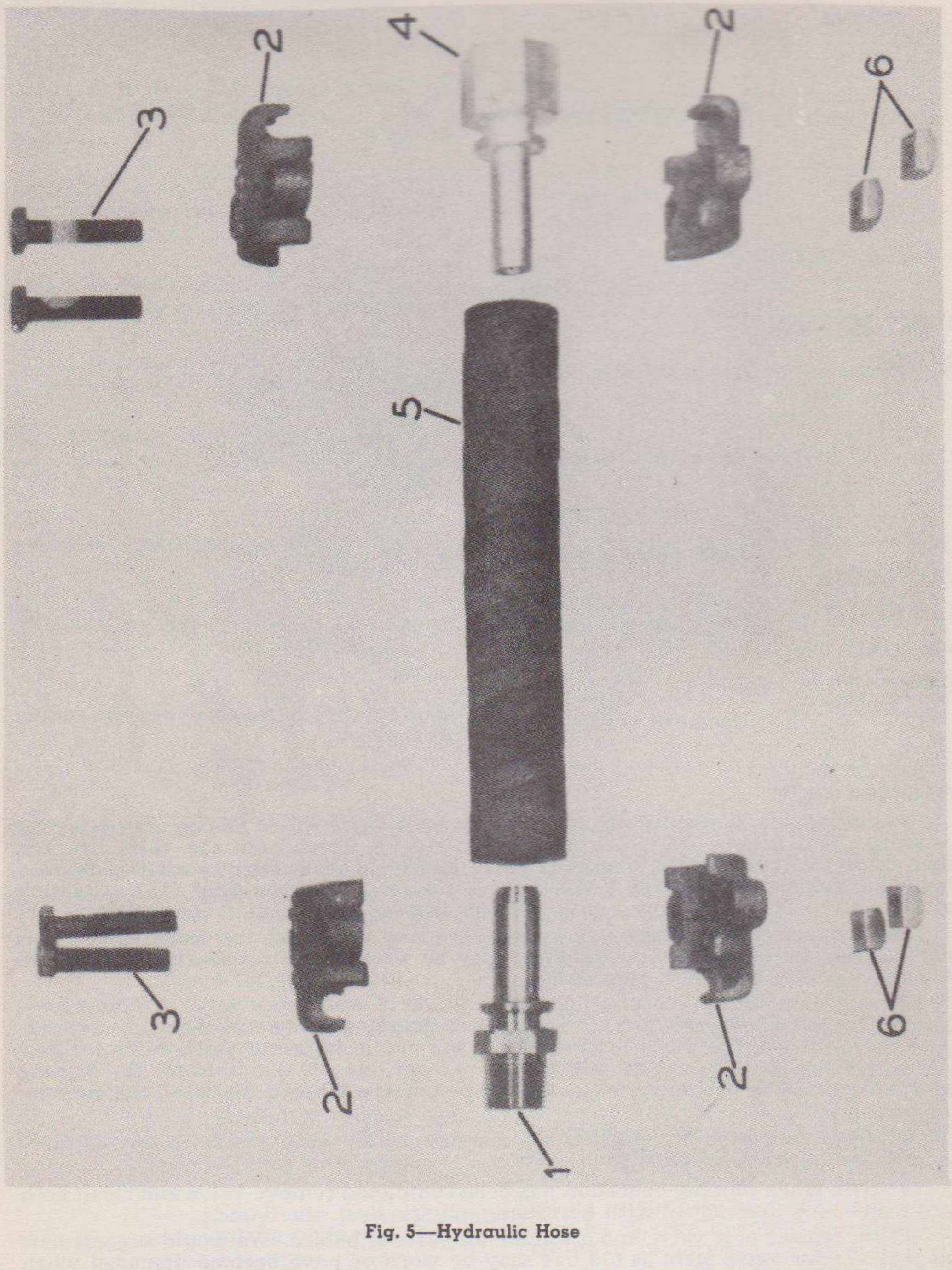

Fig. 5—Hydraulic Hose

Replacing Springs: The following applies to replacement of springs on the various control valves but not to the steering valve which is discussed elsewhere.

To replace upper spring (10) disconnect link from valve piston, remove bracket and seal, remove old spring and replace with new one and reassemble.

To replace lower spring (14) remove hexagon nut at bottom of valve in manifold, remove old spring and replace with new.

Whenever the valve bracket is removed be sure the oil seal or gasket is not damaged

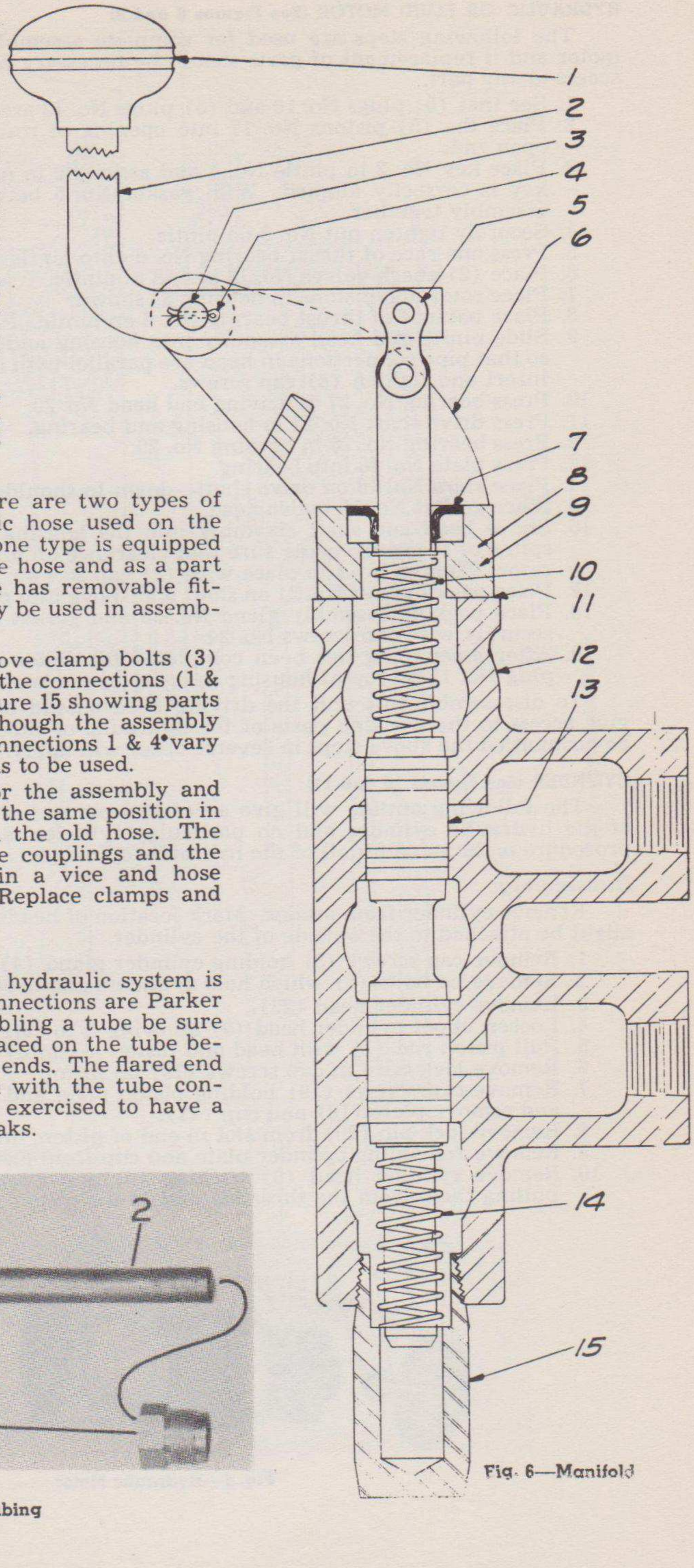

Fig. 6—Manifold

HYDRAULIC HOSE (See Fig. 5) There are two types of hydraulic hose used on the Galion 101 Motor Grader—one type is equipped with fittings molded into the hose and as a part of the hose—the other type has removable fittings and the old fittings may be used in assembling new hose.

To rebuild this hose, remove clamp bolts (3) and clamps (2) after which the connections (1 & 4) can be removed. The Figure 15 showing parts of hose of one type and although the assembly principal is the same the connections 1 & 4 vary according to the place hose is to be used.

Select the proper hose for the assembly and press couplings into hose in the same position in which they were placed in the old hose. The hose is very tight fit on the couplings and the couplings should be held in a vice and hose forced over the coupling. Replace clamps and bolts.

TUBING

The tubing used on the hydraulic system is dead soft copper and the connections are Parker tube connections. In assembling a tube be sure the tube connections are placed on the tube before the flare is made on the ends. The flared end should be made to conform with the tube connection and care should be exercised to have a smooth fitting to prevent leaks.

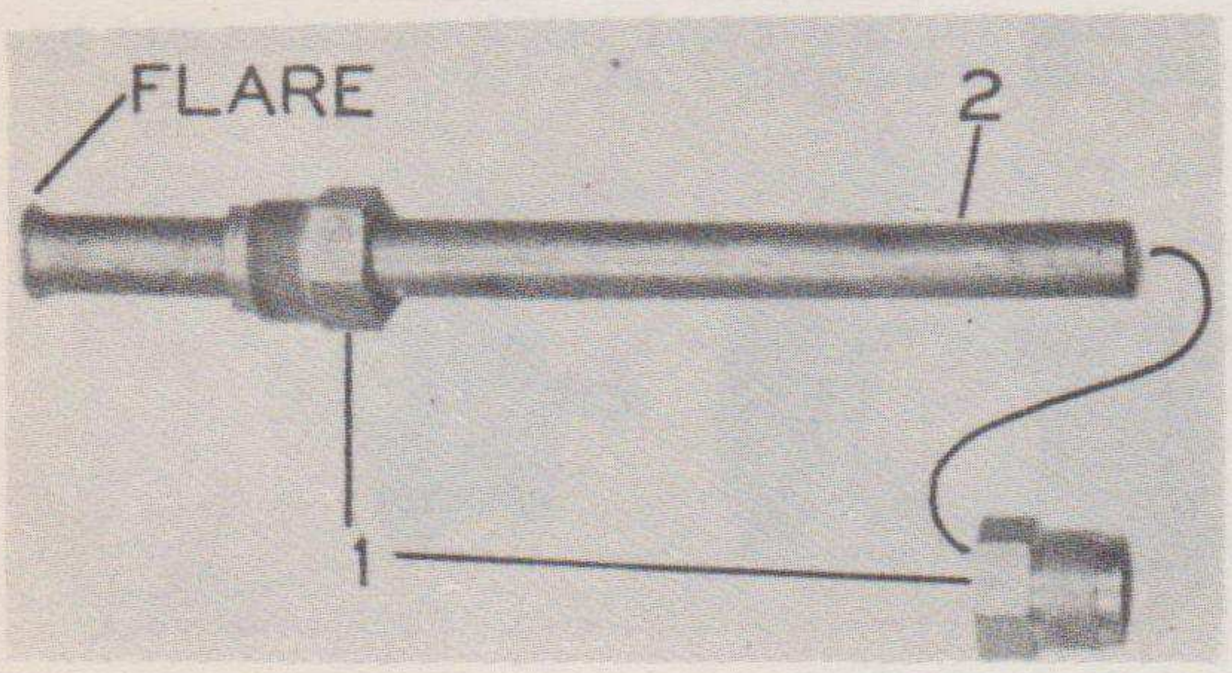

Fig. 7—Tubing

HYDRAULIC OR FLUID MOTOR (See Figures 8 and 9)

The following steps are used for complete assembly of the hydraulic or fluid motor and if replacement of parts should be necessary each step will give detail for access to any part.

1. See that (5) plugs No. 10 and (5) plugs No. 12 are tight in rotor.
2. Place the (5) pistons No. 17 into opening of rotor with tapered end toward open end.
3. Place key No. 2 in pintle No. 1 and assemble in motor head No. 4, being sure key is correctly aligned. With gasket No. 5 between pintle and head press assembly together.
4. Securely tighten nut No. 3 on pintle.
5. Press one race of thrust bearing No. 6 onto pintle as shown.
6. Place (2) check valves No. 13 in end of pintle.
7. Place rotor and pistons in housing as shown.
8. Place balance of thrust bearing No. 6 on pintle. Place gasket No. 9 on head.
9. Slide pintle and head assembly into housing and rotor. Turn head assembly so that pipe connections in head are parallel with motor base mounting bosses. Insert and tighten (8) cap screws.
10. Press bearing No. 27 in driving end head No. 20.
11. Press drive shaft No. 25 in housing and bearing.
12. Press bearing No. 26 in housing No. 20.
13. Press plate No. 18 into bearing.
14. Place shim No. 16 on drive shaft—down to shoulder.
15. Place gasket No. 19 under head.
16. Shove head and shaft assembly into the housing with spline shaft entering spline of the rotor, being sure that clearance of .010 is allowed for end-play of rotor. Tighten head in place with (8) cap screws.
17. Place packing unit No. 21 on shaft and shove into place in head.
18. Place packing assembly gland No. 23 and gasket No. 22 in place and tighten securely with cap screws No. 24.
19. After assembling has been completed fill motor with hydraulic oil through plug No. 15 on top of housing in order to put motor in operating condition.

To disassemble this unit the driving head should be removed first which will give access to the working parts of the hydraulic or fluid motor. If all parts are to be dismantled the above steps in reverse order will apply.

CYLINDER (See Figures 10 and 11)

The following outline will give a detailed method of disassembly and assembly of the hydraulic cylinder and no particular cylinder is mentioned as the genera procedure is the same for all of the hydraulic cylinders.

Disassembly

Remove cylinder from grader. Mark location of heads, fittings and brackets what might be attached to the outside of the cylinder.

1. Remove cap screws (3) holding cylinder gland (4).
2. Remove tie bolts (6) which hold cylinders and head assembly.
3. Remove cylinder head (22).
4. Loosen upper cylinder head (9) allowing it to carry on the piston rod.
5. Pull piston rod (1) with head and piston assembly from cylinder barrel (11).
6. Remove lock wire in cap screws (19) on piston.
7. Remove cap screws (19) holding piston plate and packing cup on lower end and remove plate (18) and cup (17).
8. Remove lock pin (20) from slot in end of piston, unscrew piston from rod.
9. Remove remaining cylinder plate and cup from piston as above.
10. Remove cylinder head (9) packing (5) and gland (4) from piston rod by pulling them from the threaded end of the piston rod.

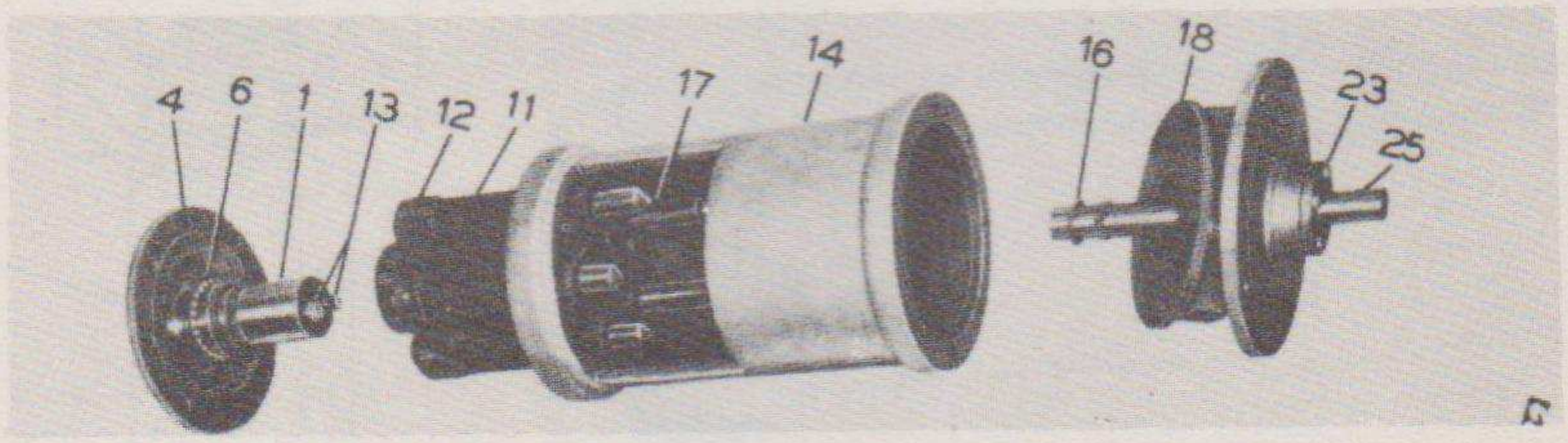

Fig. 8—Hydraulic Motor

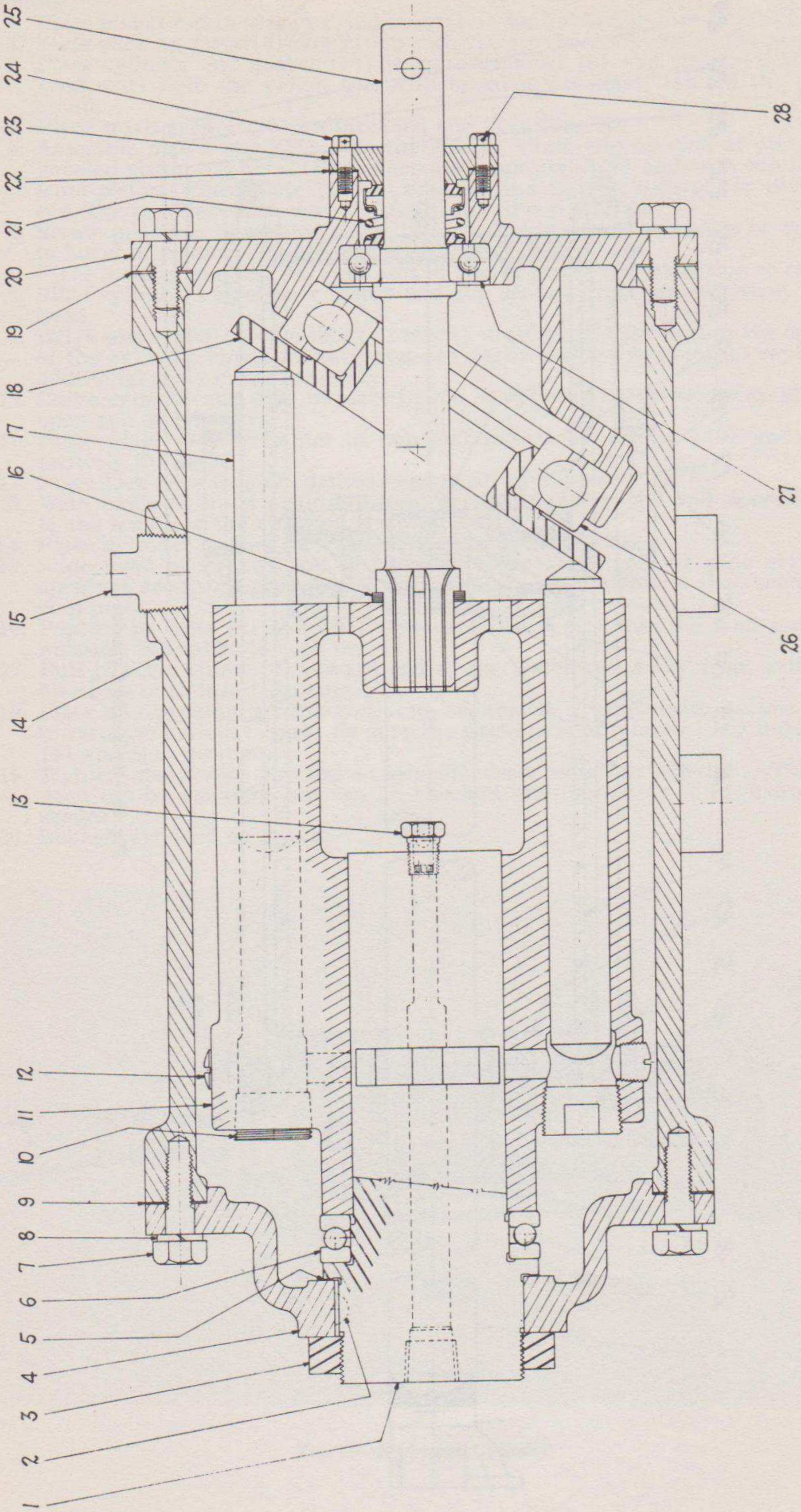

Fig. 9—Hydraulic Motor

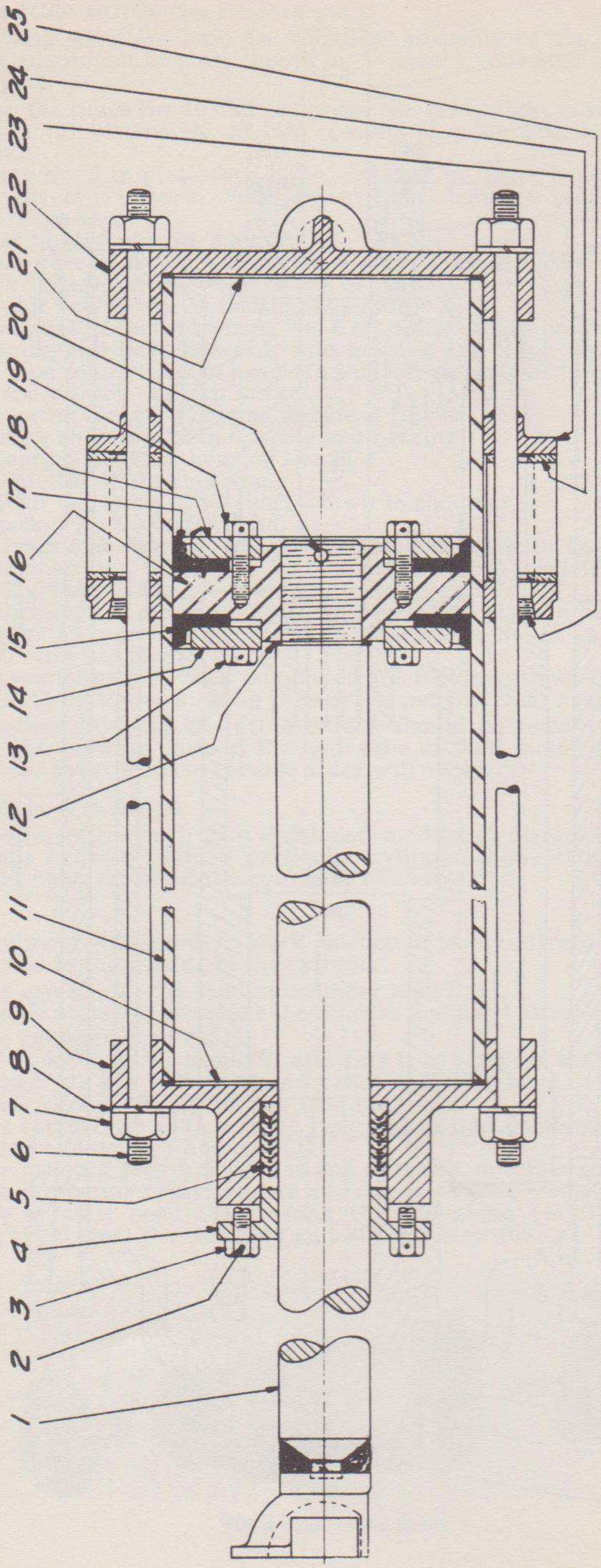

Fig. 10—Hydraulic Cylinder

Assembly

1. Place piston rod in vice or suitable location for holding to assemble cylinder.
2. Slide packing gland (4) over piston rod (1) from threaded end of the piston rod.
3. Place cylinder end gasket (10) in cylinder head (9) and slide cylinder head (rod end) onto the piston rod with opening for gland toward the packing gland.
4. Place small gasket (12) on threaded end of piston rod.
5. Assemble piston cup (15) onto the piston. Place cup on side of piston with beveled piston rod hole. (The piston side opposite slots) and with cup lip away from piston. Place plate (14) in position and tighten securely in place with cap screws. Place lock wire through head of cap screws.
6. Screw piston as assembled above on rod—being sure that gasket on rod seats in bevel of piston. Tighten piston securely in place.
7. Place locking pin (20) through slot in end of piston to lock piston to rod.
8. Slide cylinder barrel over piston and cup seating rim against gasket (10) in head.
9. Drive piston rod (with a block of wood) until the piston reaches the open end of the cylinder barrel or until you can easily reach the piston to replace the additional parts in the assembly.
10. Drive cylinder cup (17) in place in end of cylinder barrel with cup lip facing open end of cylinder.
11. Place plate (18) in center of cup and insert cap screws (19) and tighten securely in place.
12. Place lock wire through drilled head of all cap screws.
13. With block of wood against piston, drive the piston and rod approximately ½ the length of the cylinder.
14. Place cylinder gasket (21) in lower cylinder head (22).
15. Slide head over open end of cylinder being sure that the pipe connection openings are in proper location for assembly on grader and that head gasket is in place.
16. Replace tie bolts (6) and tighten securely being sure that the same amount of pressure is applied to each nut.
17. Pull packing gland (4) toward end of the piston rod away from cylinder to allow room to insert packing (5).
18. Place rod packing around rod (one section at a time) with hollow of "V" toward the cylinder head. Be sure the packing is all placed in cylinder heads (9) and is in position.
19. Tighten gland with two cap screws (3) draw snug but not tight. The gland need not be too tight but can be checked after assembly is in operation on grader.
20. Replace cylinder on grader.

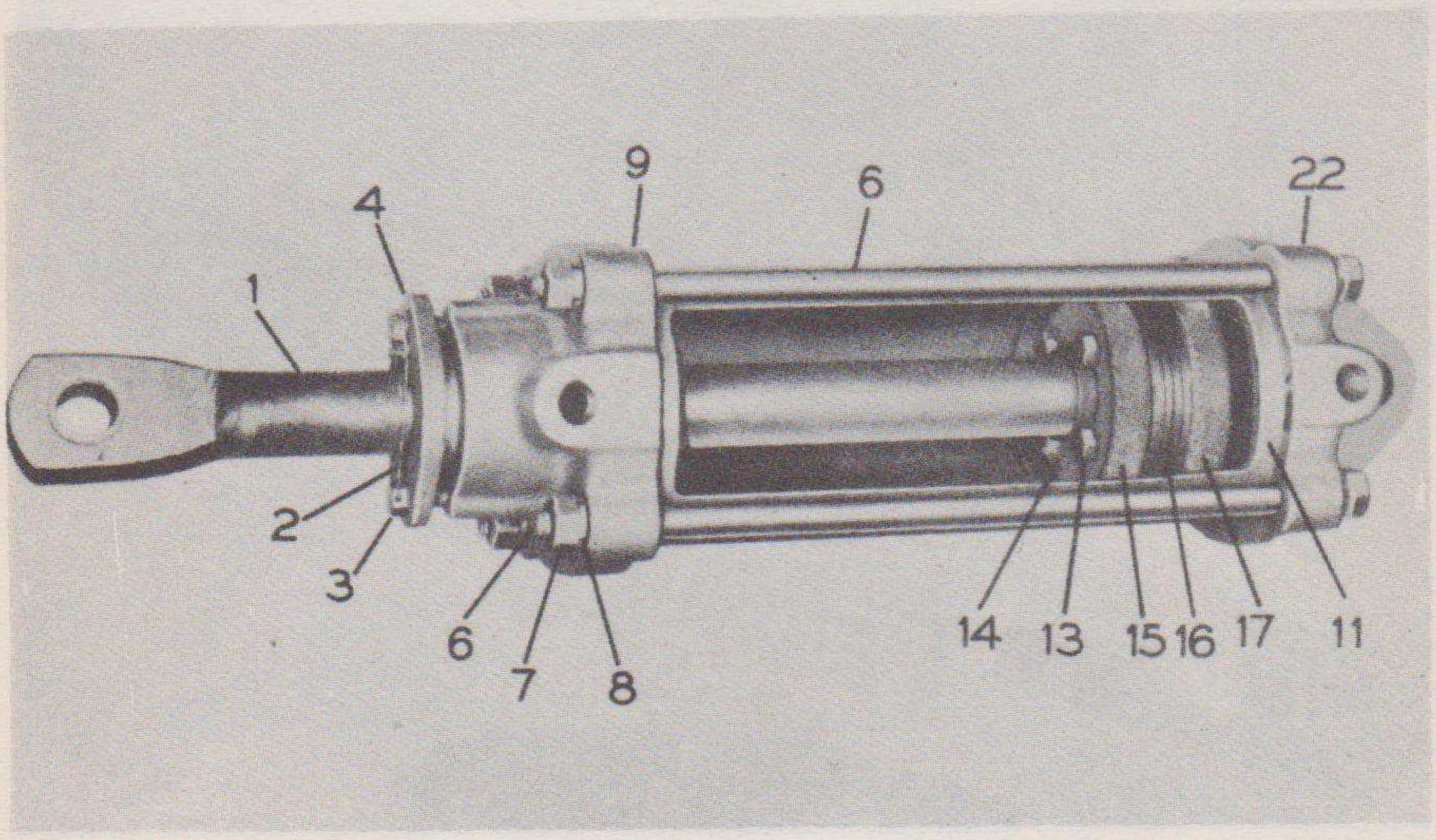

Fig. 11—Hydraulic Cylinder

INDEX

	Pages
TRANSFER DRIVE	4 to 7
A. REMOVE TRANSFER DRIVE UNIT FROM TRANSMISSION CASE	4
FIGURE 5—TRANSFER DRIVE UNIT ASSEMBLY	5
B. REMOVE TRANSFER INPUT AND UPPER IDLER SHAFTS	6
C. REMOVE LOWER IDLER SHAFT	7
D. REASSEMBLE TRANSFER DRIVE UNIT	7
REAR AXLES	8 to 10
A. REMOVE ONE REAR AXLE CARRIER	8
FIGURE 9—TRANS. REAR COMPARTMENT AND AXLE CARRIER ASSM.	9
B. DISASSEMBLE REAR AXLE CARRIER	10
C. REASSEMBLE REAR AXLE CARRIER	10
TRANSMISSION REAR COMPARTMENT	11 and 12
A. REMOVE BULL GEAR ASSEMBLY	11
B. DISASSEMBLE DIFFERENTIAL HOUSING	11
C. REMOVE BULL PINION SHAFT ASSEMBLY	12
D. REASSEMBLE TRANSMISSION REAR COMPARTMENT	12
TRANSMISSION FRONT COMPARTMENT	14 and 15
FIGURE 13—TRANSMISSION ASSEMBLY	13
A. REMOVE SHIFT FROM TRANSMISSION TOP COVER	14
B. REMOVE SHIFT MECHANISM FROM TRANS. CASE	14
C. DISASSEMBLE SHIFTER ASSEMBLY	14
D. DISASSEMBLE TRANSMISSION TOP SHAFT	14
E. DISASSEMBLE REVERSE IDLER SHAFT	15
F. REMOVE LOWER TRANSMISSION SHAFT	15
G. REASSEMBLE TRANSMISSION FRONT COMPARTMENT	15
REMOVING TRANSMISSION	1 to 3

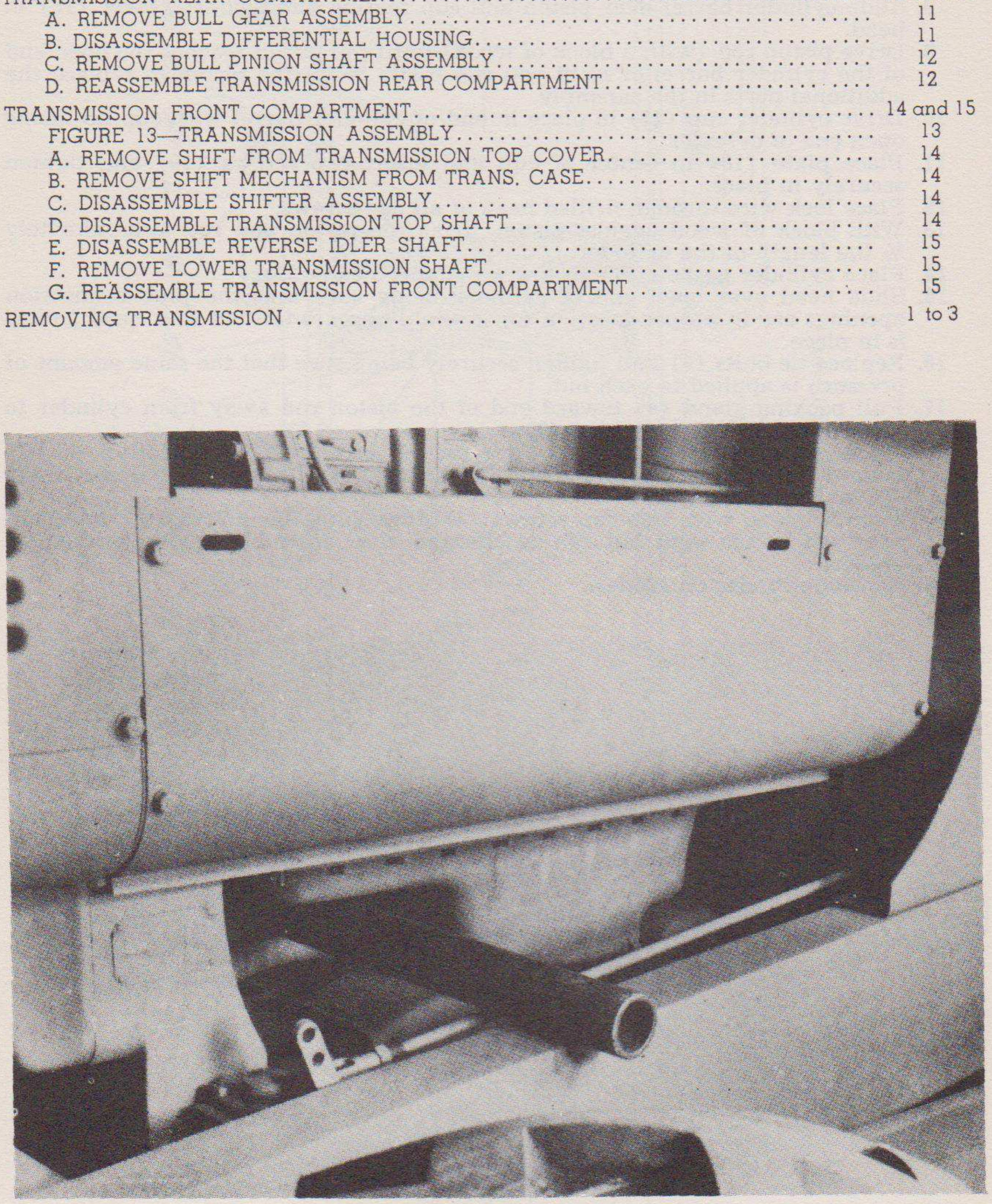

Fig. 1

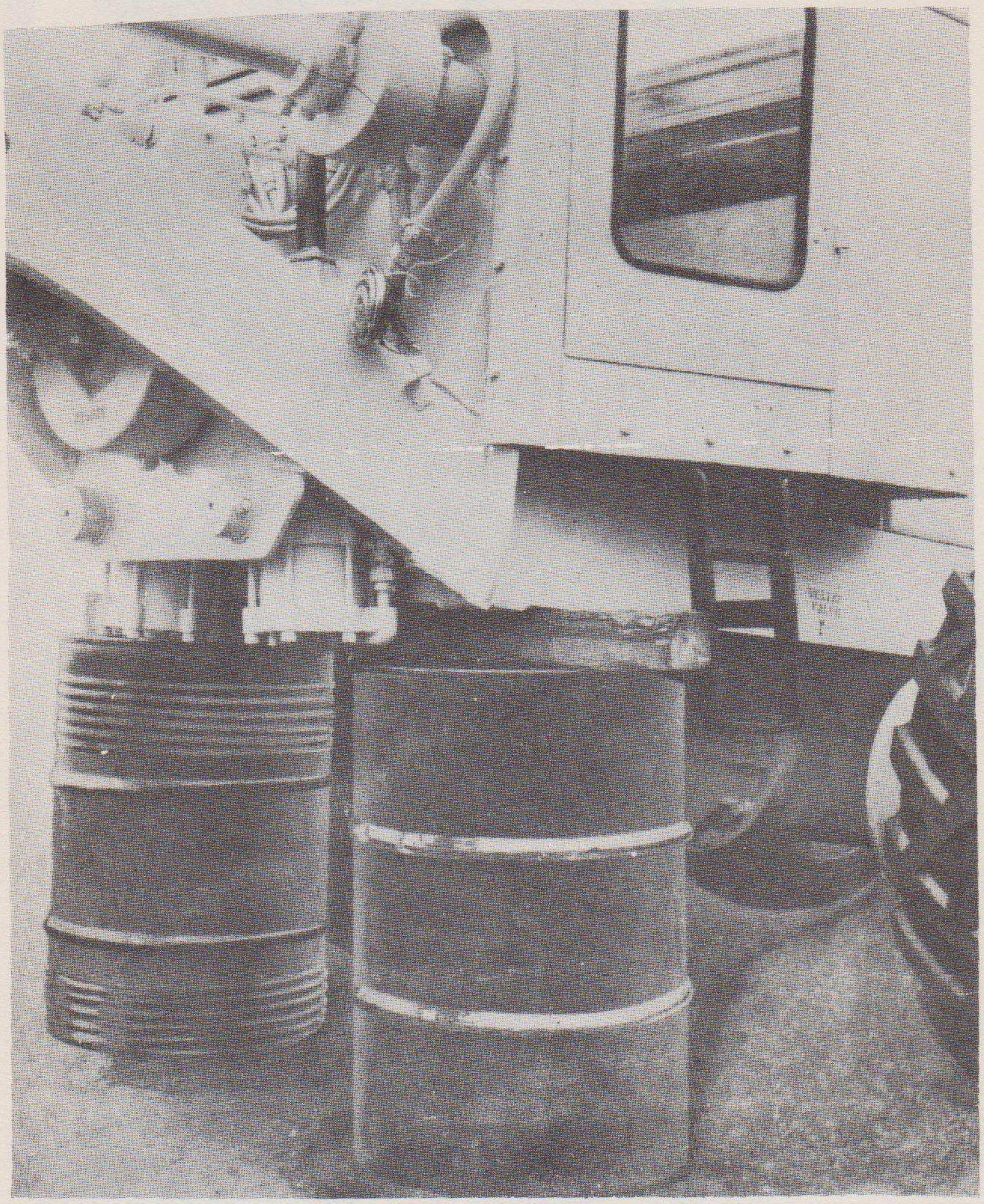

Fig. 2

REMOVE TRANSMISSION

Drain oil from Transfer Housing. Remove cover plate from lower end of Transfer Case. Remove nut holding Pinion on end of Output Shaft and pull pinion from shaft. Remove capscrews holding Transfer Case to Transmission. Remove both axle clamp caps. Securely block front end of motor with weight resting on both frames and remove front motor support. (See Figure 1). Disconnect Emergency Brake Rod at Transmission. Disconnect Hydraulic Brake Hose at connection to lines at frame. With motor properly blocked and all parts disconnected as outlined, either support front end of transmission with heavy chain around double drive as shown (Fig. 3) or a good wheeler jack under transmission case, after which the rear end of the grader can be raised by a Chain Fall or jack to sufficient height to clear Transmission cover and block as shown (Fig. 2). Transmission on Tandem drive can now be rolled from under Grader.

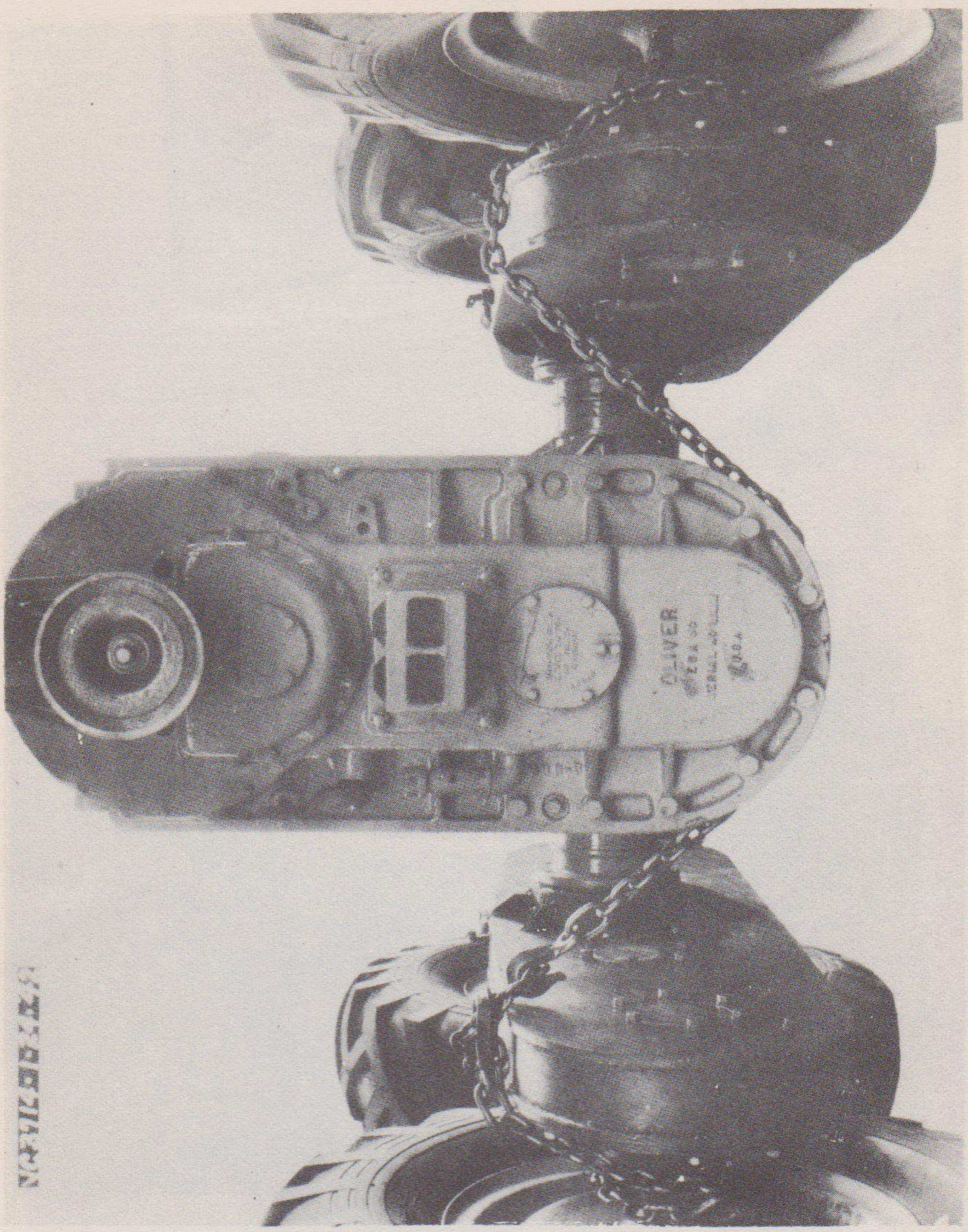

Fig. 3—Transfer, Transmission and Double Drive

REPLACING TRANSMISSION

In replacing the transmission follow each step in reverse. If Oil seal where transmission shaft goes through the overdrive case has been damaged it should be replaced after transmission is in place just before pinion is replaced on the output shaft.

REMOVING TRANSMISSION AND OVERDRIVE AS ONE UNIT

After motor has been removed disconnect all parts as listed under transmission and block transmission as already described. Remove all attaching bolts holding the above parts to the grader frame and raise frame high enough to clear the overdrive.

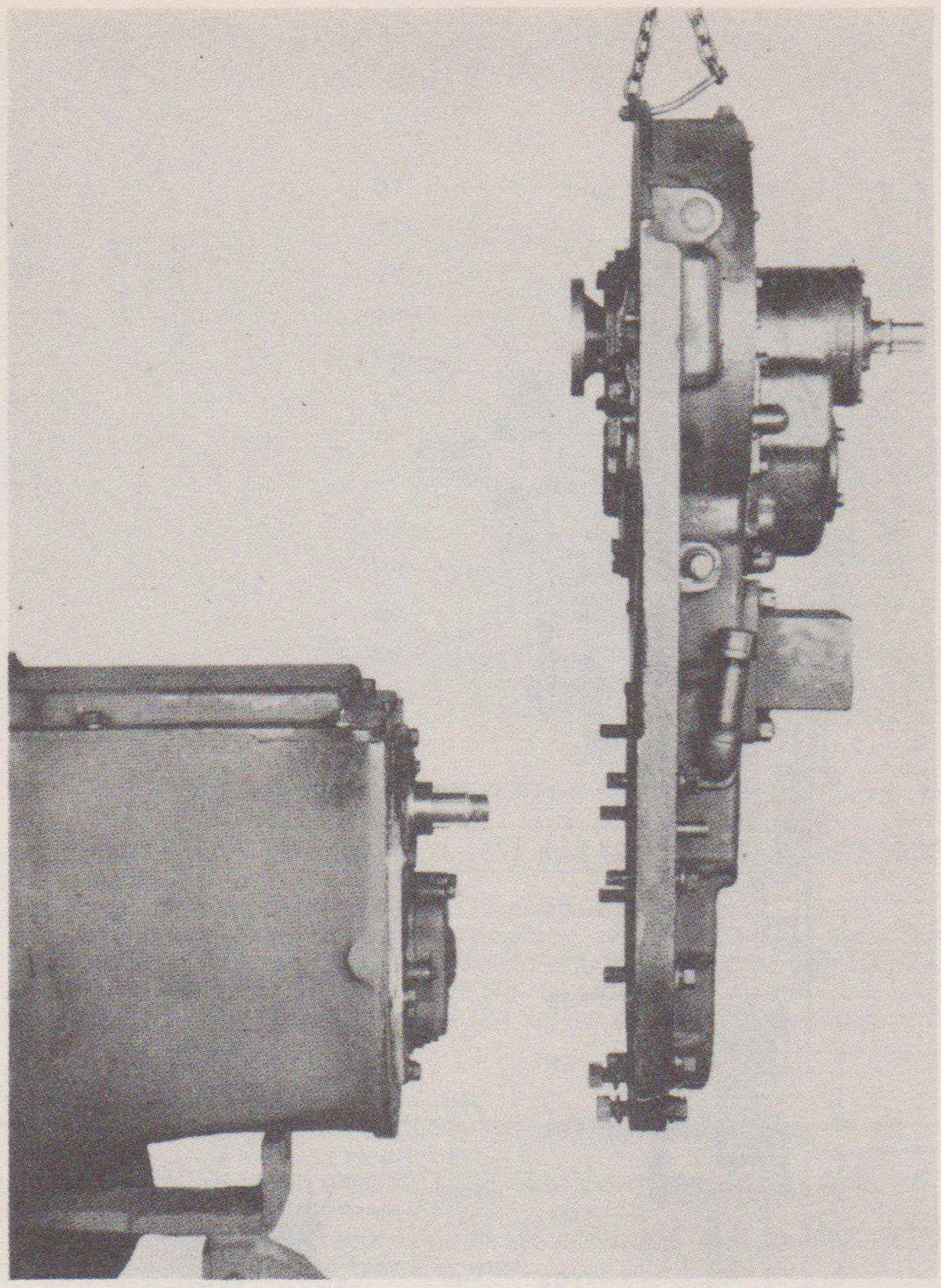

Fig. 4—Removing Transfer Drive

TRANSFER DRIVE

A. To Remove Transfer Unit from Transmission Case (See Figures 4 and 5)
1. Clean mud and dirt off outside of case.
2. Drain case through pipe plug hole at bottom of No. 99 cover.
3. Remove cover and gasket.
4. Remove No. 100 nut and No. 102 gear.
5. Remove the eight lower capscrews which hold transfer housing to transmission case leaving the two upper screws.
6. Remove the dowels by screwing a nut down on threaded portion.
(NOTE: Do not screw nuts down far enough to run off thread. If dowel is not loose enough after first pull, put a spacer under the nut and pull dowel the rest of the way.)
7. Remove top capscrews which hold transfer housing to transmission case and pull transfer housing away from case.
(NOTE: Be sure to pull transfer straight away from case until clear of upper transmission shaft. If this is not done, the weight of transfer housing resting on the shaft will ruin No. 106 leather seal. It is recommended that the No. 105 spacer be removed before removing transfer housing.)

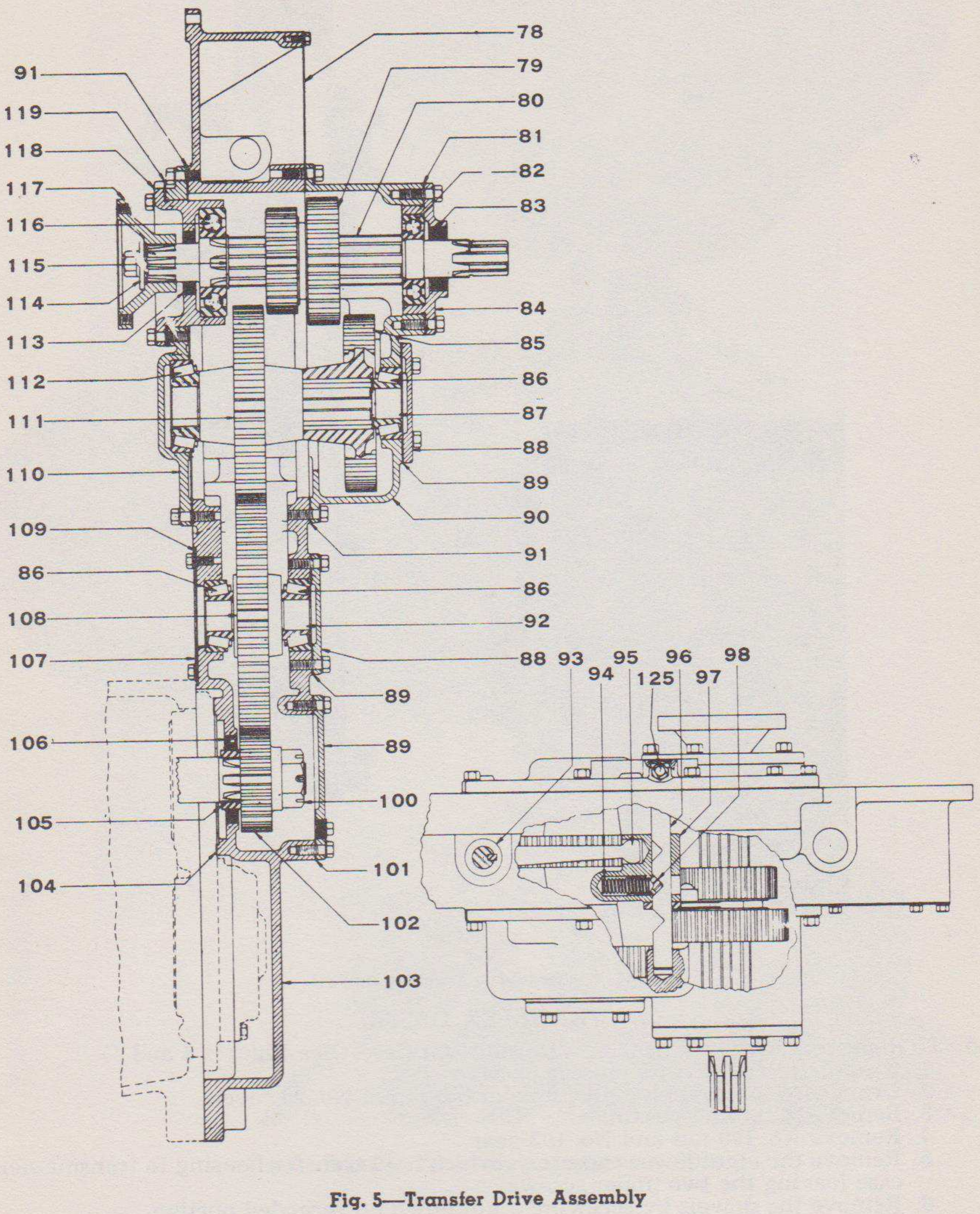

Fig. 5—Transfer Drive Assembly

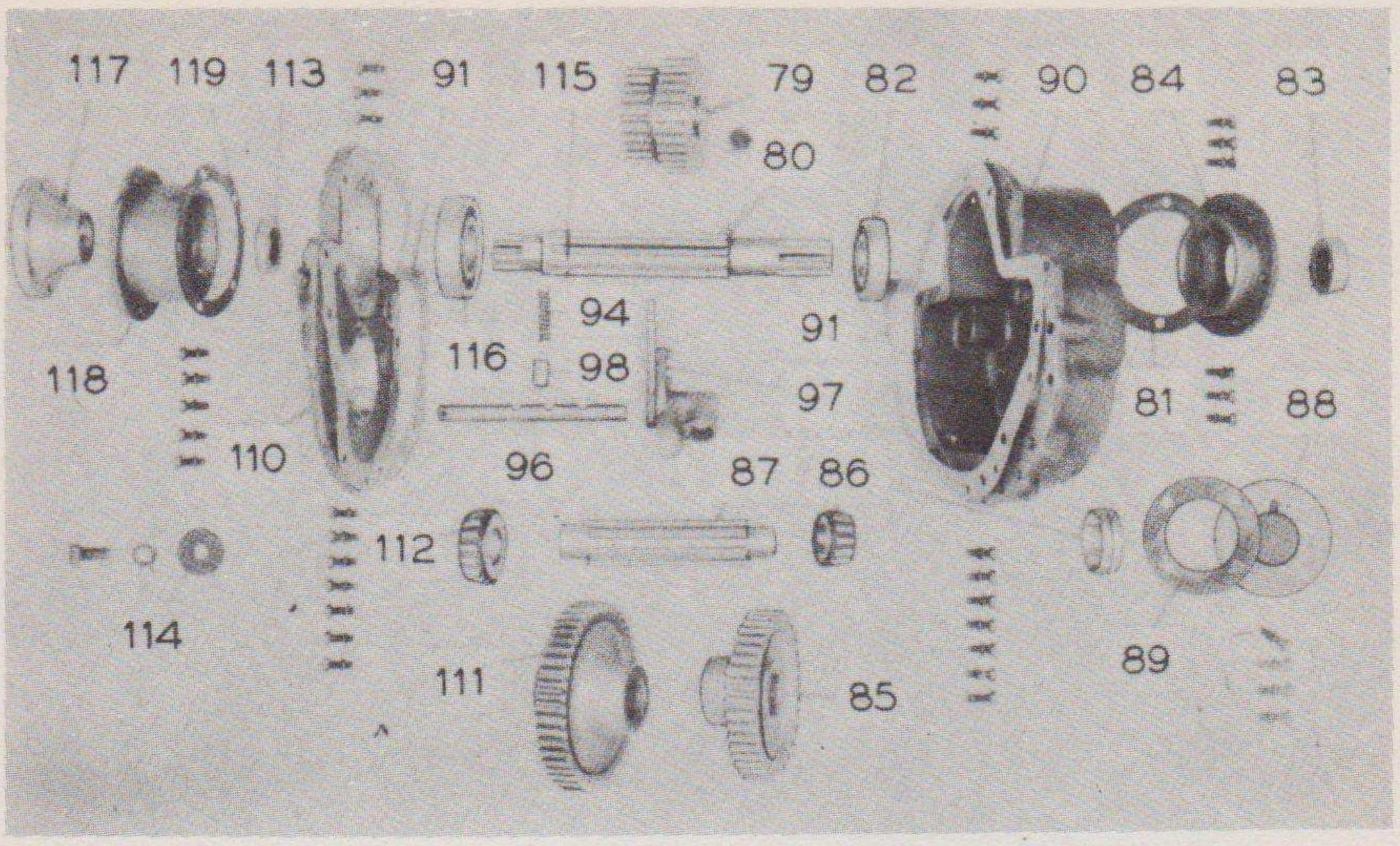

Fig. 6—Transfer Input and Upper Idler Shaft

B. To Remove Transfer Drive Input Shaft (80) and Upper Idler Gear Shaft (87). (See Figures 5 and 6)

1. Remove capscrew, washer and No. 117 coupling.
2. Lay transfer housing in horizontal position with front side up. Support on both ends high enough so work can be done both on top and bottom sides.
3. Remove snap ring from outer end of No. 80 shaft.
4. Remove No. 84 cap by inserting chisel or screw driver between cap and housing and prying upward.
5. Remove No. 88 cap.
6. Remove No. 78 steel plate.
7. Remove No. 90 housing from transfer case. This housing is doweled to the case so must be pried off with screwdriver.
8. Loosen lock nut and remove No. 125 setscrew from right rear of transfer housing.
9. The input shaft assembly, top idler shaft assembly and shifter rail assembly can now be lifted out of the transfer case.

   (NOTE: Input shaft must be tapped on the back end to pull bearing from No. 118 cap.)
10. The two gear shafts can now be disassembled individually by pressing off bearings. CAUTION: If shifter fork is taken off shifter rail, be careful of poppet and poppet spring jumping out forcibly to cause injury.

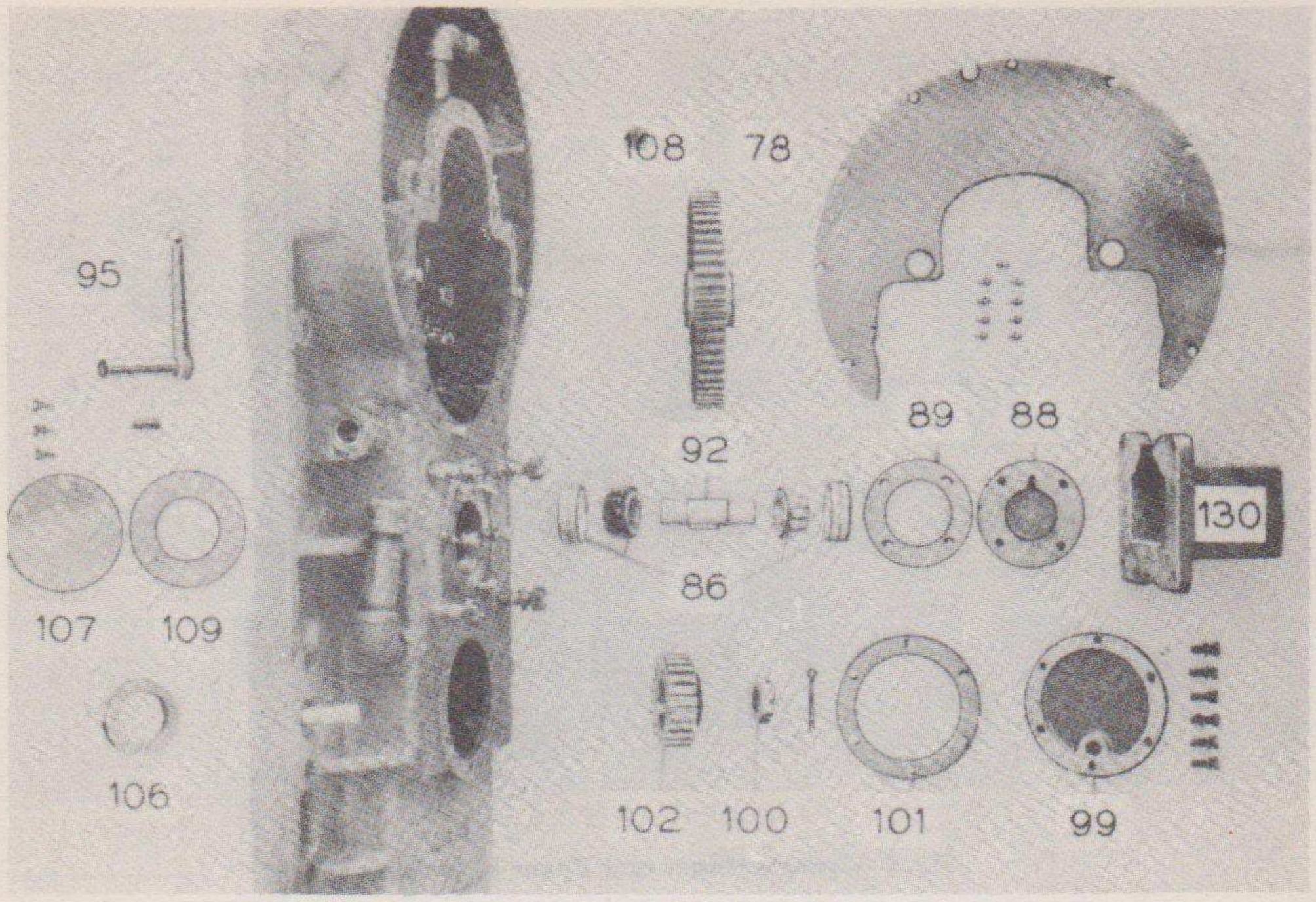

Fig. 7—Lower Idler Shaft

C. To Remove Lower Idler Gear Shaft (92). (See Figures 7 and 5)

1. Remove No. 130 power unit front support.
2. Remove No. 88 bearing cap and No. 107 plate.
3. Remove No. 92 shaft out through front end of case by driving on back end of shaft with hammer and brass bar.
4. Push No. 108 gear toward lower end of case until No. 95 shifter arm can be removed.
5. Pull gear out of opening at top of case.

D. To Reassemble Transfer Housing Reverse Operations Followed in Disassembly.

CAUTIONS:

1. In reassembling, inspect all gaskets and oil seals and replace any that have been damaged.
2. It is necessary to shellac No. 107, 89 and 101 gaskets and shims when reassembling.
3. In replacing No. 88 cap on No. 90 housing, be sure that the notch in the inner flange is toward the top of the case over the oil hole directly above the bearing bore.
4. Bearings on the upper and lower idler shafts (Nos. 92 and 87) should be adjusted so that the shafts rotate freely but have no end play.

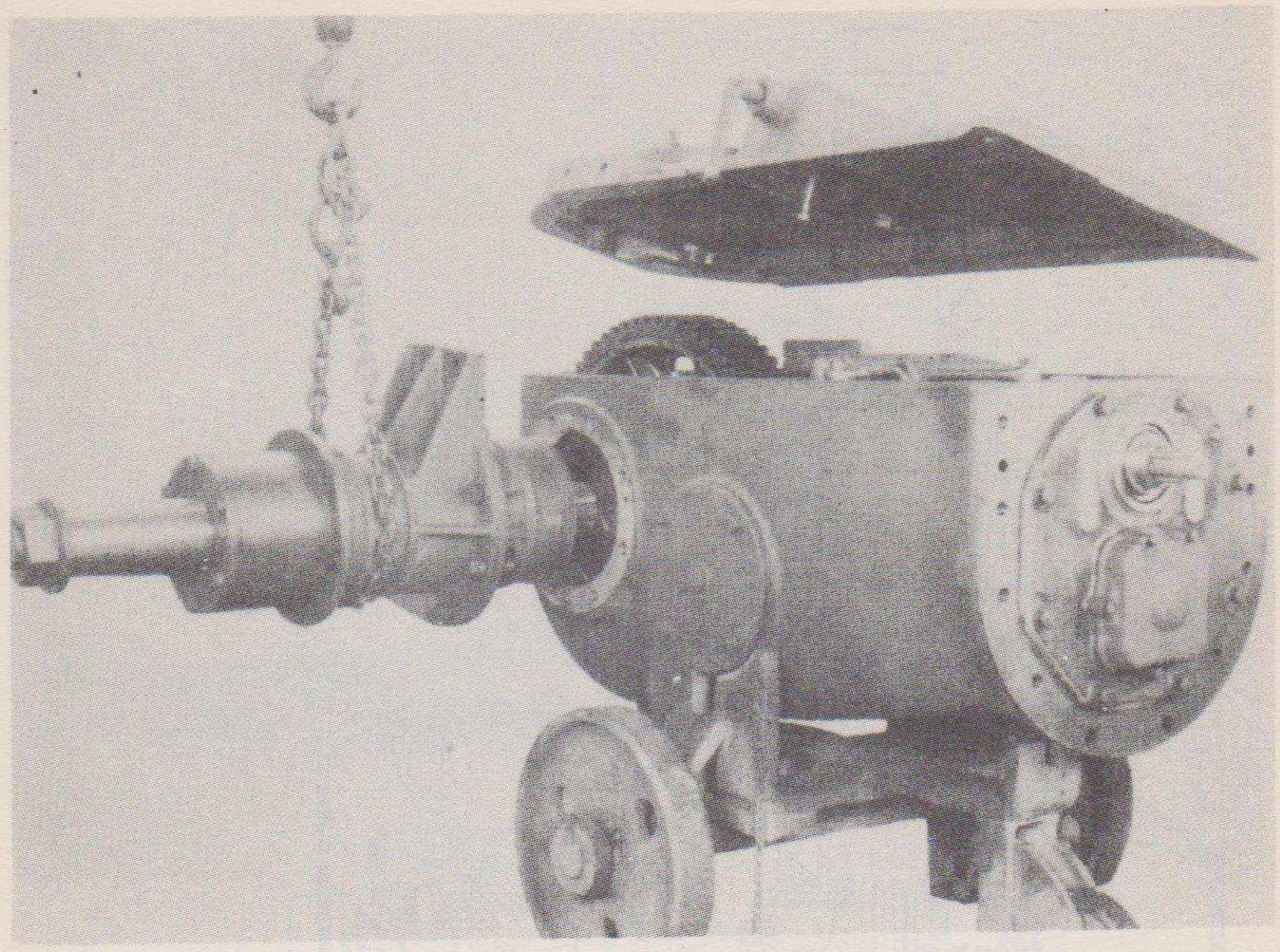

Fig. 8—Removing Rear Axle Carrier and Trans. Top Cover

REAR AXLES

A. To Remove One Rear Axle and Carrier. (See Figures 8 and 9)
   1. Be sure that mud and dirt have been cleaned off transmission and axle carrier.
   2. Drain rear part of transmission case through pipe plug hole on under side.
   3. Remove capscrews from flange of No. 16 carrier.
      (Be sure to reinsert the same number of shims between transmission top cover and carrier flange in reassembly.)
   4. Axle carrier assembly can now be pulled from transmission case.

990620 O—52——18

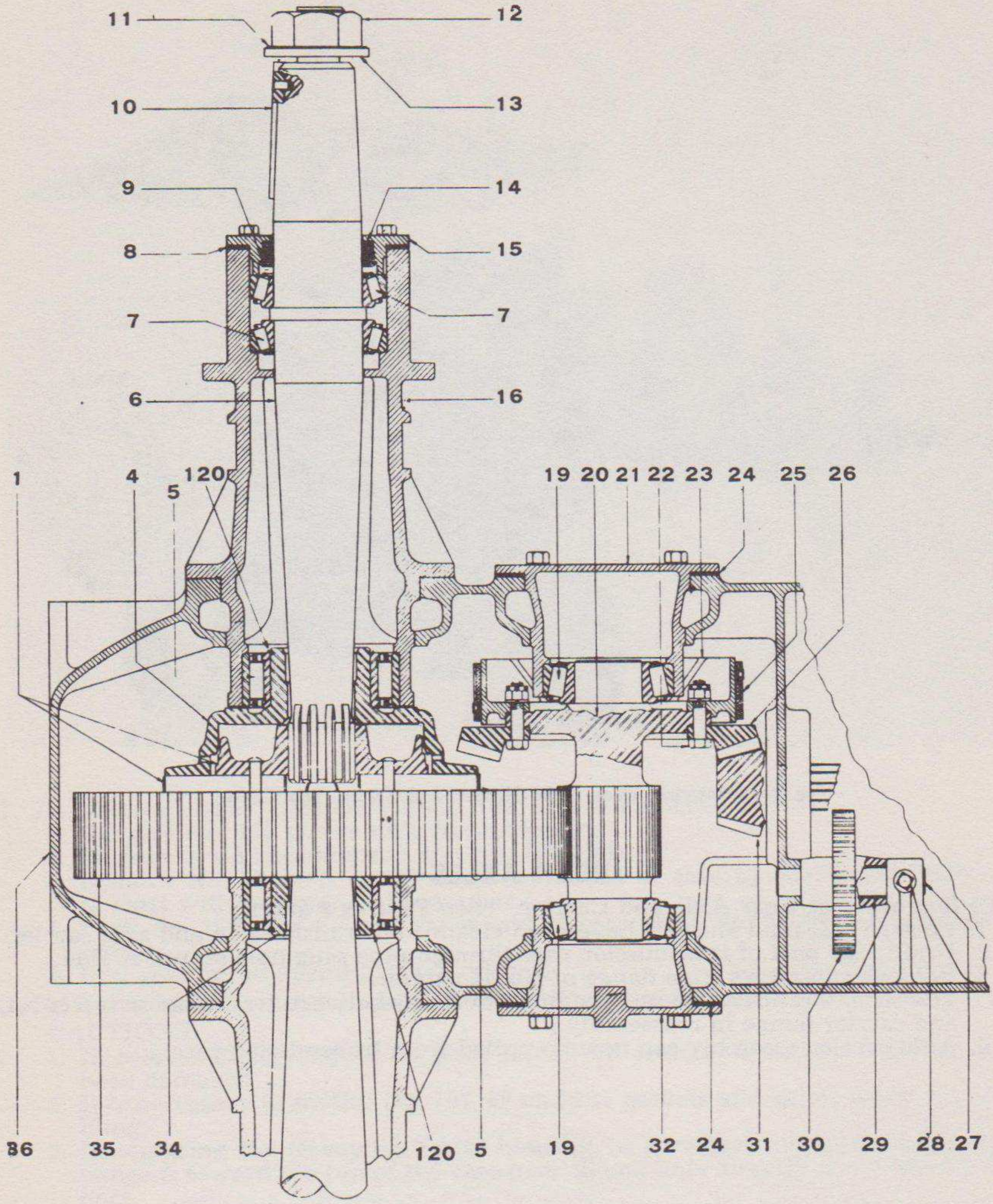

Fig. 9—Transmission Rear Compartment and Axle Carrier Assemblies

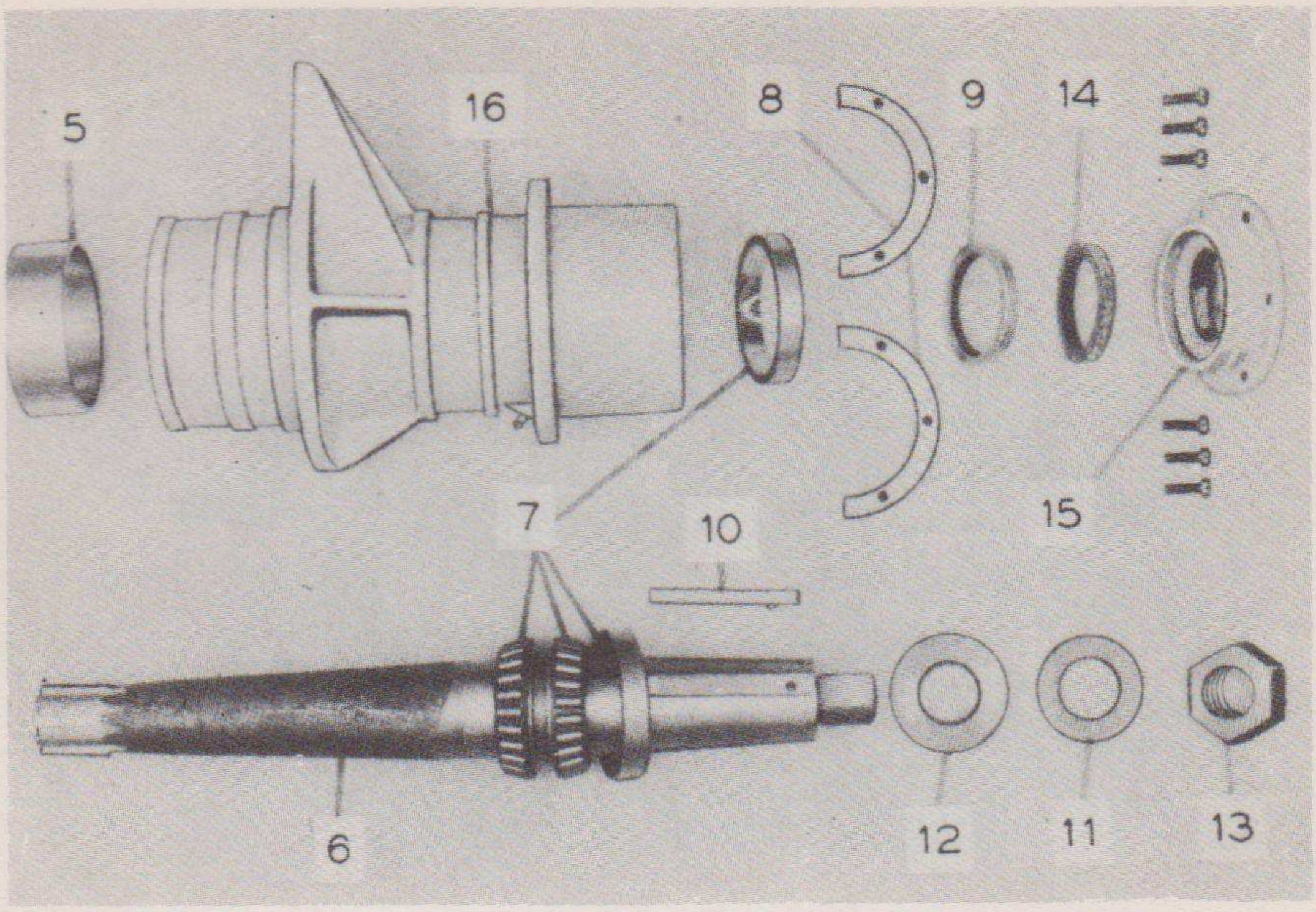

Fig. 10—Rear Axle and Carrier

B. To Disassemble Rear Axle Carrier. (See Figures 9 and 10)
   1. Remove No. 13 nut, No. 11 and No. 12 washers and No. 10 key from outer end of axle.
   2. Remove No. 15 bearing cap and No. 8 shims.
   3. The axle can now be driven out of carrier.
   4. Bearing cones No. 7 can be pressed from shaft.
   5. Bearing cups No. 7 and No. 5 can be pulled from carrier.

C. To Reassemble Axle and Carrier Reverse Operations Followed in Disassembly.
   CAUTIONS:
   1. Before assembly inspect bearings and seals and replace any that have been damaged.
   2. Timken bearings No. 7 should be adjusted before carrier is assembled to transmission. Bearings are adjusted by assembling cap to housing with two capscrews opposite each other. Pull up capscrews until outer bearing race No. 7 is tight against bearing cone. After tightening capscrews check axle shaft to be sure there is no endplay. Determine number of shims by inserting between cap and housing. Add one .007" shim and put shims in place.
   3. When replacing No. 8 shims be sure to get the same number of shims of the same thickness in both halves.
   4. Shellac flange and shoudler of No. 15 cap before replacing.

D. NOTE: If both axles are to be removed, take off transmission top cover and support bull gear before pulling second axle carrier.

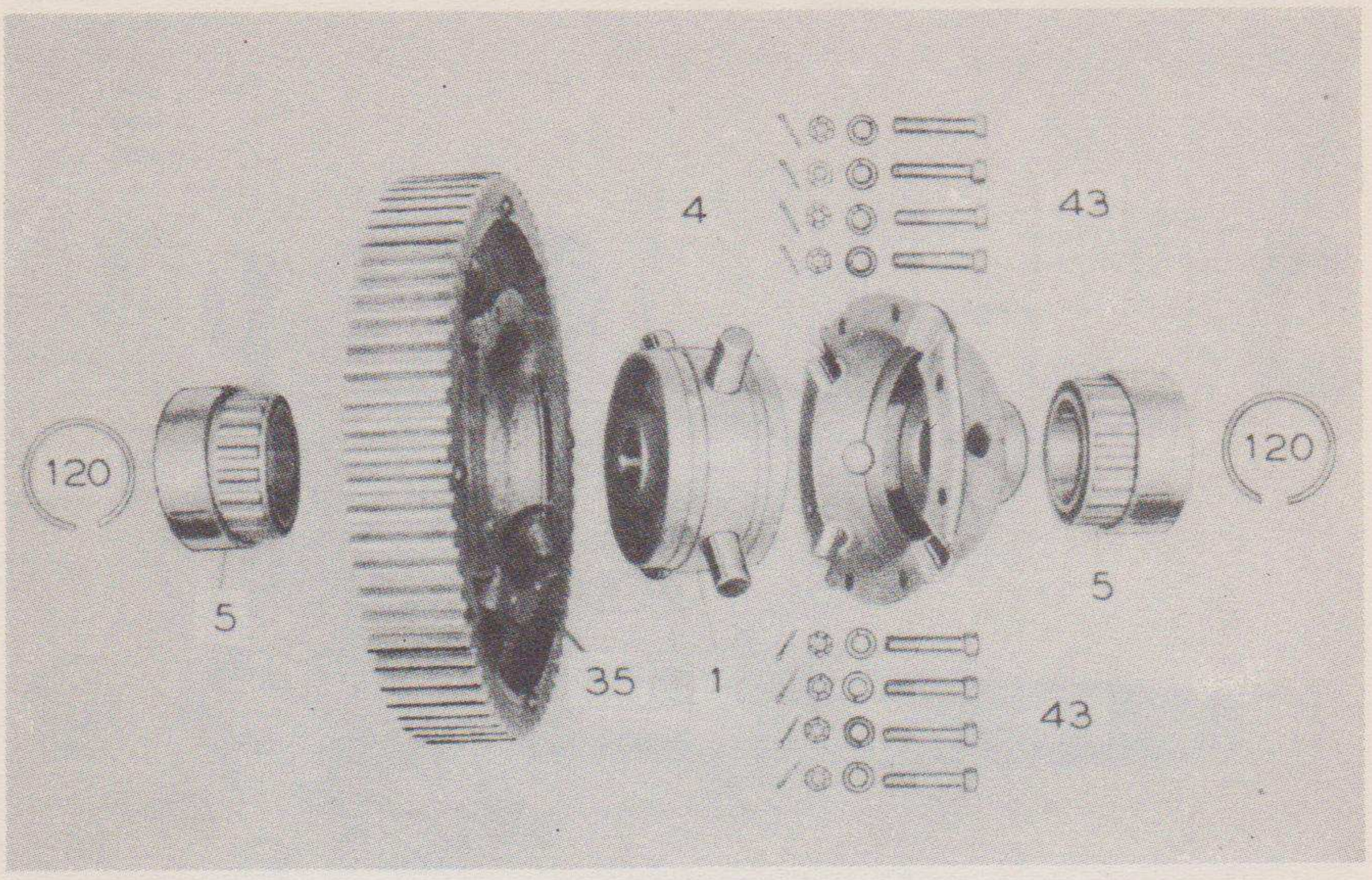

Fig. 11—Bull Gear and Differential Housing Assembly

TRANSMISSION REAR COMPARTMENT

A. To Remove Bull Gear Assembly. (See Figures 9 and 11)
1. Remove transmission top cover.
2. Remove both axle housings as instructed under Rear Axles.
(NOTE: Be sure to support bull gear before pulling both rear axle carriers.)
3. Shift left shifter rail forward.
4. The bull gear can now be lifted from the transmission case.

B. To Disassemble Differential Housing.
1. Remove No. 43 Differential Housing Bolts.
2. Housing can then be split and No. 1 differential lock hub assembly can be lifted out.
(NOTE: Do not attempt to disassemble bull gear from right differential housing as bull gears are selected at factory, for proper shrink fit.)
3. Bearings can be pulled off housings by first removing snap rings from outer ends of differential housing hubs.

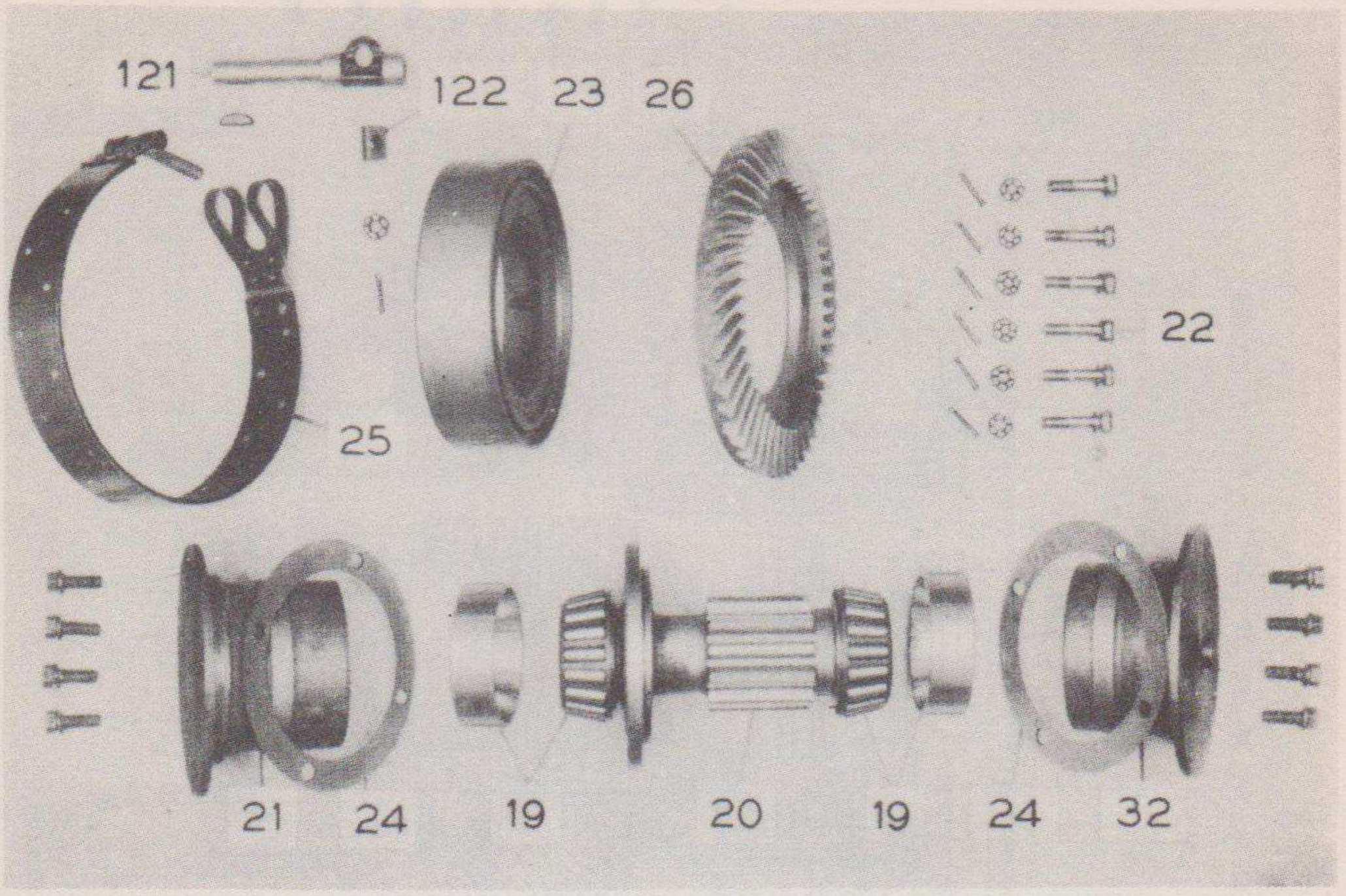

Fig. 12—Bull Pinion Shaft

C. To Remove Bull Pinion Shaft Assembly. (See Figures 9 and 12)
   1. Remove brake band adjusting nut and No. 122 wedge block.
   2. Remove Woodruff Key from outer end of No. 121 brake lever and pull shaft out of loops on end of brake band toward inside of case.
   3. Brake band can now be rolled off brake drum.
   4. Remove No. 21 and No. 32 bearing caps.
   5. The bull pinion shaft assembly can now be lifted out of the transmission.
   6. By removing No. 22 bevel gear bolts, the No. 23 brake drums and No. 26 bevel gear can be removed from the shaft.

D. To Reassemble Transmission Rear Compartment Reverse Operations Followed in Disassembly.

   NOTE: In reassembling bull pinion shaft into the case adjust the bearings so that 10 to 15 pounds of pull at O.D. of bevel gear is required to turn the assembly. Then adjust bevel gear to .008 to .010 backlash by shifting No. 24 shims from one side to the other.

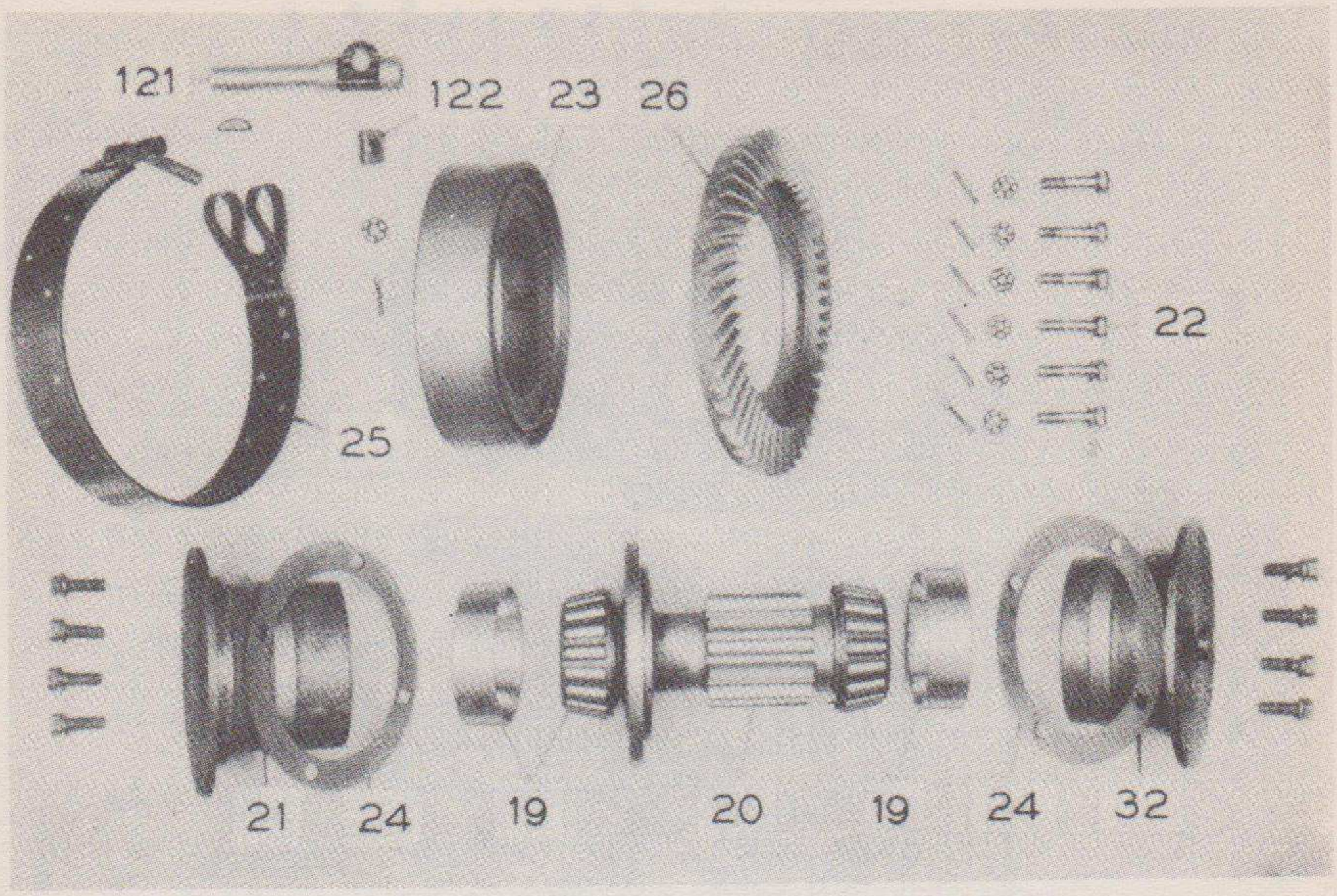

Fig. 12—Bull Pinion Shaft

C. To Remove Bull Pinion Shaft Assembly. (See Figures 9 and 12)
   1. Remove brake band adjusting nut and No. 122 wedge block.
   2. Remove Woodruff Key from outer end of No. 121 brake lever and pull shaft out of loops on end of brake band toward inside of case.
   3. Brake band can now be rolled off brake drum.
   4. Remove No. 21 and No. 32 bearing caps.
   5. The bull pinion shaft assembly can now be lifted out of the transmission.
   6. By removing No. 22 bevel gear bolts, the No. 23 brake drums and No. 26 bevel gear can be removed from the shaft.

D. To Reassemble Transmission Rear Compartment Reverse Operations Followed in Disassembly.

   NOTE: In reassembling bull pinion shaft into the case adjust the bearings so that 10 to 15 pounds of pull at O.D. of bevel gear is required to turn the assembly. Then adjust bevel gear to .008 to .010 backlash by shifting No. 24 shims from one side to the other.

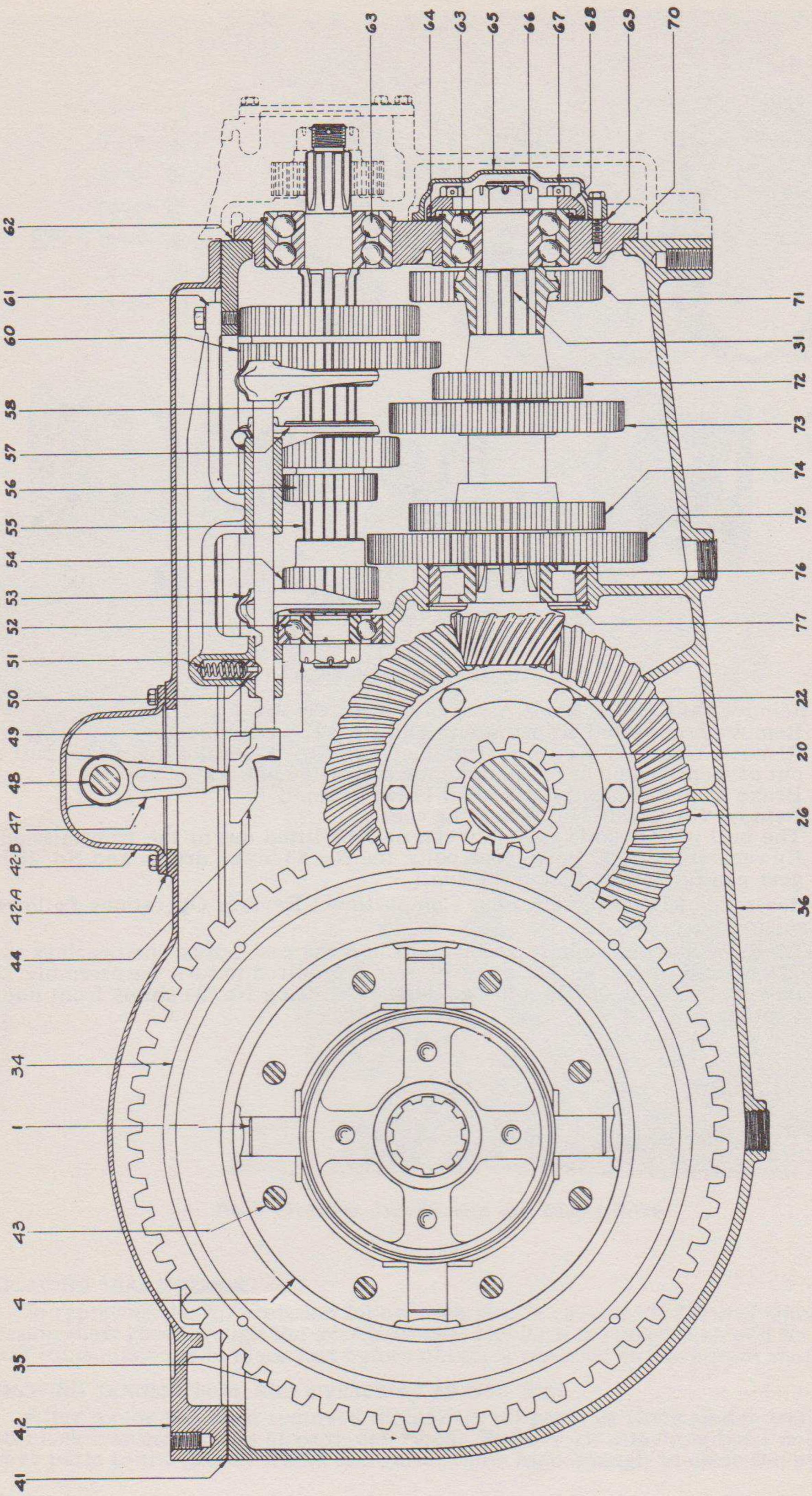

Fig. 13—Transmission Assembly

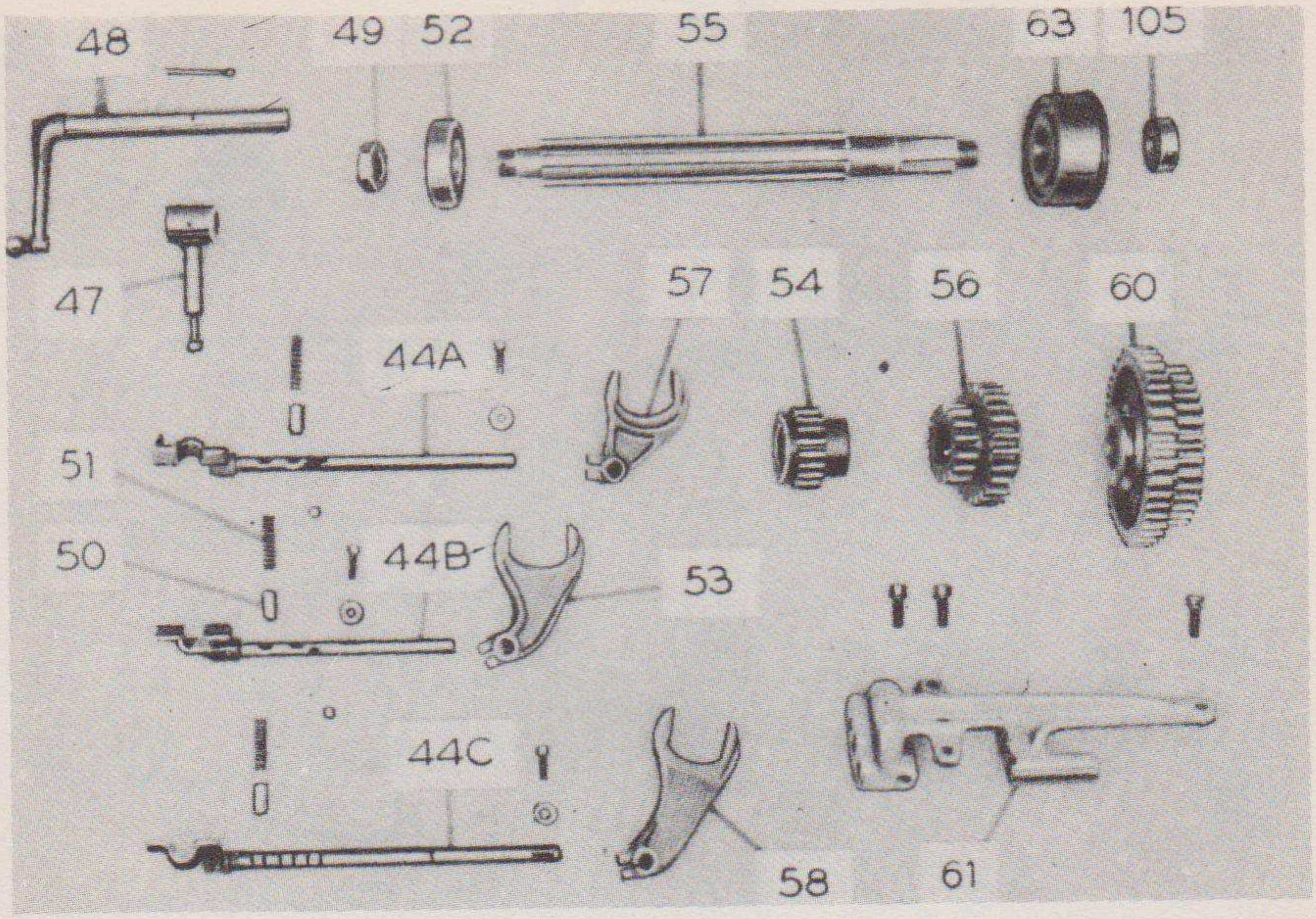

Fig. 14—Shifter Mechanism and Top Transmission Shaft

TRANSMISSION FRONT COMPARTMENT

A. To Remove Shift Mechanism From Transmission Top Cover. (See Figures 13 and 14)
   1. Remove top transmission cover.
   2. Remove cotter pin from No. 47 gear shifter lever.
   3. Drive No. 47 lever off No. 48 shaft. (CAUTION: Be sure to remove Woodruff Key from No. 48 shaft before attempting to pull it out of the cover.)

B. To Remove Shift Mechanism From Transmission Case.
   1. Remove top transmission cover.
   2. Shift No. 54 transmission sliding gear into mesh with mating gear.
   3. The shift assembly can now be lifted out by removing the three capscrews which secure the shifter assembly to the transmission case.

C. To Disassemble Shifter Assembly.
   1. Shift No. 44B center rail to neutral.
   2. Remove No. 57, 53, 58 shifter forks from rail by removing capscrews and round keys.
   3. Pull shifter rails out of No. 61 rod support.
   4. Shifter rail interlock balls will now fall out. Care should be taken that these balls are not lost.
      (CAUTION: Be careful so that poppets do not jump out forcibly causing injury or become lost.)
      NOTE: To reassemble reverse the above operations being careful to put interlock balls back between the rails.

D. To Disassemble Transmission Top Shaft.
   1. Remove transfer drive assembly as directed in "A" under Transfer Drive and drain Front Transmission Compartment.
   2. Remove shift assembly as directed in "C".
   3. Remove cotter and No. 49 nut from inner end of No. 55 shaft.
   4. Drive No. 52 bearing out through rear of case.
      (CAUTION: In driving out bearing use brass bar or punch and drive out inner race only as driving on outer race might injure bearing.)

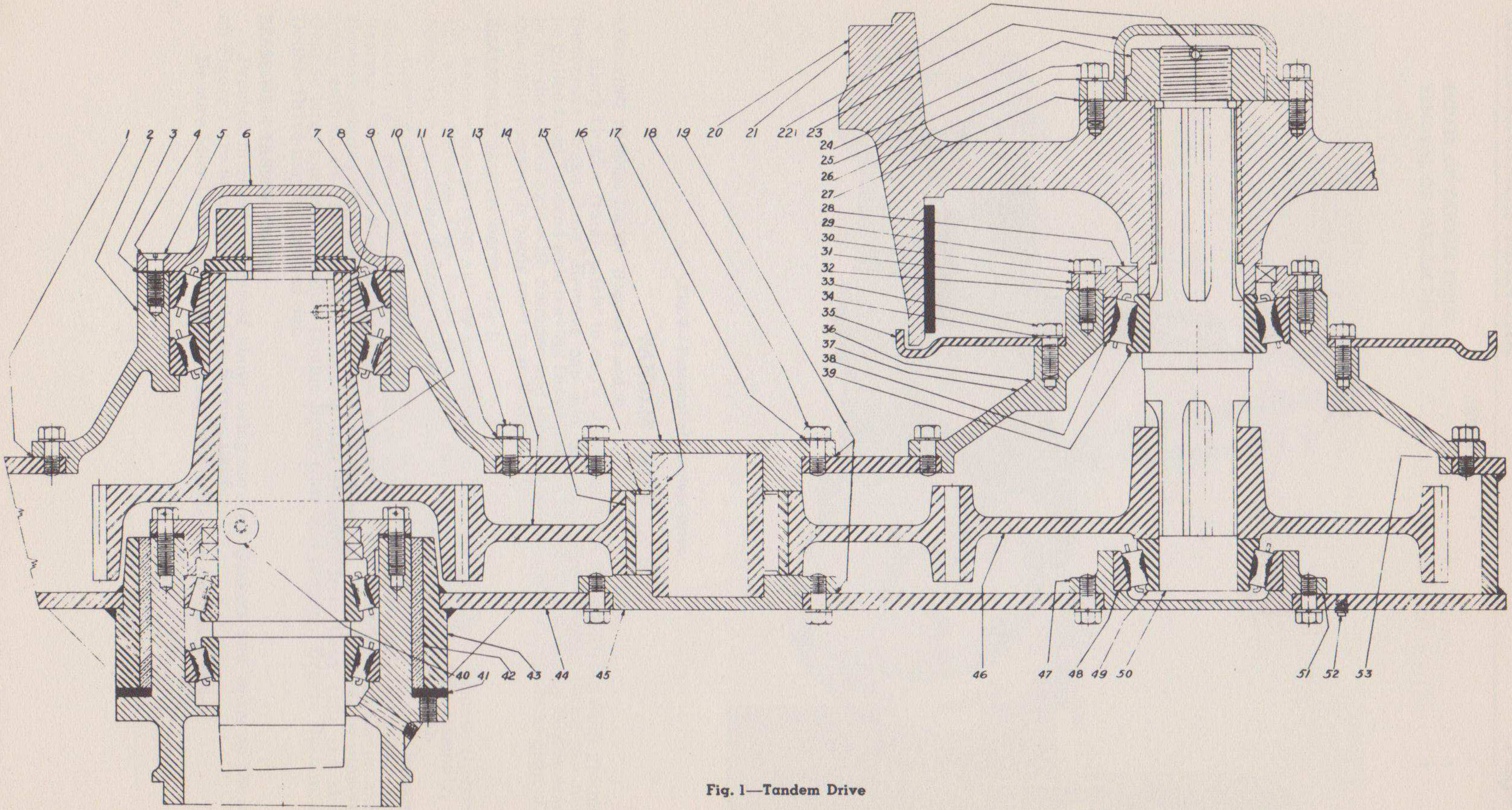

Fig. 1—Tandem Drive

INDEX

REPAIR OF TANDEM DRIVE..... 1
REMOVAL OF TANDEM DRIVE..... 1

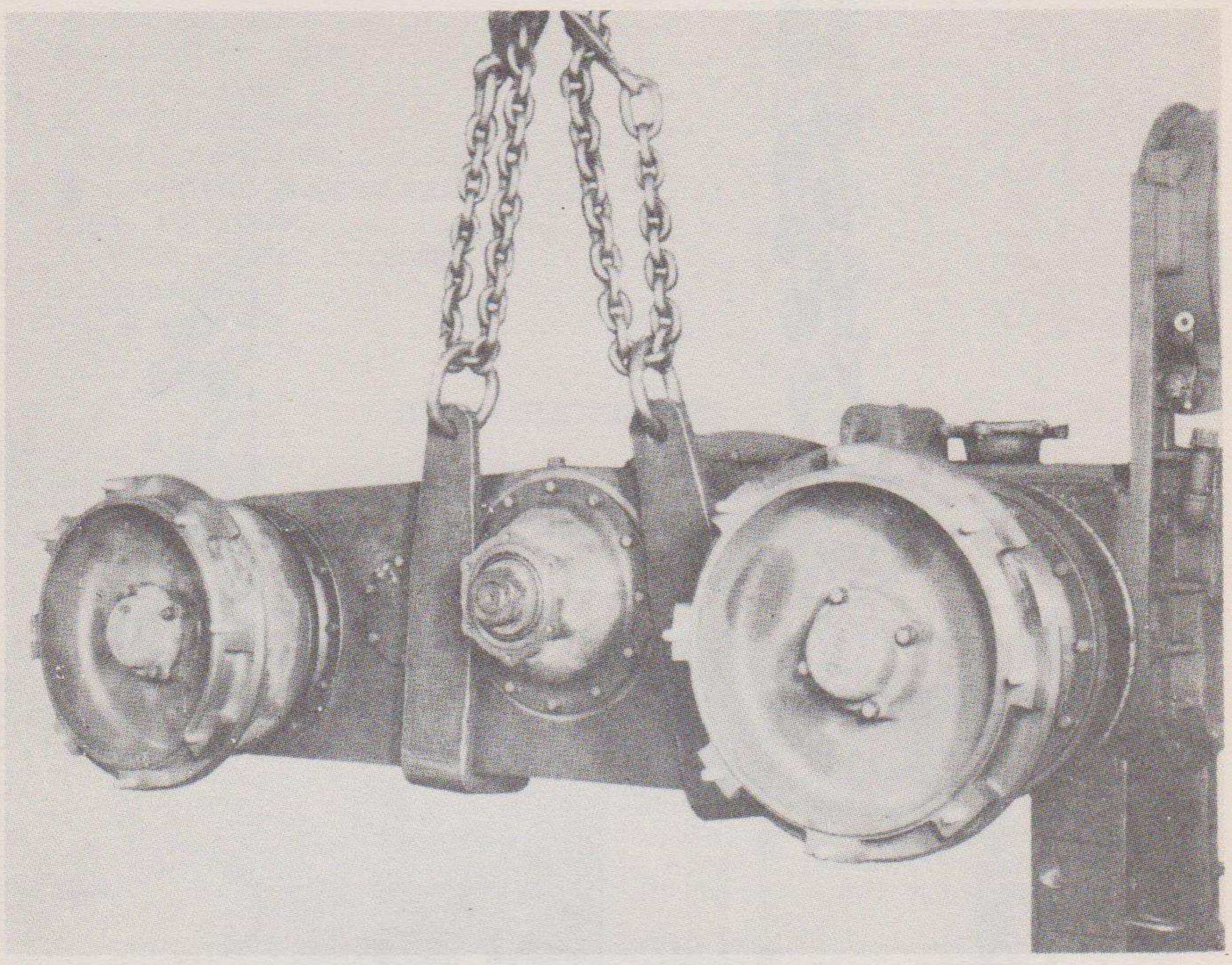

Fig. 2—Removal of Tandem Drive

TANDEM DRIVE

REMOVING TANDEM DRIVE* (Figures 2 and 3)

Block Grader frame safely to carry weight and lift Double Drive from ground. Disconnect Brake Hose. Remove cap and Nut and Lock. Double Drive can now be pulled from Tapered axle leaving Drive Gear in Double Drive. It may be necessary to tap the end of axle with hammer and block of wood to loosen axle from gear. Do this while pressure is being used to pull Double Drive.

DISASSEMBLE TANDEM DRIVE* (Fig. 1)

Remove wheels from axle by removing Hub Cap and Axle Nut. Remove Housing (2) which includes Main Drive Gear and Bearing. Disassemble this assembly, if necessary, by pressing Bearing and Races out of Housing and off Gear Hub.

Remove retainer (31). Remove Brake assembly from rear housing. Remove Housing (37) and press Bearing Race out of housing. Remove axle with Gear and Bearing cone. Press Bearing cones from axle and remove Gear from Spline on axle. Remove retainer (45) and pull from Shaft, after which, retainer (15) can be removed along with Shaft (16). Remove Bearing Roll assembly from Gear (12) and slide Gear to large opening at end of Double Drive Case and remove. Bronze Bushing in Double Drive may be pressed out.

REASSEMBLE TANDEM DRIVE*

Proceed in reverse order of above being sure all Gaskets and Seals as shown on Figure 1 are in place and all Cap Screws tight.

Be sure Idler Gear is free in assembly, otherwise add necessary shims.

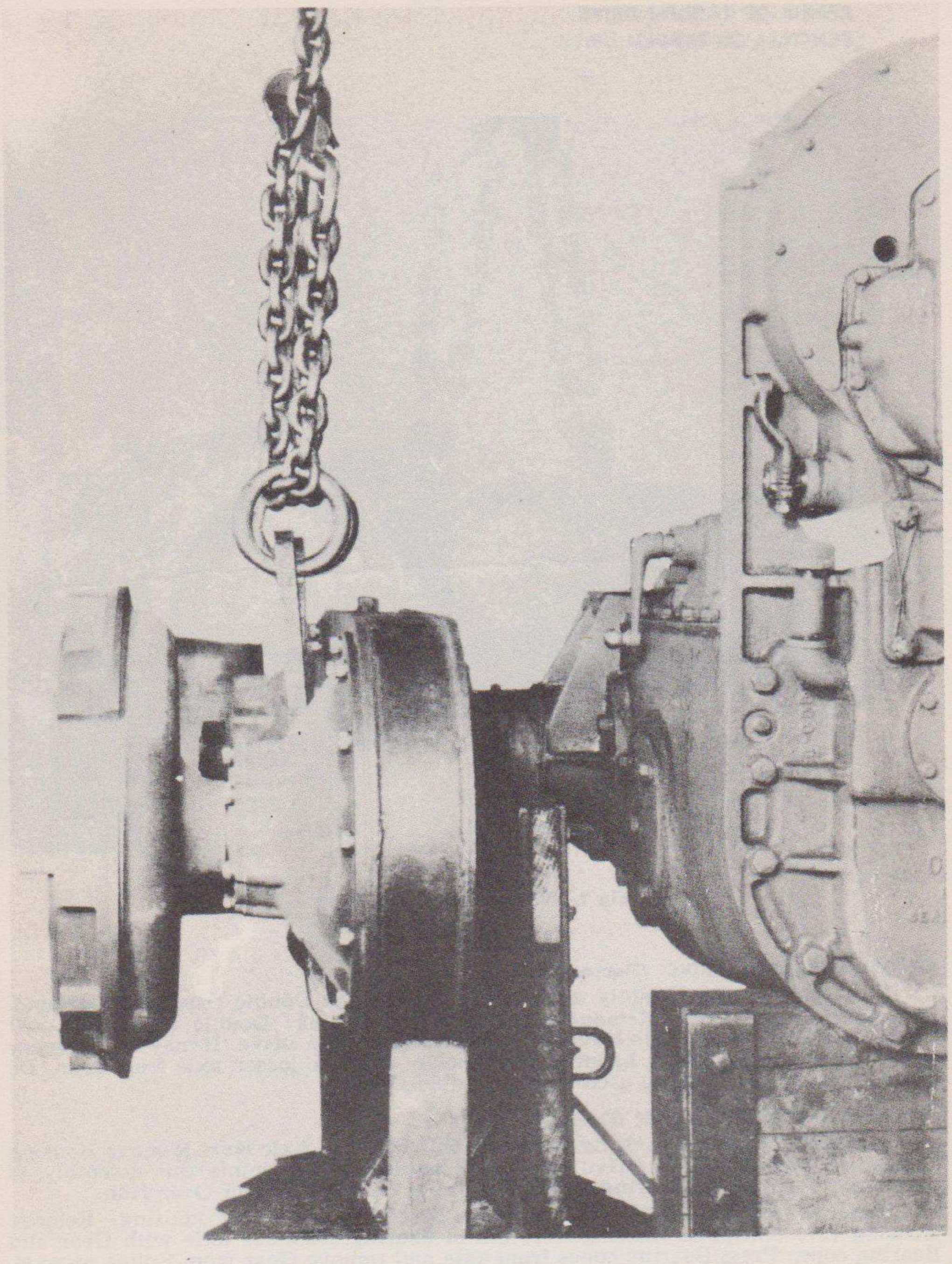

Fig. 3

Adjust all Timken Bearings so they are snug but still free to turn without undue drag. If the Bearings are too tight, the shaft or Gear cannot be turned by hand. If Bearings are too loose, thrust will be felt on the shaft or gear when moving it side ways or lengthwise.

Care should be taken in replacing wheel on axle, that Oil Seal (28) is not damaged. Mark all parts when disassembling to be sure they are assembled in proper position.

After machine has been in operation for a few weeks it is advisable to again tighten the 4 wheel axle nuts.

INDEX

BLEEDING BRAKE SYSTEM 4
BRAKE ADJUSTMENT 3
BRAKE DRUMS 3
BRAKE INSPECTION 3
BRAKE PEDAL TESTS 5
DISMANTLE CYLINDER 1
HYDRAULIC FLUID 1
MAINTENANCE HINTS 5
MAJOR ADJUSTMENTS 4
MASTER CYLINDER CHECK VALVE 1
PEDAL ADJUSTMENT 3
SERVICING MASTER CYLINDER 1
SHOE REMOVAL 2
WHEEL CYLINDER 2

HYDRAULIC BRAKES

HYDRAULIC FLUID

Always use Genuine Wagner Lockheed Brake fluid. The use of other substitutes or the introduction of mineral base oil into the system will cause rubber parts to swell and become inoperative.

MASTER CYLINDER CHECK VALVE

All master cylinders employ a double check valve held in the closed end of the cylinder by the piston cup return spring. The function of this valve is to seal the cylinder to prevent air entering the system during the bleeding operation. The construction of this valve is such that fluid may be displaced into the line at very low pressure.

Fluid passed through the valve on the pressure stroke can return into the master cylinder by raising the entire valve from its seat. When pressure on the returning fluid drops to below 6 to 8 pounds, the spring pressure seats the valve and the system is held under a slight pressure which serves as a seal to prevent gravity seepage. This valve has no relation to pedal movement. Do not try to improve pedal reserve by changing the valve.

Fluid under pressure passes through the drilled holes in cage and by the lip of the cup. Fluid returned from the lines presses the cup against the cage, sealing the drilled holes and raising the valve assembly from its seat.

SERVICING BOX TYPE MASTER CYLINDER

Fluid reservoir and master cylinder are two separate units bolted together. The cylinder is submerged in the fluid and the piston is operated through a lever within the reservoir. This lever is supported and actuated by a shaft extending through the reservoir. An external lever is used to connect the shaft with the brake pedal linkage. A shaft seal is provided where shaft extends through reservoir and is located in a recessed groove at the end of the shaft boss.

The cylinder unit may be reconditioned without removing the complete assembly from the grader. Drain fluid from reservoir by removing drain plug. Disconnect lines at cylinder. Remove cylinder head retaining cap screws and cylinder may then be removed from reservoir.

TO DISMANTLE CYLINDER (Fig. 1)

With cylinder (6) removed from reservoir, remove piston retaining stop wire (1) by pulling end of wire from hole in cylinder. Hold cylinder vertical. Piston (2), cup (3), return spring (4) and check valve (7) may be removed. To dismantle inside lever, remove reservoir cover. Clamp screw is removed from inside lever. Shaft and lever may be withdrawn.

After dismantling the cylinder the following items should be inspected.

A. Cylinder bore must be smooth and not pitted or scratched. The cylinder walls may be renewed by honing with FL-101 Hone Set. When honing a clyinder it is necessary to use FL-114 NoGo gauge to determine whether or not the diameter has been enlarged to a point where it cannot be used. FL-134 burring tool must be used after the honing operation to remove sharp edges on bypass port.

B. If mineral oil is present in the system the rubber parts will be enlarged and very soft. They cannot be used and it is necessary to replace the cup, check valve and shaft seal.

It is recommended that a master cylinder repair kit be used which includes all internal parts necessary to repair a master cylinder head and barrel assembly.

Cylinder and parts must be washed in clean alcohol and dipped in brake fluid before assembling. Do not wash cylinder or parts in gasoline, kerosene or oil.

Reassembly is done by reversing the dismantling operations.

WHEEL BRAKE UNITS

Wheel brake units are located within the drum and supported by backing plates. The wheel cylinder is mounted at the top of the backing plate and the anchor pins at the bottom of the plate.

GENERAL SHOE REMOVAL PRECAUTIONS

This applies to all types of shoes and should be the first step in the removal of shoes. Place wheel cylinder piston clamp over wheel cylinder boots on the cylinders. This will prevent loss of fluid and necessity for bleeding the lines when servicing the shoes. When wheel brake units are dismantled all frictional parts such as anchor pins, guide pins, and shoe guides should be sparingly lubricated.

CAST SHOE ASSEMBLY

The type shown in Figure 2, has each shoe anchored by and pivoting on an eccentric anchor pin. Guide pins act as supports and serve to prevent shoes from chattering and weaving off-center. The returned spring holds the shoes in contracted or released position. The connecting links connect the upper or toe end of the shoes to the wheel cylinder pistons. The stop pin supports the shoe against the adjusting cam in released position. C-washers are used on guide and anchor pins to hold shoes in position.

SHOE REMOVAL (Fig. 2)

Place clamp across wheel cylinder boots. Remove C-washers from anchor pins and guide pins. Unhook shoe return spring. Swing brake shoes outward at top and remove wheel cylinder connecting links from spherical socket in pistons. Shoes may then be removed by lifting from guide and anchor pins. To assemble, reverse the forgoing operations.

STRAIGHT BORE TYPE (Wheel Cylinder)

The straight bore wheel cylinder has two opposed pistons. Each piston transfers hydraulic pressure into equal mechanical force, expanding the brake shoes to which it is connected into contact with the brake drum.

The cylinder has two boots to protect the internals from foreign matter, two pistons which are connected to the brake shoes, two cups which seal the cylinder, one spring, one inlet fitting which is the means of connecting the cylinder to the system and one bleeder screw used in expelling air from the system.

TO REMOVE CYLINDER

Disconnect tubing or hose at wheel cylinder inlet, unhook brake shoe return spring. Remove two cap screws which hold cylinder to the backing plate and cylinder may then be withdrawn for inspection. CAUTION—Prevent brake fluid from coming in contact with brake linings either by dripping or from soiled hands.

TO DISMANTLE CYLINDER (Fig. 3)

Remove boots (4 and 8) from cylinder casting. Pistons (3 and 7), cups (5 and 9), and springs (2) may then be removed. Remove bleeder screw (6).

After dismantling inspect for the following:

A. If mineral oil is present in the system the rubber cups will be enlarged and very soft. They cannot be used and it is necessary to discard.

B. Cylinder walls must be smooth and not pitted nor scratched. The cylinder walls may be renewed by honing with FL-101 Hone Set. When honing a cylinder it is necessary to use FL-114 No-Go gauge to determine whether the diameter has been enlarged to a point where the casting cannot be used.

C. Pistons must be free from burrs.

D. Occasionally grease retainers become worn allowing the grease from the wheel bearings to leak through into the brake drum. When grease comes into contact with the rubber boots they become soft and enlarged, preventing them from protecting the cylinder from foreign matter If this occurs replace boots and grease retainer.

It is recommended that in repairing a wheel cylinder, a wheel cylinder repair kit be used which includes all necessary parts.

Cylinder and parts must be washed in clean alcohol and dipped in Wagner-Lockheed brake fluid before assembling. Do not wash cylinder or parts in gasoline, kerosene or oil.

BRAKE ADJUSTMENTS—GENERAL

All Lockheed Brakes have provisions for minor and major adjustments. Minor adjustment compensates for lining wear. Major adjustment becomes necessary when a minor adjustment will not provide a satisfactory brake or when brakes have been dismantled, shoes relined or replaced. Also when drums have been reconditioned. A satisfactory adjustment cannot be obtained when linings are worn to rivet heads, brake drums are scored, eccentric or bell-mouth.

Never replace or reline shoes on one wheel only as it is of utmost importance that linings on both wheels have the same coefficient of friction, otherwise unequal brakes will result.

Adjustments provided on Lockheed hydraulic brakes are described in the following paragraphs.

BRAKE INSPECTION

Check fluid level in master cylinder, making sure that all dirt is removed from around filler plug to prevent entrance to cylinder pressure reservoir. Lever should be ½" from reservoir top or cover. Check pedal to make certain it has free play or lash before pressure stroke starts.

Check pedal for binding on shaft or against frame—lubricate if necessary. A mixture of engine oil and graphite is usually satisfactory for pedal mounting and rod clevises. Be sure pedal returns sharply to "off" position; if not, check and replace pedal return spring. Check rear wheel bearing adjustment; brakes cannot be adjusted properly when bearings are loose—shoes will not remain centralized in the drum. Always pull at least one wheel for inspection for average condition of linings and drums. Backing plate must be tight to provide rigid support for the brakes. Loose or sprung backing plate will be evident by drum not being equally spaced to backing plate at all points around the drum, assuming axle shaft is not sprung and rear wheel bearings are properly adjusted.

Inspect condition of rear grease retainers as seepage of grease through grease retainer will make it necessary to replace lining.

Major adjustment should include pulling rear double drive wheels. Clean drums thoroughly, using kerosene and sandpaper. Clean entire brake assembly thoroughly.

If lining is loose, badly worn, or grease soaked, it must be replaced. Lining is considered worn and replacement necessary when rivet heads are within 1/32" from lining face. When assembling, lubricate all frictional contact points sparingly.

BRAKE PEDAL ADJUSTMENT

Proper pedal adjustment is important, otherwise the compensating feature of the master cylinder cannot function. Fluid cannot return from the lines. Brakes will drag after several applications if master cylinder port is blocked.

It is imperative that master cylinder piston be against its stop and that pedal link rod be adjusted for clearance between the pedal and master cylinder control arm. There should be at least ¼" to ½" free play or lash in pedal before the pressure stroke starts. Greater free play or lash reduces the effective travel of master cylinder piston which in turn reduces brake efficiency.

Pedal reserve should be approximately half of the total pedal travel.

If pedal is found spongy or not solid, this is an indication of air in the system and the brakes should be bled.

ADJUSTMENT FOR BOX TYPE MASTER CYLINDER

Pedal adjustment is made as follows: Remove clevis pin from clevis on pedal rod at master cylinder end.

Locate lever on outside of cylinder so that it crosses an imaginary vertical centerline at two-thirds of its actual stroke. Adjust pedal stop screw to provide ½" play at pedal pad. Loosen locknut at cylinder end of pedal connecting rod. Adjust length of rod so that with clevis connected to lever, pedal pad will have ½" free travel before pressure stroke starts. This provides the best pedal adjustment.

BRAKE DRUMS

Brake drum must provide complete frictional surface for lining contact. The braking surface must be true radially, smooth, and free from grooves, and flat from

side to side. New linings applied to a worn drum or otherwise not true, reduce the lining contact.

Brake surface should be smooth and free from checks. The maximum limit for drum eccentricity for Lockheed Hydraulic brakes is plus or minus .005" indicator reading.

Eccentric or bell mouthed drums make it impossible to equalize brakes, and prevents obtaining full lining contact.

These drum conditions can be checked by the use of dial indicators, drum gauge or other specialized measuring devices.

MINOR SHOE ADJUSTMENT

This adjustment is intended to compensate for normal lining wear and is made in the same manner on all types of wheel brake units. Lining wear is indicated by pedal going almost to floorboard, reducing brake effectiveness and requiring adjustment to re-establish pedal position.

Adjust lining clearance by rotating the cam adjustment toward rim of wheel with wrench pointing upward. This brings the shoe into closer contact with the drum. Use feeler gauges in slotted backing plate. Four slots are provided in each back plate for adjustment. Shoe is adjusted to .005" clearance at the lower end of the shoe and .010" at the upper end.

Adjust the adjusting cam until feeler gauges are snug between lining and brake drum. Repeat this operation at each wheel brake.

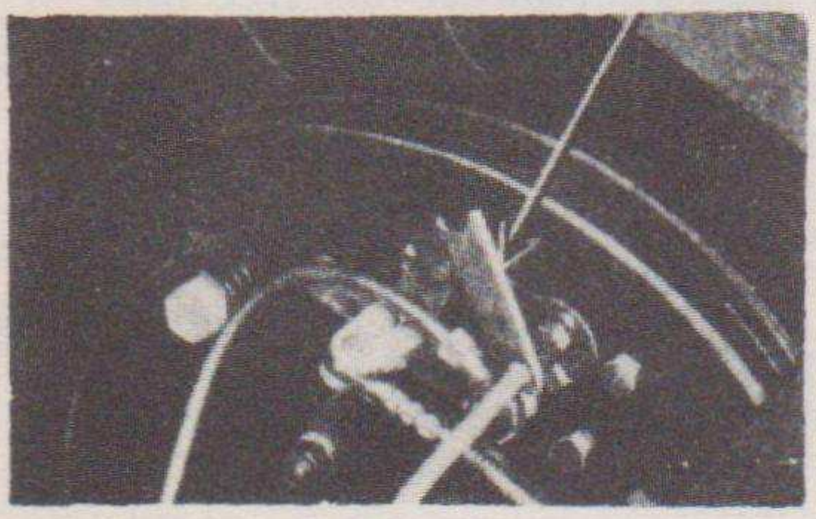

Bleeder Screw Location

MAJOR ADJUSTMENT

When brake shoes are relined or in cases where a minor adjustment will not re-establish the proper pedal reserve, it is necessary to adjust the eccentric anchor pins to correct the relation of the brake shoe arc to the contour of the drum.

Block up rear of Grader being careful the blocking is sufficient to carry weight safely and remove rear double drive wheels. Loosen anchor pin locknut on inside of backing plate. Adjust anchor pin and adjusting cam until feeler gauges are snug between lining and drum. Tighten anchor pin locknut. Repeat this operation on each shoe in each wheel. After making adjustment on anchor pin, replace wheel and check with feeler gauges as shown under minor adjustment.

BLEEDING THE HYDRAULIC SYSTEM

Since the proper operation of the hydraulic brake system requires a "solid column" of fluid (without air bubbles) at all points in the pressure system—it becomes necessary under certain conditions to "bleed" fluid from the system in order to expell air bubbles which have become mixed with the fluid. The necessity of bleeding is indicated by a soft or spongy pedal.

REASONS FOR BLEEDING

1. When a wheel cylinder, master cylinder, hose, pipe line, or any part of the system has been broken or disconnected, allowing air to enter.
2. When air has been drawn into some part of the system through neglect or misadjustment such as:
   a. Air drawn into master cylinder around a worn master cylinder secondary cup.
   b. Air drawn into rear wheel cylinders.
   c. Improper fluid level in master cylinder.
3. When brakes have been adjusted too tight causing overheating and boiling or gassing of the brake fluid.
4. When, after proper mechanical adjustment of all brake shoes, the brake pedal feels spongy, indicating presence of air in the system.
5. When it becomes necessary to replace fluid.

MANUAL BLEEDING

Care must also be taken not to drain the master cylinder reservoir during this operation, otherwise, air will enter and make "re-bleeding" necessary. Reservoir must be full during the bleeding operation.

Remove cap screw from bleeder connection.

Loosen bleeder screw one full turn and depress the brake pedal slowly, then allow pedal to return to the "off" position. Repeat this operation approximately ten times, which provides a pumping action to force fluid through the lines and expelling all air. This operation must be repeated at both wheels to bleed the entire system.

Watch flow from bleeder connection. When air bubbles cease to appear, or when the stream is a clean solid mass, close bleeder connection.

BRAKE PEDAL TESTS

Following are a few practical tests which can be made by any mechanic. Going through these, will after some experience, enable the mechanic to diagnose quite a few of the ordinary service problems on the hydraulic brake system.

1. Get in driver's seat in cab and push on brake pedal to determine (a) if brake will apply; (b) if there is at least a 2" "reserve" before pedal strikes floorboards; (c) if pedal goes to floorboards try "pumping" to see if it will "build up"; (d) if pressure can be built up, hold down hard to see if pressure will leak off; (e) after holding ½ minute, reduce pressure on foot without releasing pedal and then press fairly lightly to see if pedal "leaks down" under light pressure—this test will reveal a master cylinder cup which is thin and permitting pressure to leak off or "by-pass" within the master cylinder and without showing signs of leaking on the outside of the master cylinder.
2. If pedal goes to floorboard and cannot be built up by pumping (pushing down several times in rapid succession)—then determine whether master cylinder is full of fluid.
3. If fluid level is low in master cylinder, refill with Lockheed fluid and again make the foregoing pedal tests.
4. If the fluid is OK in the master cylinder and the pedal can be "pumped up"—proceed with "Minor Brake Adjustment."
5. If master cylinder fluid level is found low or master cylinder reserve tank is empty—refill and then before making pedal tests inspect master cylinder for any external signs of leakage. Where accessible, feel the master cylinder boot to determine if wet with brake fluid; squeeze boot with fingers, if fluid is expelled around or through boot, it is an indication that the master cylinder is leaking and should be removed, inspected, repaired or replaced.
6. If no evidence of leaks are apparent at the master cylinder—inspect all fluid lines along the frame, all hose and hose connections, the bottom edges of all brake flanges and the inner side wall of tires for signs of brake fluid leakage. If no external signs of leaks are found, but pedal still leaks off under pressure, pull both brake wheels and inspect the wheel cylinders.
7. If no external fluid losses are found but pedal "eases down" under constant but light foot pressure—it is a fairly good indication that pressure is "by-passing" within the master cylinder, in which case remove and repair or replace.
8. If pedal has a "springy" feel—this is usually evidence that the brake shoes are improperly set or have been relined with incorrect thickness of lining. Improper brake shoe setting would indicate need of a major brake adjustment. Before making a decision on this type of condition it is well to road test the grader to determine if you have a "hard" pedal and a "poor" stop. After road test it will be best to pull wheels, check lining thickness, contact, drum condition, fit of shoes to drum and anchor adjustment to determine exact cause of difficulty.
9. If pedal has a "spongy" feel it is usually evidence of air in the hydraulic brake system which condition can be eliminated by "bleeding."
10. If pedal "jams" or binds, check for mechanical interferences, also check to see if piston stop wire in master cylinder is broken; also check master cylinder mountings and linkage.

MAINTENANCE HINTS

No. 1. Pedal Goes to Floorboard

CAUSE

a—Normal wear of lining.
b—Brake shoes not properly adjusted.
c—Leak in system.
d—Air in system.
e—Pedal improperly set.
f—No fluid in supply tank.

990620 O—52——19

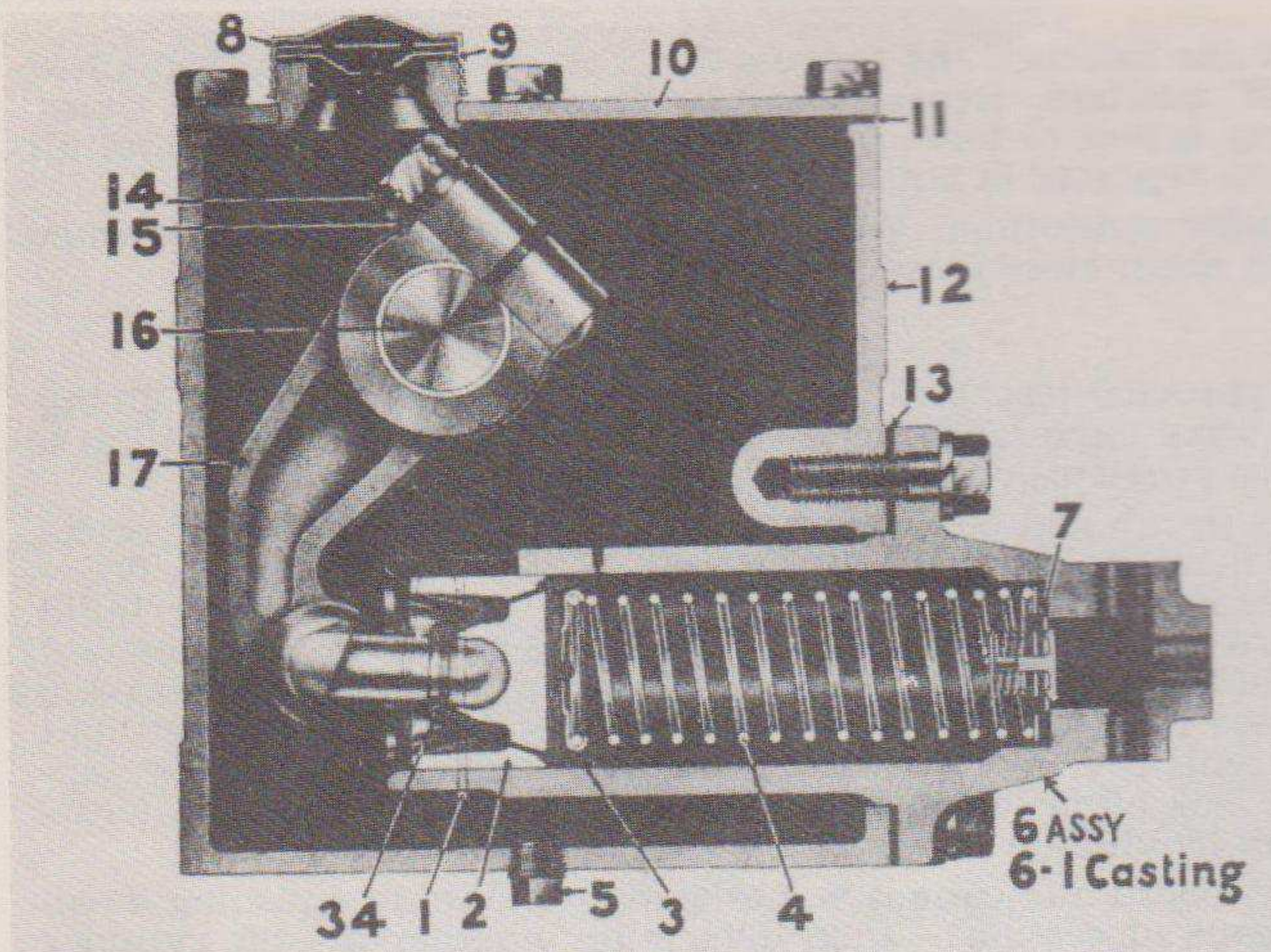

Fig. 1—Box Type

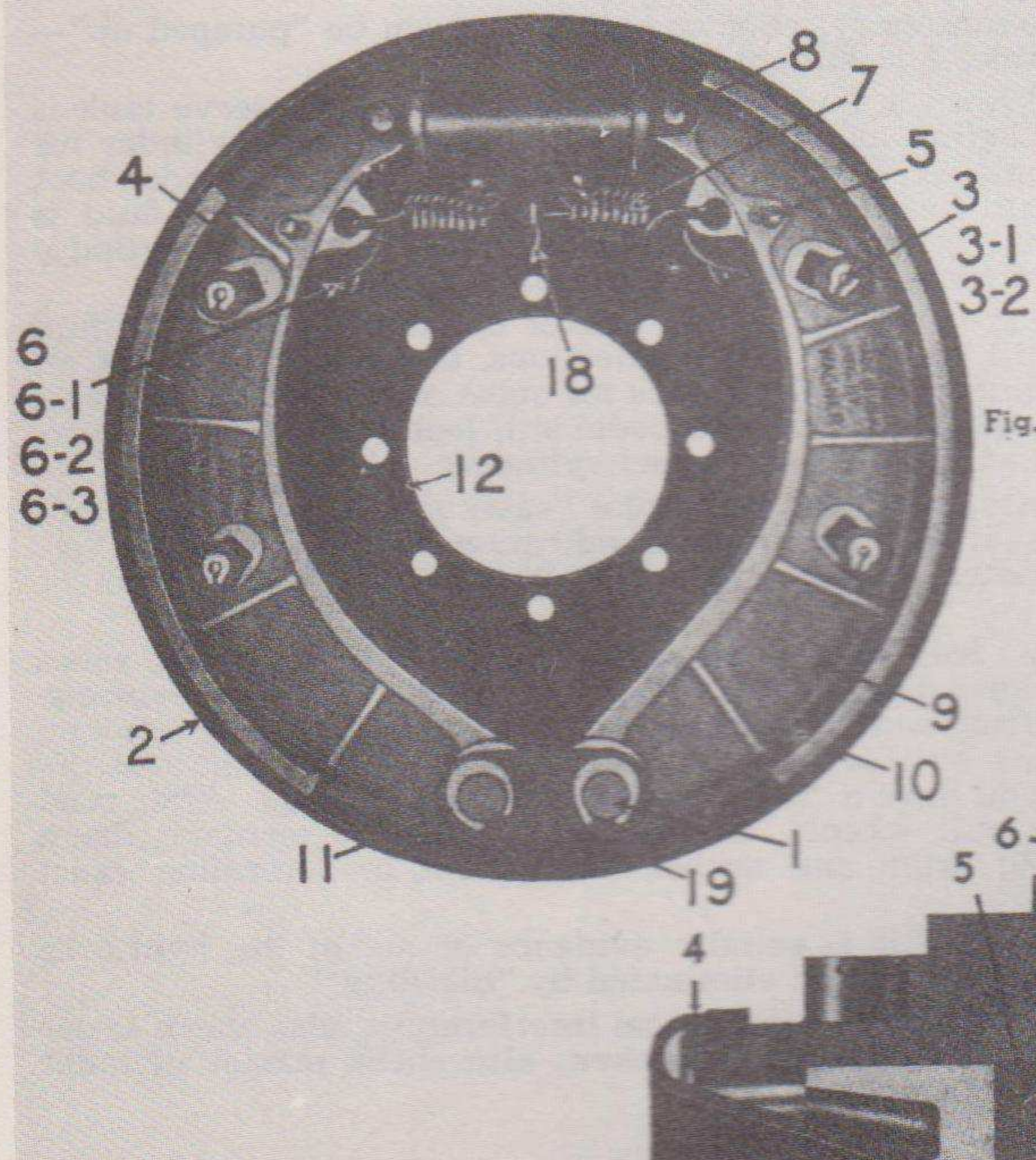

Fig. 2—Wheel Brake Assy. (Cast Shoes)

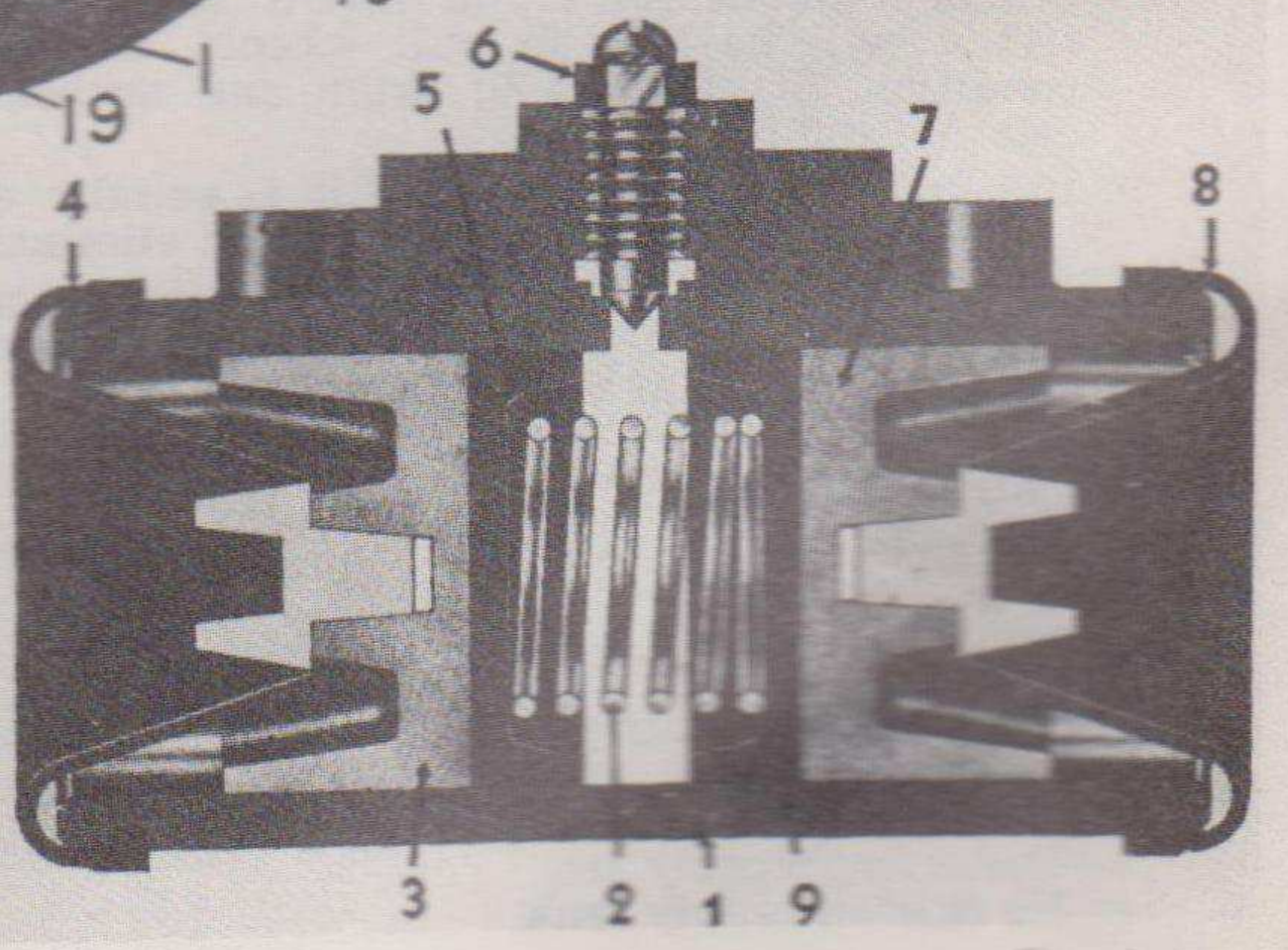

Fig. 3—Wheel Cylinder (Straight Bore)

REMEDY

a—When brake linings become worn it is necessary to set the shoes into closer relation to brake drums. This condition is usually accompanied by the remark that it is necessary to pump the pedal several times before a brake is obtained. Shoes should be set as close to brake drum as possible without drag. Do not disturb anchor pins making this adjustment. Adjustment must be made while drums are cool.

b—In cases where the eccentric anchor pins have been disturbed and the relation of the arc of the shoes to drums changed, so the heel or lower lined section of shoe is engaging the drum while the toe or upper section of shoe remains out of contact, a tendency to spring the shoes and distort drums will result and the pedal movement necessary will allow pedal to go to floorboard. Shoes should be readjusted.

c—A leak in the system will allow the pedal, under pressure to go to the floorboard gradually. If no leaks are found at wheels or joints, remove master cylinder and check bore of barrel for scores or scratches.

d—Air in the system will cause a springy, rubbery action of the pedal. Should a sufficient quantity be introduced into the system, the pedal will go to floorboard under normal pressure. System should be bled.

e—Brake pedals should be set with approximately ½" free motion before the pressure stroke starts. Additional free motion reduces the active travel of the master cylinder piston, which in turn limits the amount of working fluid to be expelled from the master cylinder into the lines or system.

f—The fluid level in the supply tank should be checked at regular intervals. Should the tank become empty, air will be introduced into the system, necessitating bleeding.

No. 2. All Brakes Drag

CAUSE

a—Mineral oil in system.
b—Pedal improperly set.

REMEDY

a—The introduction of mineral oil, such as engine oil, kerosene, or any fluid with a mineral base, into the system will cause the cups to swell and distort, making it necessary to replace all cups and flush system.

b—Directly ahead of the master cylinder cup (when in normal release position) is a relief port. It is imperative that this port be open when the brakes are released. Brake pedal should be set with ½ inch free movement before pressure stroke begins. Should this port be blocked by piston cup not returning to its proper release position, the pressure in the system will gradually build up and brakes drag. Opening a bleeder screw will allow built up pressure to escape and give temporary relief. Bleeder screw must be secure before grader is operated.

No. 3. One Wheel Drags

CAUSE

a—Weak brake shoe return spring.
b—Brake shoe bearing seized to anchor pin.
c—Brake shoe set too close to drum.
d—Cups distorted.
e—Loose wheel bearings.

REMEDY

a—Springs sometimes lose their contracting power and take a set. Replace spring.
b—Lubricate bearing at anchor pins.
c—Readjust shoes to proper clearance. Do not change anchor pin setting.

d—If in repairing wheel cylinders, kerosene, gasoline and other fluids are used as a cleaner, instead of alcohol, the cups will swell and distort. The return action of the shoes will be retarded and the brake drum will heat. Replace cups and wash unit in alcohol and dip all parts in fluid before reassembling.

e—Tighten bearings

No. 4. Pull to One Side

CAUSE

a—Grease-soaked lining.
b—Shoes improperly set.
c—Dust shield loose on axle.
d—Different makes of lining.
e—Tires not properly inflated.

REMEDY

a—replace with new lining of same make. Grease-soaked linings cannot be salvaged by washing or cleaning.

b—All manufacturers advocate a certain shoe setting. The average is .005 at the heel or lower end, and .010 clearance at the toe or upper part. Readjust the shoes to proper clearance. It will be necessary to use gauge and to shift anchor pin setting.

c—Loose shields permit the brake assembly to shift on the locating bolts. This shifting changes the predetermined centers and causes unequal efficiency. Tighten shields and readjust shoes with gauge.

d—Different makes of linings have different braking efficiency. Two different makes, one with high efficiency and one with low efficiency, would cause unequal efficiency.

No. 5. Excessive Pressure on Pedal, Poor Stop

CAUSE

a—Brake shoes not properly adjusted.
b—Brake pedal leverage wrong.
c—Improper lining.
d—Oil in lining.
e—Lining making partial contact.

REMEDY

a—Consult remedy B under No. 1.

b—Master cylinders of the box type which are mounted to the rear of the brake pedal are connected to same by pull or push rod. This rod is fastened to the master cylinder by means of an outside lever. The outside lever should be set so that at two-thirds of its active arc it is crossing an imaginary line drawn at right angles with the push or pull rod. A lever so set gives maximum leverage and piston travel.

c—Improper grades of brake lining lose their gripping qualities after a few thousand miles. As the frictional quality decreases, the pressure on the brake pedal is naturally increased to get the equivalent stop.

d—Clean or replace lining.

e—Remove high spots.

No. 7. Light Pressure on Pedal, Severe Brakes

CAUSE

a—Brake shoes not properly adjusted.
b—Loose dust shield on axles.
c—Grease-soaked lining.

REMEDY

a—Consult remedy B under No. 4.
b—Consult remedy C under No. 4.
c—Consult remedy A under No. 4.

BRAKE FLUID

The use of Genuine Lockheed Brake Fluid, compounded by Wagner Electric Corporation, assures owner of maximum performance. We recommend that no substitute be used.

Refer to Operator's Manual for EFSB L-1016 Chek-Chart Lubrication

INDEX

CAB—REPLACING GLASS 4
TIRE PUMP 1

MISCELLANEOUS

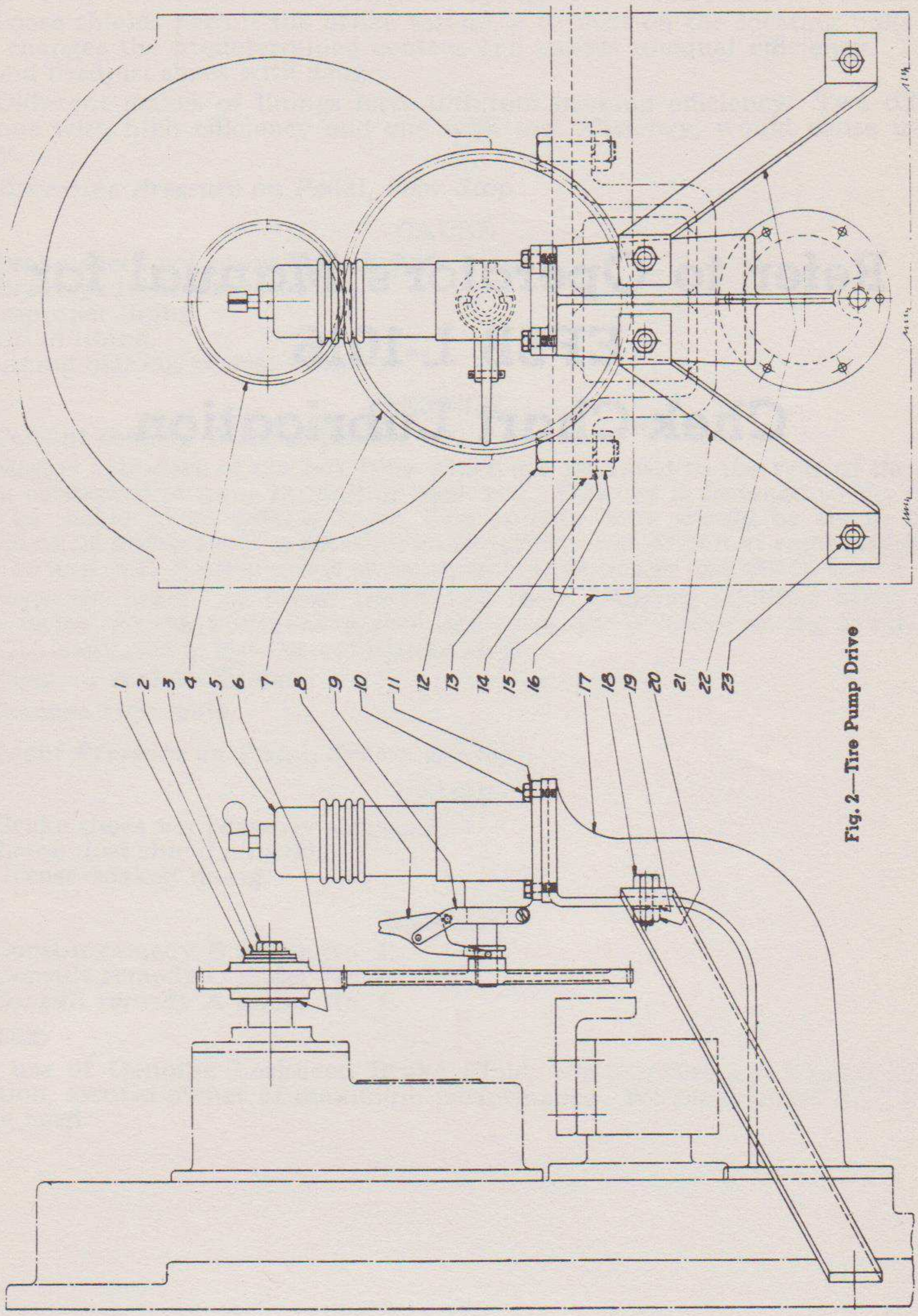

Fig. 2—Tire Pump Drive

TIRE PUMP

The tire pump is mounted on front of transfer case and is gear driven from transfer input shaft. Refer to Fig. 1. The tire pump drive gear should be disengaged when pump is not in use.

REPAIR OF TIRE PUMP (Figures 1 & 2)

After the unit has been removed from the Grader application remove valve retainer (4) which will enable you to take out the valve (7) and relap same on a

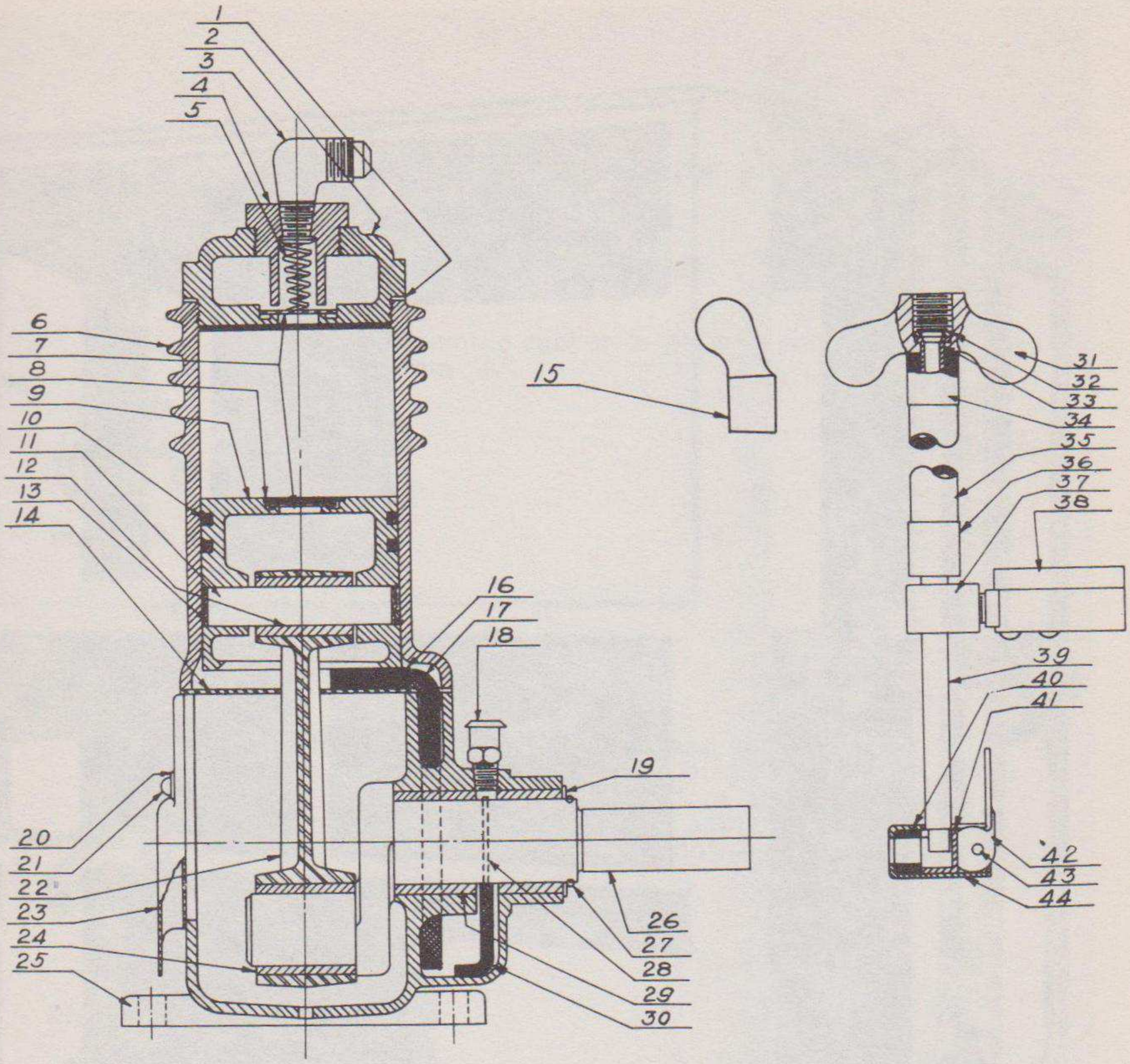

Fig. 2—Tire Pump

surface plate, after which this valve should be ground to the seat of head (2). With this completed replace valve and valve retainer (4) using pipe joint compound on the thread. If this valve has been leaking or not seating properly the pump should now be in good operating condition.

To remove the cylinder to assembly piston, valve and rings, first remove the four cap screws holding the cylinder to the base and lift the cylinder off the piston. Next, remove the cover screw (21). With these parts removed, the connecting rod can easily be slipped off the end of the crankshaft for examination and repair. Naturally with the piston and rod assembly in your hand you can remove the wrist pin if necessary, also the rings if they need to be replaced. All of these parts can be replaced after repair in the reverse order to that which they have been removed. Valve (7) in piston head should be ground to the seat in the piston head.

To remove the crankshaft, take off spring ring (27) which will allow washer (19) to come off the crankshaft. The crankshaft (26) can be removed through the end cover opening in the base and replaced after repair in the reverse manner.

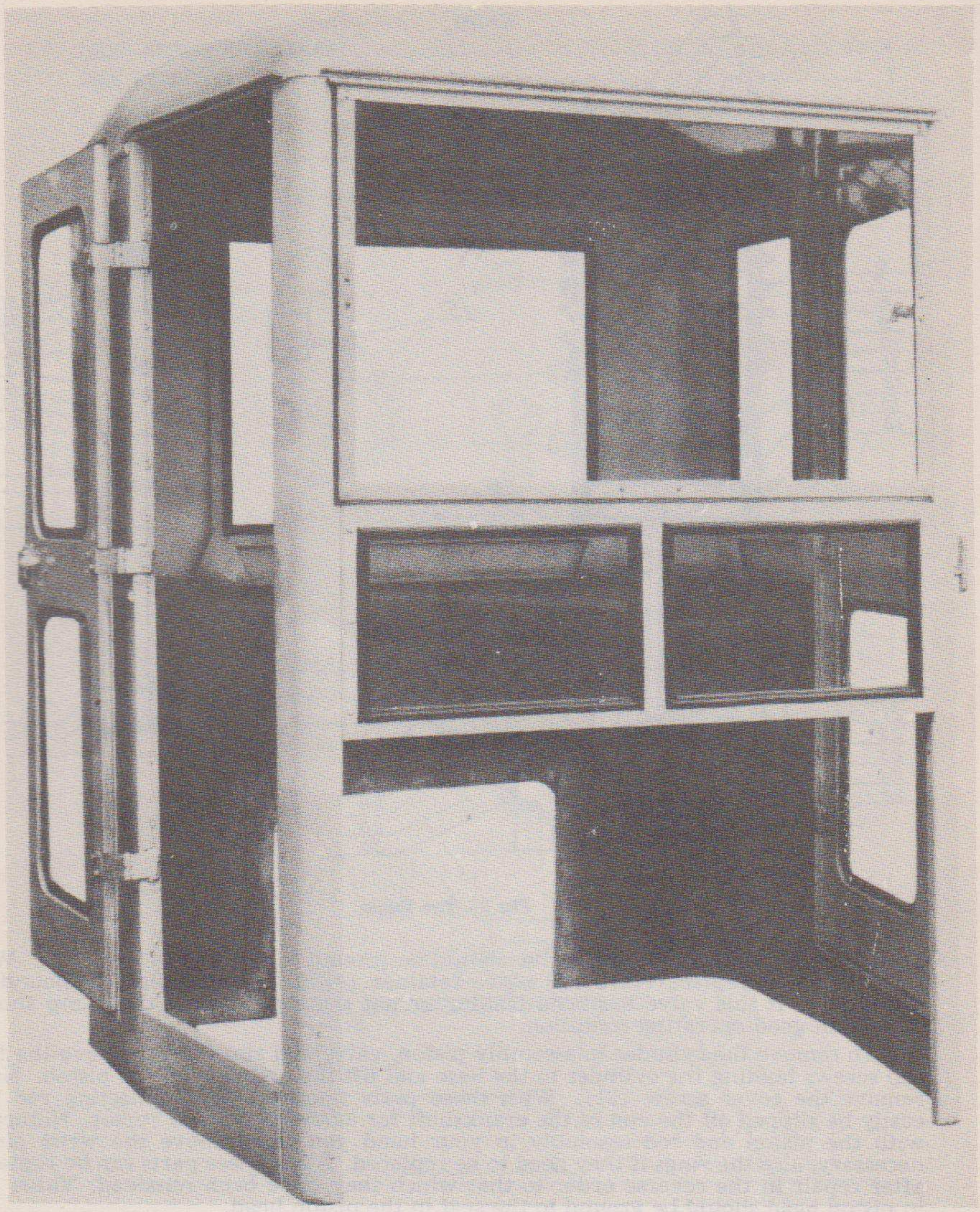

Fig. 3—Cab

Note: Cab used on machine on PO 55441 *and* 55897. *Balance of machines not equipped* with cab.

INSTALLATION INSTRUCTIONS FOR INSTALLING GLASS AND RUBBER IN CAB

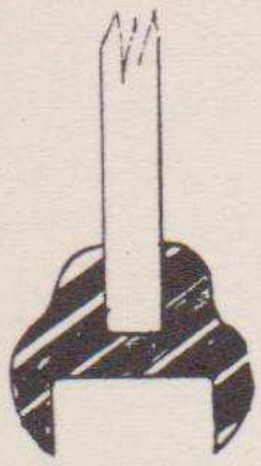

DIAGRAM A

No. 1—Assemble rubber to glass as shown in Diagram "A".

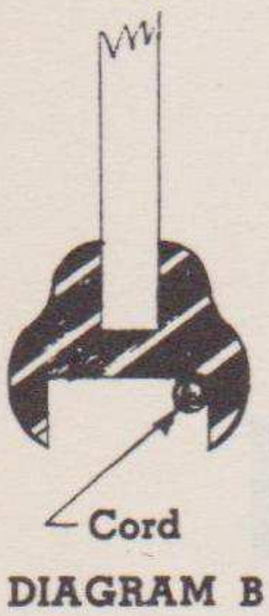

DIAGRAM B

No. 2—Insert a piece of strong cord in groove of rubber as shown in Diagram "B" and tie ends together at bottom of glass, holding rubber in place. Next apply a small amount of grease around window opening in cab.

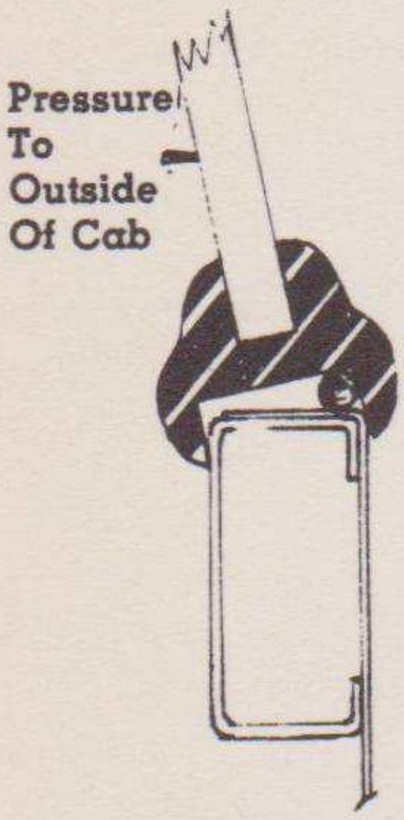

DIAGRAM C

No. 3—After setting lower part of glass and rubber in window opening, start working glass and rubber into opening with screw driver, exerting a slight pressure outward on glass.

No. 4—After glass and rubber has been inserted in opening about quarter-way up from bottom, assembler on outside of cab shall begin pulling on one end of twine with upward and outward motion, while assembler on inside of cab applies pressure near rubber as it pulls out from beneath lip of rubber. As cord pulls out from rubber the outside lip of rubber will lock over outside edge of window opening thereby completing operation.

Fig. 4

INDEX TO PARTS LIST

CONTROLS 1

ENGINE 2

ELECTRICAL EQUIPMENT 3

FRONT AXLE, WHEELS STEERING AND LEANING WHEEL PARTS 4

SCARIFIER 5

DRAWBARS, CIRCLE, MOLD-BOARD, CONTROL PARTS 6

HYDRAULIC SYSTEM 7

TRANSMISSION AND OVERDRIVE 8

TANDEM DRIVE & REAR WHEELS 9

HYDRAULIC BRAKES 10

TOOLS 11

MISCELLANEOUS PARTS 12

NUMERICAL LIST 13

PARTS LIST

INDEX

CLUTCH OPERATING PARTS 2
CONTROL PARTS—LOCATION ..... 6 & 7
GEAR SHIFT PARTS 3
GOVERNOR CONTROL PARTS 8-9
HAND BRAKE PARTS ..... 1 & 2
HYDRAULIC BRAKE CONTROL PARTS 5
OVERDRIVE GEAR SHIFT PARTS 5
CONVERSION LEVER 5
CHOKE ASSEMBLY 7
INSTRUMENT PANEL 7

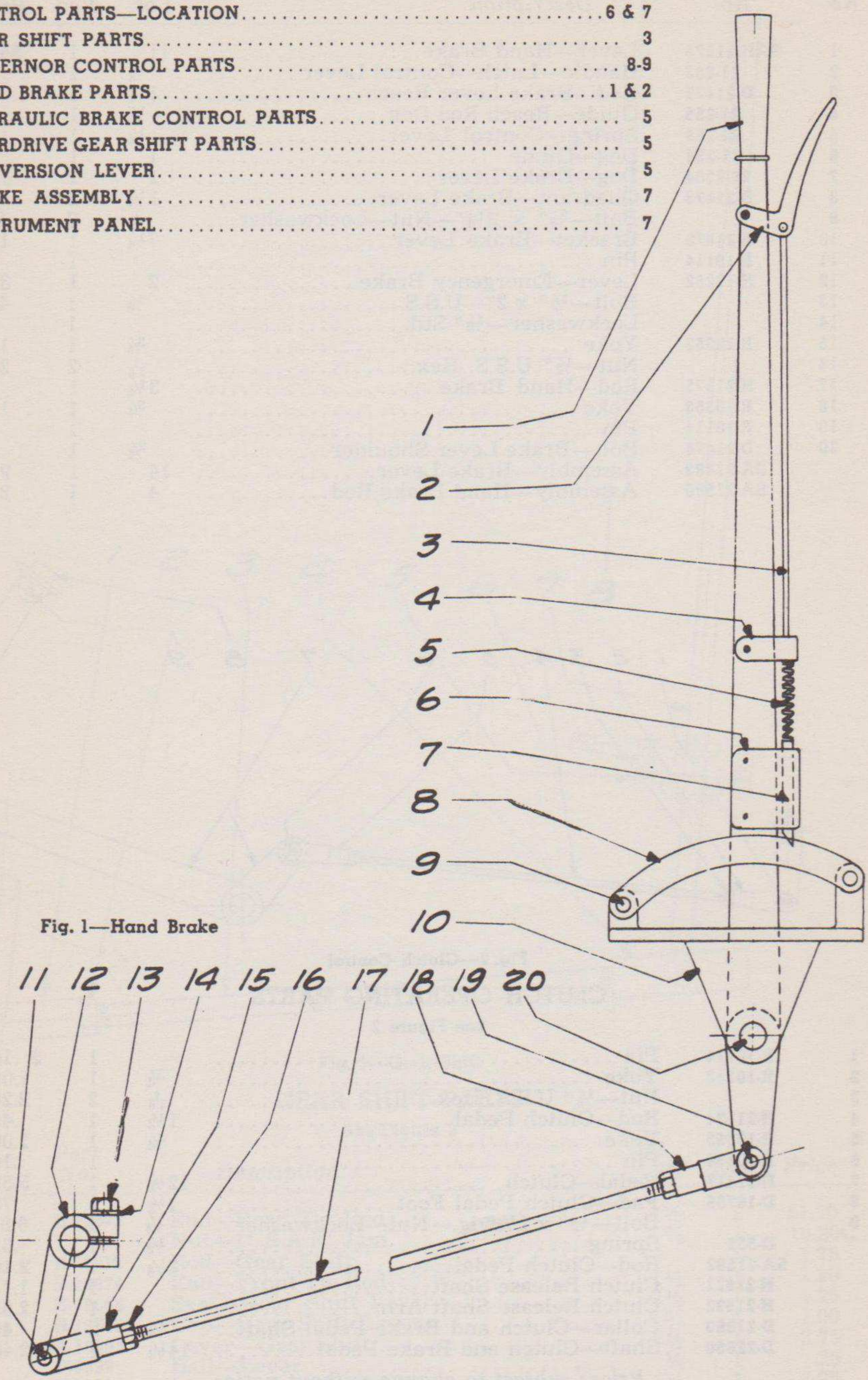

Fig. 1—Hand Brake

HAND BRAKE PARTS

See Figure 1

Item No.	Part No.	Description	Wt. Lbs.	Req.	Price
1	SAH-21475	Lever—Hand Brake	11	1	$4.45
2	21-256	Handle—Latch—Control Lever	½	1	.45
3	D-21472	Rod—Brake Lever Reach	1¼	1	.45
4	21-255	Guide—Reach Rod Dog	¼	1	.35
5	21-259	Spring—Control Lever	¼	1	.20
6	21-254	Dog—Guide	1	1	.75
7	28-9304	Dog—Brake Lever	1	1	1.55
8	D-21473	Quadrant—Brake Lever	1¼	2	.20
9		Bolt—⅜" x 2¼"—Nut—Lockwasher	1/16	2	4.10C
10	B-21476	Bracket—Brake Lever	7¼	1	1.45
11	R-10114	Pin		1	.10
12	H-17252	Lever—Emergency Brake	2	1	3.20
13		Bolt—½" x 2"—U.S.S.	⅛	1	4.45C
14		Lockwasher—½" Std.		1	.50C
15	R-10353	Yoke	¾	1	1.00
16		Nut—½" U.S.S. Hex	1/16	2	2.20C
17	H-21575	Rod—Hand Brake	3¼	1	.60
18	R-10353	Yoke	¾	1	1.00
19	R-10114	Pin		1	.10
20	D-21474	Bolt—Brake Lever Shoulder	¾	1	.80
	SA-21483	Assembly—Brake Lever	14	1	9.90
	SA-21580	Assembly—Hand Brake Rod	4	1	2.10

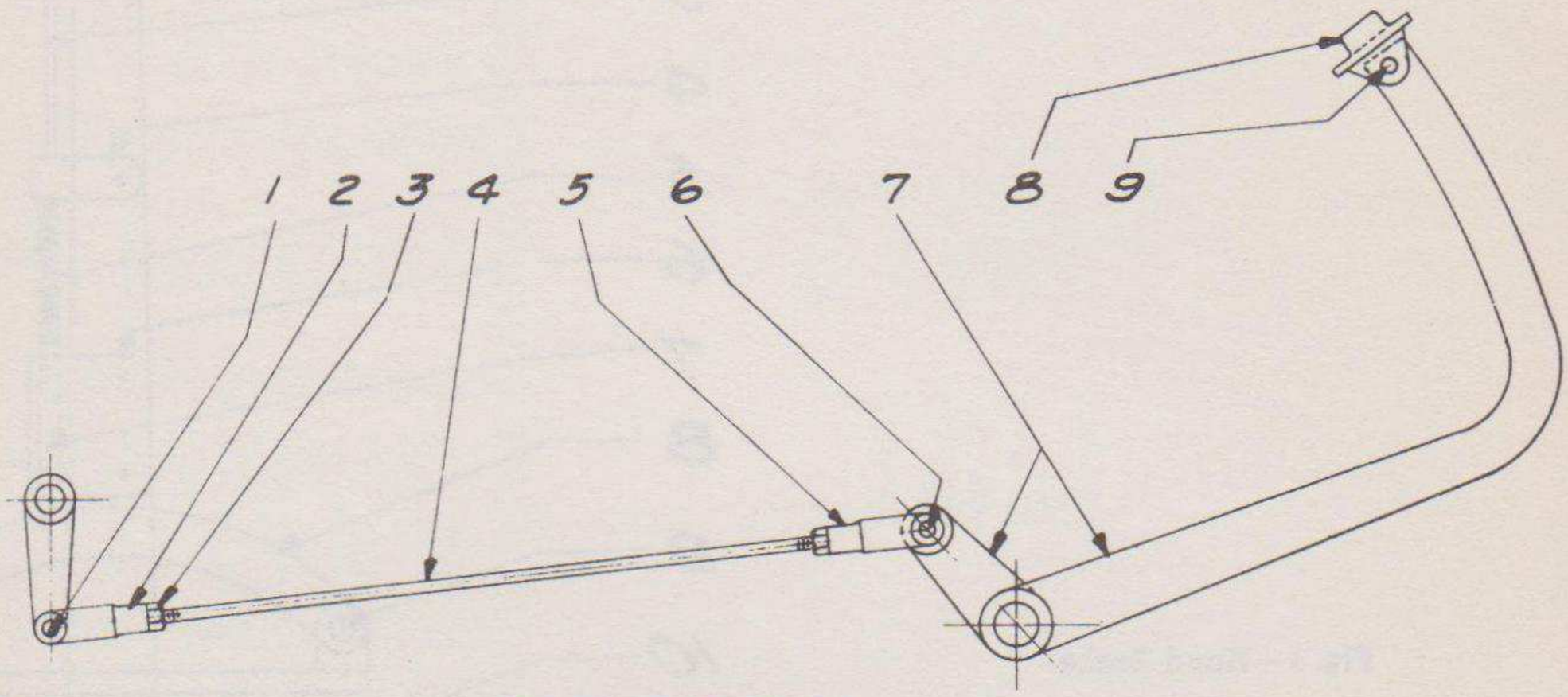

Fig. 2—Clutch Control

CLUTCH OPERATING PARTS

See Figure 2

1	R-10114	Pin		1	$ .10
2	R-10353	Yoke	¾	1	1.00
3		Nut—½" U.S.S. Hex	1/16	2	2.20C
4	H-21574	Rod—Clutch Pedal	1½	1	.40
5	R-10353	Yoke	¾	1	1.00
6	R-10114	Pin		1	.10
7	H-21417	Pedal—Clutch	12½	1	5.55
8	D-16766	Pad—Clutch Pedal Foot	1½	1	.75
9		Bolt—½" x 1½" lg.—Nut—Lockwasher	⅛	1	6.85C
	D-552	Spring	½	1	.65
	SA-21582	Rod—Clutch Pedal	2¼	1	2.10
	H-21621	Clutch Release Shaft		1	1.15
	H-21622	Clutch Release Shaft Arm		1	2.55
	D-21860	Collar—Clutch and Brake Pedal Shaft	¼	2	.40
	D-22650	Shaft—Clutch and Brake Pedal	14½	1	2.40

Prices subject to change without notice

PARTS LIST

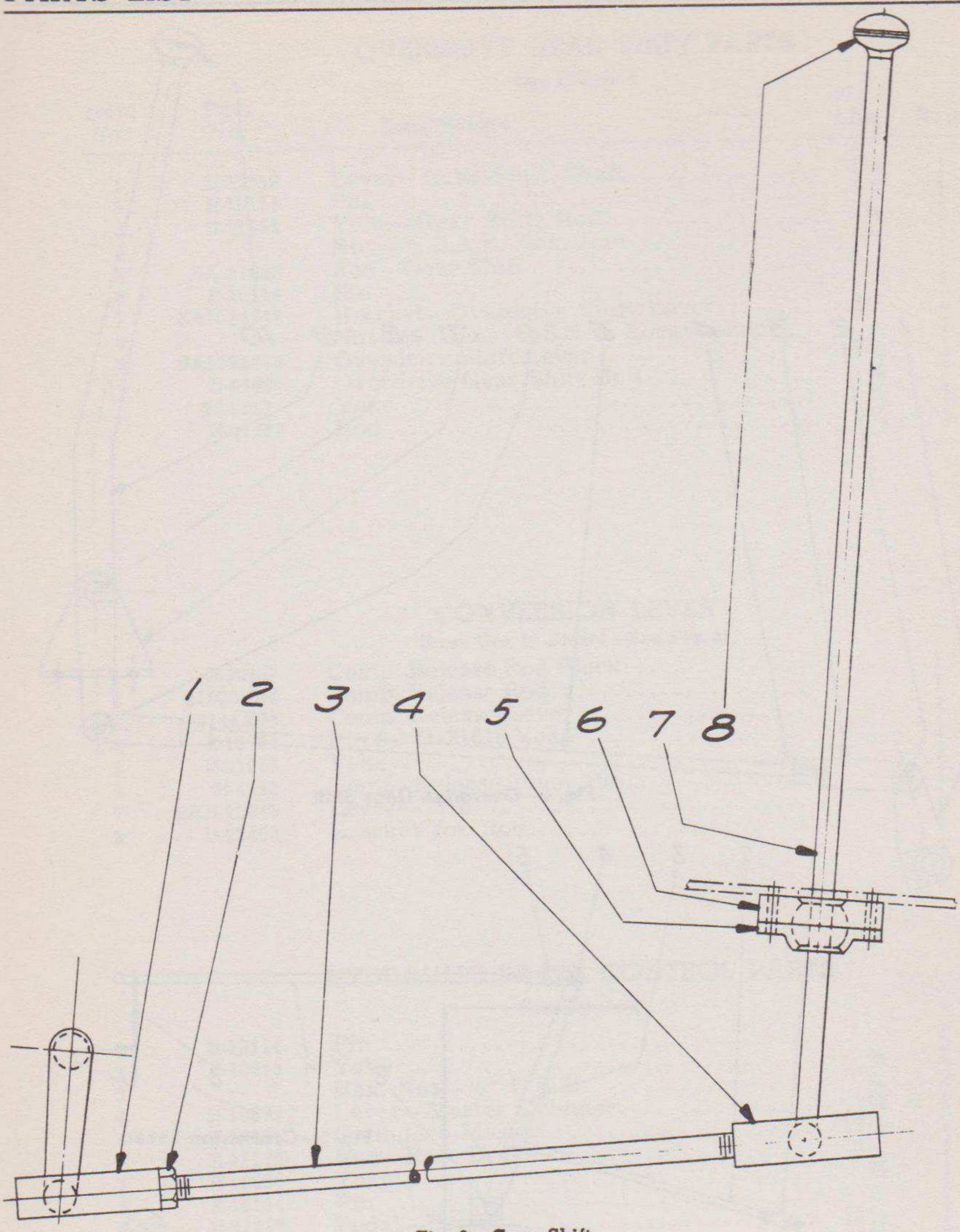

Fig. 3—Gear Shift

GEAR SHIFT PARTS

See Figure 3

Item No.	*Part No.*	*Description*	*Wt. Lbs.*	*Req.*	*Price*
1	D-21673	End—Rear Tie Rod	1½	1	$1.90
2		Nut—1" S.A.E. Jam	⅛	1	10.20C
3	H-21312	Rod—Gear Shift	10	1	1.75
4	D-21674	End—Front Tie Rod	1½	1	1.90
5	H-19664	Seat—Gear Shift Lever	2¼	1	1.25
6	H-19665	Cap—Gear Shift Lever	¾	1	1.00
7	SA-19807	Lever—Gear Shift	7½	1	3.75
8	D-6899	Ball—Lever	⅛	1	.25
	H-21550	Lever—Gear Shift Shaft	1½	1	3.25
	SA-21653	Rod—Gear Shift	13½	1	8.35

Prices subject to change without notice

PARTS LIST

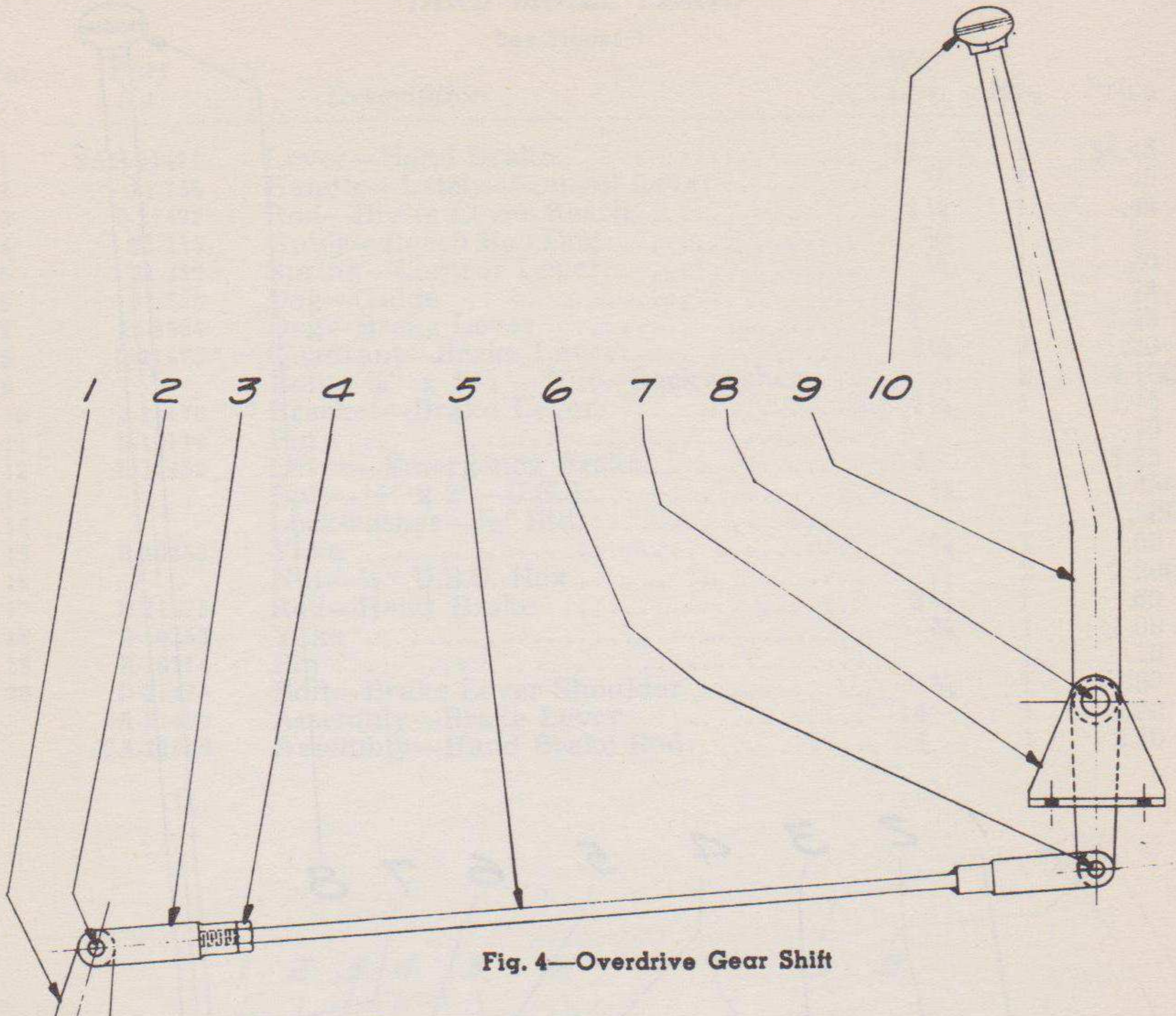

Fig. 4—Overdrive Gear Shift

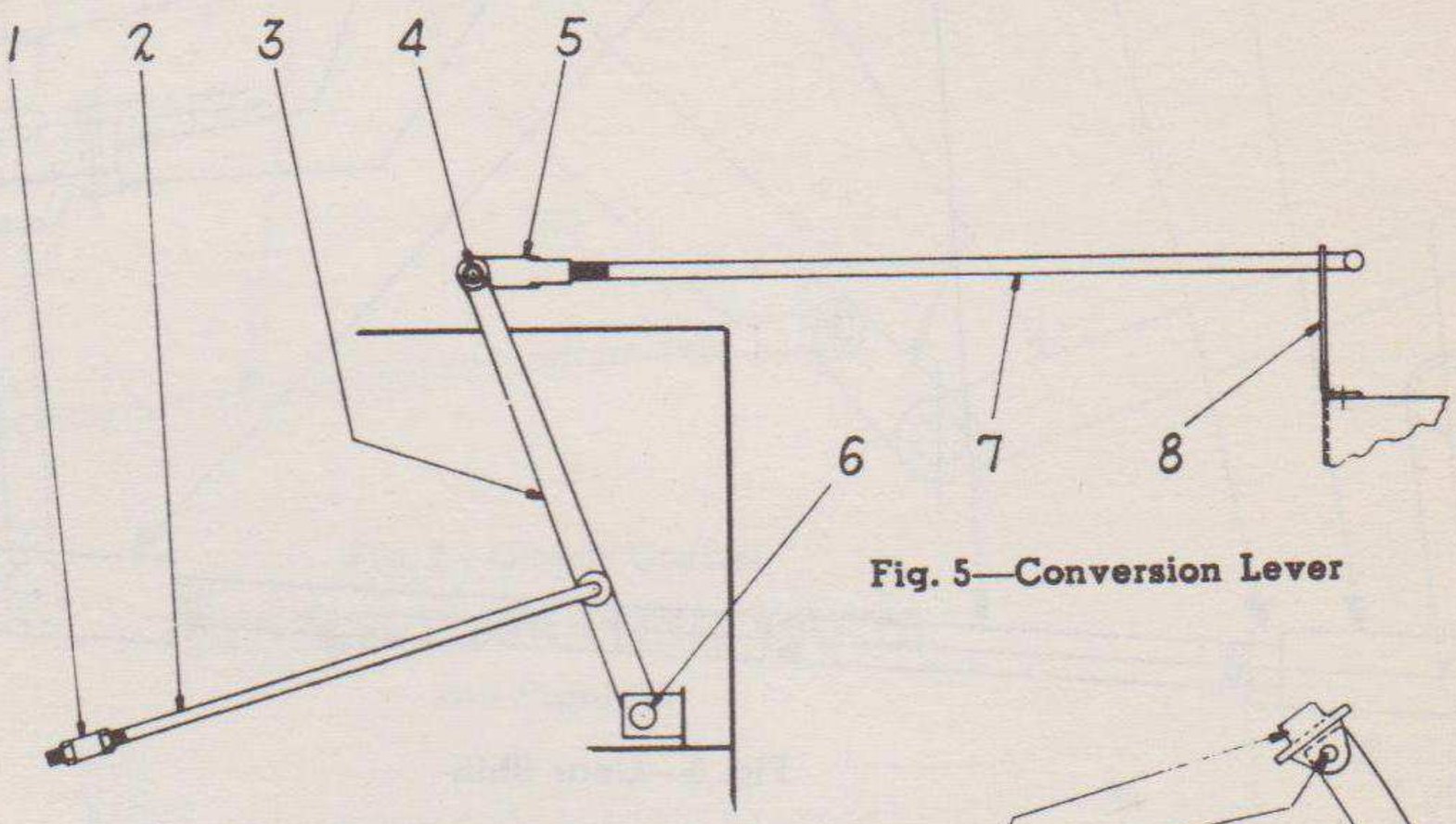

Fig. 5—Conversion Lever

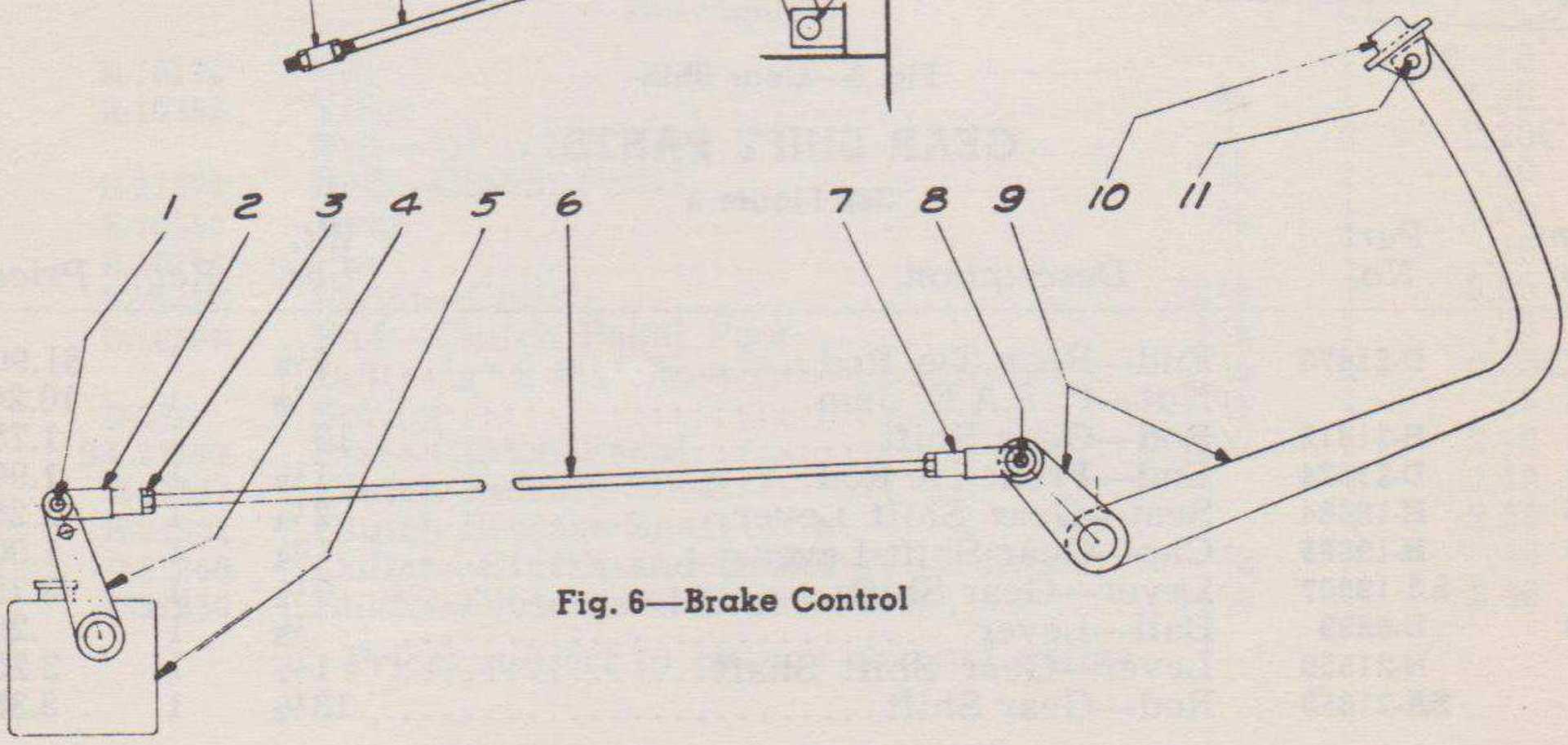

Fig. 6—Brake Control

OVERDRIVE GEAR SHIFT PARTS

See Figure 4

Item No.	Part No.	Description	Wt. Lbs.	Req.	Price
1	H-21550	Lever—Gear Shift Shaft	1½	1	$3.25
2	R-10114	Pin		1	.10
3	D-21852	Yoke—Gear Shift Rod	½	1	1.35
4		Nut—⅝ S.A.E. Hex. Jam	1/16	1	3.50C
5	SA-21633	Rod—Gear Shift	6	1	2.55
6	R-10114	Pin		1	.10
7	SAH-21549	Bracket—Overdrive Shift Lever	2½	1	1.65
8		Nut—⅝ Hex.—U.S.S. & Lockwasher	1/16	1	4.50C
9	SAH-25853	Overdrive Shift Lever	7½	1	2.65
10	D-6899	Overdrive Gear Shift Ball	⅛	1	.25
	25-8267	Yoke	¾	1	2.45
	H-21552	Rod	5¼	1	1.40

CONVERSION LEVER

(from Gas to Diesel—See Fig. 5)

1	48906-D	Comp. Release Rod Block		1	.17
2	61020-DM	Comp. Release Rod		1	.55
3	9144-DM	Comp. Release Lever		1	1.10
4	R-13724	Pin for D-21616 Yoke		1	.10
5	D-21616	Yoke		1	.60
6	H-4213	Comp. Release Pivot Pin		1	.35
7	SAH-23949	Lever—Trip		1	.60
8	D-22403	Bracket for Rod		1	.50

HYDRAULIC BRAKE CONTROL PARTS

See Figure 6

1	R-10114	Pin		1	$ .10
2	R-10353	Yoke	¾	1	1.00
3		Hex. Nut—½" U.S.S.	1/16	2	2.20C
4	H-19679	Lever—Master Cylinder	1¼	1	2.40
5	H-9943	Cylinder—Master	13½	1	21.00
6	H-21576	Rod—Foot Brake	3	1	.75
7	R-10353	Yoke	¾	1	1.00
8	R-10114	Pin		1	.10
9	H-21416	Pedal—Brake	13½	1	6.15
10	D-16766	Pad—Brake Pedal Foot	1½	1	.75
11		Bolt—½" x 1½" lg.—Nut & Lockwasher	⅛	1	6.85C

Prices subject to change without notice

990620 O—52——20

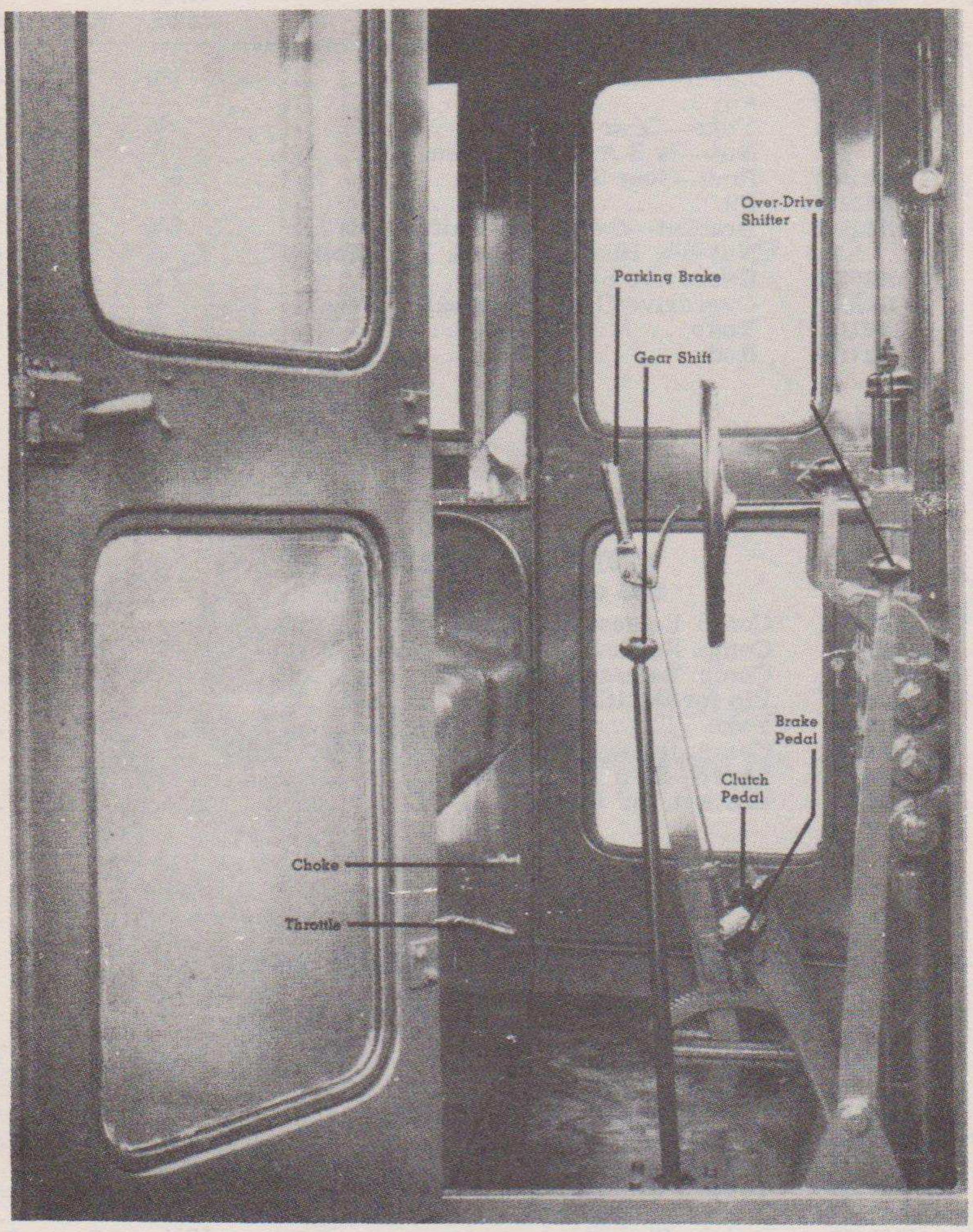

Fig. 7—Controls—Location

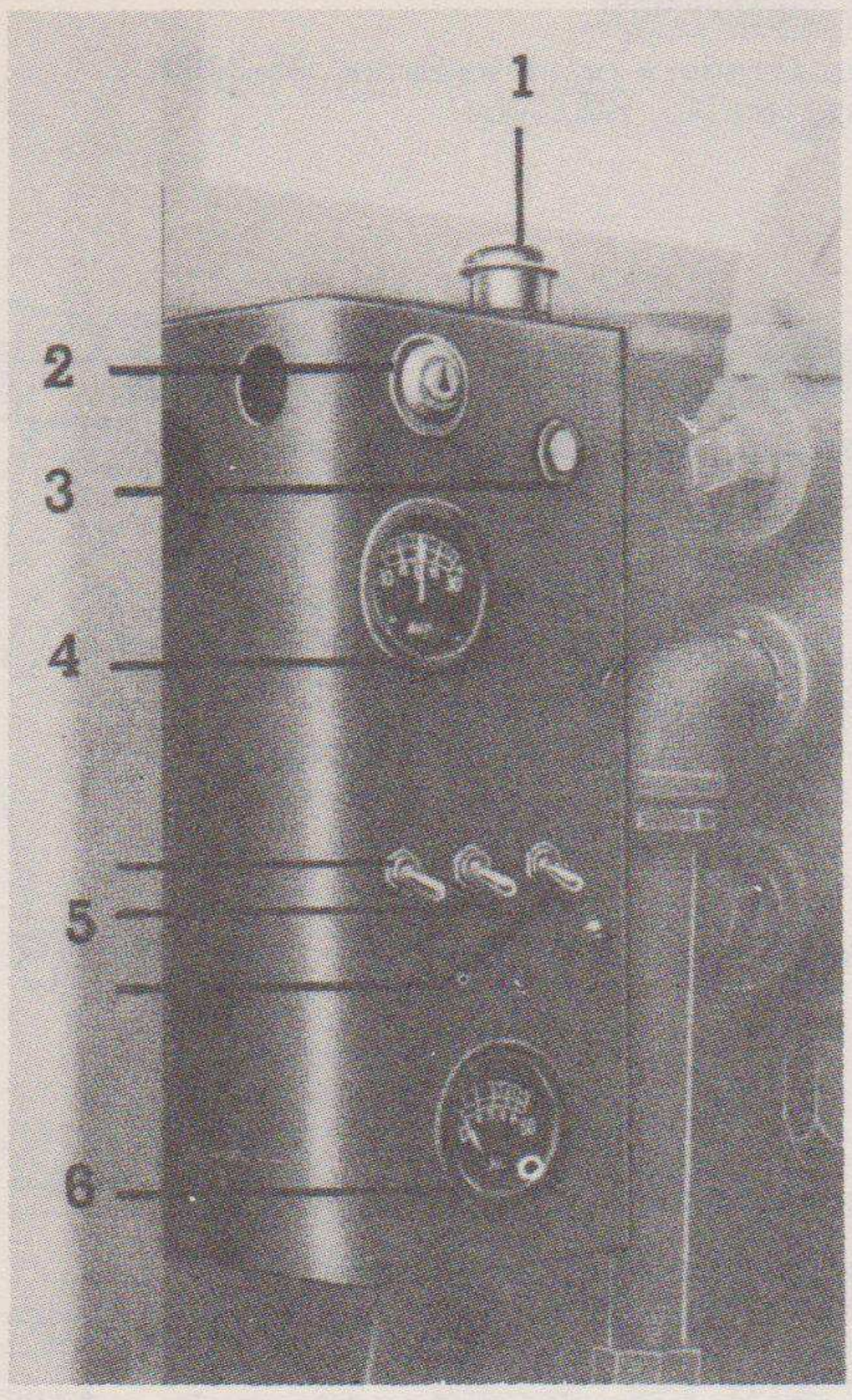

Fig. 8—Electrical Controls—Location

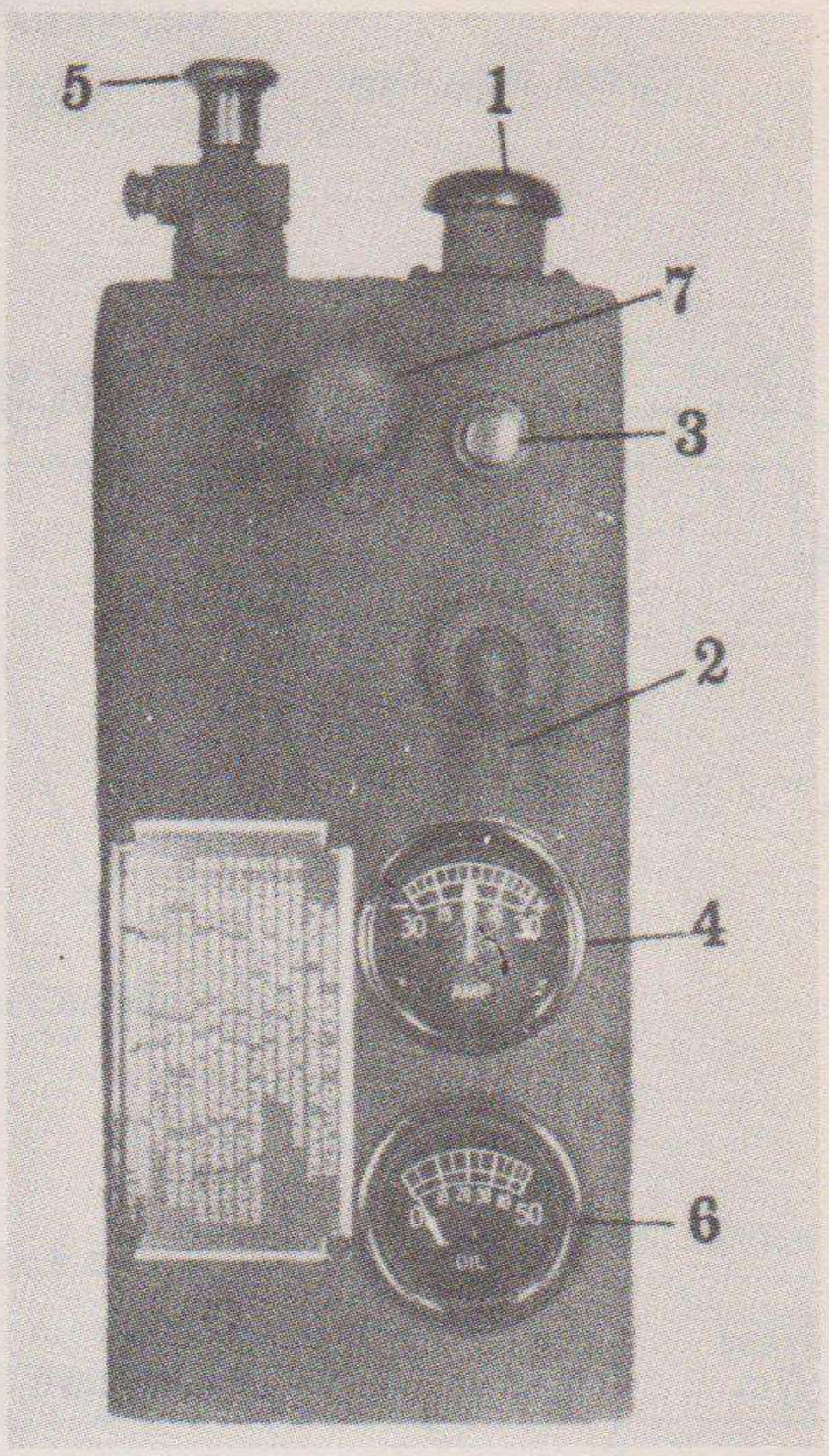

Fig. 8A—Electrical Controls—Location

INSTRUMENT PANEL as used on P.O. No. 55441 and P.O. No. 55897

1	8189-F	Horn Button	1	$ .75
2	50704	Key Switch	1	1.00
3	XA-456	Starter Button	1	1.00
4	693-A	Ammeter	1	2.40
5	8640	Switch—toggle type	3	1.50
6	D-16438	Oil Gauge	1	1.75

INSTRUMENT PANEL as used on P.O. No. PI-2364, P.O. No. PI-2967 and PI-3193

	5975	Dimmer Switch—Douglas	1	$1.00
1	8189-F	Horn Button	1	.75
2	6282	Ignition Switch	1	1.25
3	XA-456	Starter Switch—push button	1	1.00
4	693-A	Ammeter	1	2.40
5	5970	Switch—blackout lighting with circuit breaker	1	3.75
6	D-16438	Oil Gauge	1	1.75
7	2902	Instrument Light	1	.60

CHOKE ASSEMBLY

Item No.	*Part No.*	*Description*	*Wt. Lbs.*	*Req.*	*Price*
	D-24094	Choke—4' 4" long	1	1	$1.00
	D-22115	Clamp—Choke Wire		1	.10

Prices subject to change without notice

GOVERNOR CONTROL

Used with Bosch injection pump on Graders prior to Serial M-3465.
Government Registration No. W810086.

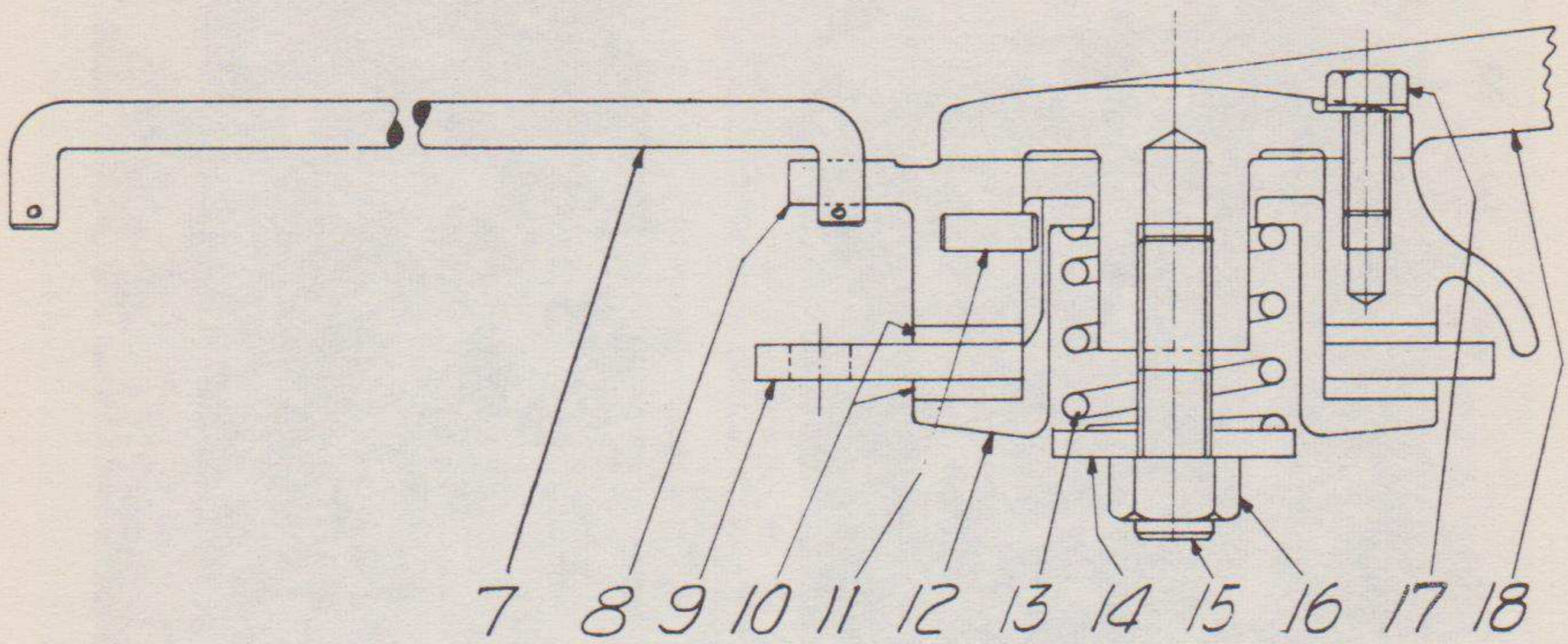

Fig. 9—Governor Control

Item No.	*Part No.*	*Description*	*Wt. Lbs.*	*Req.*	*Price*
	62474-D	Assembly—control lever includes items 8 to 18	1		$3.85
7	D-25598	Rod—control	1		.65
8	8264-DX	Body—control includes item 11	1		1.35
9	54210-D	Bracket—control	1		.22
10	48356-D	Disc—friction	2		.35
11	39482-D	Pin—control spring cup drive	1		.03
12	6649-D	Cup—control spring	1		.45
13	48358-D	Spring—control friction	1		.17
14	15042-D	Retainer—control spring	1		.17
15	52537-D	Stud—spring retainer	1		.05
16		Nut—½" Hex. N.C.	1		2.20C
17		Capscrews, $\frac{5}{16}$" x ¾" N.C.	3		1.70C
		Lockwasher, $\frac{5}{16}$"	3		.25C
18	8265-DX	Lever—governor control with stud No. 15	1		.95
		Capscrew, ⅜" N.C. x 1"—Bracket to cowl	2		2.30C
		Lockwasher, ⅜"—Bracket to cowl	2		.35C

Don't order parts from the illustrations only; refer to the list also.

GOVERNOR CONTROL

Used with I.H.C. injection pump on graders Serial M-3465 and up.
Government Registration No. W810086.

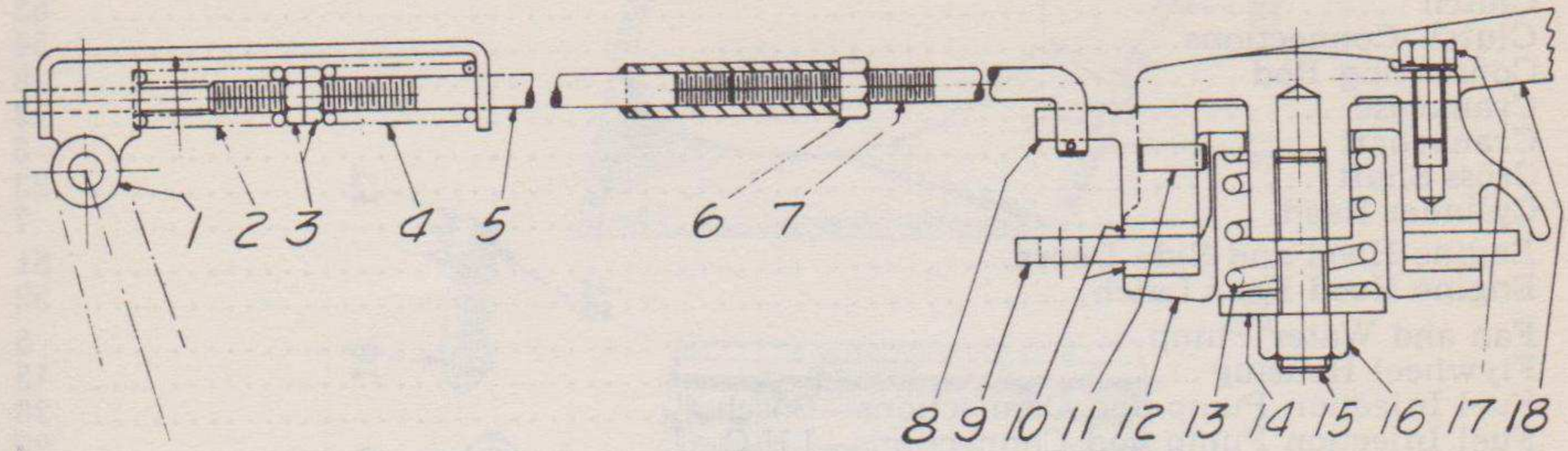

Fig. 10—Governor Control

Item No.	*Part No.*	*Description*	*Wt. Lbs.*	*Req.*	*Price*
	62474-D	Assembly—control lever includes items 8 to 18..		1	$3.85
1	**52640-D**	Assembly—governor control rod trunnion.....		1	.85
2	**64996-D**	Spring—governor control rod.....		1	.12
3		Nut—$\frac{5}{16}$" hex. type "D".....		2	1.00C
4	**64996-D**	Spring—governor control rod.....		1	.12
5	**67527-DM**	Assembly—governor control rod—front.....		1	1.15
6		Nut—$\frac{5}{16}$" Hex. N.C. Type "B".....		1	1.00C
7	**67865-DM**	Assembly—governor control rod—rear.....		1	.90
8	**8264-DX**	Body—governor control includes item 11.....		1	1.35
9	**54210-D**	Bracket—control		1	.22
10	**48356-D**	Disc—friction		2	.35
11	**39482-D**	Pin—control spring cup drive.....		1	.03
12	**6649-D**	Cup—control spring.....		1	.45
13	**48358-D**	Spring—control friction		1	.17
14	**15042-D**	Retainer—control spring		1	.17
15	**52537-D**	Stud—spring retainer		1	.05
16		Nut—½" Hex. N.C.....		1	2.20C
17		Capscrews, $\frac{5}{16}$" x ¾" N.C.....		3	1.70C
		Lockwasher, $\frac{5}{16}$"		3	.25C
18	**8265-DX**	Lever—governor control with stud No. 15.....		1	.95
	19306-D	Pin control rod trunnion.....		1	.02
		Capscrews, ⅜" N.C. x 1"—Bracket to cowl.....		2	2.30C
		Lockwasher, ⅜"—Bracket to cowl.....		2	.35C

Unnumbered parts in the illustrations are the same as corresponding parts shown with numbers.

INDEX TO OPERATING ENGINE

Air Cleaner and Connections—for I.H.C. Pump 31
Air Cleaner and Connection—Engine 50
Bearings 8
Carburetor and Connections 20
Clutch 53
Clutch Connections 54
Connecting Rod 8
Crankcase 12
Crankshaft 8
Cross Shaft 23
Cylinder Head 7
Engine Hood and Side Doors 51
Engine Hood Door Latch 52
Fan and Water Pump 5
Flywheel Housing 13
Fuel Injection Pump and Connections—Bosch 26
Fuel Injection Pump and Connections—I.H.C. 29
Fuel Injection Pump—I.H.C. 33
- Camshaft 38
- Control Lever 36
- Cover 35
- Details of Assemblies 43
- Distributor Valve Block 36
- Fuel Return and High Pressure Pipe on Pump 36
- Governor Spring 35
- Governor Shaft Unit 33
- Housing—Governor Fork and Shaft 42
- Oil Filler 35
- Plunger 39
- Primary Pump 42
- Pump Housing 35
- Scavenger Valve 41
- Torque Control 35

Fuel Oil Filler with Bosch Pump 27
Fuel Oil Filler with I.H.C. Pump 28
Gasoline Strainer 17
Gasoline Tank 17
Governor ..... *see Fuel Pump*
Injection Nozzle and Pipes 25
Lubricating Oil Filter 16
Lubricating Oil Pump 17
Parts Necessary to Change Engine from Bosch to I.H.C. Pump 32
Magneto 46
Magneto Drive 48
Manifolds 13
Pistons and Rings 8
Primer 21
Radiator and Connections 3
Spark Plugs 8
Spark Plug Cables 49
Starting Crank 54
Starting Valves and Shaft 22
Thermostat 5
Tools 54
Valves 7
Water Pump 5
Water Trap 24

NOTE: Graders up to Serial M3465 equipped with Bosch Pump. Graders starting with Serial M3465 and up equipped with I.H.C. Pump. Gov. registration W810086.

RADIATOR AND CONNECTIONS

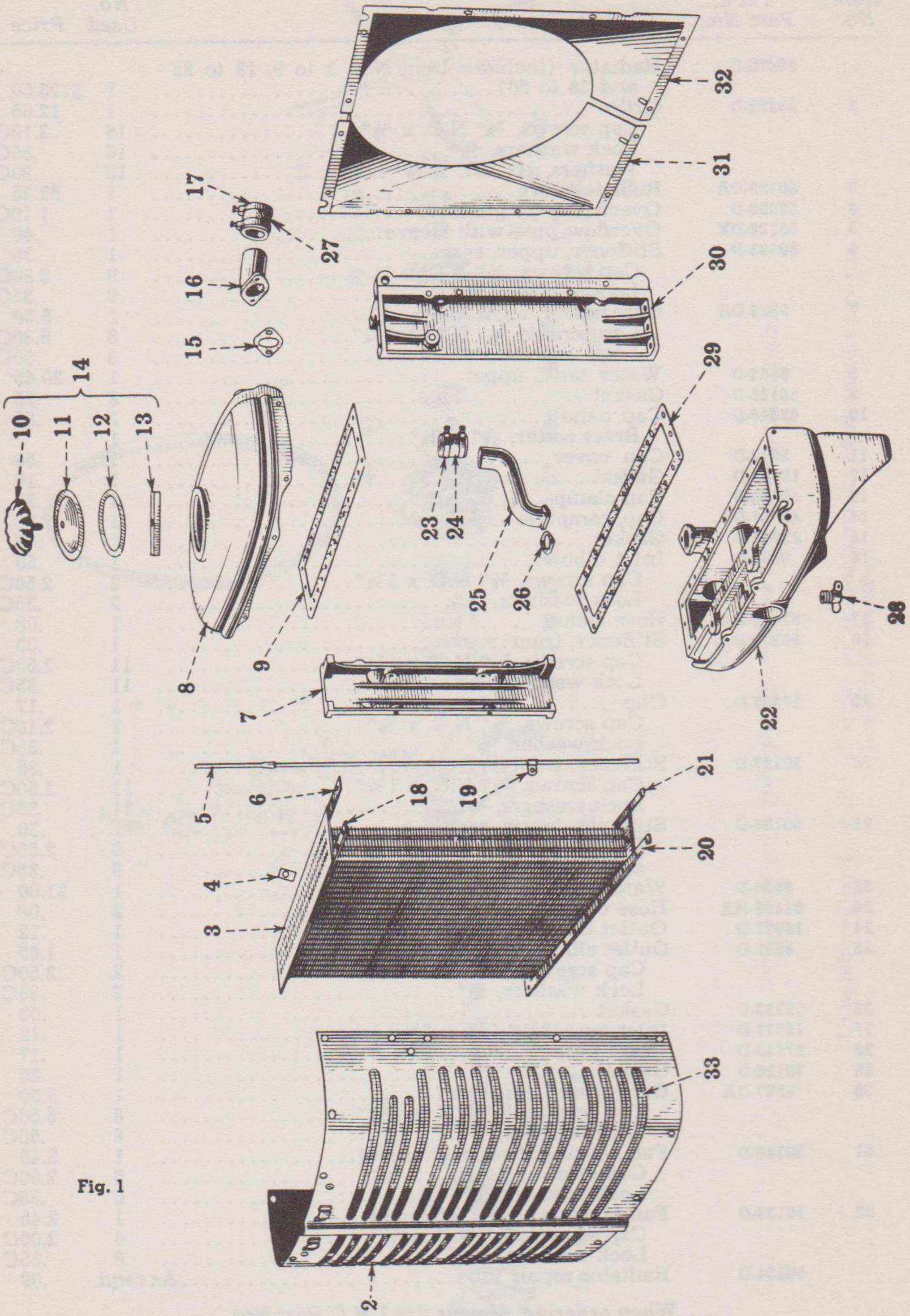

Fig. 1

RADIATOR AND CONNECTIONS

See Figure 1

Item No.	IHC Part No.	Description	No. Used	Price
	55870-D	Radiator (includes Item Nos. 3 to 9, 18 to 22 and 28 to 30)	1	$126.50
2	55872-D	Grille	1	12.65
		Cap screws, 3/8" N.C. x 3/4"	16	2.10C
		Lock washers, 3/8"	16	.35C
		Washers, 13/32" I.D. x 7/8" O.D.	16	.20C
3	50129-DA	Radiator core	1	52.25
4	52033-D	Overflow pipe gasket	1	1.10C
5	50138-DX	Overflow pipe with sleeve	1	.40
6	50135-D	Stiffener, upper, rear	1	.35
		Cap screws, 3/8" N.C. x 1"	9	2.30C
		Lock washers, 3/8"	9	.35C
7	6988-DA	Core spacer, right hand	1	5.50
		Cap screws, 1/2" N.C. x 1 3/4"	8	6.30C
		Lock washers, 1/2"	8	.50C
8	6986-D	Water tank, upper	1	20.65
9	50126-D	Gasket	2	.25
10	42610-D	Cap handle	1	.85
		Brass cotter, 5/32" x 3/4"	1	
11	5913-D	Cap cover	1	.50
12	10429-D	Gasket	1	.10
13	42158-D	Cap clamp	1	.25
14	42611-D	Cap, complete	1	1.90
15	22383-D	Gasket	1	.03
16	6990-D	Inlet elbow	1	.50
		Cap screws, 3/8" N.C. x 1 1/4"	2	2.50C
		Lock washers, 3/8"	2	.35C
17	91406-HA	Hose clamp	1	.08
18	50137-D	Stiffener, front	1	.35
		Cap screws, 3/8" N.C. x 1 1/4"	11	2.50C
		Lock washers, 3/8"	11	.35C
19	27307-D	Clip	1	.17
		Cap screws, 3/8" N.C. x 3/4"	1	2.10C
		Lock washer, 3/8"	1	.35C
20	50137-D	Stiffener, front	1	.35
		Cap screws, 3/8" N.C. x 1 1/4"	11	2.50C
		Lock washers, 3/8"	11	.35C
21	50136-D	Stiffener, lower, rear	1	.30
		Cap screws, 3/8" N.C. x 1 1/4"	9	2.50C
		Lock washers, 3/8"	9	.35C
22	8654-D	Water tank, lower	1	21.00
23	91406-HA	Hose clamp	2	.08
24	16077-D	Outlet hose, 2 1/8" I.D. x 2 3/8" long	1	.12
25	6992-D	Outlet elbow	1	1.65
		Cap screws, 3/8" N.C. x 1 1/4"	2	2.50C
		Lock washers, 3/8"	2	.35C
26	22383-D	Gasket	1	.03
27	16077-D	Inlet hose, 2 1/8" I.D. x 2 3/8" long	1	.12
28	27843-D	Drain plug	1	.17
29	50126-D	Gasket	1	.25
30	6987-DA	Core spacer, left hand	1	5.50
		Cap screws, 1/2" N.C. x 1 3/4"	8	5.50C
		Lock washers, 1/2"	8	.50C
31	50140-D	Fan housing sheet, right hand	1	2.45
		Cap screws, 3/8" N.C. x 5/8"	6	2.00C
		Lock washers, 3/8"	6	.35C
32	50139-D	Fan housing sheet, left hand	1	2.45
		Cap screws, 3/8" N.C. x 5/8"	6	2.00C
		Lock washers, 3/8"	6	.35C
	50134-D	Radiator repair tube	As reqd.	.09

When ordering, always use I H C Part Nos.

Prices subject to change without notice

WATER PUMP, FAN AND THERMOSTAT

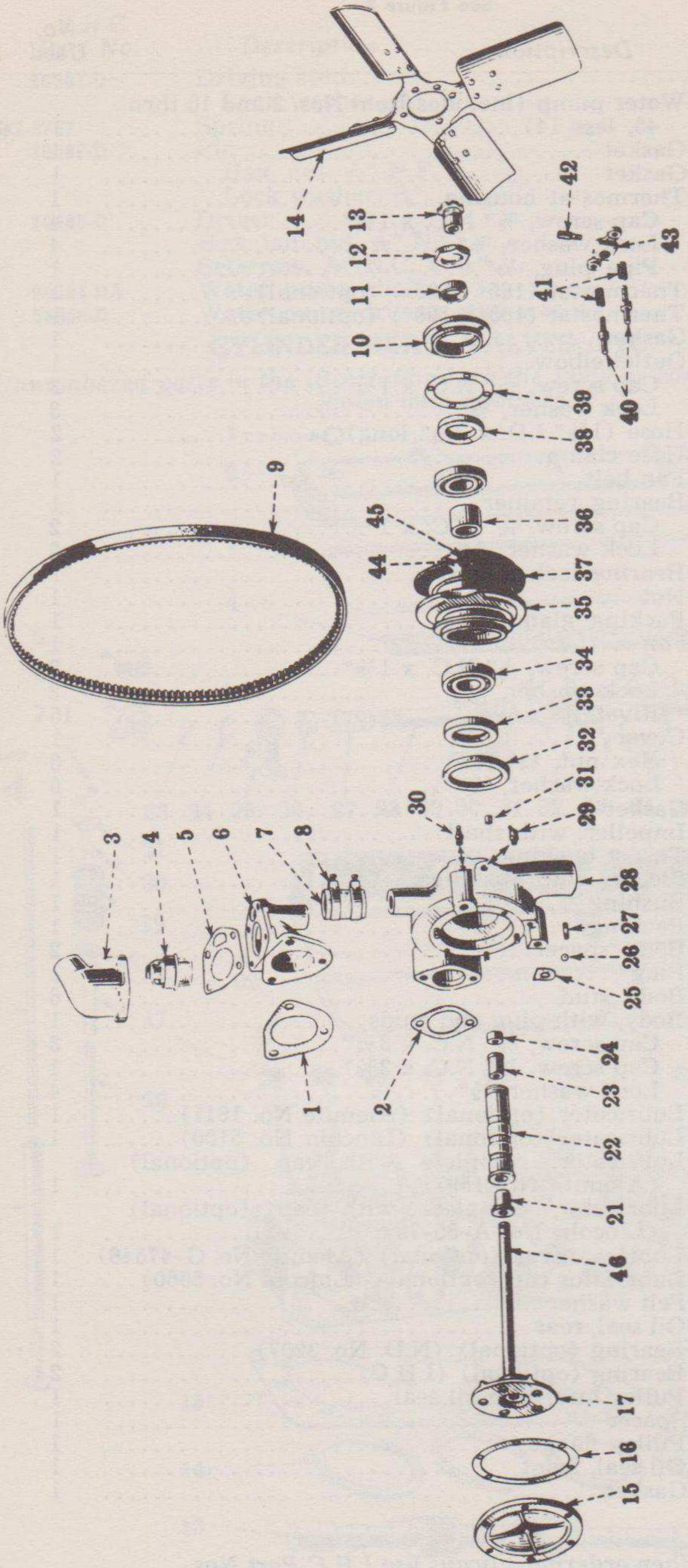

Fig. 2

Don't order parts from the illustrations only; refer to the list also.

Unnumbered parts in the illustrations are the same as corresponding parts shown with numbers.

PARTS LIST

WATER PUMP, FAN AND THERMOSTAT

See Figure 2

Item No.	I H C Part No.	Description	No. Used	Price
	55261-D	Water pump (includes Item Nos. 2 and 10 thru 45, less 14)	1	$38.00
1	32569-D	Gasket	1	.05
2	30824-D	Gasket	1	.03
3	6965-DX	Thermostat housing	1	2.85
		Cap screw, 3/8" N.C. x 1 1/4"	4	2.50C
		Lock washer, 3/8"	4	.35C
		Pipe plug, 1/4"	1	.06
4	33814-D	Thermostat (165° - 190°) (optional)	1	4.40
	37634-D	Thermostat (165° - 190°) (optional)	1	4.40
5	50273-D	Gasket	1	.05
6	6964-D	Outlet elbow	1	1.20
		Cap screw, 1/2" N.C. x 1 1/4"	3	5.50C
		Lock washer, 1/2"	3	.50C
7	27648-D	Hose (1 5/8" I.D. x 2 3/8" long)	2	.12
8	91406-H	Hose clamp	2	.08
9	30982-D	Fan belt	1	2.30
10	20306-DX	Bearing retainer	1	1.75
		Cap screw, 5/16" N.C. x 1"	2	1.90C
		Lock washer, 5/16"	2	.25C
11	20293-D	Bearing lock sleeve	1	.17
12	20299-D	Nut	1	.25
13	20296-D	Packing gland	1	.95
14	21259-D	Fan	1	1.90
		Cap screw, 5/16" N.C. x 1 1/8"	2	2.10C
		Lock washer, 5/16"	2	.25C
		Rivet, 3/16" x 1/2"	16	.15C
15	3175-D	Cover	1	1.25
		Hex nut, 1/4" N.F.	6	.50C
		Lock washer, 1/4"	6	.25C
16	24941-D	Gasket	1	.10
17	2557-DAX	Impeller, with shaft	1	1.90
21	20303-D	Thrust bushing	1	.40
22	45982-DX	Sleeve, with bushings	1	2.75
23	24017-D	Bushing	1	.35
24	50790-D	Packing	1	.05
25	32349-D	Body spacer	2	.03
26	18196-D	Plug	1	.10
27	11657-D	Body stud	6	.05
28	6963-DX	Body, with plug and studs	1	9.35
		Cap screw, 1/2" N.C. x 3 1/4"	3	9.20C
		Cap screw, 1/2" N.C. x 2 3/4"	1	8.20C
		Lock washer, 1/2"	4	.40C
29	14187-DA	Lubricator (optional) (Alemite No. 1611)	1	.11
	Q-3625	Lubricator (optional) (Lincoln No. 5100)	1	.09
30	19175-CA	Lubricator, complete with cap (optional) (Alemite No. 1697)	1	.14
	QA-3628	Lubricator, complete with cap (optional) (Lincoln No. A-55-75)	1	.15
31	26033-DA	Lubricator cap (optional) (Alemite No. G-47546)	1	.04
	Q-3659	Lubricator cap (optional) (Lincoln No. 5560)	1	.05
32	20300-D	Felt washer	1	.17
33	20290-D	Oil seal, rear	1	.90
34	20308-D	Bearing (optional) (N.D. No. 3207)	2	3.65
	ST-205	Bearing (optional) (I H C)	2	3.65
35	8023-DX	Pulley hub, with oil seal	1	7.45
36	45993-D	Spacer	1	.50
37	2370-DX	Pulley flange	1	1.90
38	20289-D	Oil seal, front	1	.85
39	21839-D	Gasket	1	.05

When ordering, always use I H C Part Nos.

WATER PUMP, FAN AND THERMOSTAT

Item No.	IHC Part No.	Description	No. Used	Price
40	20301-D	Driving stud	2	.05
		Lock washer, 5/16"	2	.25C
41	G-3792	Spring	2	.12
42	20586-D	Pin	1	.12
		Hex. nut, 5/16" N.F.	1	.75C
		Lock washer, 5/16"	1	.25C
43	20585-D	Driver	1	.95
44		Hex. jam nut, 5/16" N.C.	1	.75C
45		Setscrew, 5/16" N.C. x 7/8"	1	2.10C
46	20584-DA	Water pump shaft	1	1.90
	55358-D	Water pump driving stud washer	2	.03

CYLINDER HEAD, VALVES, ETC.

Unnumbered parts in the illustrations are the same as corresponding parts shown with numbers.

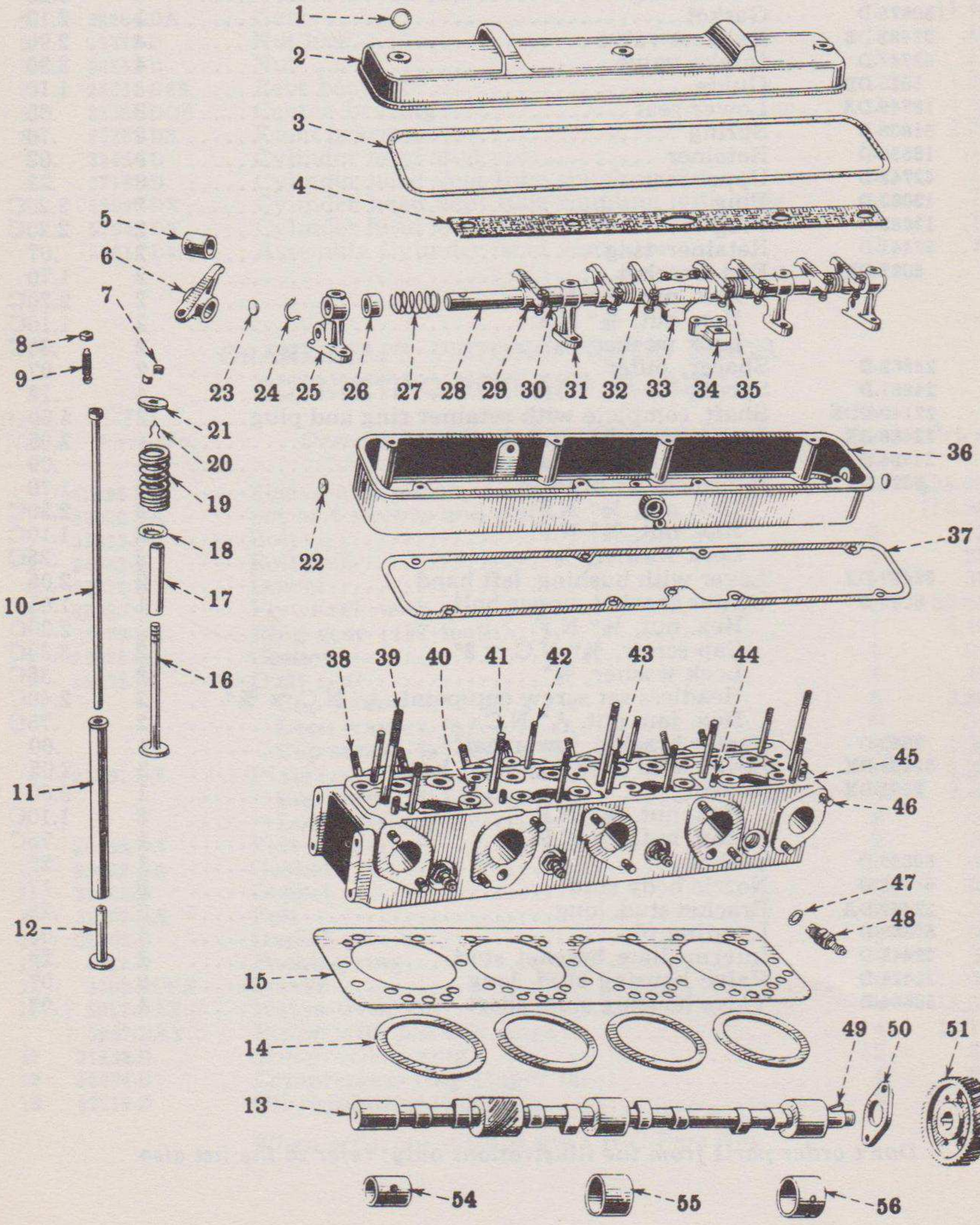

PARTS LIST

CYLINDER HEAD, VALVES, ETC.

Item No.	IHC Part No.	Description	No. Used	Price
1	58458-D	Washer	3	$ .05
2	50665-DX	Cover	1	3.00
		Hex. nut, ½" N.F.	3	2.20C
3	32685-D	Gasket	1	.35
4	27129-DD	Oiler felt	1	.90
5	24965-DA	Lever bushing	8	.30
6	32468-DX	Lever with bushing, right hand	2	2.05
7	32485-D	Key	16	.06
8	38763-H	Nut	8	3.30C
9	10951-D	Adjusting screw	8	.25
10	32486-DAX	Push rod	8	1.60
11	4988-D	Tappet guide	8	3.00
12	25043-DB	Tappet	8	1.25
13	53380-D	Camshaft	1	21.50
14	25090-DD	Gasket ring	4	1.25
15	50675-D	Gasket	1	2.10
16	32482-DB	Exhaust valve	4	2.90
	42747-D	Intake valve	4	2.30
17	5025-DBR	Guide	8	1.10
18	18746-DA	Lower seat	8	.05
19	61808-D	Spring	8	.70
20	18539-D	Retainer	8	.02
21	42748-D	Upper seat	8	.22
22	13083-D	Plug	2	2.20C
23	13083-D	Plug	2	2.20C
24	27141-D	Retainer ring	2	.07
25	5027-DB	End bracket	2	1.70
		Hex. nut, ½" N.F.	2	2.20C
		Hex. nut, ⅜" N.F.	2	1.10C
		Lock washer, ⅜"	2	.35C
26	24962-D	Spacer, outer	2	.07
27	24961-D	Spring	4	.12
28	27140-DDX	Shaft, complete with retainer ring and plug	2	5.00
29	32466-DX	Lever, straight, with bushing	4	2.05
30	24964-D	Spacer, intermediate	4	.09
31	5028-D	Intermediate bracket	2	1.70
		Hex. nut, ½" N.F.	2	2.20C
		Hex. nut, ⅜" N.F.	2	1.10C
		Lock washer, ⅜"	2	.35C
32	32467-DX	Lever with bushing, left hand	2	2.05
33	8063-D	Center bracket, upper half	1	1.65
		Hex. nut, ½" N.F.	1	2.20C
		Cap screw, ⅜" N.C. x 2"	2	3.30C
		Lock washer, ⅜"	2	.35C
		Headless set screw cup point, 5/16" N.C. x ¾"	2	2.40C
		Hex. jam nut, 5/16" N.C.	2	.75C
34	8062-D	Center bracket, lower half	1	.60
35	32468-DX	Lever with bushing, right hand	2	2.05
36	8061-DX	Housing	1	9.00
		Hex. nut, ⅜" N.F.	8	1.10C
		Hex. nut, 5/16" N.F.	1	.75C
37	50669-D	Gasket	1	.22
38	54158-D	Nozzle body stud	8	.17
39	32447-DA	Bracket stud, long	3	.25
40	50668-D	Locating pin	1	.03
41	32448-D	Intermediate bracket stud	2	.25
42	32444-D	Valve housing stud, long	8	.07
43	50664-D	Valve housing stud, short	1	.07

Don't order parts from the illustrations only; refer to the list also.

CYLINDER HEAD, VALVES, ETC.

Item No.	I H C Part No.	Description	No. Used	Price
44	32445-D	Bracket stud, short	4	.05
45	8064-DAX	Head, includes valve inserts, valve guides, studs and stud sleeves	1	109.00
	8064-DAY	Head, includes 8064-DAX with valves, valve springs, seats, keys and retainer	1	140.00
		Countersunk pipe plug, ⅜"	4	.11
		Countersunk pipe plug, ½"	2	.11
46	50677-D	Manifold stud	10	.07
47	3405-H	Spark plug gasket	4	1.00C
48	31536-D	Spark plug (Champion No. 44)	4	.65
	32713-D	Spark plug (A. C. 18)	4	.65
49	13055-D	Key (Woodruff B)	1	3.25C
50	5960-D	Thrust plate	1	.85
		Cap screw, ½" N.C. x 1¼"	2	5.50C
		Lock washer, ½"	2	.50C
51	32284-DA	Gear	1	11.40
52	25323-D	Nut lock	1	.14
53	58253-D	Nut	1	.17
54	25083-DBR	Rear bearing	1	1.25
55	32282-DOR	Center bearing	1	1.65
56	50283-DR	Front bearing	1	1.25
	32454-D	Cylinder head stud nut	21	.14
	37165-D	Cylinder head vent tube coupling nut	3	.17
	55999-DX	Cylinder head vent tube coupling with nuts	1	.75
	57942-DX	Cylinder head vent tube connector with nuts	1	.35
	61015-DMX	Assembly Cylinder head vent tube	1	.75

CRANKSHAFT, PISTONS, PISTON RINGS, CONNECTING ROD AND BEARINGS

Item No.	I H C. Part No.	Description	No. Used	Price
	42695-DA	Sleeve and piston	4	$28.60
	43026-DA	Set of 4 sleeves and pistons	1	114.50
1	32333-D	Bolt	6	.12
2	24943-D	Bolt lock	3	.25
3	32332-D	Dowel	2	.35
4	8609-DX	Flywheel, with ring gear	1	39.60
5	28173-DA	Ring gear (157 teeth)	1	4.40
6	25096-D	Gasket	1	.08
7	25095-D	Dust seal	1	.45
		Cap screw, ⅜" N.C. x 1¼"	2	2.50C
		Lock washer, ⅜"	5	.35C
		Cap screw, ⅜" N.C. x ⅞"	3	2.20C
8	25091-DA	Plate	1	2.20
		Cap screw, ⅜" N.C. x 1"	4	2.30C
		Lock washer, ⅜"	4	.35C
9	25093-DA	Felt plug	2	.02
10	25092-DA	Gasket	1	.05
11	32308-D	Gasket	2	.03
12	32307-DA	Felt	2	.30
13	32309-D	Gasket	1	.08
14	4222-D	Packing ring	4	.20
15	3202-DDRX	Sleeve	4	13.00
16	5957-DAX	Piston with pin	4	16.00
	5957-DAY	Piston with pin and rings	4	18.75
17	31458-D	Compression ring	12	.35
18	42694-D	Compression ring (taper face)	4	.55
19	42219-D	Oil regulating ring	8	.90

When ordering, always use I H C Part Nos.

PARTS LIST

CRANKSHAFT, PISTONS, PISTON RINGS, CONNECTING ROD AND BEARINGS

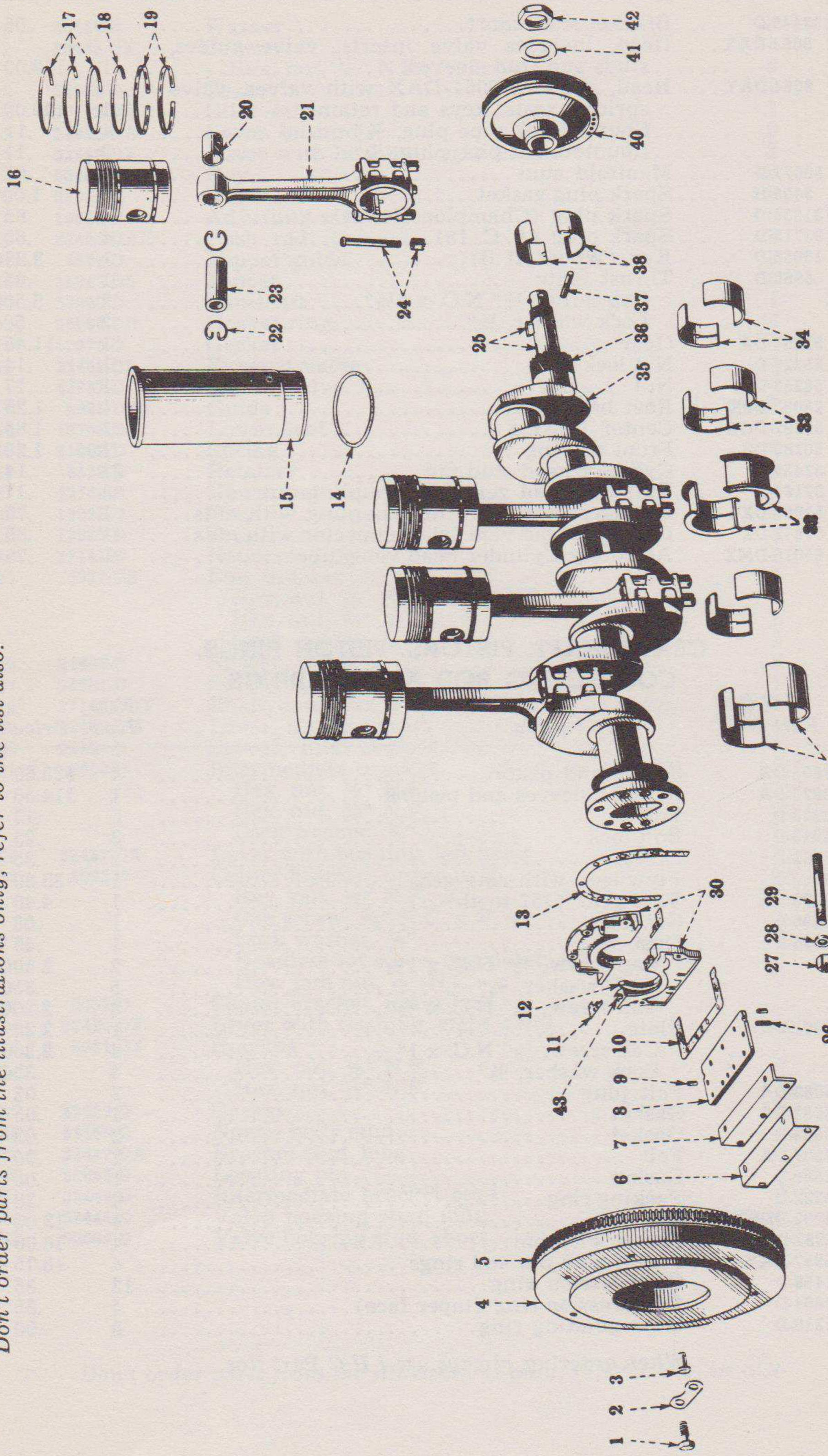

Don't order parts from the illustrations only; refer to the list also.

Unnumbered parts in the illustrations are the same as corresponding parts shown with numbers. .

CRANKSHAFT, PISTONS, PISTON RINGS, CONNECTING ROD AND BEARINGS

Item No.	IHC Part No.	Description	No. Used	Price
20	32942-D	Bushing	4	.60
21	42687-DX	Connecting rod, cap and bushing	4	22.50
	42687-DY	Connecting rod, cap, bushing and bearing	4	25.30
22	26916-D	Retainer	8	.12
23	53612-D	Piston pin (.005" oversize)	4	1.55
24	28737-DX	Bolt	16	.55
		Cotter, $\frac{3}{32}$ x 1"	16	.15C
25	PO-9696	Key (Woodruff No. 23)	2	6.00C
26	25094-D	Stud	3	.05
27	39523-D	Nut	12	.12
		Cotter, $\frac{1}{8}$ x $1\frac{3}{8}$"	12	.20C
28	39422-D	Washer	12	.03
29	43113-D	Stud	12	.45
30	39401-D	Oil seal retainer, with dowels and gasket (optional)	1	6.00
	62578-D	Oil seal retainer, with dowels and gasket (optional)	1	6.00
		Cap screw, $\frac{3}{8}$" N.C. x $1\frac{3}{8}$"	4	2.70C
		Cap screw, $\frac{3}{8}$" N.C. x $3\frac{1}{2}$"	2	5.90C
		Lock washer, $\frac{3}{8}$"	6	.35C
		Washer, $\frac{13}{32}$" I.D. x $\frac{3}{4}$" O.D. x No. 16 gauge	6	.20C
31	48759-D	Bearing, rear	1	5.75
	48763-D	Bearing, rear ($\frac{1}{32}$" undersize)	1	8.25
32	48758-D	Bearing, center	1	13.00
	48762-D	Bearing, center ($\frac{1}{32}$" undersize)	1	14.60
33	48757-D	Bearing, intermediate	2	5.10
	48761-D	Bearing, intermediate ($\frac{1}{32}$" undersize)	2	6.35
34	48756-D	Bearing, front	1	5.10
	48760-D	Bearing, front ($\frac{1}{32}$" undersize)	1	6.35
35	53401-DX	Crankshaft, with gear nut	1	137.50
	53402-DX	Crankshaft ($\frac{1}{32}$" undersize) with gear nut	1	137.50
36	25134-DA	Gear (27 teeth)	1	5.00
37	10319-D	Crank pin	1	.07
		Headless set screw, $\frac{5}{16}$" N.C. x $\frac{1}{2}$"	1	2.45C
38	42688-DAX	Connecting rod bearing	4	3.70
	42690-DAX	Connecting rod bearing (.030" undersize)	4	4.30
40	B-23483	Pulley	1	12.25
41	4254-DA	Nut lock	1	.12
42	4253-D	Nut	1	.55
43	25076-D	Dowel	2	.02
	9269-D	Crankshaft rear oil seal upper retainer (optional)	1	6.00
	4993-DA	Crankshaft rear oil seal upper retainer (optional)	1	6.00
		Cap screw, $\frac{3}{8}$" N.C. x $1\frac{3}{8}$"	4	2.70C
		Cap screw, $\frac{3}{8}$" N.C. x $3\frac{1}{2}$"	2	5.90C
		Lock washer, $\frac{3}{8}$"	6	.35C
		Washer, $\frac{13}{32}$" I.D. x $\frac{3}{4}$" O.D. x 16 ga.	6	.20C
	9270-DX	Crankshaft rear oil seal retainer, lower, with dowels (optional)	1	6.00
	4994-DAX	Crankshaft rear oil seal retainer, lower, with dowels (optional)	1	6.00
		Cap screw, $\frac{3}{8}$" N.C. x $1\frac{3}{8}$"	2	2.70C
		Lock washer, $\frac{3}{8}$"	2	.35C
		Washer, $\frac{13}{32}$" I.D. x $\frac{3}{4}$" O.D. x No. 16 gauge	2	.20C
	24909-D	Fuel supply pump drive pulley stud	2	.05
		Hex. nuts, $\frac{3}{8}$" N.F.	2	1.10C
		Lock washer, $\frac{3}{8}$"	2	.35C
	Q-3615	Clutch pilot bearing lubricator fitting (Lincoln No. 5045) (optional)	1	.05
	33794-D	Clutch pilot bearing lubricator fitting (Alemite No. 1650) (optional)	1	.23

When ordering, always use I H C Part Nos.

PARTS LIST

CRANKCASE

Unnumbered parts in the illustrations are the same as corresponding parts shown with numbers.

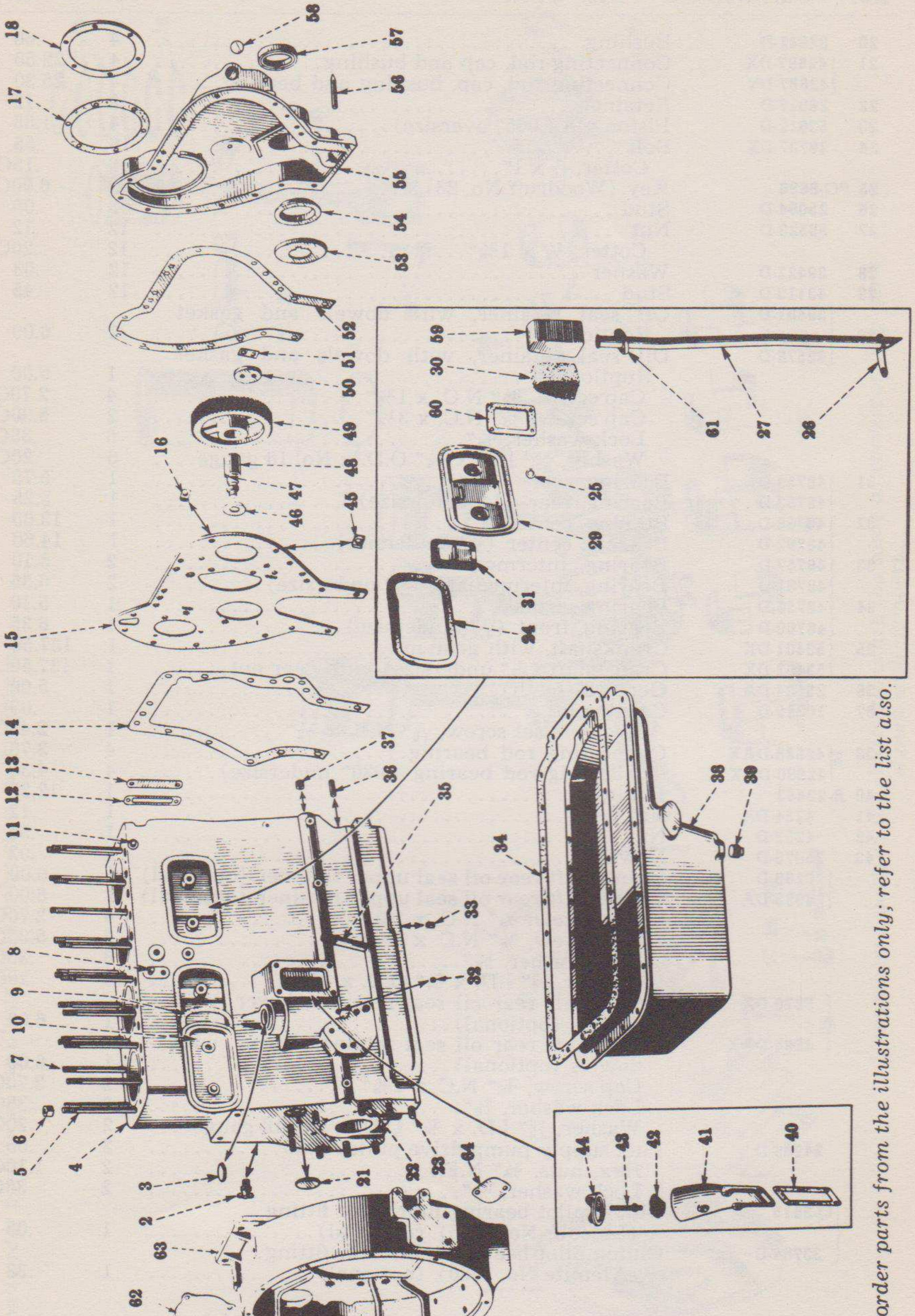

Don't order parts from the illustrations only; refer to the list also.

CRANKCASE

Item No.	IHC Part No.	Description	No. Used	Price
2	31729-D	Drain cock	1	$ .35
3	29565-D	Plug	1	.07
4	8463-DDX	Crankcase used with Bosch pump	1	198.00
	53644-DA	Crankcase used with I H C pump	1	198.00
		Pipe plug, 1/8"	1	
5	39810-D	Stud, long	13	.45
6	32454-D	Nut	21	.14
7	42717-D	Stud, short	8	.40
8	53643-D	Latch, bracket stud	1	.07
		Hex. nut, 3/8" N.F	1	1.10C
		Lock washer, 3/8"	1	.35C
9	39757-D	Gasket	1	.20
10	39756-D	Side plate, rear	1	.35
		Cap screw, 3/8" N.C. x 7/8"	2	2.20C
11	50826-D	Spring pin	1	.12
12	39762-D	Front plate gasket	1	.05
13	39761-D	Front plate	1	.12
		Cap screw, 3/8" N.C. x 7/8"	2	2.20C
		Lock washer, 3/8"	2	.35C
14	50478-D	Gasket	1	.17
15	50487-DX	Front plate, with lock with Bosch	1	8.65
	63279-DX	Front plate, with lock with I H C	1	8.65
		Cap screw, 3/8" N.C. x 3/4"	2	2.10C
		Cap screw, 1/2" N.C. x 1"	3	5.10C
16	50408-D	Bolt lock	2	.03
17	50829-D	Gasket	1	.12
18	8414-D	Fuel pump gear cover	1	1.05
		Cap screw, 5/16" N.C. x 7/8"	6	1.80C
		Lock washer, 5/16"	6	.25C
21	13439-V	Plug	1	.12
22	25086-DA	Dowel	2	.09
23	49952-D	Stud	9	.09
24	39757-D	Gasket	1	.20
25	58511-D	Washer	4	2.20C
26	49026-D	Clip	1	.05
27	59483-D	Breather pipe	1	.35
		Cap screw, 5/16" N.C. x 7/8"	2	1.80C
		Lock washer, 5/16"	2	.25C
29	59529-D	Side plate and breather	1	2.45
30	59482-D	Element	1	.17
31	59480-D	Baffle	1	.17
32	50410-DA	Plug	5	.09
33	52606-D	Plug (wood)	2	.03
34	25082-DD	Gasket	1	.85
35	50357-D	Sleeve	1	.55
36	52605-D	Dowel	2	.09
37	30397-D	Pipe plug	2	.09
38	8798-DAMX	Oil pan, with plugs	1	13.75
		Cap screw, 3/8" N.C. x 1 1/4"	23	2.50C
		Hex. nut, 3/8" N.F	3	1.10C
		Lock washer, 3/8"	26	.35C
39		Pipe plug, 3/4"	1	.09
40	42733-D	Gasket	1	.12
41	8029-D	Oil filler body	1	1.05
		Cap screw, 3/8" N.C. x 2 3/4"	1	4.30C
		Cap screw, 3/8" N.C. x 1"	3	2.30C
		Lock washer, 3/8"	4	.35C
42	50411-D	Screen	1	.12
43	28797-D	Stud	1	.12
		Hex. nut, 3/8" N.C.	1	1.10C
44	4819-D	Cap	1	.30
45	32370-D	Bolt lock	3	.09
46	25132-D	Nut lock	1	.05

When ordering, always use I H C Part Nos.

990620 O—52——21

CRANKCASE

Item No.	I H C Part No.	Description	No. Used	Price
47	29764-D	Dowel pin	1	.02
48	25138-DAX	Idler gear shaft	1	3.45
		Hex. jam nut, ¾" N.F.	1	5.00C
49	25140-DBX	Idler gear with bushing	1	7.90
50	25131-D	Thrust washer	1	.40
		Cap screw, 5/16" N.F. x ¾"	2	1.70C
51	25130-D	Bolt lock	1	.05
52	50486-D	Gasket	1	.30
53	36796-DA	Oil flinger	1	.17
54	46129-D	Oil deflector	1	.17
55	8413-DX	Front cover, with oil deflector, timing pointer and oil seal	1	11.55
		Cap screw, ½" N.C. x 1½"	7	5.90C
		Cap screw, ⅜" N.C. x 1"	3	2.30C
		Cap screw, ½" N.C. x 2"	2	6.70C
		Cap screw, ⅜" N.C. x 1½"	2	2.70C
		Lock washer, ½"	9	.50C
		Lock washer, ⅜"	5	.35C
56	48138-D	Timing pointer	1	.12
57	53872-D	Oil seal	1	1.05
58	13806-D	Welch plug, 1¼"	1	.05
59	8959-D	Breather body	1	.65
		Round head machine screw, No. 10—24" N.C. x ½"	4	.40C
		Lock washer, No. 10	4	.20C
60	59481-D	Breather body gasket	1	.05
61	59484-D	Breather pipe flange	1	
	13897-D	Distributor hole lock washer	1	
		Cap screw, 5/16" N.C. x ⅝"	1	1.60C
	46250-D	Front plate cap screw lock	1	.09
		Rivet, 3/16" x ⅜"	3	.15C
	59485-D	Push rod chamber side plate, front	1	
		Cap screw, ⅜" N.C. x ⅞"	2	2.20C
	57308-D	Engine gasket package	as req'd.	6.45
62	29371-D	Starter flange cover	1	.12
		Cap screw, ⅜" N.C. x ⅝"	3	2.00C
		Lock washer, ⅜"	3	.35C
63	8612-D	Flywheel housing	1	36.30
		Cap screw, ⅝" N.C. x 1¾"	2	10.40C
		Hex. nut, ⅝" N.C.	9	3.50C
		Lock washer, ⅝"	11	1.00C
64	25063-DA	Clutch pilot bearing lubricator cover	1	.05
		Cap screw, 5/16" N.C. x ½"	2	1.50C
		Lock washer, 5/16"	2	.25C

MANIFOLDS — INTAKE AND EXHAUST

Item No.	I H C Part No.	Description	No. Used	Price
	D-23948	Exhaust pipe (Galion Part)	1	$3.50
1	8649-D	Exhaust pipe flange	1	1.75
2	50688-D	Gasket, end	1	.15
		Hex. nut, ½" N.C.	3	2.20C
3	39397-D	Exhaust pipe flange gasket	1	.05
4	50677-D	Stud	3	.07
5	50687-D	Gasket, center	1	.18
6	8055-DX	Exhaust manifold, with studs	1	6.35
		Hex. nut, ½" N.C.	6	2.20C

When ordering, always use I H C Part Nos.

MANIFOLDS — INTAKE AND EXHAUST

Unnumbered parts in the illustrations are the same as corresponding parts shown with numbers.

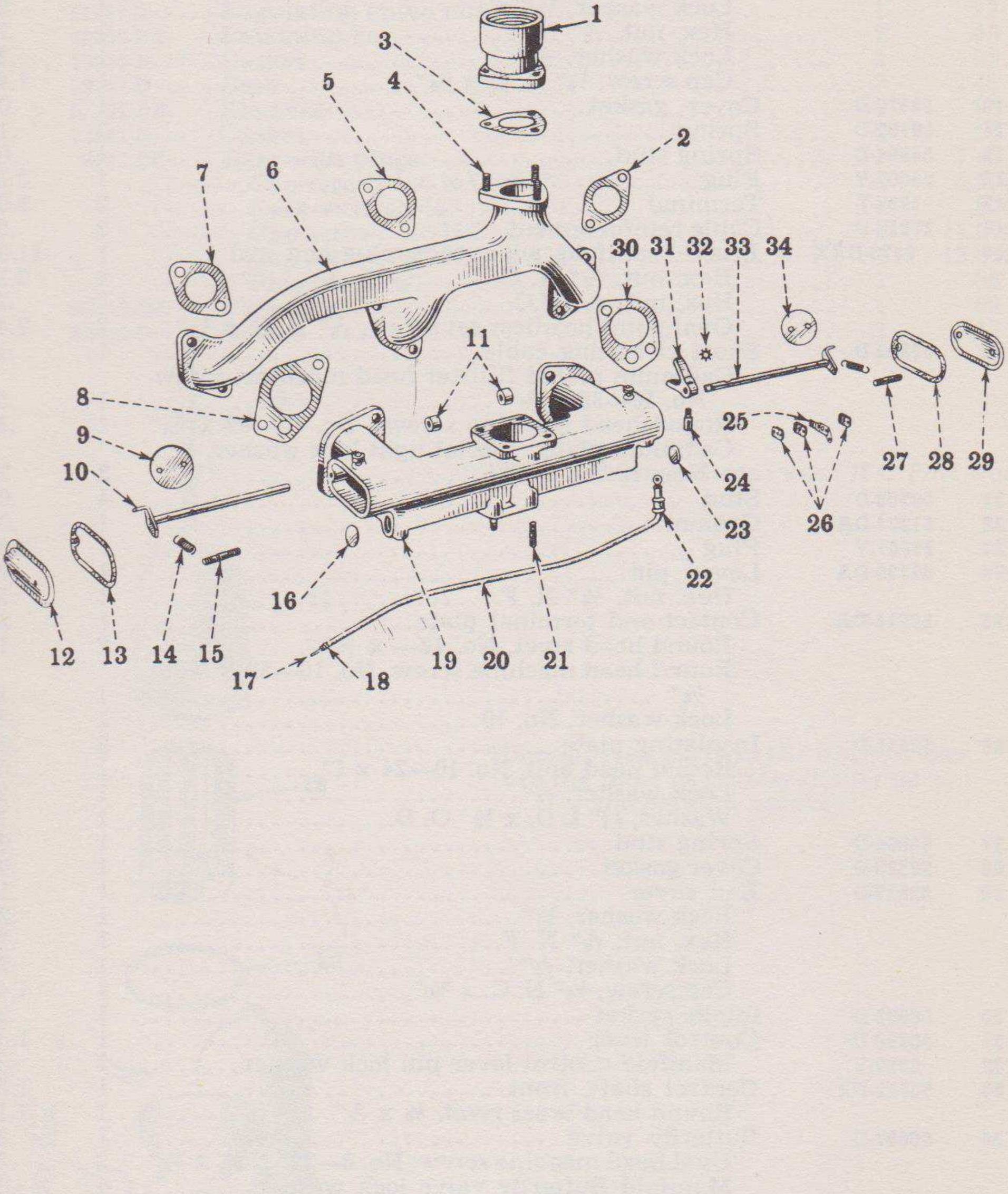

Don't order parts from the illustrations only; refer to the list also.

MANIFOLDS — INTAKE AND EXHAUST

Item No.	IHC Part No.	Description	No. Used	Price
7	50688-D	Gasket, end	1	.15
8	50689-D	Intake gasket	1	.20
9	50697-D	Butterfly valve	1	.45
		Machine screw, No. 8—32" N. C. x 3/8"	2	.28C
10	53673-DX	Control shaft, rear	1	1.55
11	53083-D	Seal	2	.60
12	52519-D	End cover	1	.17
		Lock washer, 1/4"	1	.25C
		Hex. nut, 5/16" N. F.	1	.75C
		Lock washer, 5/16"	1	.25C
		Cap screw, 1/4" N. C. x 3/4"	1	1.40C
13	52520-D	Cover gasket	1	.05
14	56107-D	Spring	2	.17
15	54964-D	Spring stud	1	.07
16	23007-V	Plug	1	3.30C
17	1924-T	Terminal	2	3.00C
18	27618-D	Cable reinforcement	2	.50C
19	8473-DAX	Intake manifold, with studs, plug and seal	1	11.00
		Hex. nut, 1/2" N. C.	4	2.20C
		Hex. nut, 5/16" N.C.	2	.75C
		Oval point headless set screw, 5/16" N. C. x 3/4"	2	2.40C
20	53262-D	Short circuiting cable	1	.45
		Cadmium plated fillister head machine, screw No. 10—32 x 5/16"	1	.50C
		Round head machine screws, No. 10—32 x 3/8"	1	.38C
		Cadmium plated special light lock washer, No. 10	2	.26C
21	50705-D	Stud	4	.05
22	51234-DA	Grommet	1	.05
23	23007-V	Plug	1	3.30C
24	42739-DA	Lever pin	1	.17
		Hex. nut, 1/4" N. F.	1	.50C
25	52515-DA	Contact and terminal plate	1	.22
		Round head rivet, No. 12— x 3/16"	2	.15C
		Round head machine screw, No. 10—32 N. F. x 1/4"	1	.35C
		Lock washer, No. 10	1	.20C
26	52514-D	Insulating plate	2	.03
		Round head bolt, No. 10—24 x 1"	1	.50C
		Lock washer, 3/16"	1	.20C
		Washer, 13/64" I. D. x 1/2" O. D.	1	.15C
27	54964-D	Spring stud	1	.07
28	52520-D	Cover gasket	1	.05
29	52519-D	End cover	1	.17
		Lock washer, 1/4"	1	.25C
		Hex. nut, 5/16" N. F.	1	.75C
		Lock washer, 5/16"	1	.25C
		Cap screw, 1/4" N. C. x 3/4"	1	1.40C
30	50689-D	Intake gasket	1	.20
31	50698-D	Control lever	1	1.05
32	2853-Y	Manifold control lever pin lock washer	1	.35C
33	53672-DX	Control shaft, front	1	1.55
		Round head brass rivet, 1/8 x 3/16"	1	1.10C
34	50697-D	Butterfly valve	1	.45
		Oval head machine screw, No. 8—32" N.C. x 1/2"	2	.30C
		Manifold Butterfly valve lock washer	4	.01

When ordering, always use I H C Part Nos.

LUBRICATING OIL FILTER

Item No.	I H C Part No.	Description	No. Used	Price
	51824-D	Oil filter (includes Item Nos. 3 and 5 thru 14) . . .	1	$28.60
1	25352-D	Base bolt gasket	1	.02
2	23007-V	Plug (1")	2	3.30C
3	45285-DA	Regulating valve	1	.30
4	23139-V	Plug (2")	1	.09
5	45286-D	Valve spring	1	.17
6	28781-D	Gasket	1	.05
7	51205-D	Regulating valve nut	1	.17
9	46606-DX	Retaining bar	2	.85
10	13839-D	Gasket	2	.05
11	13842-D	Case	2	2.45
12	51183-DA	Element	2	.95
13	13841-D	Gasket	2	.17
14	8021-DX	Base with plugs	1	7.45
		Cap screw, ½" N.C. x 2"	1	6.70C
		Lock washer, ½"	2	.50C
		Cap screw, ½" N.C. x 4"	1	11.00C
		Cap screw, ½" N.C. x 4½"	1	13.40C
		Pipe plug, ⅜"	1	.06
15	50410-DA	Pipe plug	1	.09
16	50404-D	Gasket	1	.17

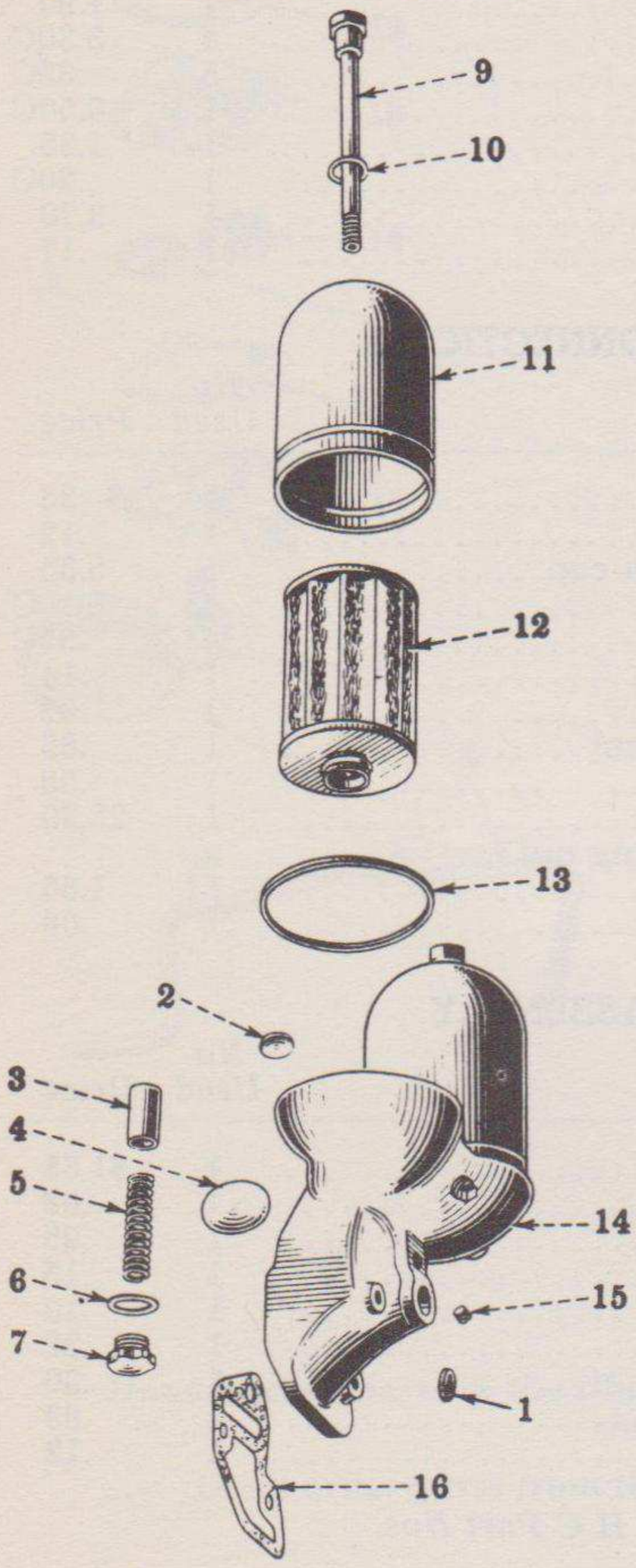

When ordering, always use I H C Part Nos.

Unnumbered parts in the illustrations are the same as corresponding parts shown with numbers.

Don't order parts from the illustrations only; refer to the list also.

LUBRICATING OIL PUMP AND OIL LEVEL GAUGE

Item No.	I H C Part No.	Description	No. Used	Price
	57484-D	Lubricating oil pump, complete (includes Item Nos. 1 thru 18, less 4 and 9)	1	$30.55
1	50371-D	Body	1	9.00
2	50375-D	Idler gear	1	3.00
3	46053-D	Dowel	1	.05
4	50377-DX	Return pipe	1	1.90
		Cap screw, 3/8" N.C. x 3/4"	2	2.10C
		Lock washer, 3/8"	2	.35C
5	5312-T3	Pinion pin	1	.03
6	46054-DA	Drive pinion	1	2.85
7	13021-D	Key (Woodruff No. 6)	2	
8	10961-D	Body cap screw	2	.12
		Lock washer, 1/2"	2	.50C
9	55303-DX	Oil level gauge	1	1.10
10	50372-DX	Drive shaft, with pins	1	2.75
11	32319-D	Gear pin	1	.03
12	51223-D	Gasket	1	.05
13	8008-DX	Gear housing, with dowel	1	4.15
14	51515-D	Auxiliary body gear (12 teeth)	1	2.45
15	51516-D	Auxiliary idler gear (12 teeth)	1	2.45
16	50376-D	Gasket	1	.05
17	8009-D	Cover	1	1.90
		Cap screw, 3/8" N.C. x 2"	4	3.30C
		Lock washer, 3/8"	5	.35C
		Cap screw, 3/8" N.C. x 3"	1	6.50C
18	42791-DA	Pump float	1	1.35
		Cotter, 1/8" x 1 1/2"	1	.20C
19	50374-D	Body Gear (12 teeth)	1	3.70
	51203-DA	Oil level gauge pipe	1	.17

GASOLINE TANK AND CONNECTIONS

Item No.	I H C Part No.	Description	No. Used	Price
1	23995-DA	Cap	1	$ .35
2	23977-DA	Cap gasket	1	.12
3	41574-DCX	Gasoline tank, complete with cap	1	5.50
		Cap screws, 3/8" N.C. x 3/4"	4	2.10C
		Lock washers, 3/8"	4	.35C
4	66360-D	Gasoline pipe clip	1	.14
5	16445-D	Gasoline pipe clip felt	1	.02
6	60014-DAX	Gasoline pipe with coupling nut	1	.65
7	29899-D	Gasoline pipe coupling nut	1	.08
8	61140-DM	Carburetor	1	25.30
9	51066-DBX	Gasoline strainer with coupling nut (See Detail List)	1	1.65
10	29899-D	Gasoline pipe coupling nut	1	.08

GASOLINE STRAINER ASSEMBLY

Item No.	I H C Part No.	Description	No. Used	Price
	51066-DBX	Gasoline strainer, with nut	1	$1.65
1	29899-D	Coupling nut	1	.08
2	54486-D	Top or body	1	.95
3	13194-D	Screen	1	.15
4	51344-V	Glass	1	.10
5	17564-D	Bail or strap	1	.22
6	52855-D	Valve	1	.30
7	13183-D	Gasket	1	.03
8	17565-DA	Nut and cap	1	.12

When ordering, always use I H C Part Nos.

LUBRICATING OIL PUMP AND OIL LEVEL GAUGE

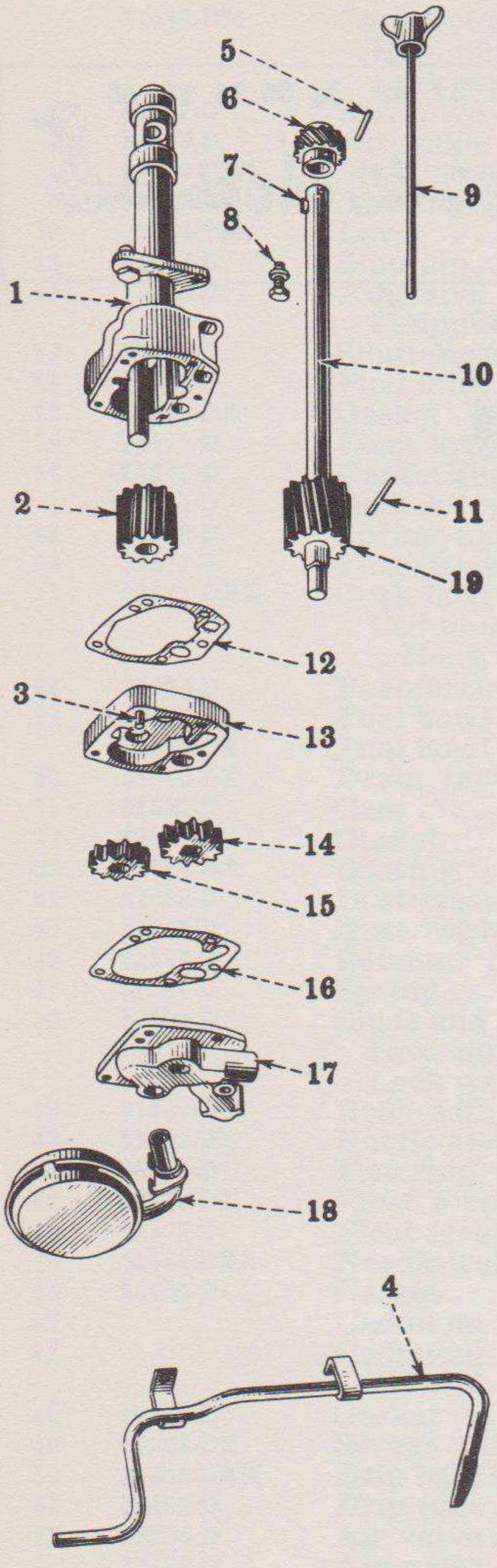

GASOLINE TANK AND CONNECTIONS

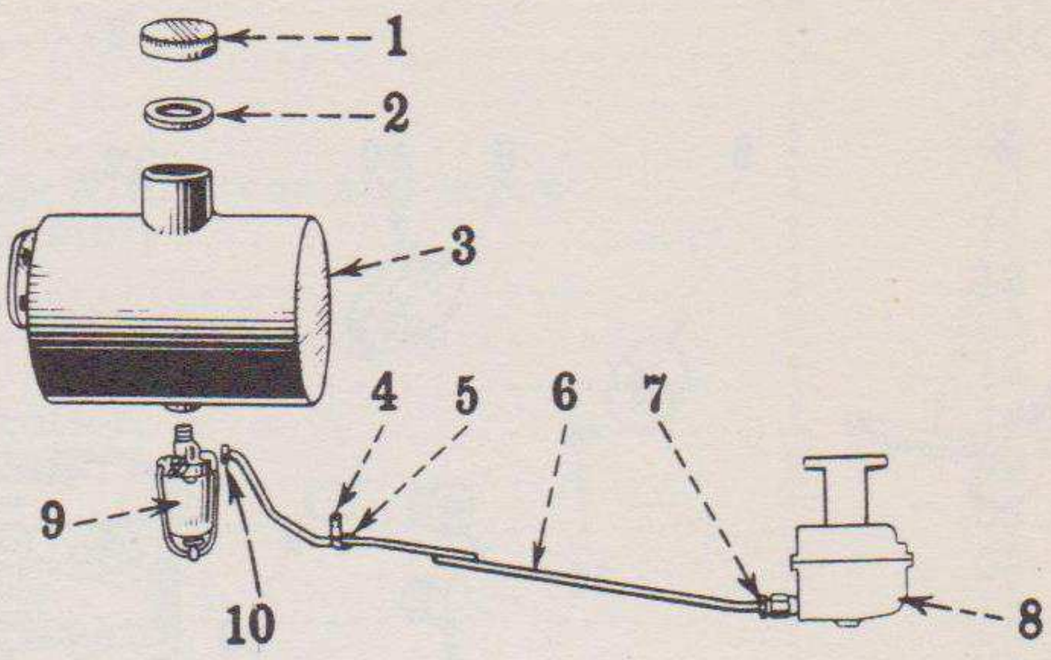

GASOLINE STRAINER ASSEMBLY

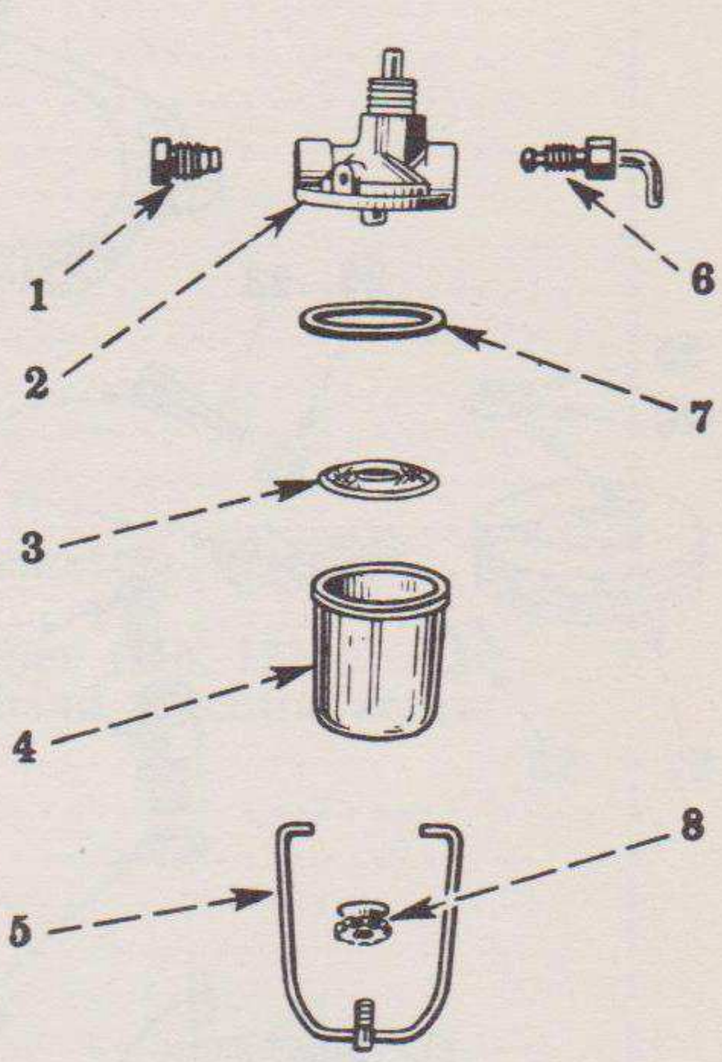

Unnumbered parts in the illustrations are the same as corresponding parts shown with numbers.

Don't order parts from the illustrations only; refer to the list also.

PARTS LIST

DIESEL DUAL MANIFOLD STARTING CARBURETOR

Unnumbered parts in the illustrations are the same as corresponding parts shown with numbers.

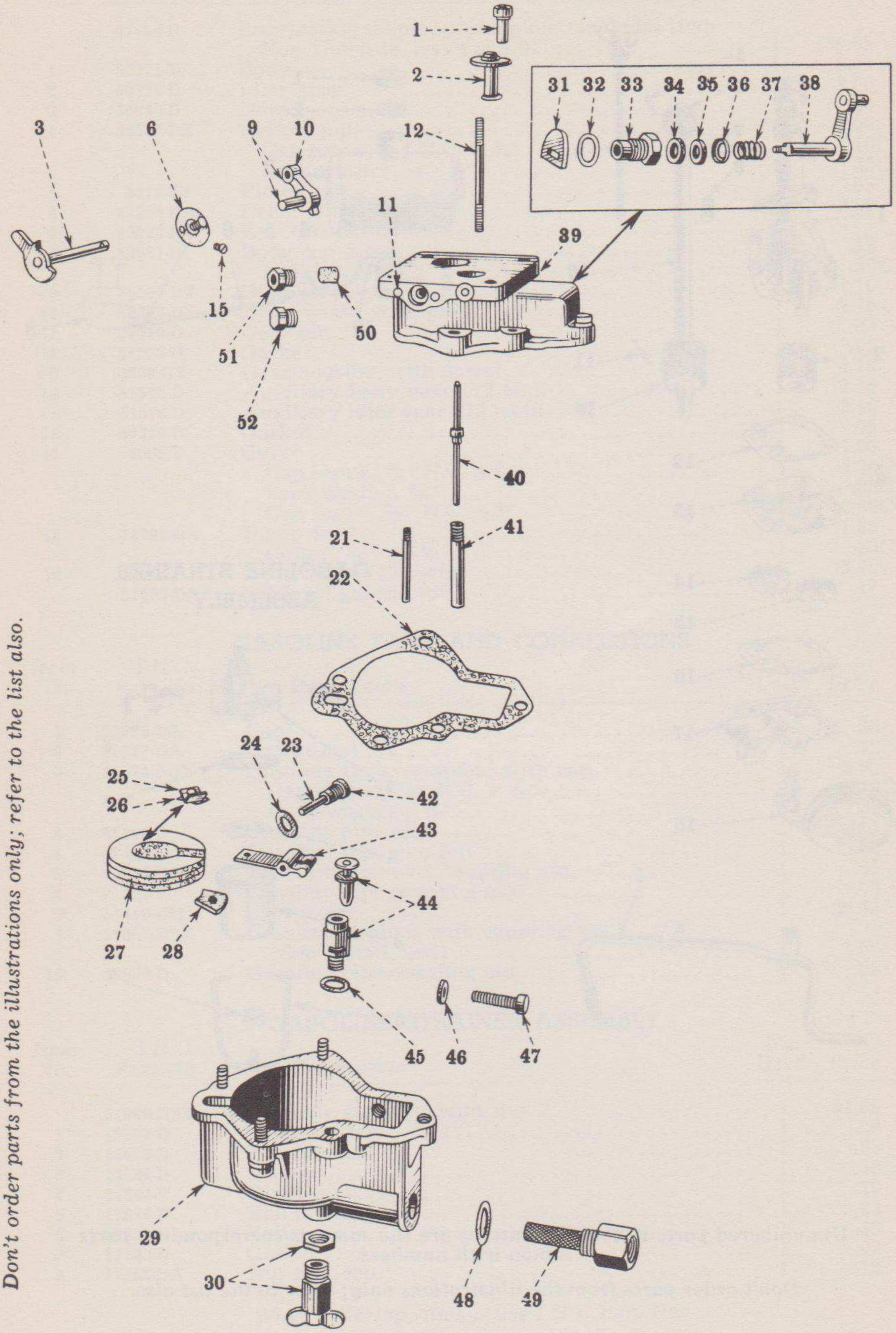

Don't order parts from the illustrations only; refer to the list also.

DIESEL DUAL MANIFOLD STARTING CARBURETOR

Item No.	I H C Part No.	Description	No. Used	Price
	61140-DM	Carburetor (IHC)	1	$25.30
		Hex. nut, 5/16" N.F	4	.75C
		Lock washer, 5/16"	4	.25C
1	50807-D	Air valve collar	1	.09
2	56679-D	Air valve assembly	1	.35
3	61143-DM	Shaft assembly, long, with lever and screw	1	.75
6	56542-DX	Starting shutter assembly	1	.12
10	9154-DM	Lever	1	.12
11	45110-D	Stop pin	2	.03
12	53840-D	Air valve guide	1	.12
		Cadmium plated cotter, 1/16" x 3/4"	1	.13C
15	31636-D	Shutter screw	2	.02
21	50803-D	Fuel inlet tube	1	.05
22	32606-DA	Gasket	1	.05
23	24672-D	Float lever pivot	1	.12
24	25948-D	Gasket (optional)	1	.05
	59241-D	Gasket (optional)	1	.03
25	32578-D	Spring, upper leaf	1	.12
26	32577-D	Float lever spring, lower leaf	1	.12
27	32572-DAX	Coak float	1	.85
		Cadmium plated round head slotted screw, No. 4, 36 x 7/16"	1	.30C
28	32574-D	Reenforcing plate	1	.05
29	5051-DX	Fuel bowl (optional)	1	2.55
	9390-DX	Fuel bowl (optional)	1	2.55
30	58840-DX	Drain valve assembly with lock nut	1	.35
31	32582-D	Cam	1	.05
32	58836-D	Gasket	1	.05
33	32585-DA	Bearing	1	.30
34	32588-D	Dust washer	1	.03
35	32588-D	Dust washer	1	.03
36	32587-D	Retainer	1	.03
37	32586-D	Spring	1	.05
38	50801-D	Shaft and lever assembly	1	.55
		Hex. nut, No. 8—32	1	.30C
		Lock washer, No. 8	1	.20C
39	61141-DM	Body with stop pin	1	5.90
40	53837-DX	Nozzle and tube	1	.22
41	53836-D	Metering well	1	.30
42	32576-DX	Float pivot screw	1	.17
43	32575-D	Float lever	1	.35
44	32581-DXA	Needle valve cage with gasket	1	.75
45	25948-D	Gasket	1	.05
46		Cadmium plated lock washer (No. 12)	5	.25C
47		Cadmium plated fillister head machine screw (No. 12—24 x 7/8")	5	.91C
48	18377-D	Gasket	1	.05
49	29902-DX	Screen retainer	1	.35
50	27445-DAX	Drip hole filler	1	.09
51	50802-D	Drip tube adapter	1	.17
52	58835-D	Air valve control plug	1	.09
	27452-D	Air valve spring	1	.40
	35691-DX	Fuel bowl assembly	1	7.00
	51704-D	Drain tube clip	1	.07
	53079-D	Float and lever assembly	1	1.00
	53459-DA	Carburetor gasket	1	.05
	58837-D	Drain valve lock nut	1	.07
	58843-DX	Drain trough	1	.40
	58859-DX	Drain tube and nut	1	.45
	25038-HA	Drain tube nut	1	.05

When ordering, always use I H C Part Nos.

DIESEL DUAL MANIFOLD STARTING CARBURETOR

Item No.	I H C Part No.	Description	No. Used	Price
	25969-DA	Starting shutter shaft, short	1	.30
	32592-D	Starting shutter lever swivel washer	1	.05
	61142-DM	Starting shutter shaft hole plug	1	.03
	61144-DM	Starting shutter shaft, long	1	.30
	61145-DM	Starting shutter level swivel	1	.06
	61146-DM	Starting lever tube holder	1	.45

PRIMER AND CONNECTIONS

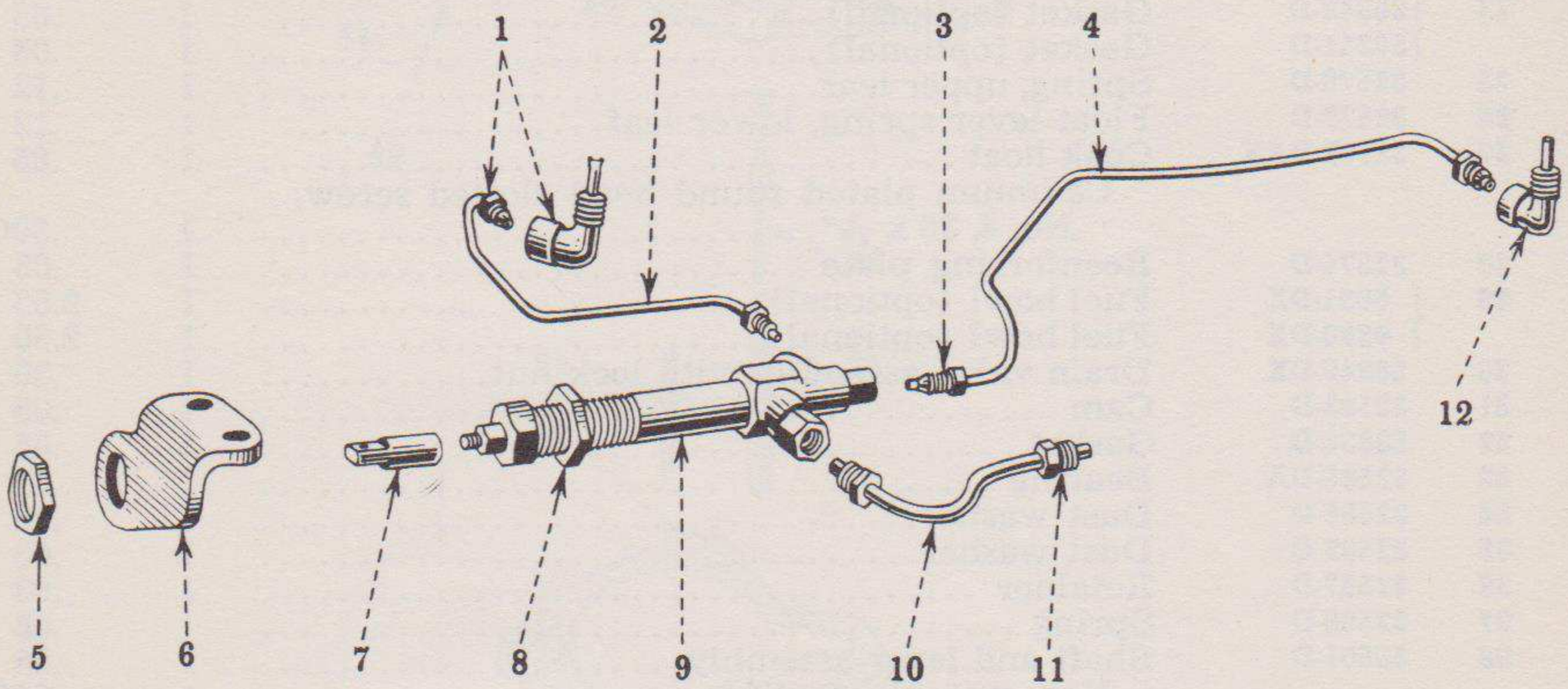

Item No.	I H C Part No.	Description	No. Used	Price
1	50683-DX	Elbow and nut	2	$ .45
2	53387-DX	Pipe, rear, and nut	1	.35
3	36092-D	Nut	4	.07
4	53386-DX	Pipe, front, and nut	1	.40
5	42215-D	Nut	1	.12
6	50682-D	Bracket	1	.12
		Cap screw, 5/16" N.C. x 3/4"	2	1.70C
		Lock washer, 5/16"	2	.25C
7	42772-D	Control rod, end	1	.30
8	52215-D	Nut	1	.12
9	53136-D	Primer (optional)	1	3.55
	54692-DA	Primer (optional)	1	3.55
10	53388-DX	Inlet tube and nut	1	.35
11	25038-HA	Inlet tube nut	2	.05
12	50683-D	Elbow	2	.45

When ordering, always use I H C Part Nos.

Unnumbered parts in the illustrations are the same as corresponding parts shown with numbers.

STARTING VALVES AND SHAFT

Unnumbered parts in the illustrations are the same as corresponding parts shown with numbers.

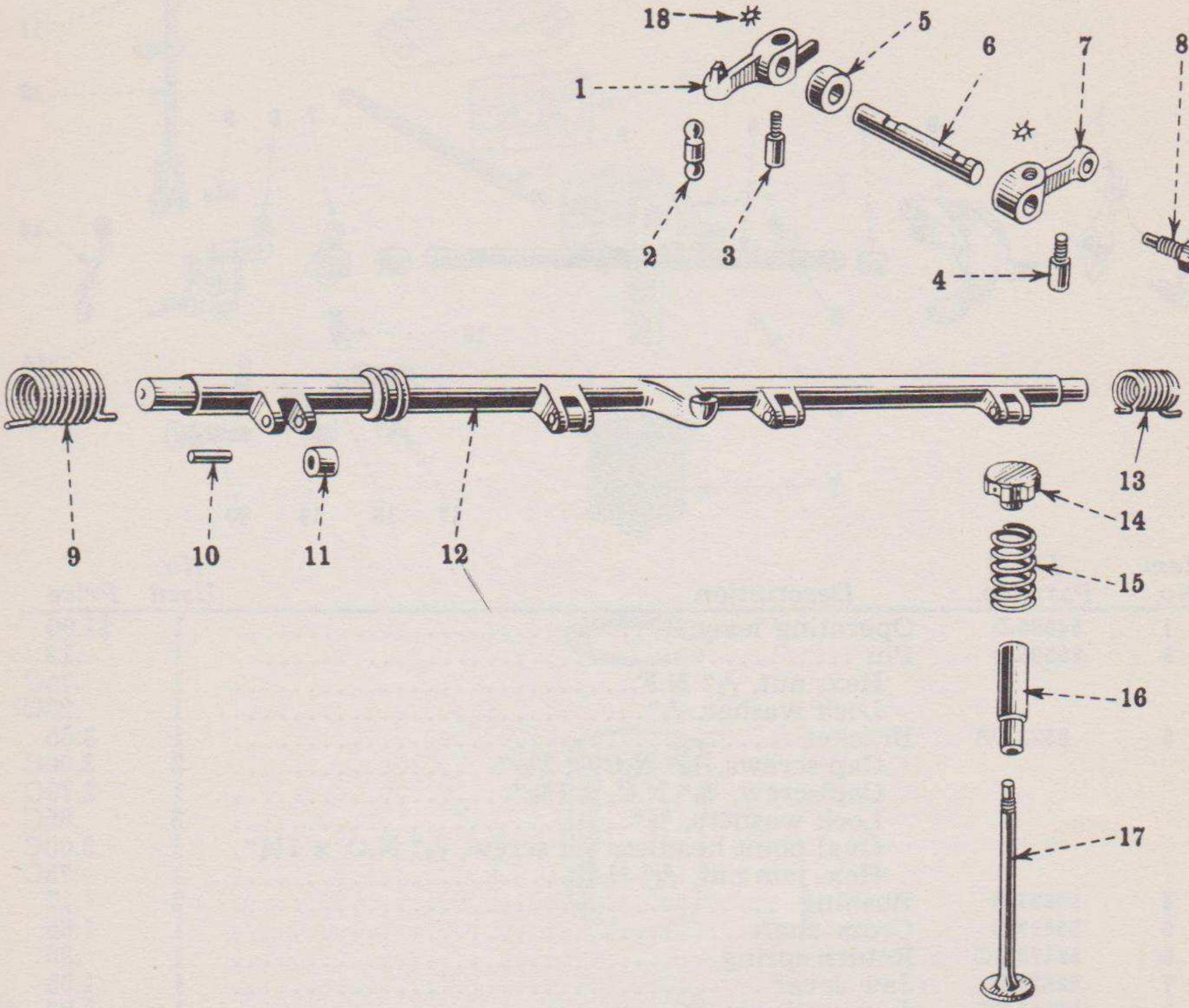

Item No.	*I H C Part No.*	*Description*	*No. Used*	*Price*
1	50673-D	Lever	1	$ .90
2	50678-D	Push rod	1	.22
3	42739-DA	Pin	1	.17
		Hex. nut, ¼" N.F.	1	.50C
4	42739-DA	Pin	1	.17
		Hex. nut, ¼" N.F.	1	.50C
5	42746-D	Oil seal	1	.60
6	50672-D	Operating shaft	1	.22
7	53413-D	Lever, outer	1	.70
8	50674-D	Lever stop	1	.09
		Lock washer, ⅜"	1	.35C
9	46213-D	Shaft spring, rear	1	.17
10	24917-D	Roller pin	4	.05
11	24916-D	Cam roller	4	.35
12	50670-DX	Starting valve shaft, with roller and pin	1	6.85
13	46212-D	Shaft spring, front	1	.17
14	42750-D	Retainer	4	.85
		Cotter, $\frac{3}{32}$" x 1½"	4	.15C
15	32479-D	Valve spring	4	.17
16	5024-DBR	Valve guide	4	1.10
17	42749-D	Valve	4	1.70
18	2853-Y	Starting valve operating shaft pin lock washer	1	.35C

When ordering, always use I H C Part Nos.

CROSS SHAFT

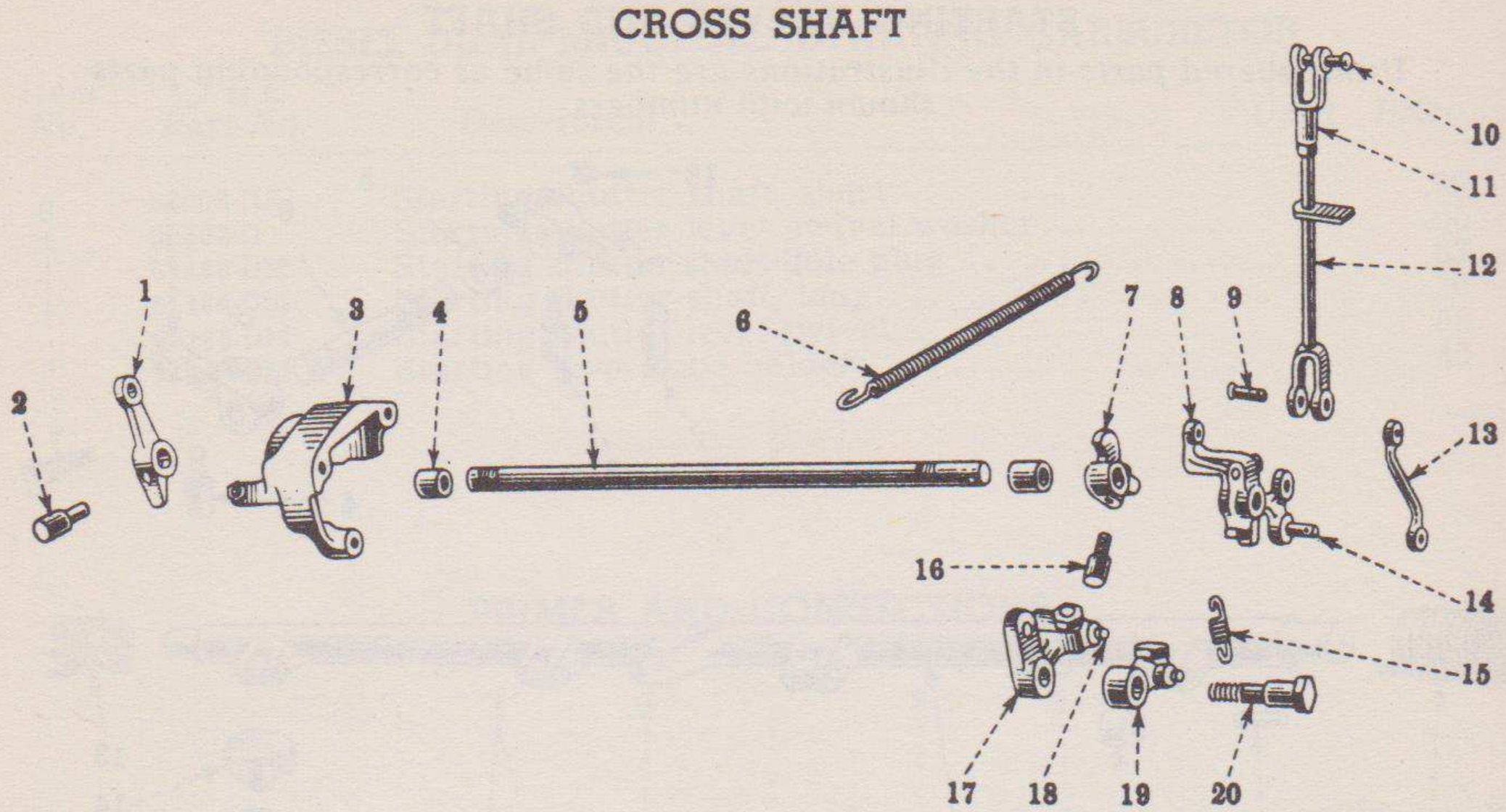

Item No.	*I H C Part No.*	*Description*	*No. Used*	*Price*
1	54086-D	Operating lever	1	$1.00
2	20586-D	Pin	1	.12
		Hex. nut, $\frac{5}{16}$" N.F.	1	.75C
		Lock washer, $\frac{5}{16}$"	1	.25C
3	8525-DA	Bracket	1	3.85
		Cap screws, $\frac{3}{8}$" N.C. x 2$\frac{1}{2}$"	2	3.90C
		Cap screw, $\frac{3}{8}$" N.C. x 1$\frac{3}{8}$"	1	2.70C
		Lock washers, $\frac{3}{8}$"	3	.35C
		Oval point headless set screw, $\frac{5}{16}$" N.C. x 1$\frac{1}{4}$"	1	3.00C
		Hex. jam nut, $\frac{5}{16}$" N.C.	1	.75C
4	50827-D	Bushing	2	.17
5	53417-D	Cross shaft	1	1.65
6	52176-DC	Return spring	1	.35
7	52626-D	Jaw lever	1	1.05
8	53410-DX	Jaw, with pin	1	2.20
		Oval point headless set screw, $\frac{5}{16}$" N.C. x $\frac{1}{4}$"	1	3.00C
		Hex. jam nut, $\frac{5}{16}$" N.C.	1	.75C
		Washer, $\frac{21}{32}$" I.D. x 1" O.D.	1	.40C
		Cotter, $\frac{1}{8}$" x 1"	1	.15C
9	19306-D	Pin	1	.02
		Cotters, $\frac{3}{32}$" x $\frac{5}{8}$"	1	.10C
10	19306-D	Pin	1	.02
		Cotters, $\frac{3}{32}$" x $\frac{5}{8}$"	1	.10C
11	19305-D	Adjusting yoke	1	.17
12	53416-D	Operating rod	1	.55
		Hex. nut, $\frac{5}{16}$" N.F.	1	.75C
13	53414-DX	Carburetor control link	1	.60
		Washers, $\frac{9}{32}$" I.D. x $\frac{5}{8}$" O.D.	2	.15C
		Cotters, $\frac{1}{16}$" x $\frac{7}{16}$"	2	.10C
14	53411-D	Jaw pin	1	.05
15	52624-D	Spring	1	.12
16	20586-D	Pin	1	.12
		Hex. nut, $\frac{5}{16}$" N.F.	1	.75C
		Lock washer, $\frac{5}{16}$"	1	.25C
17	8617-DX	Latch bracket	1	1.35
		Flat head set screw, $\frac{3}{8}$" N.C. x 1$\frac{1}{2}$"	1	3.95C
		Hex. jam nut, $\frac{3}{8}$" N.C.	1	1.10C
18	52623-D	Latch spring pin	2	.05
19	52621-DX	Latch and spring pin	1	1.10
20	55354-DA	Latch pin	1	.17

When ordering, always use I H C Part Nos.

WATER TRAP

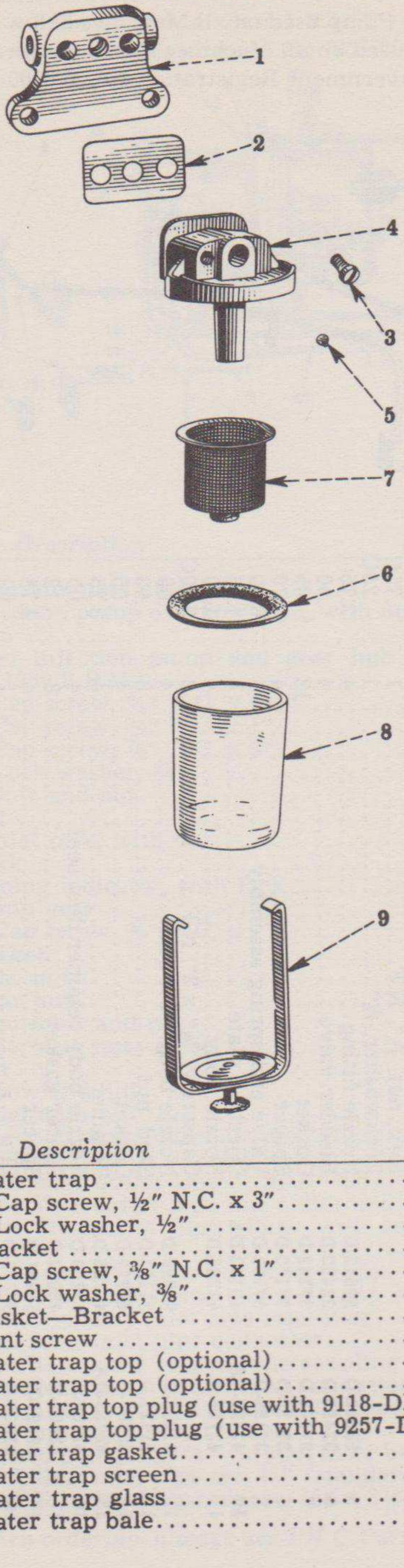

Item No.	*I H C Part No.*	*Description*	*No. Used*	*Price*
	60870-D	Water trap	1	$5.50
		Cap screw, ½" N.C. x 3"	1	8.70C
		Lock washer, ½"	1	.50C
1	**8221-D**	Bracket	1	.55
		Cap screw, ⅜" N.C. x 1"	2	2.30C
		Lock washer, ⅜"	2	.35C
2	**51527-D**	Gasket—Bracket	1	.03
3	**60871-D**	Vent screw	1	.25
4	**9118-DX**	Water trap top (optional)	1	1.10
	9257-DX	Water trap top (optional)	1	1.10
5	**24805-D**	Water trap top plug (use with 9118-DX)	1	2.20C
	20345-D	Water trap top plug (use with 9257-DX)	1	2.20C
6	**60876-D**	Water trap gasket	1	.03
7	**60872-D**	Water trap screen	1	.95
8	**60877-D**	Water trap glass	1	.15
9	**60878-D**	Water trap bale	1	.95

INJECTION NOZZLES AND PIPES

(Bosch Injection Pump used on all Machines below Serial M-3465.)
(I.H.C. Injection Pump used on all Machines starting with Serial M-3465 and up.)
Government Registration No. W810081

Item No.	I.H.C. Part No. Used with I.H.C. Injection Pump	I.H.C. Part No. Used with Bosch Injection Pump	Description	No. Used	Price
	63040-D	50620-D	Set of 4 injection pipes	1	$14.30
	52613-D	52613-D	Injection nozzle (includes items 5 thru 11)	4	13.75
1	63041-DX	50621-DX	Pipe with nuts, No. 1	1	3.65
2	63042-DX	50622-DX	Pipe with nuts, No. 2	1	3.65
3	63043-DX	50623-DX	Pipe with nuts, No. 3	1	3.65
4	63044-DX	50624-DX	Pipe with nuts, No. 4	1	3.65
			Hex. nut, 5/16", N.F.	1	.75C
			Lockwasher, 5/16"	1	.25C
5	52612-D	52612-D	Nozzle fitting	4	2.75
6	32493-D	32493-D	Bleeder valve	4	.30
7	37148-D	37148-D	Gasket	12	.05
8	37150-D	37150-D	Spacer	4	.70
9	37152-D	37152-D	Valve and spring assembly	4	6.60
10	43192-DA	43192-DA	Injection plate	4	1.35
11	42766-D	42766-D	Nozzle body	4	1.60
			Capscrew, 3/8" x 2", N.F.	8	3.30C
12	61208-D	61208-D	Nozzle body dust seal	4	.05
13	31121-D	31121-D	Stud nut	8	.03
14	42767-D	42767-D	Gasket	4	.05
15	42765-DA	42765-DA	Retainer	4	3.25
16	61209-D	61209-D	Nozzle body retainer dust seal	4	.05
17	43002-D	43002-D	Spacer gasket	8	.12
18	56291-D	56291-D	Spacer	4	2.75
19	63035-D	50626-D	Clip	1	.09
			Capscrew, 5/16" x 3/4", N.C.	1	1.70C
			Lockwasher, 5/16"	1	.25C
20	27927-DA	27927-DA	Brace washer	1	.07

When ordering, always use I H C Part Nos.

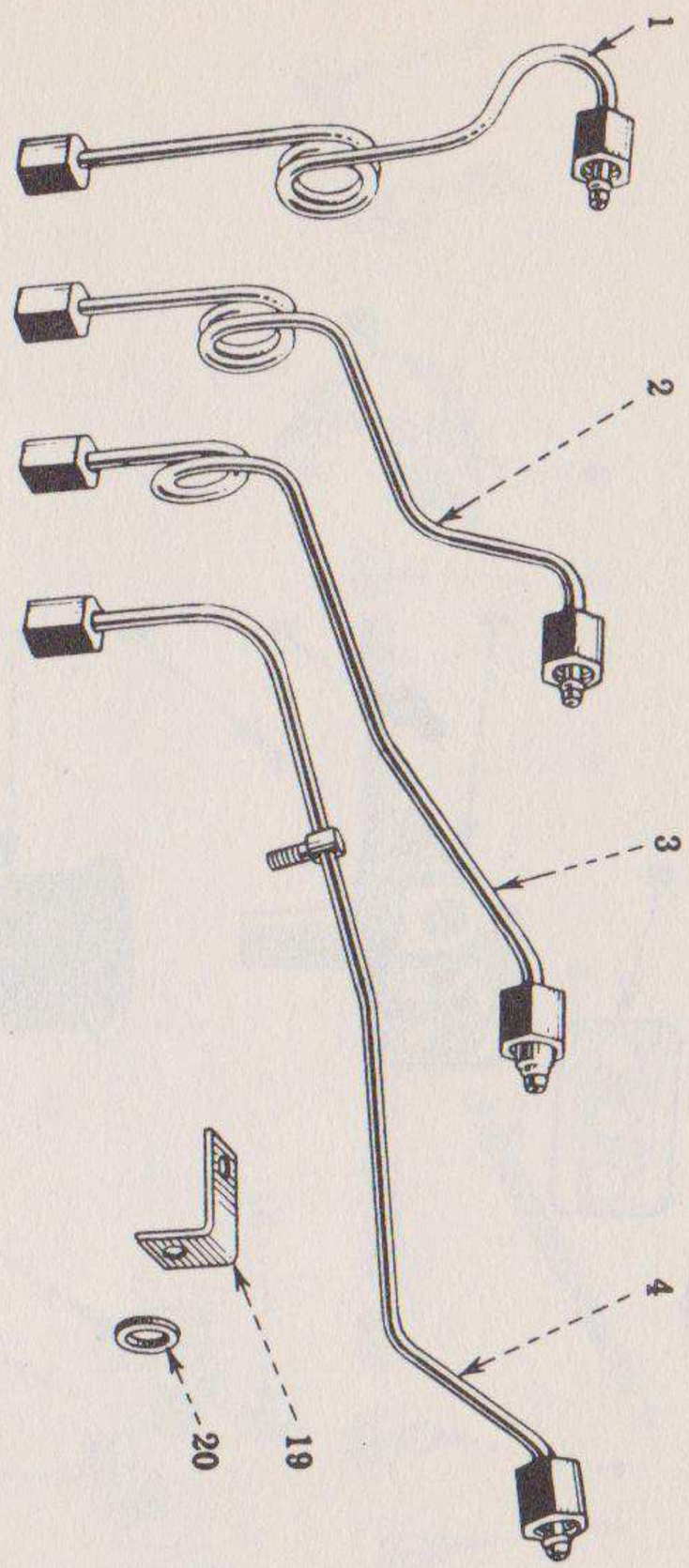

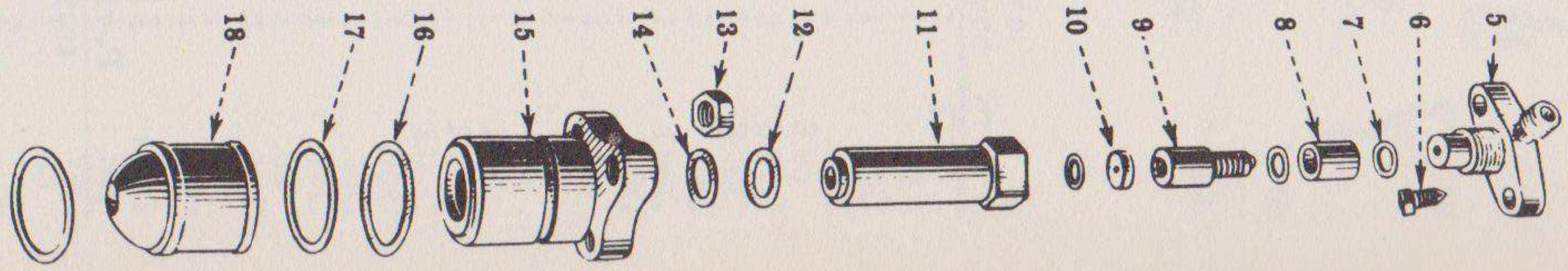

BOSCH INJECTION PUMP AND CONNECTIONS

Prior to Grader Serial M3465
Government Registration No. W810086

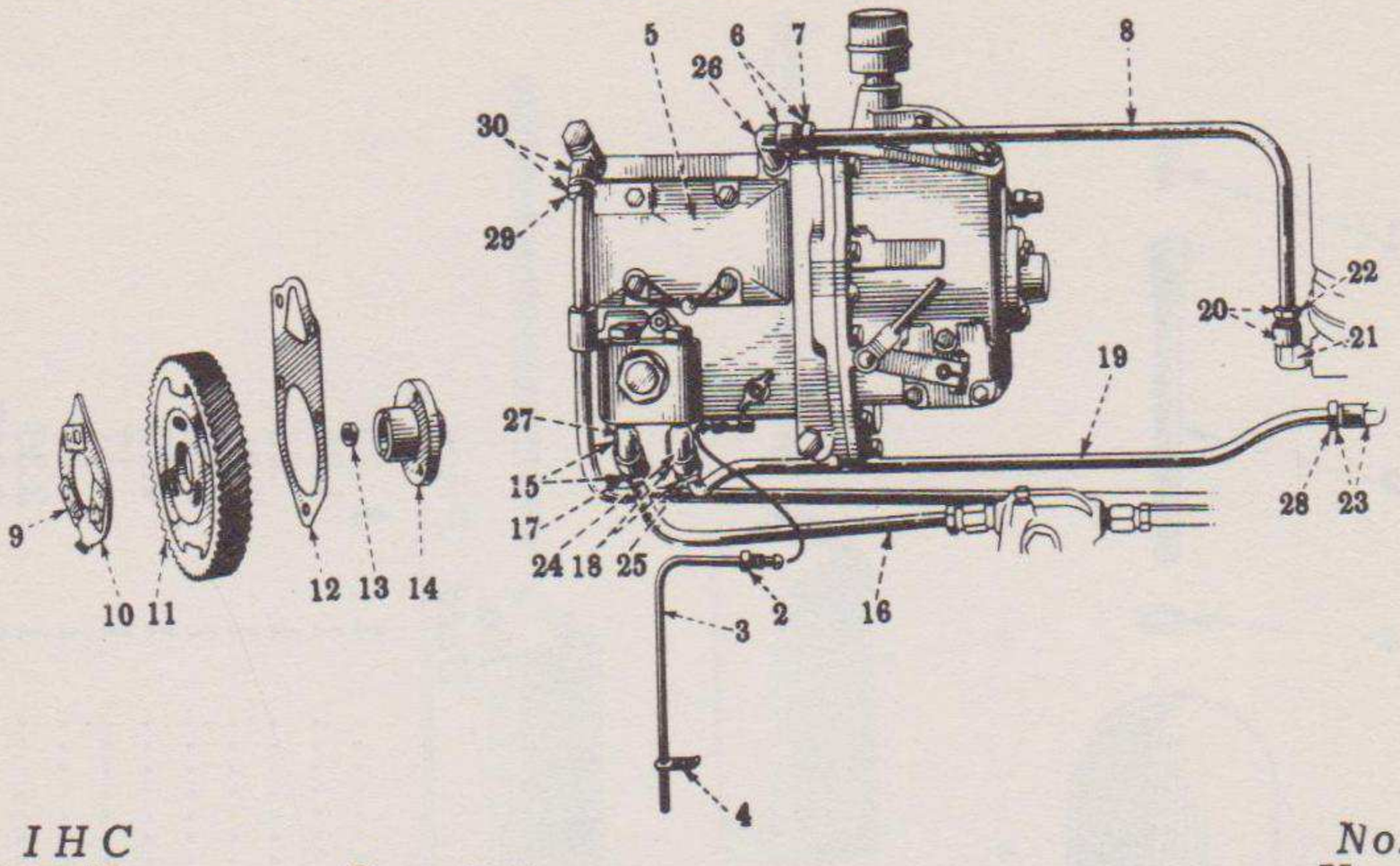

Item No.	*I H C Part No.*	*Description*	*No. Used*	*Price*
2	29898-D	Overflow pipe elbow nut	1	$ .06
3	60144-DX	Injection pump overflow pipe, with nut	1	
4	52128-D	Clip	1	.05
5	60023-DX13½	Fuel injection pump and gear hub (Bosch) (1350 R.P.M.)	1	212.00
		Cap screw, ⅜" N.C. x 1⅜"	1	2.70C
		Cap screw, ⅜" N.C. x 1"	3	2.30C
		Cap screw, ⅜" N.C. x 3"	1	6.50C
		Lock washer, ⅜"	4	.35C
6	50607-DX	Elbow and nut	1	.60
7	37165-D	Nut	1	.17
8	60430-DX	Outlet pipe, with nut	1	.70
9	46250-D	Lock	3	.09
10	46584-DX	Timing indicator, with lock	1	.50
11	50412-D	Pump gear	1	2.75
		Cap screw, ⅜" N.C. x 1"	3	2.30C
12	46583-D	Gasket	1	.05
13	54290-D	Hex. nut	1	.10
14	8000-D	Gear hub	1	2.75
15	38026-DMX	*Connector and nut*	1	.35
16	60143-DAX	Pipe, with nut—Inlet	1	
17	37165-D	Nut	1	.17
18	50607-DX	Elbow and nut	1	.60
19	63647-DX	Pipe, with nut	1	
	30402-DX	Injection pump overflow pipe elbow with nut	1	.30
20	37323-DX	Fuel filter outlet elbow with nut (filter end)	1	.30
21	37323-D	Fuel filter outlet elbow (filter end)	1	.30
22	37165-D	Fuel filter outlet pipe nut (filter end)	1	.17
23	37323-DX	Fuel filter inlet pipe elbow with nut (filter end)	1	.30
25	37165-D	Fuel filter inlet pipe nut (filter end)	1	.17
26	50607-D	Fuel filter outlet pipe elbow (pump end)	1	.60
27	38026-DM	Primary pump inlet pipe connector	1	.22
28	38026-DM	Fuel filter inlet pipe connector	1	.22
29	37165-D	Injection pump return tube coupling nut	1	.17
30	39584-DX	Injection pump return tube connector with nut	1	.35
		Fuel filter inlet pipe elbow (filter end) ¼" standard street elbow	1	.18
		Slotted pipe plug, ⅛" (in fuel filter base)	1	.10
		Fuel filter inlet pipe tee, ¼" (standard tee)	1	.14
		Fuel filter inlet pipe nipple, ¼" x 3½" long	1	6.60C

When ordering, always use I H C Part Nos.

FUEL OIL FILTER WITH BOSCH PUMP

Prior to Grader Serial M3465

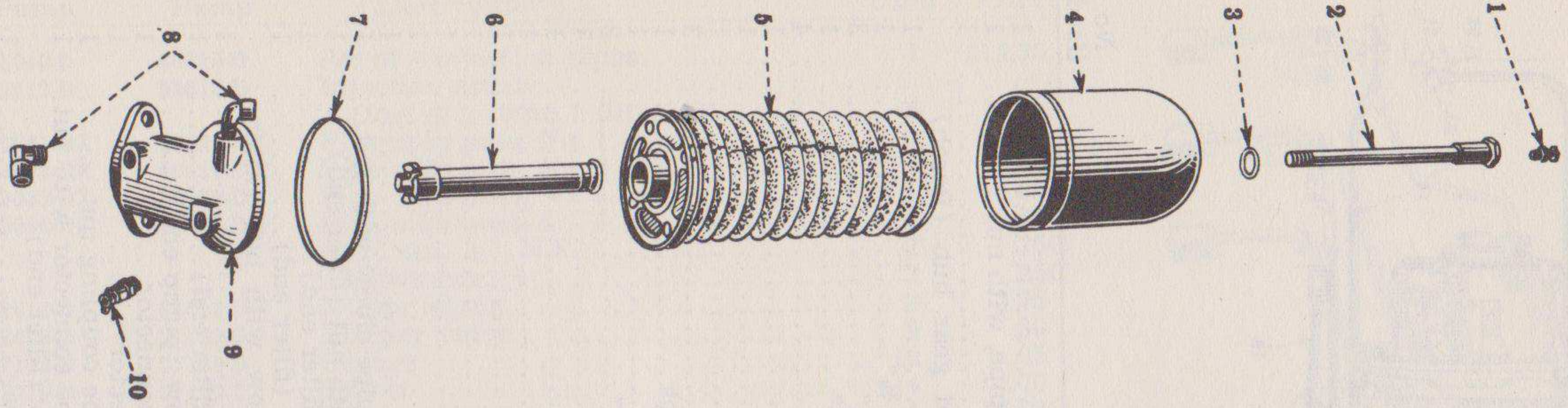

Item No.	I H C Part No.	Description	No. Used	Price
1	39677-D	Bleeder	1	$ .25
2	39577-DA	Stud	1	1.35
3	13839-D	Stud gasket	1	.05
4	28772-D	Case	1	3.85
5	29501-DA	Cloth element	1	6.00
6	28809-D	Metal element	1	4.50
7	13841-DA	Gasket	1	.17
8	37323-DX	Elbow	1	.30
9	8045-D	Base	1	3.30
		Cap screw, $\frac{7}{16}$" N.C. x 1¼"	2	3.50C
		Lock washer, $\frac{7}{16}$"	2	.40C
10	9982-T	Drain cock	1	.60

When ordering, always use I H C Part Nos.

AUXILIARY AND FINAL FUEL FILTER

Used with IHC Injection Pump

On Grader Serial M3465 and up

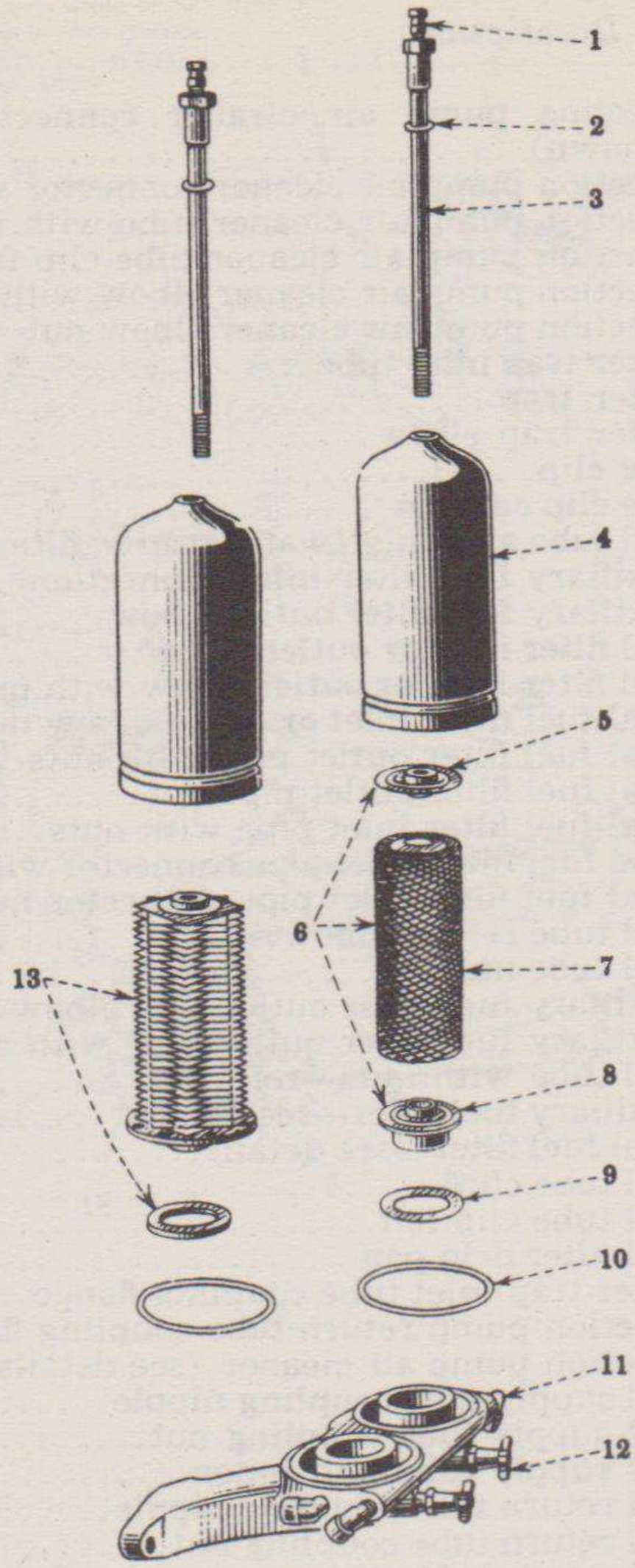

Item No.	IHC Part No.	Description	No. Used	Price
1	39677-D	Fuel filter bleeder	2	$ .25
2	13727-D	Fuel filter case stud gasket	2	.02
3	46591-DA	Fuel filter case stud	2	.95
4	13729-D	Fuel filter case	2	1.90
5	62948-D	Auxiliary fuel filter top plate	1	1.10
6	62945-DA	Auxiliary fuel filter element with plates	1	3.35
7	62946-DA	Auxiliary fuel filter element	1	1.40
8	64520-DA	Auxiliary fuel filter bottom plate	1	.85
9	64521-D	Auxiliary fuel filter bottom plate gasket	1	.05
10	13728-D	Fuel filter case gasket	2	.12
11	9313-D	Fuel filter base	1	7.45
		Cap screws, 7/16" N.C. x 1¼"	2	3.50C
		Lock washers, 7/16"	2	.40C
12	9982-T	Fuel filter drain cock	2	.60
13	62949-D	Final fuel filter element	1	4.50

When ordering, always use I H C Part Nos.

990620 O—52——22

FUEL SYSTEM — IHC

On Grader Serial M3465 and up
Government Registration No. W810086

Item No.	IHC Part No.	Description	No. Used	Price
1	38026-DM	Injection pump air cleaner connector (not shown)	1	$ .22
	38026-DMX	Injection pump air cleaner connector with nut	1	.35
2	65953-DX	Injection pump air cleaner tube with nuts	1	
	29538-D	Injection pump air cleaner tube clip front	1	.05
3	37323-DX	Injection pump air cleaner elbow with nut	1	.30
4	37165-D	Injection pump air cleaner elbow nut	1	.17
5	67460-DMX	Water trap inlet tube	1	.80
6	60870-D	Water trap	1	5.50
7	22510-D	Water trap elbow	1	.55
	16518-D	Pipe clip	1	.12
	16445-D	Pipe clip cushion	1	.02
10	63037-DAX	Fuel tube and nuts (water trap to filter)	1	.85
11	22507-D	Auxiliary fuel filter inlet connection	1	.17
11A	22510-D	Auxiliary fuel filter outlet elbow	1	.55
	37323-DX	Fuel filter inlet or outlet elbow	2	.30
12	37323-DX	Fuel filter inlet or outlet elbow with nut	2	.30
	37165-D	Final fuel filter inlet or outlet elbow nut	2	.17
13	63049-DX	Final fuel filter outlet pipe with nuts	1	.65
14	37165-D	Final fuel filter outlet pipe nut	2	.17
15	63047-DAX	Final fuel filter inlet pipe with nuts	1	.65
16	38026-DMX	Final fuel filter inlet pipe connector with nut	1	.35
	37165-D	Final fuel filter inlet pipe connector nut	1	.17
17	37323-DX	Fuel tube return elbow	1	.30
	37165-D	Fuel tube nut	1	.17
18	22510-D	Auxiliary fuel filter outlet pipe elbow	1	.55
19	63045-DAX	Auxiliary fuel filter outlet pipe with nuts	1	.70
20	67459-DMX	Fuel tube with nuts—return	1	.75
25		Auxiliary fuel filter—see details	1	
26		Final fuel filter—see details	1	
	52969-D	Fuel tube clip	1	
	26242-D	Fuel tube clip felt	1	.03
	64964-D	Fuel filter drip pan	1	.35
	9625-DM	Water trap inlet tube coupling flange	1	.37
	9625-DM	Injection pump return tube coupling flange	1	.37
	64643-D	Injection pump air cleaner (see details)	1	2.35
	22509-D	Fuel supply tube coupling nipple	2	.10
	22508-D	Fuel supply tube coupling nut	2	.10
	22507-D	Fuel supply tube half union	2	.17
	22509-D	Fuel return tube coupling nipple	2	.10
	22508-D	Fuel return tube coupling nut	2	.10
	22507-D	Fuel return half union	2	.17
	46250-D	Timing indicator lock	1	.09
	46584-DX	Timing indicator	1	.50
	50412-D	Pump gear	1	2.75
		Cap screws, 3/8" N. C. x 1"	3	2.30C
	62939-D	Fuel injection pump gasket	1	.12
	65314-D1	Fuel injection pump (IHC) (1350 RPM)	1	212.00
		Cap screw, 3/8" N. C. x 1 1/2"	1	2.70C
		Cap screw, 3/8" N. C. x 5/8"	1	2.00C
		Cap screws, 3/8" N. C. x 2 1/2"	2	3.90C
		Cap screw, 3/8" N. C. x 3"	1	4.70C
		Lock washers, 3/8"	2	.35C

When ordering, always use I H C Part Nos.

FUEL SYSTEM

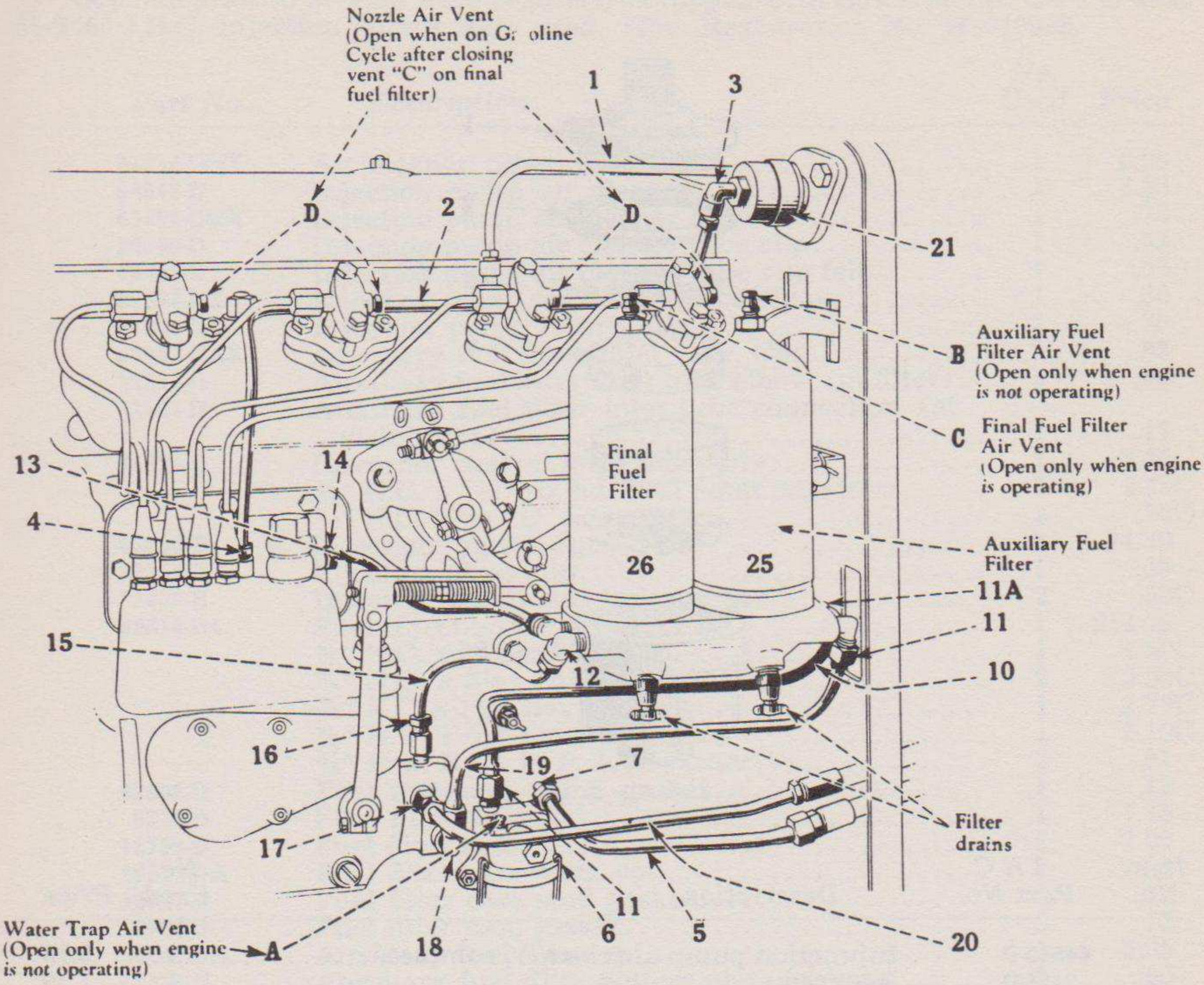

When ordering, always use I H C Part Nos.

INJECTION PUMP AIR CLEANER

On Grader Serial M3465 and up only

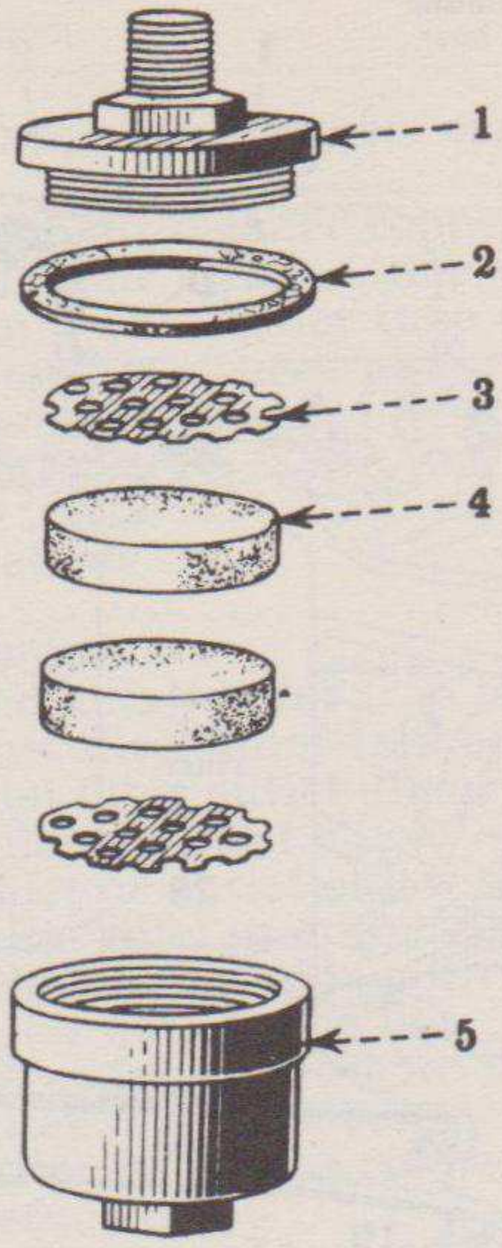

Item No.	*I H C Part No.*	*Description*	*No. Used*	*Price*
	64643-D	Injunction pump air cleaner, complete.....	1	2.35
1	**9454-D**	Body cap.....	1	1.10
2	**64576-D**	Body gasket.....	1	.03
3	**64578-D**	Filter element retainer.....	1	.07
4	**64577-D**	Filter element	1	.05
5	**9453-D**	Body	1	1.00
	16445-D	Injection pump air cleaner tube clip felt.....	1	.02
	37323-DX	Injection pump air cleaner elbow.....	1	.30
	65505-DMX	Injection pump air cleaner tube.....	1	.75
	29538-D	Injection pump air cleaner tube clip.....	1	.05

When ordering, always use I H C Part Nos.

PARTS LIST

The following parts listed constitute a complete package of parts necessary to change a UD-14 engine from Bosch to I.H.C. Injection Pump.

Graders prior to M-3465 were regularly equipped with Bosch pump. On and after M-3465 I.H.C. Injection pumps were used. Gov. Registration No. W-810086.

Part No.	*Description*	*No. Used*	*Price*
61014-DMX	Air cleaner pipe	1	5.25
64643-D	Injection pump air cleaner	1	2.35
65505-DMX	Injection pump air cleaner tube	1	.75
29538-D	Injection pump air cleaner tube clip	1	.05
16445-D	Injection pump air cleaner tube clip felt	1	.02
37323-DX	Injection pump air cleaner tube elbow	1	.30
37323-DX	Injection pump return elbow	1	.30
63037-DAX	Auxiliary fuel filter inlet tube, Cpt.	1	.85
22510-D	Auxiliary fuel filter inlet tube elbow (at filter)	1	.55
22507-D	Auxiliary fuel filter inlet tube connection (at water trap)	1	.17
62474-D	Governor control lever assembly	1	3.85
	¼" N.C. x 1¼" sq. hd. oval point set screw	2	2.25C
	¼" N.C. type "D" hex. nut	2	.70C
63040-D	Injection pipes—cpt.	1	14.30
63035-D	Injection pipes clip	1	.09
21336-H	Injection pump bolt lock washer	2	.50C
65314-D1	Fuel injection pump	1	212.00
	⅜" N.C. x 3" hex. hd. bolt	1	6.50C
	⅜" N.C. x 2½" hex. hd. bolt	2	3.90C
	⅜" N.C. x 1½" hex. hd. bolt	1	2.70C
	⅜" N.C. x ¾" hex. hd. bolt	1	2.10C
	⅜" Reg. N. T. P. P. lockwasher	2	.01
62939-D	Fuel injection pump gasket	1	.12
9313-D	Fuel filter base	1	7.45
13729-D	Fuel filter case	2	1.90
46591-DA	Fuel filter case stud, cpt.	2	.95
13727-D	Fuel filter case stud gasket	2	.02
13728-D	Fuel filter case gasket	2	.12
62945-DA	Auxiliary fuel filter, cpt.	1	3.35
64521-D	Auxiliary fuel filter bottom plate gasket	1	.05
39677-D	Fuel filter bleeder	2	.25
62949-D	Final fuel filter element	1	4.50
9982-T	Fuel filter drain cock	2	.60
64964-D	Fuel filter drip pan	1	.35
63045-DAX	Auxiliary fuel filter outlet pipe, cpt.	1	.70
22510-D	Auxiliary fuel filter outlet pipe, elbow	2	.55
63047-DAX	Fuel filter inlet pipe, cpt.	1	.65
37323-DX	Fuel filter inlet pipe elbow (in filter)	1	.30
38026-DM	Fuel filter inlet pipe connector (in pump)	1	.22
63049-DAX	Fuel filter outlet pipe, cpt.	1	.65
37323-DX	Fuel filter outlet elbow (in filter)	1	.30
22509-D	Fuel supply tube coupling nipple	2	.10
22508-D	Fuel supply tube coupling nut	2	.10
22507-D	Fuel supply tube half union	2	.17
22509-D	Fuel return tube coupling nipple	2	.10
22508-D	Fuel return tube coupling nut	2	.10
22507-D	Fuel return tube half union	2	.17
52640-D	Governor control rod trunnion assembly	1	.85
19306-D	Governor control rod trunnion pin	1	.02
64996-D	Governor control rod spring	2	.12
67527-DM	Governor control rod assembly front	1	1.15
67528-DMX	Governor control rod, rear, complete	1	.90
67865-DM	Governor control rod assembly	1	2.00
67460-DMX	Fuel supply tube	1	.80
67459-DMX	Fuel return tube	1	.75

GOVERNOR SHAFT UNIT

Unnumbered parts in the illustrations are the same as corresponding parts shown with numbers.

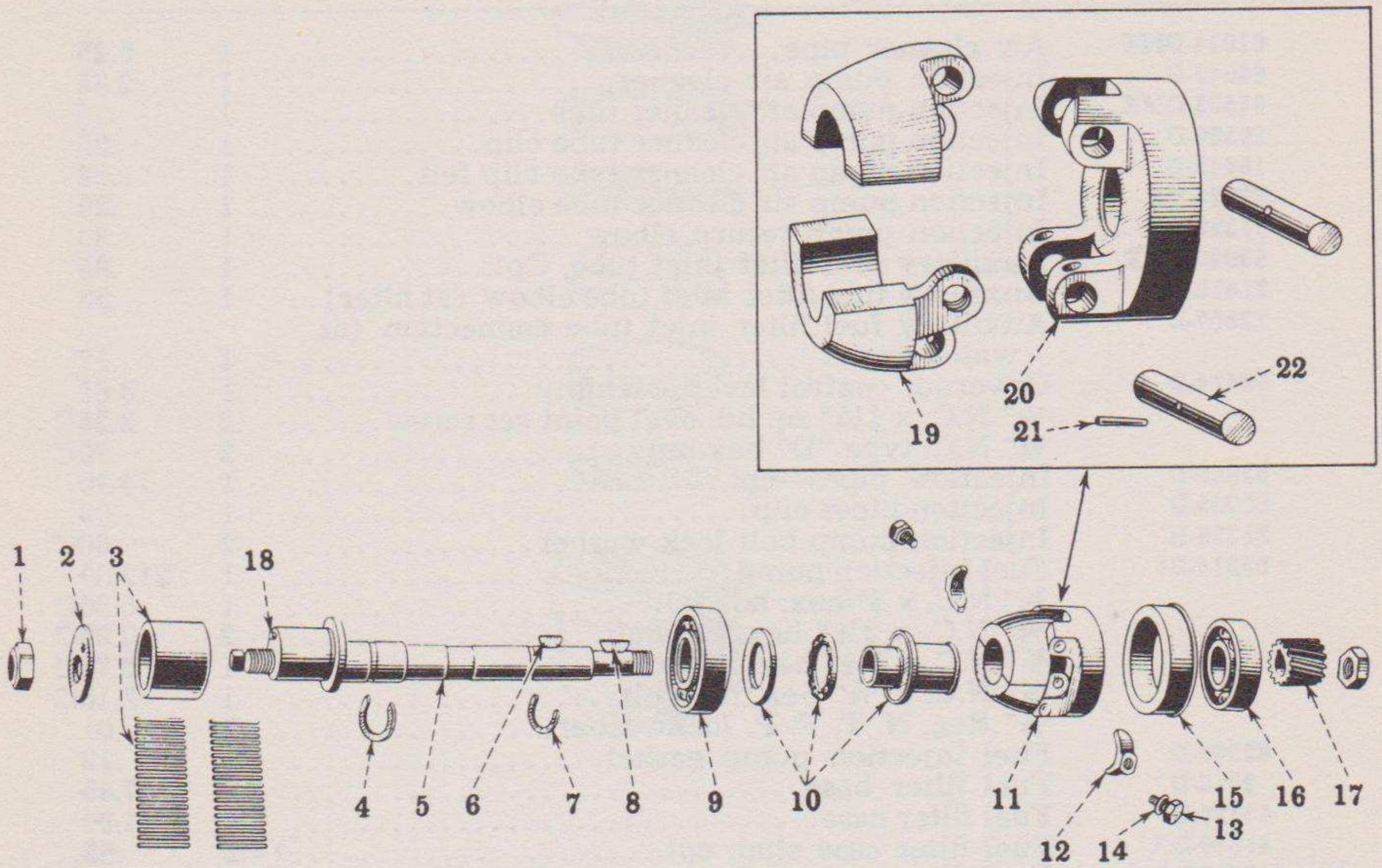

Item No.	*I H C Part No.*	*Description*	*No. Used*	*Price*
1	59682-D	Governor shaft nut	2	.10
2	59684-D	Governor shaft eccentric washer	1	.25
3	59683-D	Governor shaft eccentric bearing	1	1.00
4	59679-D	Governor shaft snap ring, large	1	.03
5	59677-DX	Governor shaft with nut and keys, (see detail list)	1	8.50
6	4167-T	Governor shaft key (Woodruff No. 3 ⅛" x ½")	1	.65C
7	59678-D	Governor shaft snap ring, small	1	.03
8	7699-TM	Governor shaft key (Woodruff No. 5 ⅛" x ⅝")	1	.85C
9	17063-D	Governor shaft large bearing (ND-1304)	1	2.80
10	59693-DX	Governor sleeve with thrust bearing	1	2.25
11	59686-DX	Governor weight assembly (see detail list)	1	11.00
12	59690-D	Governor shaft thrust shoe	2	.90
13	59691-DX	Governor shaft thrust shoe pin with lock washer	2	.20
14	52745-V	Governor shaft shoe pin lock washer (Shakeproof No. 1214)	2	.35C
15	59680-D	Governor shaft bearing cage	1	
16	50941-V	Governor shaft small bearing (ND-3303)	1	2.30
17	59681-D	Governor shaft pinion	1	2.15
18	59685-D	Governor shaft eccentric washer pin	1	.12
19	59686-D	Governor weight	2	
20	59689-D	Governor weight carrier	1	
21	59688-D	Governor weight rivet	2	
22	59687-D	Governor weight pin	2	

When ordering, always use I H C Part Nos.

PARTS LIST

GOVERNOR SPRING, TORQUE CONTROL, PUMP HOUSING COVER AND OIL FILLER

Unnumbered parts in the illustrations are the same as corresponding parts shown with numbers.

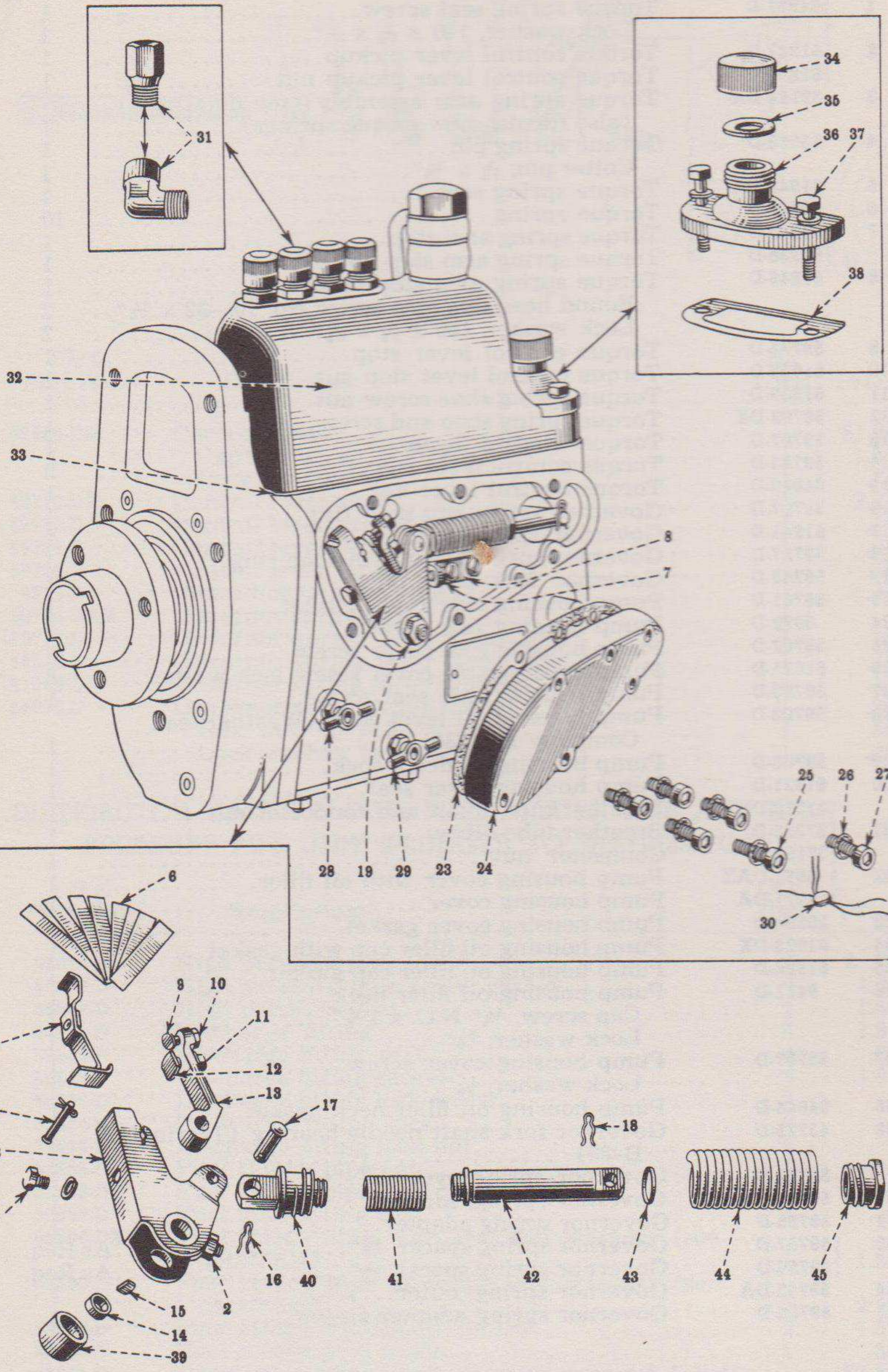

Don't order parts from the illustrations only; refer to the list also.

GOVERNOR SPRING, TORQUE CONTROL, PUMP HOUSING COVER AND OIL FILLER

Item No.	I H C Part No.	Description	No. Used	Price
1	61951-D	Torque spring seat screw	1	.08
		Lock washer, 190 x 1/16 x 3/64"	1	.20C
2	61943-D	Torque control lever pickup	1	.10
	61939-D	Torque control lever pickup nut	1	.15
3	59784-DA	Torque spring arm assembly (see detail list) (also furnish new torque springs)	1	
4	65066-D	Torque spring pin	1	.20
		Cotter pin, 1/16 x 3/8"	1	.10C
5	61948-DX	Torque spring seat	1	
6	59781-D	Torque spring	10	.05
7	61943-D	Torque spring arm stop	1	.10
	61939-D	Torque spring arm stop nut	1	.15
8	61946-D	Torque spring arm stop holder	1	.25
		Round head machine screw No. 10—32 x ½"	2	.40C
		Lock washer, 190 x 1/16 x 3/64"	2	.20C
9	59772-D	Torque control lever stop	1	
10	61939-D	Torque control lever stop nut	1	.15
11	61939-D	Torque spring shoe screw nut	1	.15
12	59782-DX	Torque spring shoe and screw	1	.75
13	59767-D	Torque control lever	1	.85
14	59793-D	Torque control lever spacer	2	.06
15	64060-D	Torque control lever key	1	.12
16	59727-D	Governor spring pin snap ring	1	1.00C
17	61941-D	Governor spring pin	1	.25
18	59727-D	Governor spring lever arm snap ring	1	1.00C
19	59763-D	Governor fork shaft nut	1	.05
23	59701-D	Pump housing side cover gasket	1	.05
24	8972-D	Pump housing side cover	1	.75
25	59702-D	Pump housing side cover screw	5	.10
26	61025-D	Pump housing side cover screw lock washer	6	.50C
27	59703-D	Pump housing side seal screw	1	.10
28	59708-D	Pump housing oil level cock (Weatherhead Company No. 135)	1	.22
29	59708-D	Pump housing oil drain cock	1	.22
30	61921-D	Pump housing cover seal	1	
	37323-DX	Breather tube elbow and connector nut	1	.30
31	37323-D	Breather tube elbow	1	
	37165-D	Connector nut	1	.17
32	8971-DAX	Pump housing cover with oil filler	1	2.75
	8971-DA	Pump housing cover	1	
33	59694-D	Pump housing cover gasket	1	.05
34	61923-DX	Pump housing oil filler cap with gasket	1	.30
35	61924-D	Pump housing oil filler cap gasket	1	1.00C
36	9412-D	Pump housing oil filler neck	1	.75
		Cap screw, ¼" N.C. x 1⅜"	1	2.00C
		Lock washer, ¼"	1	.25C
37	59707-D	Pump housing cover screw	1	.03
		Lock washer, ¼"	1	.25C
38	64044-D	Pump housing oil filler neck gasket	1	.03
39	45775-D	Governor fork shaft needle bearing (Torrington B-88)	1	.40
	59754-D	Governor spring eye	1	.60
41	59753-D	Governor spring, inner	1	.15
42	59755-D	Governor spring adapter	1	.55
43	59757-D	Governor spring spacer, ⅛"	As Req.	.10
	59750-D	Governor spring spacer, 1/16"	As Req.	.25
44	59752-DA	Governor spring, outer	1	.25
45	59756-D	Governor spring adapter sleeve	1	.20

When ordering, always use I H C Part Nos.

CONTROL LEVER UNIT

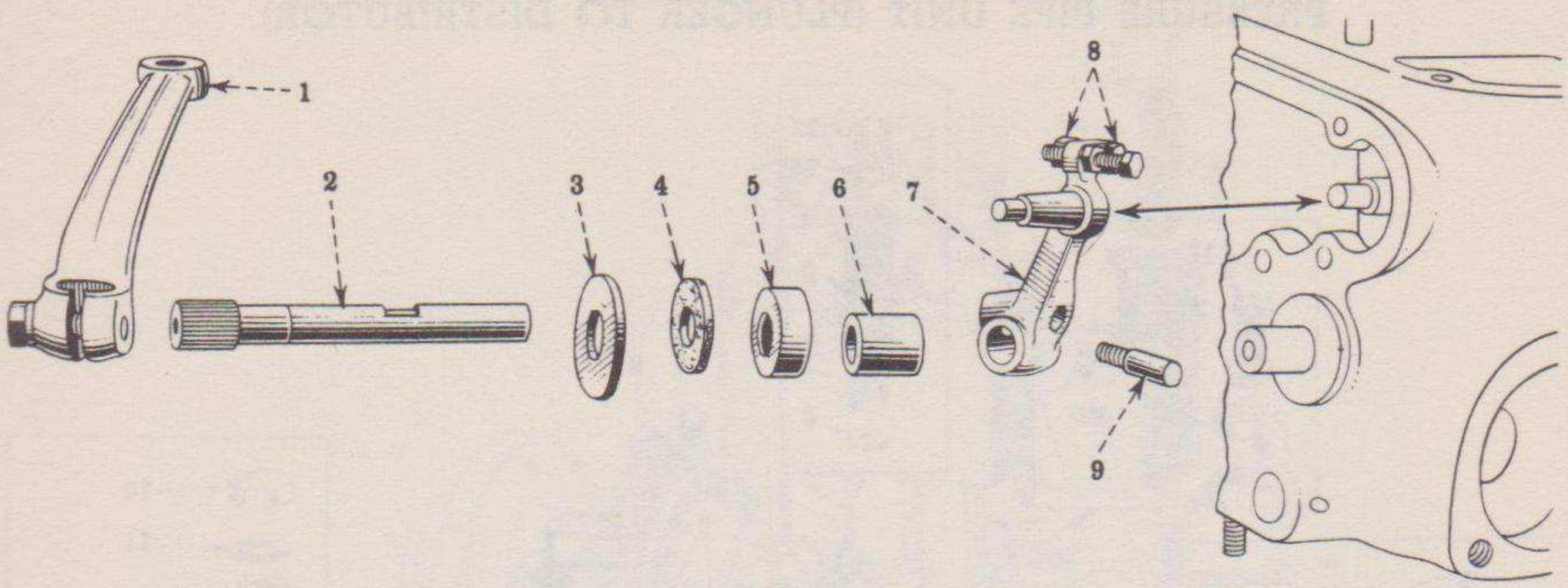

Item No.	*IHC Part No.*	*Description*	*No. Used*	*Price*
1	67864-DM	Control lever	1	$1.85
		Cap screw, ¼" N.F. x ⅞"	1	1.50C
		Lock washer, ¼"	1	.25C
2	59719-DA	Control lever shaft	1	3.45
3	59720-D	Control lever shaft washer	1	.15
4	59721-D	Control lever felt washer	1	.03
5	59722-D	Control lever oil seal	1	.30
6	8976-D	Pump housing bushing	1	.45
7	59724-DAX	Governor spring lever	1	
8	59723-D	Governor spring lever stop—short	1	.15
	64043-D	Governor spring lever stop—long	1	.15
	61939-D	Governor spring lever stop nut	2	.15
9	64070-D	Governor spring lever screw	1	.25
		Hex. nut, ¼" N.F.	1	.50C
		Lock washer, ¼"	1	.25C

DISTRIBUTOR VALVE BLOCK, FUEL RETURN PIPE AND HIGH PRESSURE PIPE UNIT (PLUNGER TO DISTRIBUTOR)

Item No.	*IHC Part No.*	*Description*	*No. Used*	*Price*
1	66010-D	High pressure pipe screw	2	$ .25
2	59649-D	High pressure pipe screw gasket	4	1.00C
3	59647-D	High pressure pipe	1	1.65
4	64676-D	Discharge fitting	4	1.80
5	59618-D	Discharge fitting seal	4	.05
6	59613-D	Discharge fitting gasket	4	1.00C
7	59616-D	Discharge fitting lock screw	2	
8	59614-DA	Discharge fitting lock	2	
9	59615-DA	Discharge fitting lock nut	2	
10	59659-D	Fuel return pipe cap	1	.55
11	59658-D	Fuel return pipe large washer	3	.05
12	59667-D	Fuel inlet fitting seal	1	.05
13	59666-DX	Fuel inlet fitting with seal and washers (see detail list)	1	1.25
14	59653-D	Fuel return pipe assembly and washers (see detail list)	1	2.50
15	59657-D	Fuel return pipe small washer	2	1.50C
16	59660-D	Fuel return pipe screw	1	.30
17	66012-D	Distributor valve block assembly (see detail list)	1	57.50
18	59609-D	Distributor valve upper block dowel (Not for service—order 66012-D)	2	

DISTRIBUTOR VALVE BLOCK, FUEL RETURN PIPE AND HIGH PRESSURE PIPE UNIT (PLUNGER TO DISTRIBUTOR)

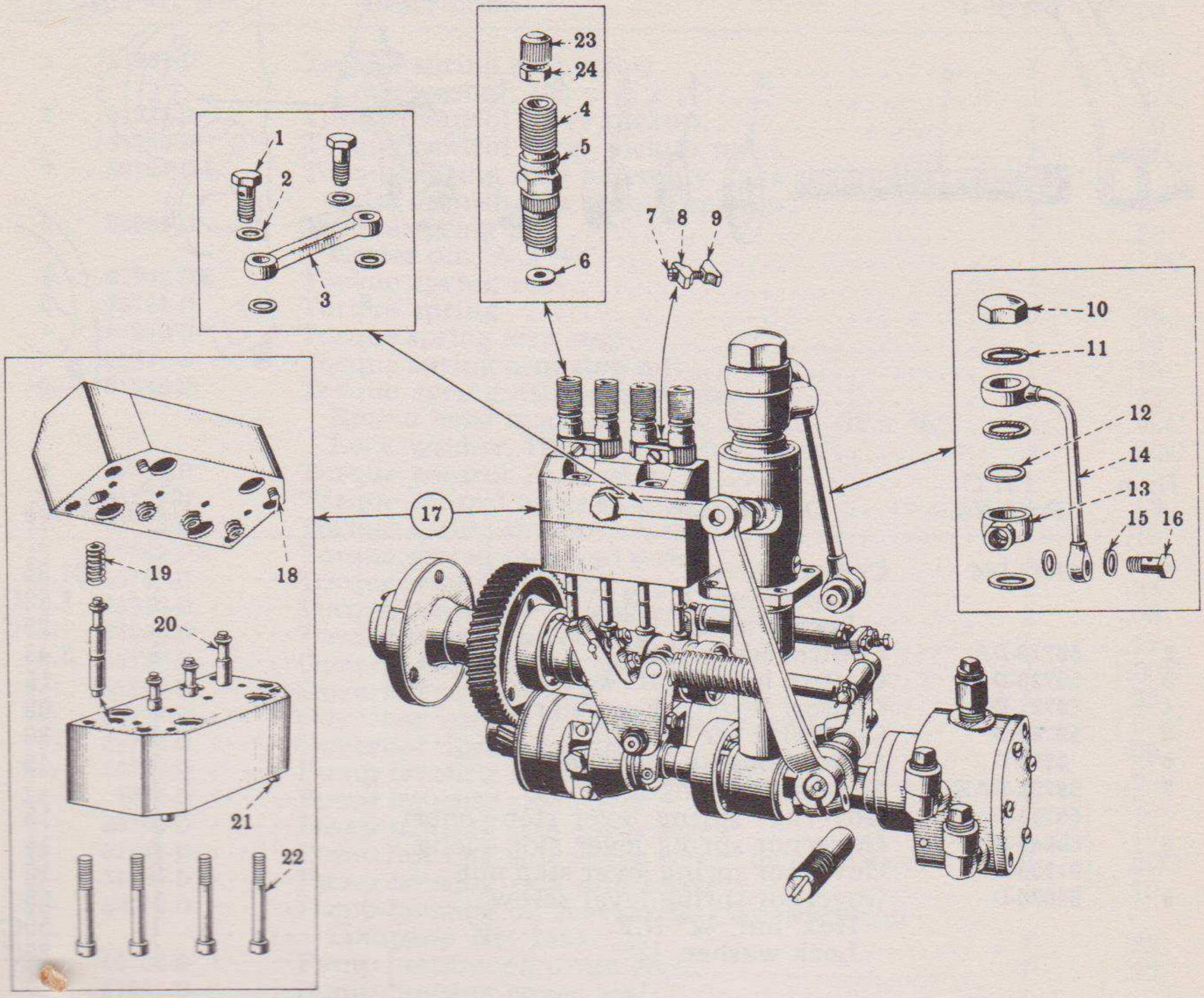

Item No.	*I H C Part No.*	*Description*	*No. Used*	*Price*
19	59603-D	Distributor valve spring	4	.30
20	59602-D	Distributor valve (Not for service—order 66012-D)	4	
21	59606-D	Distributor valve lower block dowel	2	.05
22	59608-D	Valve block clamp screw	4	.08
23	65355-D	Discharge cap (to close discharge openings when fuel lines are disconnected)	4	
24	59617-D	Discharge fitting clamp nut	4	.12

Unnumbered parts in the illustrations are the same as corresponding parts shown with numbers.

Don't order parts from the illustrations only; refer to the list also.

CAMSHAFT

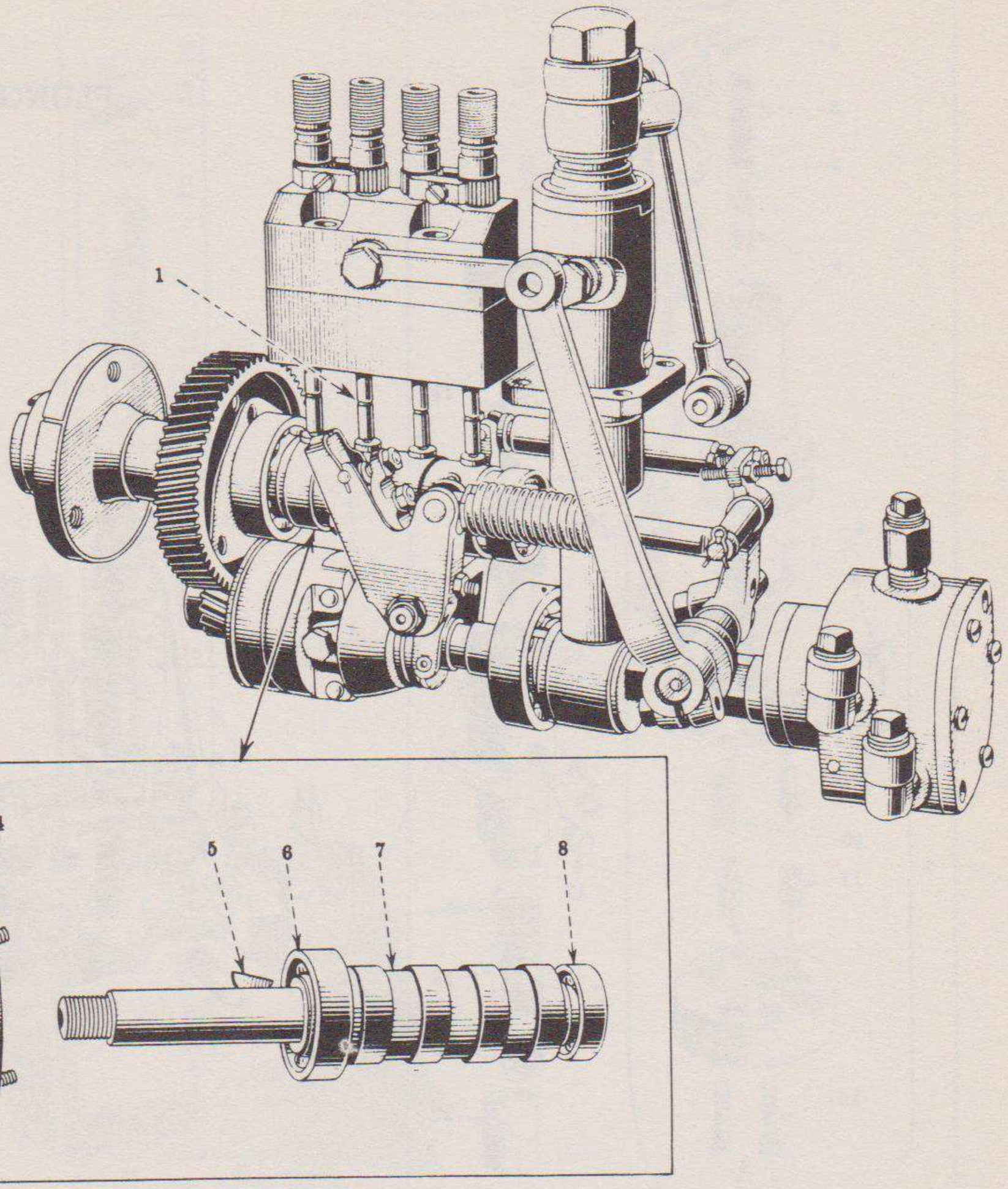

Item No.	*I H C Part No.*	*Description*	*No. Used*	*Price*
1	59604-D	Distributor valve tappet	4	$ .75
2	59674-D	Camshaft gear	1	4.90
3	20000-D	Camshaft bearing retainer screw	3	.05
		Lockwire, 8" long x .0625" (bundling wire)	1	
4	59673-D	Camshaft bearing retainer	1	.05
5	7699-TM	Camshaft key (Woodruff No. 5—⅛" x ⅝")	2	.85C
6	8522-T	Camshaft bearing, large (ND-3204)	1	2.05
7	59670-D	Camshaft	1	11.25
8	1265-C	Camshaft bearing, small (ND-3202)	1	1.50

Unnumbered parts in the illustrations are the same as corresponding parts shown with numbers.

When ordering, always use I H C Part Nos.

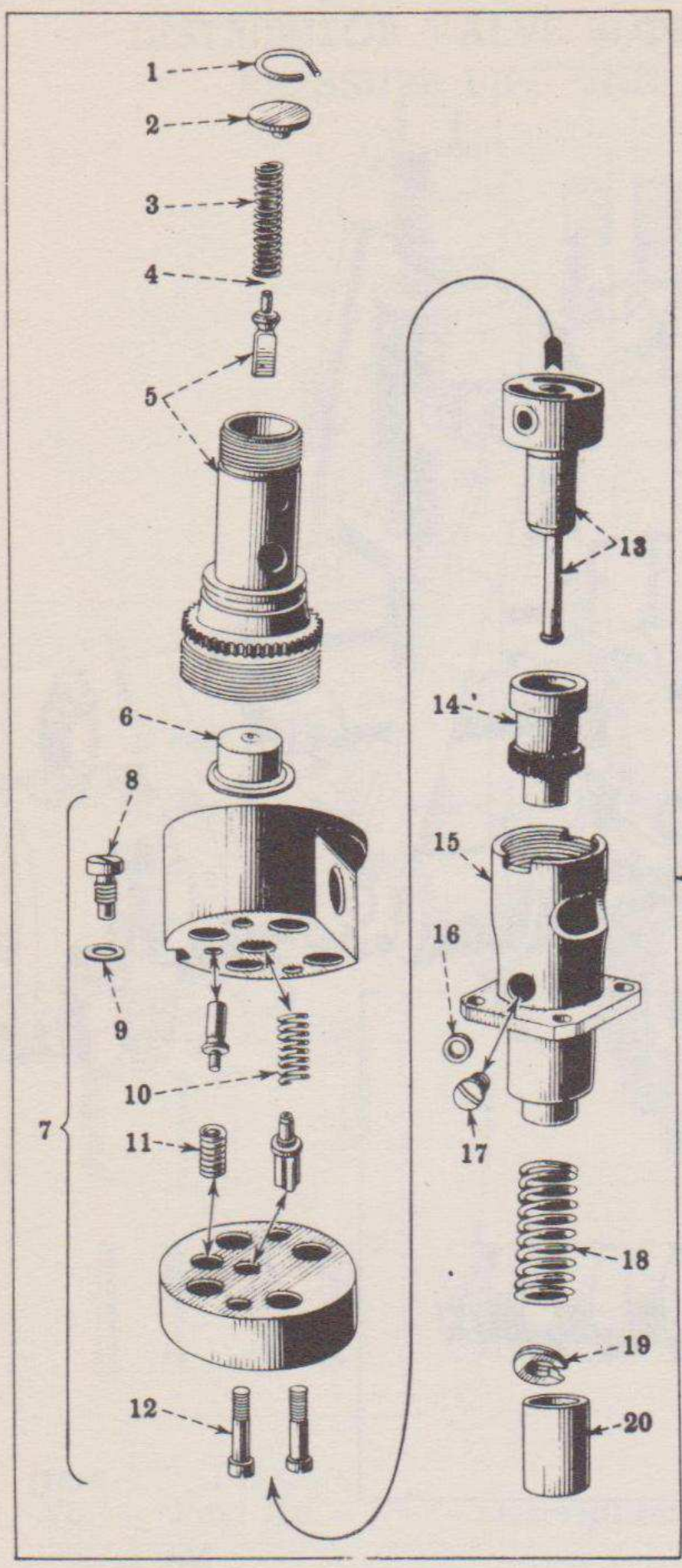

PLUNGER

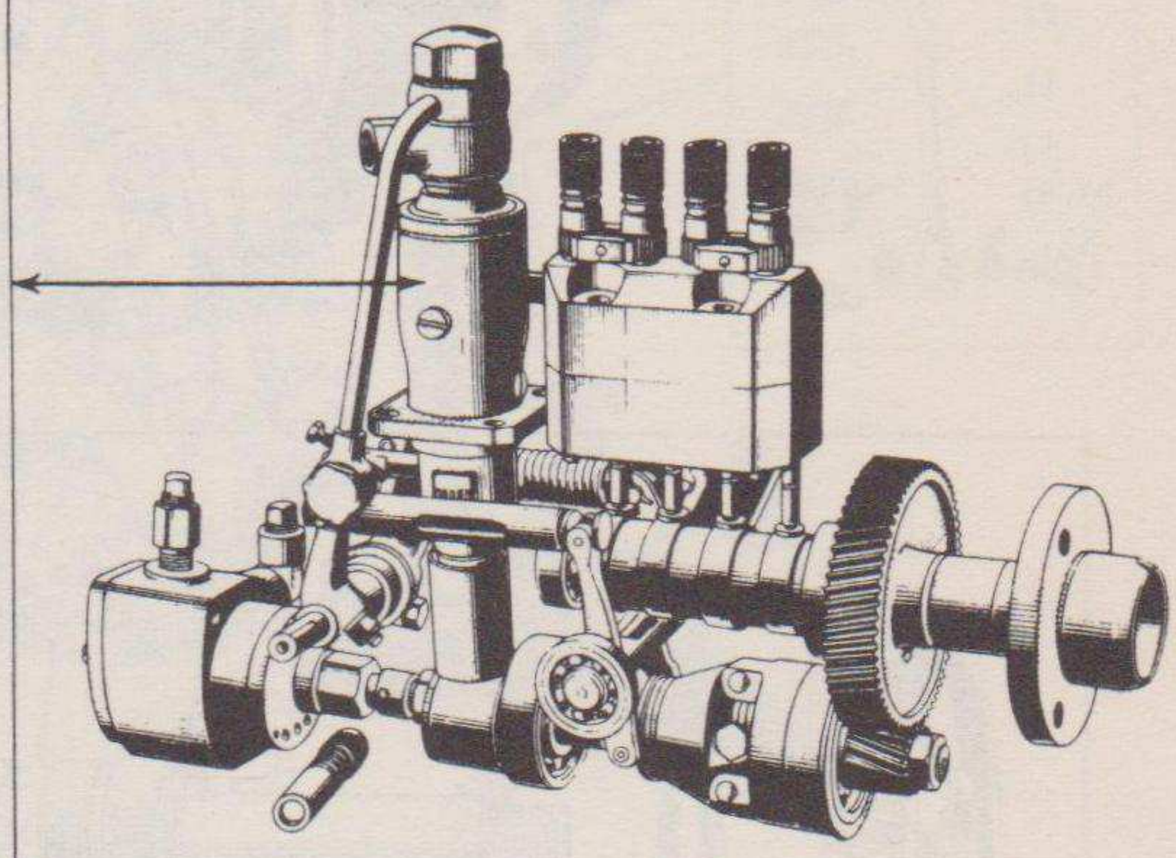

	66111-D	Plunger unit assembly (see detail list)	1	50.00
1	59665-D	Fuel return check spring lock	1	1.00C
2	59664-D	Fuel return check spring seat	1	.25
3	59663-D	Fuel return check spring	1	.17
	64679-D	Plunger bushing clamp lock	1	
5	61926-DAX	Plunger bushing clamp with fuel return check (see detail list)	1	
6	59650-DA	Fuel filter element	1	.75
7	66392-D	Check and reverse valve block (see detail list)	1	10.00
8	59645-D	Reverse check valve screw	1	.15
9	59646-D	Reverse check valve screw washer	1	1.00C
10	59638-D	Check valve spring	1	.12
11	59642-D	Reverse check valve spring	1	.12
12	59640-D	Check valve block clamp screw	2	.10
13	59619-DX	Plunger and bushing (see detail list)	1	19.00
14	59631-D	Plunger control gear	1	3.00
15	59625-D	Plunger bushing retainer	1	4.25
16	59624-D	Plunger bushing screw gasket	2	1.00C
17	59623-D	Plunger bushing screw	2	.08
18	59633-D	Plunger spring	1	.35
19	59634-D	Plunger spring seat	1	.35
20	59635-D	Plunger tappet	1	3.50
	59652-D	Plunger bushing clamp seal	1	.05
	59644-DA	Reverse check valve stop	1	.20

SCAVENGING VALVE, CONTROL RACK AND PUMP FLANGE

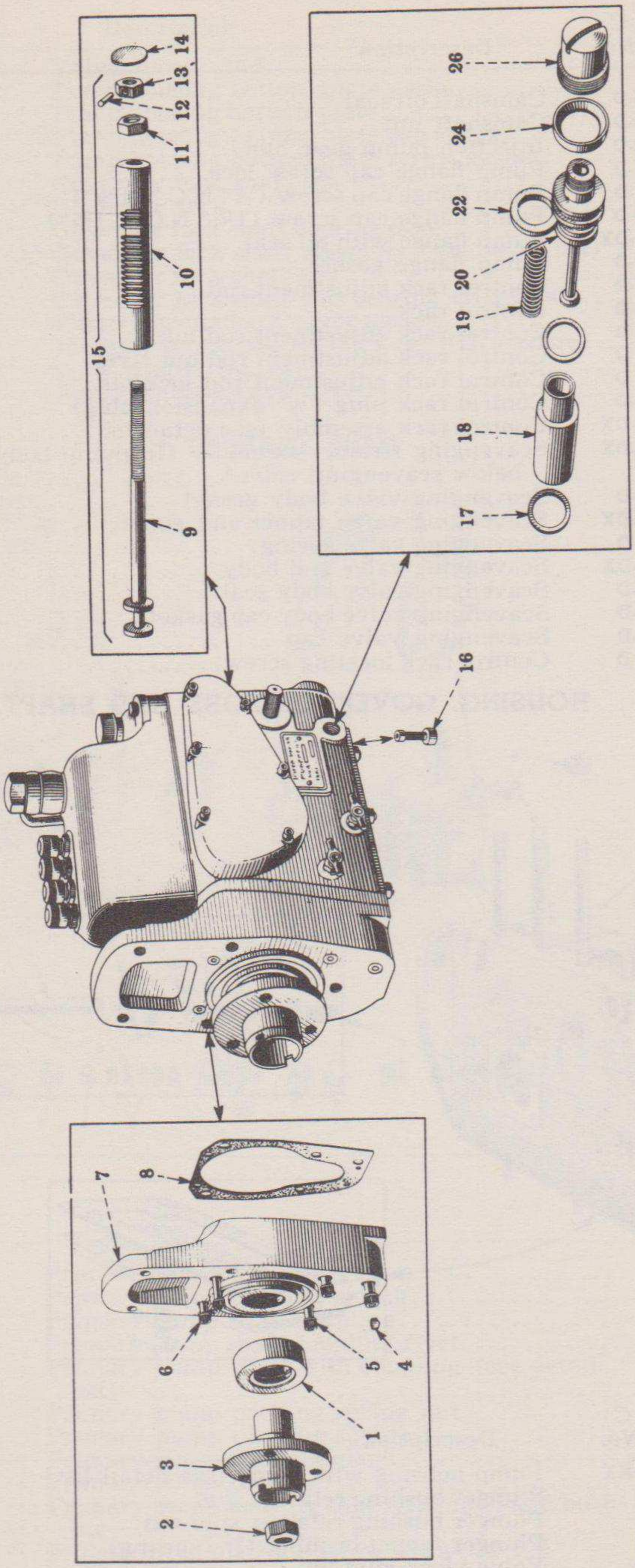

SCAVENGING VALVE, CONTROL RACK AND PUMP FLANGE

Item No.	IHC Part No.	Description	No. Used	Price
1	59675-D	Camshaft oil seal	1	$ .85
2	58676-D	Camshaft nut	1	.15
3	62943-D	Injection pump gear hub	1	4.50
4	59712-D	Pump flange cap screw lock	5	.04
5	59711-D	Pump flange cap screw (5/16" N.C. x 1¾")	3	.12
6	59710-D	Pump flange cap screw (1¼" N.C. x 1¾")	2	.12
7	8973-DX	Pump flange with oil seal	1	4.25
8	59709-D	Pump flange gasket	1	.05
9	59715-D	Control rack adjustment rod	1	
10	59713-D	Control rack	1	
11	59716-D	Control rack adjustment rod nut	1	
12	59688-D	Control rack adjustment rod nut rivet	1	
13	59717-D	Control rack adjustment rod lock nut	1	
14	13090-D	Control rack plug (⅞" expansion plug)	1	3.30C
15	59713-DX	Control rack assembly (see detail list)	1	4.25
16	63427-DX	Scavenging strainer assembly (In pump body below scavenging valve)	1	.75
17	61932-D	Scavenging valve body gasket	3	1.00C
18	61933-DX	Scavenging valve tappet and guide	1	1.75
19	61929-D	Scavenging valve spring	1	.08
20	61928-DX	Scavenging valve and body	1	5.50
22	65029-D	Scavenging valve body seal	1	.05
24	65028-D	Scavenging valve body cap gasket	1	.15
26	65027-D	Scavenging valve cap	1	.35
	59714-D	Control rack locating screw	1	.03

HOUSING, GOVERNOR FORK AND SHAFT

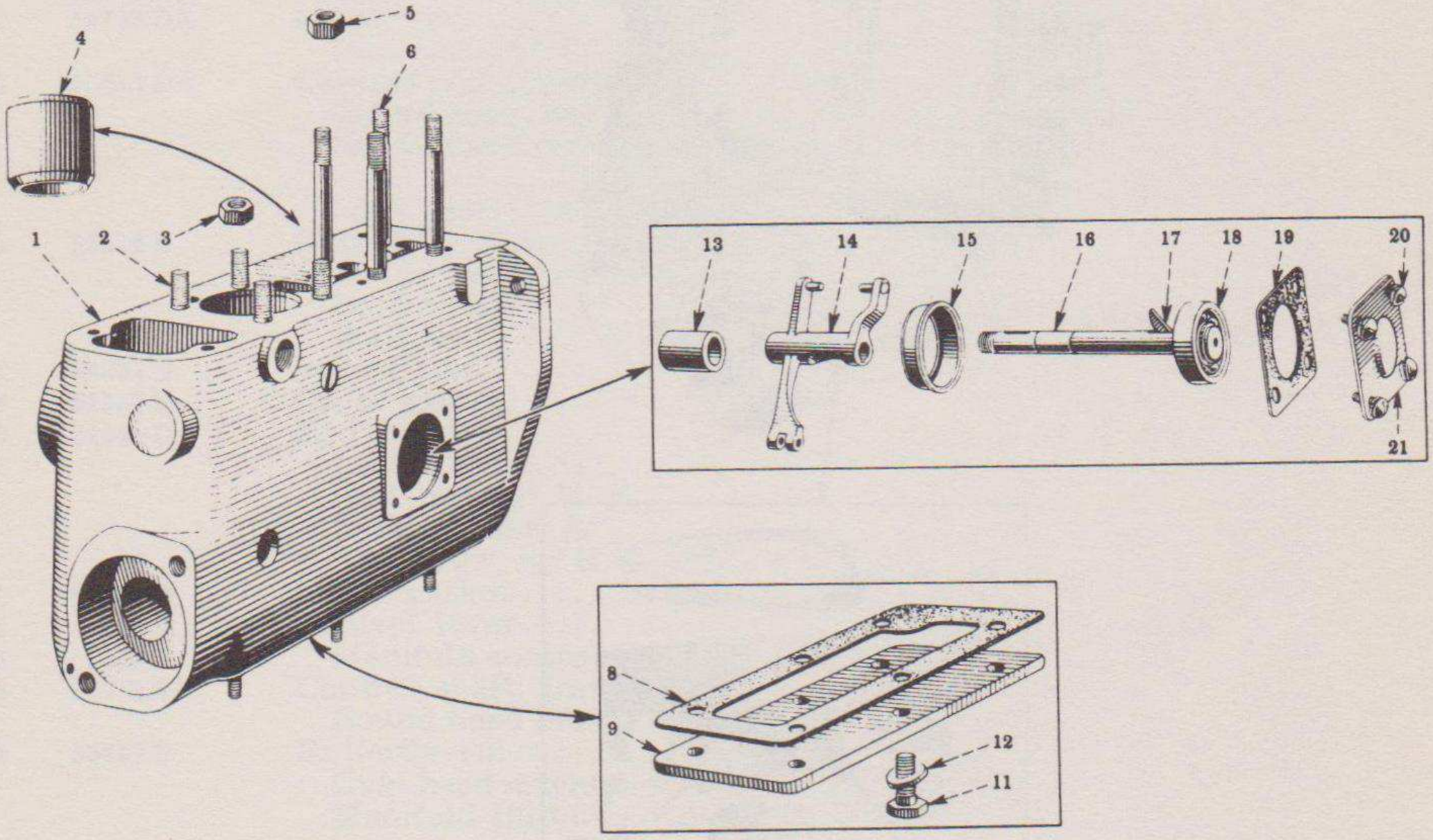

Item No.	IHC Part No.	Description	No. Used	Price
1	8970-DAX	Pump housing with studs (see detail list)	1	$36.70
2	59627-D	Plunger bushing retainer stud	4	.12
3	59611-D	Plunger bushing retainer stud nut	4	.03
4	59636-D	Plunger tappet bushing (In housing)	1	.20
5	59611-D	Valve block stud nut	4	.03

HOUSING, GOVERNOR FORK AND SHAFT

Item No.	IHC Part No.	Description	No. Used	Price
6	59610-D	Valve block stud	4	.20
8	59705-D	Pump housing bottom plate gasket	1	.05
9	59704-D	Pump housing bottom plate	1	.20
11	65056-D	Pump housing bottom plate cap screw	6	1.50C
12	25176-D	Pump housing bottom plate screw gasket	6	.02
13	61940-D	Governor fork shaft spacer	1	.85
14	59760-DX	Governor fork	1	2.85
15	61942-D	Governor fork shaft bearing cage	1	.60
16	59762-DX	Governor fork shaft assembly (see detail list)	1	2.00
17	59734-D	Governor fork shaft key	1	.07
18	1100-C	Governor fork shaft ball bearing (ND-3200)	1	1.35
19	59698-D	Pump housing back cover gasket	1	.03
		Machine screw No. 10—32 x 3/8" (Granodize)	4	.50C
20		Lock washer No. 10	4	.20C
21	59697-D	Pump housing back cover	1	.10

PRIMARY PUMP

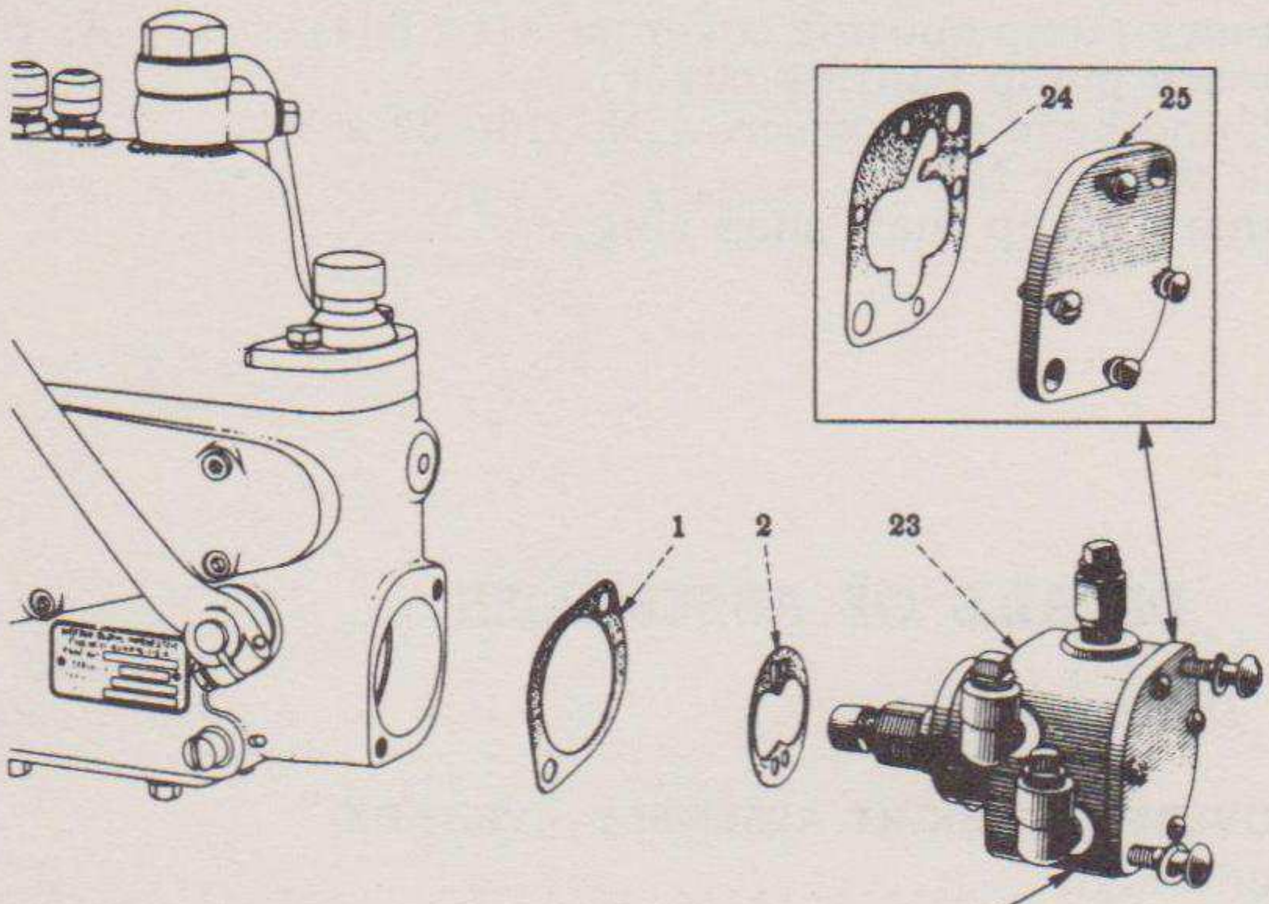

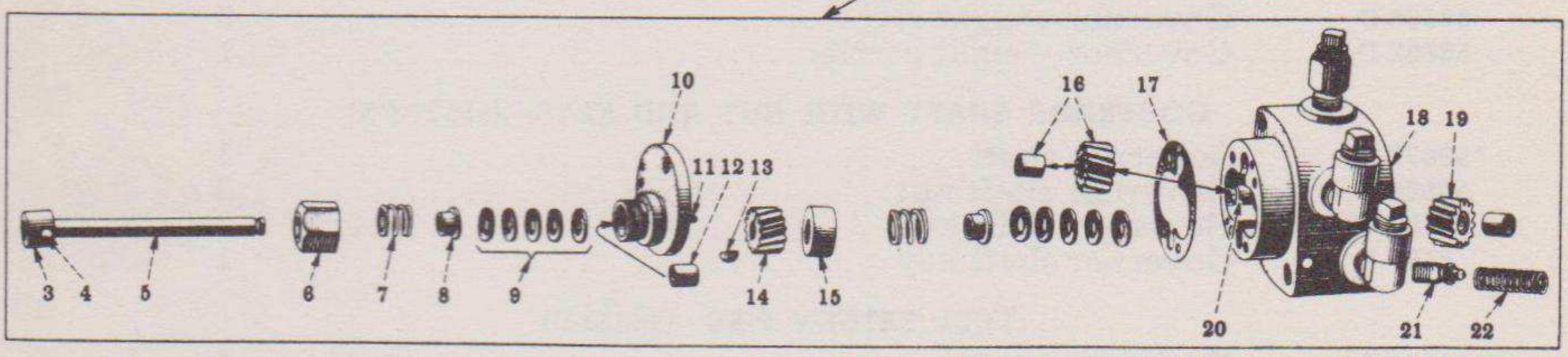

Item No.	IHC Part No.	Description	No. Used	Price
1	59729-D	Primary pump housing gasket	1	$ .05
2	59746-DA	Primary pump packing spring	2	.08
3	59736-D	Primary pump shaft coupling	1	.30
4	61927-D	Primary pump shaft coupling rivet	1	.50C
5	59733-DAX	Primary pump shaft with coupling (see detail list)	1	5.25
6	59740-D	Primary pump packing spring nut	1	.20
7	59739-D	Primary pump packing spring	2	.08
8	59738-D	Primary pump packing gland	2	.15
9	59737-D	Primary pump packing	2	.35
10	59745-DX	Primary pump bearing cage with dowl and bushing	1	1.75
		Fillister head machine screw No. 8—32 x 3/8" (Granodize)	3	.36C

PRIMARY PUMP

Item No.	IHC Part No.	Description	No. Used	Price
11	59609-D	Primary pump bearing cage dowl	2	.05
12	59730-D	Primary pump bushing	4	.08
13	64060-D	Primary pump shaft key	2	.12
14	59743-D	Primary pump scavenging gear	1	1.40
15	59750-D	Primary pump packing retainer	1	.25
16	59742-DX	Primary pump idler gear with bushing	2	1.40
17	59744-D	Primary pump scavenging gear gasket (.006)	As req.	.03
	64871-D	Primary pump scavenging gear gasket (.004)	As req.	.03
18	8974-DX	Primary pump housing assembly (see detail list)	1	18.50
19	59741-DA	Primary pump pressure gear	1	
20	59751-D	Primary pump idler gear shaft	1	.45
21	59747-D	Primary pump by-pass valve (not for service—order 8974-DX)	1	
22	59749-D	Primary pump by-pass valve spring	1	.08
23	66108-D	Primary pump unit, complete	1	25.00
		$\frac{5}{16}$" N.C. x 2½" Rd. Hd. slotted screws	2	6.60C
		$\frac{5}{16}$" Reg. NTPP lock washers	2	.35C
24	59732-D	Primary pump housing cover gasket (.006)	As req.	.03
	64870-D	Primary pump housing cover gasket (.004)	As req.	.03
25	59731-D	Primary pump housing cover	1	.90
		Round head slotted screw No. 10—32 x ⅜"	4	.38C
		Lock washer No. 10	4	.20C
	65210-D	Primary pump shaft snap ring	1	.03

DETAILS OF ASSEMBLIES

Item No.	IHC Part No.	Description	No. Used
		GOVERNOR WEIGHT ASSEMBLY—(59686-DX)	
	59686-D	Governor weight	2
	59687-D	Governor weight pin	2
	58688-D	Governor weight rivet	2
	59689-D	Governor weight carrier	1
		GOVERNOR SHAFT WITH NUT AND KEYS—(59677-DX)	
	*59677-D	Governor shaft	1
	59682-D	Governor shaft nut	2
	7699-TM	Governor shaft key	1
	4167-T	Governor shaft key	1
		FUEL RETURN PIPE—(59653-D)	
	*59654-D	Fuel return pipe	1
	*59655-D	Fuel return fitting, small	1
	*59656-D	Fuel return fitting, large	1
	59657-D	Fuel return pipe washer, small	2
	59658-D	Fuel return pipe washer, large	2
	59667-D	Fuel inlet fitting seal	1
	59658-D	Fuel inlet fitting seal washer	1
		FUEL INLET FITTING WITH SEAL AND WASHER—(59666-DX)	
	*59666-D	Fuel inlet fitting	1
	59667-D	Fuel inlet fitting seal	1
	59658-D	Fuel inlet fitting seal washer	1
		PRIMARY PUMP SHAFT ASSEMBLY—(59733-DAX)	
	*59733-DA	Primary pump shaft	1
	59736-D	Primary pump shaft coupling	1
	61927-D	Primary pump shaft coupling rivet	1

DETAILS OF ASSEMBLIES

Item No.	IHC Part No.	Description	No. Used	Price
		CONTROL RACK ASSEMBLY—(59713-DX)		
	59713-D	Control rack	1	
	59715-D	Control rack adjustment rod	1	
	59716-D	Control rack adjustment rod nut	1	
	59717-D	Control rack adjustment rod lock nut	1	
	59688-D	Control rack adjusting rod nut rivet	1	
		PLUNGER BUSHING CLAMP ASSEMBLY—(61926-DAX)		
	*61926-DA	Plunger bushing clamp	1	
	*59661-D	Fuel return check	1	
	*59662-D	Fuel return check seat	1	
		CHECK AND REVERSE VALVE BLOCK ASSEMBLY—(66392-D)		
	59644-D	Reverse check valve stop	1	
	59638-D	Check valve spring	1	
	59640-D	Check valve block clamp screw	2	
	59642-D	Reverse check valve spring	1	
	59645-D	Reverse check valve screw	1	
	59646-D	Reverse check valve screw washer	1	
	*59637-D	Check valve	1	
	*59639-D	Check valve block	1	
	*59641-D	Reverse check valve	1	
	*59643-DA	Reverse check valve block	1	
		PLUNGER ASSEMBLY—(59619-DX)		
	*59619-D	Plunger	1	
	*59621-D	Plunger bushing	1	
	*65067-D	Plunger bushing dam	2	
		PLUNGER UNIT ASSEMBLY—(66111-D)		
	59619-DX	Plunger	1	
	59623-D	Plunger bushing screw	2	
	59624-D	Plunger bushing screw gasket	2	
	59625-D	Plunger bushing retainer	1	
	61926-DAX	Plunger bushing clamp	1	
	64679-D	Plunger bushing clamp lock	1	
	59652-D	Plunger bushing clamp seal	1	
	59631-D	Plunger control gear	1	
	59633-D	Plunger spring	1	
	59634-D	Plunger spring seat	1	
	*59637-DX	Check valve	1	
	*59641-DXA	Reverse check valve	1	
	59638-D	Check valve spring	1	
	59640-D	Check valve block clamp screw	2	
	59642-D	Reverse check valve spring	1	
	59645-D	Reverse check valve screw	1	
	59646-D	Reverse check valve screw washer	1	
	59650-DA	Filter element	1	
		GOVERNOR FORK SHAFT ASSEMBLY—(59762-DX)		
	*59762-D	Governor fork shaft	1	
	59763-D	Governor fork shaft nut	1	
	59734-D	Governor fork shaft key	1	
	64060-D	Torque control lever key	1	
		DISTRIBUTOR VALVE BLOCK ASSEMBLY—(66012-D)		
	*59605-DX	Distributor valve lower block with valves and dowels	1	
	*59607-DAX	Distributor valve upper block with dowels, discharge fittings and gaskets	1	
	*65015-D	Distributor valve upper block plug	2	
	59603-D	Distributor valve spring	4	
	66010-D	High pressure pipe screw	2	

990620 O—52——23

DETAILS OF ASSEMBLIES

Item No.	IHC Part No.	Description	No. Used	Price
		PUMP HOUSING—(8970-DAX)		
*	8970-DA	Pump housing	1	
	59610-D	Valve block stud	4	
	59627-D	Plunger bushing retainer stud	4	
	59636-D	Plunger tappet bushing	1	
*	59695-D	Pump housing plug—¼" dia.	2	
*	61920-D	Pump housing plug—$\frac{3}{16}$" dia.	2	
	8976-D	Pump housing bushing	1	
	59722-D	Control lever oil seal	1	
*	43360-D	Control lever plug	1	
	45775-D	Torque control needle bearing	2	
	59604-D	Distributor valve tappet	4	
		PRIMARY PUMP UNIT—(66108-D)		
	8974-DX	Primary pump housing	1	
	59740-D	Primary pump packing spring nut	1	
	59749-D	Primary pump by-pass valve spring	1	
	59731-D	Primary pump housing cover	1	
		X No. 10—32 x ⅝" rd. hd. slotted screws	4	
		X No. 10—reg. NTPP lock washers	4	
	59732-D	Primary pump housing cover gasket—.006	As req.	
	64870-D	Primary pump housing cover gasket—.004	As req.	
	59733-DAX	Primary pump shaft	1	
	64060-D	Primary pump shaft key	2	
	65210-D	Primary pump shaft snap ring	1	
	59741-DA	Primary pump pressure gear	1	
	59742-DX	Primary pump idler gear with bushing	2	
	59743-D	Primary pump scavenging gear	1	
	59744-D	Primary pump scavenging gear gasket—.006"	As req.	
	64871-D	Primary pump scavenging gear gasket—.004"	As req.	
	59745-D	Primary pump bearing cage	1	
	59609-D	Primary pump bearing cage gasket	2	
		X No. 8—32 x ⅜" Fillister head machine screw	3	
*	59728-D	Primary pump housing plug	1	
	59729-D	Primary pump housing gasket	1	
		$\frac{5}{16}$" N. C. x 2½" rd. hd. slotted screws	2	
		$\frac{5}{16}$" reg. NTPP lock washers	2	
		PRIMARY PUMP HOUSING ASSEMBLY—(8974-DX)		
*	8974-D	Primary pump housing	1	
	59730-D	Primary pump bushing	4	
	59737-D	Primary pump packing	2	
	59738-D	Primary pump packing gland	2	
	59739-D	Primary pump packing spring	2	
*	59747-DX	Primary pump by-pass valve and seat	1	
	59750-D	Primary pump packing retainer	1	
	59751-D	Primary pump idler gear shaft	1	
*	59728-D	Primary pump housing plug	1	
		TORQUE SPRING ARM—(59784-DA)		
*	59785-D	Torque spring arm	1	
*	61944-D	Torque spring arm lever	1	
*	61945-D	Torque spring arm lever hub	2	

When ordering, always use I H C Part Nos.

MAGNETO

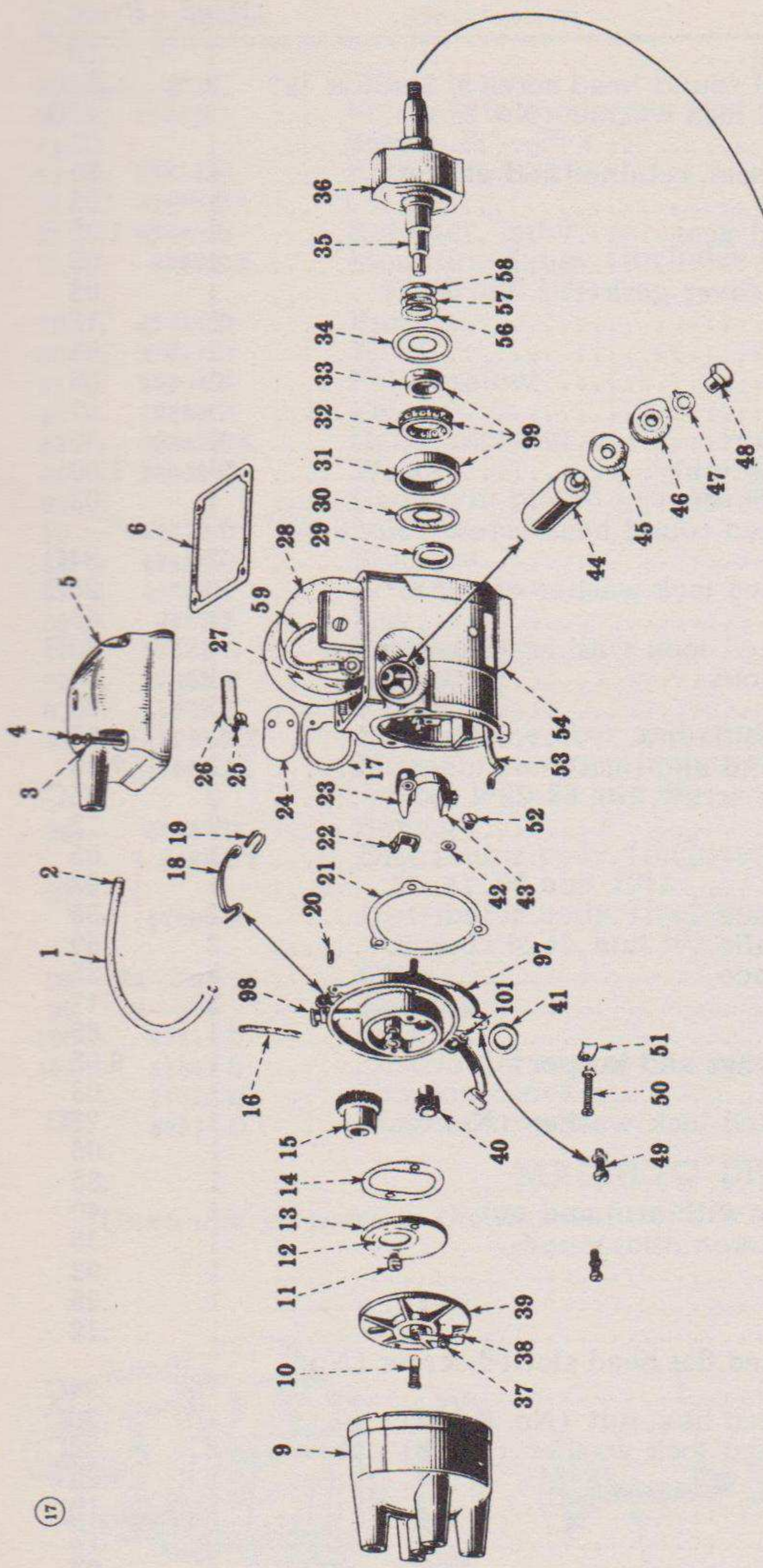

Item No.	*IHC Part No.*	*Description*	*No. Used*	*Price*
	49094-D	Magneto (IHC) (H-4)	1	$37.50
1	49125-D	Cable, with terminal	1	.12
2	37291-D	Terminal	2	1.50C
3	38609-DA	Washer	4	.02
4	49791-D	Screw	4	.03
5	47449-DAY	Cover	1	.90
6	47453-D	Gasket	1	.05
	47413-DX	Cap	1	1.70
9	47413-DY	Cap with brush and spring	1	1.75

MAGNETO

Item No.	IHC Part No.	Description	No. Used	Price
10	32032-DXA	Brush and spring	1	.10
11		Cadmium plated round head screws, 8—32 x ½"	2	.39C
		Cadmium plated lock washer (No. 8)	2	.26C
12	49418-D	Felt	1	.03
13	49416-DX	Cover with felt seal, retainer and gasket	1	.30
14	49419-D	Gasket	1	.03
15	49420-DX	Spindle core and gear	1	1.35
16	E4—216	Oil well felt	1	.05
17	48472-D	Condenser hole cover gasket	1	.03
18	51666-D	Spring	2	.12
19	55855-D	Pin	1	.03
20	47424-D	Pin	1	.03
21	47408-D	Gasket	1	.07
22	21388-DBX	Point with support	1	.40
23	47431-DB	Breaker arm assembly	1	1.00
24	55015-D	Condenser hole cover	1	.03
		Cadmium plated round head screw (No. 8—32 x ⅜")	2	.34C
		Cadmium plated lock washer (No. 8)	2	.26C
25	E4A—546	Screw	1	.05
		Cadmium plated lock washer (No. 4)	1	.26C
26	47452-D	Secondary lead-out	1	.05
	21314-DX	Coil core	1	.85
27	57926-DX	Coil with end insulators	1	6.35
	47439-DAX	Coil with core and end insulators	1	7.15
		Flat head slotted screw, No. 8—32 x ⅝"	2	.35C
28	49593-D	Insulator	2	.12
29	E4—226	Felt	1	.05
30	47454-D	Retainer, inner	1	.03
31	E4A—352	Bearing outer race	2	.35
32	E4A—353	Retainer with balls	2	.60
33	E4A—351	Bearing inner race	2	.35
34	E4A—324	Oil flinger	2	.17
35	60094-D	Cam	1	.65
36	49090-DXR	Rotor with bearings and keeper	1	9.65
37	47427-D	Nut	1	.03
		Cadmium plated lock washer (No. 6)	1	.26C
38	47428-D	Arm	1	.05
39	47425-DX	Distributor rotor	1	.35
	47425-DY	Distributor rotor with arm and nut	1	.40
40	47417-DX	Pinion and plug	1	.55
41	49423-D	Felt seal	1	.03
42	21394-D	Washer	1	.05
43	47432-D	Spring anchor	1	.12
		Cadmium plated flat head slotted screw (No. 8—32 x ⅜")	1	.34C
		Cadmium plated hex. nut (No. 8—32)	1	.39C
		Cadmium plated lock washer (No. 8)	1	.26C
44	21409-DB	Condenser	1	.85
45	47438-DA	Washer, inner	1	.12
46	48341-D	Washer, outer	1	.12
47	48342-DA	Lock washer	1	.03
48	48340-DA	Terminal	1	.05
49	47409-D	Screw	3	.03
		Cadmium plated lock washer (No. 10)	3	.26C
50		Fillister head slotted screw, No. 8—32 x 1¼"	1	.50C
51	48339-D	Clip	1	.03
		Cadmium plated lock washer (No. 8)	1	.26C
52	21393-D	Screw	1	.05
53	47433-DX	Primary lead-out	1	.12
54	6482-DAY	Frame (includes Item Nos. 17, 42, 29, 30 and 31)	1	6.60
56	E4A—305	Shim, light	as req.	.05
57	E4—212	Shim, medium	as req.	.05

MAGNETO

Item No.	IHC Part No.	Description	No. Used	Price
58	E4A—372	Shim, heavy	as req.	.05
59	47442-D	Primary to condenser lead-out tube	1	.03
74		Screw, ¼"—20 x 9/16"	4	1.30C
75	47474-D	Retainer, inner	1	.03
76	47475-DA	Oil seal	1	.17
77	47473-D	Retainer, outer	1	.05
78	6783-DX	Mounting flange (includes Item Nos. 31, 75, 76, 77, 88 and 100)	1	2.20
79	47465-D	Button	2	.05
80	47464-D	Wick	1	.07
81	47294-D	Felt retainer	1	.12
82	47295-D	Felt	1	.05
83	49093-DX	Drive member	1	1.65
84	24603-D	Washer	1	.03
85		Cadmium plated lock washer, ½"	1	.52C
86	47470-D	Nut	1	.12
88	47468-D	Stop pin	1	.03
89	46785-D	Lock washer	4	.65C
90	4167-T	Key	1	.65C
91	47461-D	Washer	2	.03
92	47462-D	Snap ring	2	.03
93	49092-D	Pawl	2	.45
95	49091-DX	Magneto member and pawl pin	1	1.65
	49091-DZ	Magneto member (includes 49093-DX and Item Nos. 79 to 83 and 96)	1	4.65
96	47822-D	Spring	1	.22
97	6483-DY	Distributor body (includes Item Nos. 16, 18 to 21, 41, 98 and 101)	1	1.75
	56066-D	Distributor body (includes 6483-DY and Item Nos. 11 to 15, and 40)	1	3.85
98	E4—295	Oiler	1	.09
99	E4—294	Bearing	2	1.30
100	27311-D	Oiler	1	.09
101	51667-D	Distributor cap spring pin	1	.03
	21342-D	Breaker cam key	1	.03
	57314-D	Magnet keeper	1	.17

MAGNETO DRIVE

Unnumbered parts in the illustrations are the same as corresponding parts shown with numbers.

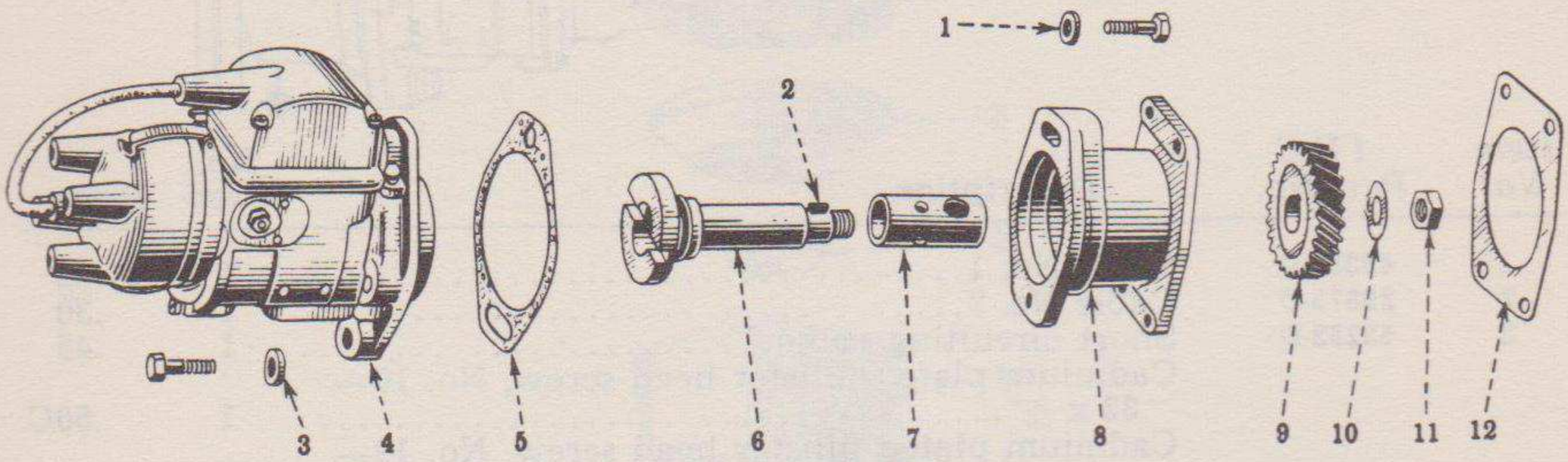

1	62493-D	Bolt washer	1	$ .01
2	4167-T	Key	1	.65C
3	62493-D	Bolt washer	1	.01
4	49094-D	Magneto	1	37.50
		Cap screw, 3/8—16 x 1 7/8" N.C.	1	3.30C
		Cap screw, 3/8—16 x 1½" N.C.	1	2.70C
		Lock washer, 3/8"	2	.35C
5	55780-DA	Flange gasket	1	.05

MAGNETO DRIVE

Item No.	IHC Part No.	Description	No. Used	Price
6	45001-D	Magneto drive shaft	1	3.55
7	24473-D	Bushing	1	.45
8	8394-DX	Bracket, with bushings	1	3.00
		Cap screw, 3/8" N.C. x 1 3/8"	4	2.70C
		Lock washer, 3/8"	4	.35C
9	53264-D	Gear	1	2.75
10	45003-D	Nut lock	1	.03
11		Hex. jam nut, 5/8" N.F.	1	3.50C
12	50360-D	Gasket	1	.12

SPARK PLUG CABLES

Unnumbered parts in the illustrations are the same as corresponding parts shown with numbers.

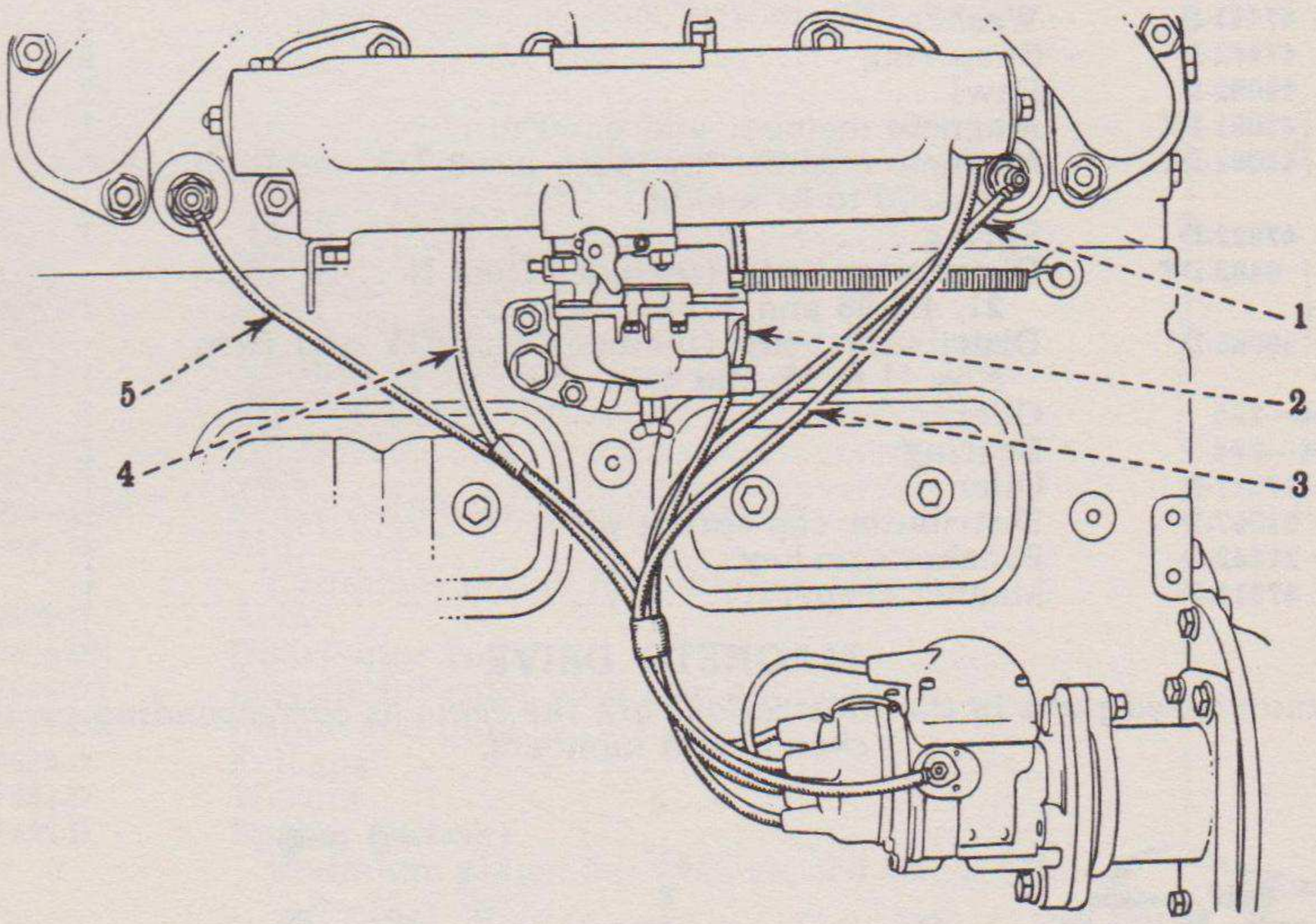

Item No.	IHC Part No.	Description	No. Used	Price
1	49359-D	Cable No. 1	1	$ .35
2	29873-D	Cable No. 2	1	.30
3	53262-D	Short circuiting cable	1	.45
		Cadmium plated fillister head screw, No. 10—32 x 5/16"	1	.50C
		Cadmium plated fillister head screw, No. 10—32 x 3/8"	1	.50C
		Cadmium plated lock washer, No. 10	2	.26C
4	29340-D	Cable No. 3	1	.30
5	29874-D	Cable No. 4	1	.35
6	53263-DA	Spark plug cable assembly	1	1.20
	27618-D	Cable reinforcement	4	.50C
	37291-D	Cable terminal (push type)	4	1.50C
	1924-T	Cable terminal (ring type)	4	3.00C

When ordering, always use I H C Part Nos.

AIR CLEANER AND CONNECTIONS

Item No.	IHC Part No.	Description	No. Used	Price
	56000-DX	Air cleaner, complete (consists of Items Nos. 6, 7, 8, 9 and 10)	1	$34.00
1	49464-DA	Air intake cap	1	1.85
6	56500-D	Body assembly	1	22.00
		Square head bolt, $\frac{5}{16}$" N.C. x 5½"	2	3.35C
		Wing nuts, $\frac{5}{16}$" N.C.	2	.05
		Washers, $\frac{5}{16}$"	1	.25C
7	54263-D	Housed screen	1	1.55
8	54271-D	Housed screen and baffle assembly	1	2.45
9	30088-DX	Screen clamp, with screw and nut	1	.60
		Fillister head screw, ¼" N.F. x 1"	1	.85C
		Square nut, ¼" N.F.	1	.40C
10	54267-D	Oil cup assembly	1	3.30

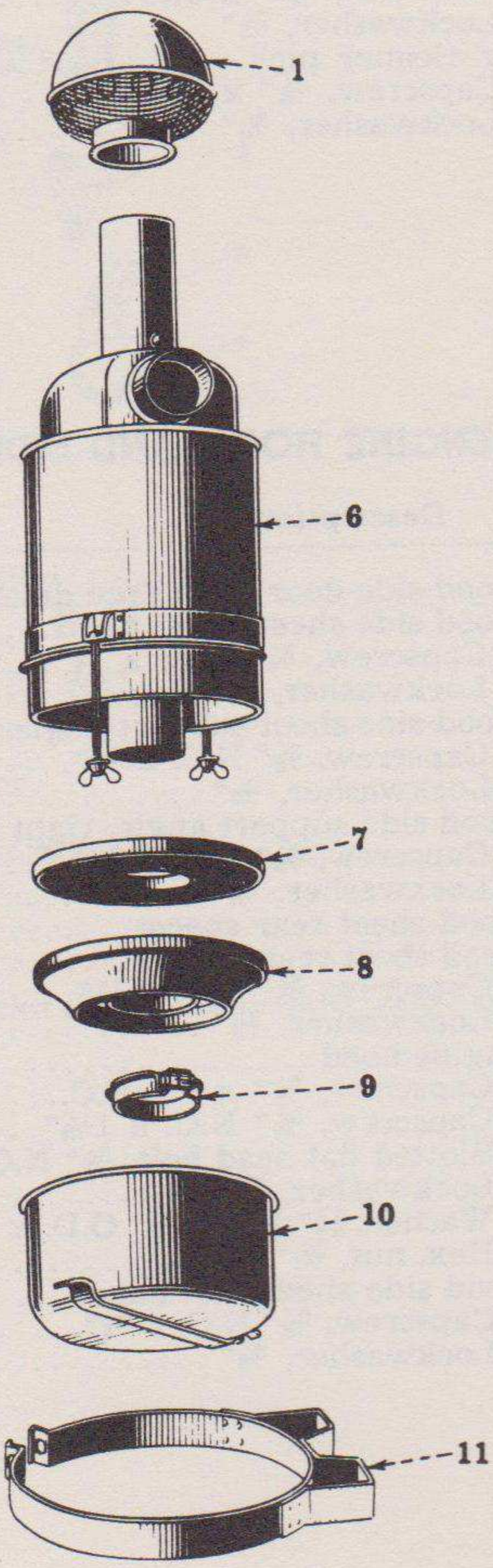

AIR CLEANER AND CONNECTIONS

Item No.	IHC Part No.	Description	No. Used	Price
11	58056-DMX	Air cleaner bracket and band	1	.90
		Hex. nut, ½" N.C.	4	2.20C
		Square nuts, ⅜" N.C.	2	.80C
		Lock washers, ½"	4	.50C
		Fillister head screws, ⅜" N.C. x 1"	2	2.70C
		Lock washers, ⅜"	2	.35C
	91406-HA	Air cleaner pipe hose clamp	2	.08
	58058-DM	Air cleaner pipe hose, 2¾" I.D. x 3¼" long	1	.55
	50529-D	Air cleaner pipe flange gasket	1	.09
	61009-DMX	Air cleaner support	1	2.00
		Cap screw, ½" N.C. x 1"	2	5.10C
		Capscrew, ½" N.C. x 2"	2	6.70C
		Lockwasher, ½"	4	.50C
	61011-DM	Air cleaner support sheet	1	1.20
		Capscrew, ⅜" x ¾" N.C.	2	2.10C
		Hex. nut, ⅜" N.C.	2	1.10C
		Lockwasher, ⅜"	2	.35C
	61014-DMX	Air cleaner pipe	1	5.25
		Capscrew, ⅜" x 1" N.C.	4	2.30C
		Lockwasher, ⅜"	4	.35C

ENGINE HOOD AND SIDE DOORS

No. Item	Part No. IHC	Description	No. Used	Price
	27159-DB	Hood side door latch (see detail list)	4	$1.25
	59217-DX	Hood side sheet, right hand	1	3.85
		Capscrew, ⅜" N.C. x ¾"	6	2.10C
		Lockwasher, ⅜"	6	.35C
	59219-DX	Hood side sheet support angle, left hand	1	
		Capscrew, ⅜" N.C. x ¾"	2	2.10C
		Lockwasher, ⅜"	2	.35C
	59220-DX	Hood side support angle, right hand	1	
		Capscrew, ⅜" N.C. x ¾"	2	2.10C
		Lockwasher, ⅜"	2	.35C
	61012-DM	Hood sheet rear spacer	2	
	61013-DMX	Hood sheet rear	1	
		Capscrew, ⅜" N.C. x ¾"	4	2.10C
		Lockwasher, ⅜"	4	.35C
	61016-DM	Engine hood	1	14.00
		Capscrew, ⅜" x ¾" N.C.	8	2.10C
		Capscrew, ⅜" N.C. x 1⅛"	1	2.50C
		Slotted flat head bolt, ⅜" N.C. x 1⅛"	3	2.25C
		Lockwasher, ⅜"	12	.35C
		Washer, $\frac{13}{32}$" I.D. x $\frac{13}{16}$" O.D. x 16 ga.	8	.40C
		Hex. nut, ⅜" N.C.	4	1.10C
	61017-DMX	Hood side sheet, left hand	1	
		Capscrew, ⅜" N.C. x ¾"	6	2.10C
		Lockwasher, ⅜"	6	.35C

HOOD SIDE DOOR LATCH — 27159 DA

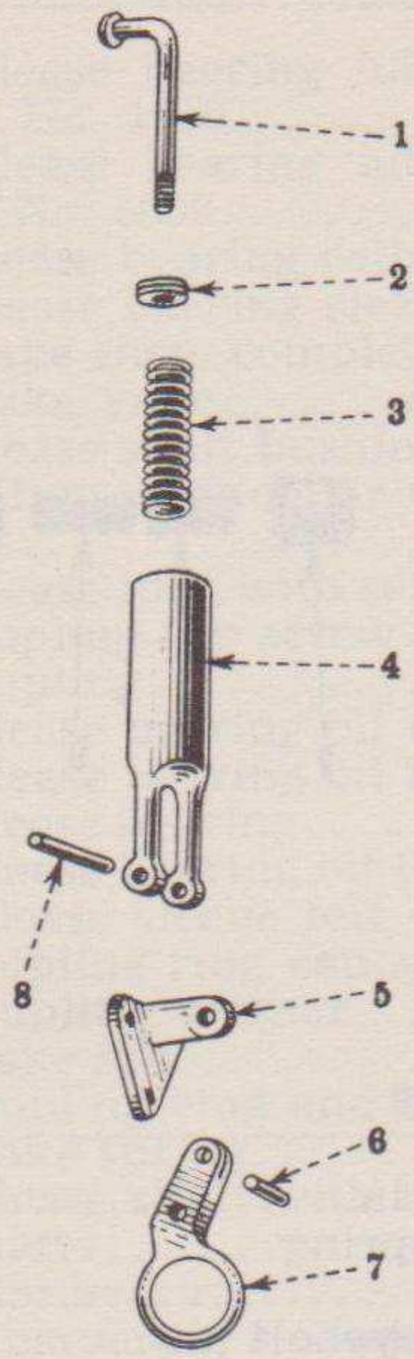

Item No.	*I H C Part No.*	*Description*	*No. Used*	*Price*
1	58099-DA	Spring bolt	4	$ .10
		Hex. nut, $\frac{5}{16}$" N.C.	4	.75C
2	58101-D	Bolt guide	4	.10
3	64159-D	Spring	4	.05
4	8815-D	Spring holder	4	.45
5	8817-D	Bracket	4	.17
		Rivet, $\frac{3}{16}$" x $\frac{5}{8}$"	12	.20C
6	58103-D	Toggle pin	4	.01
7	8816-D	Toggle	4	.20
8	G-9210	Holder pin	4	.03

Don't order parts from the illustrations only; refer to the list also.

PARTS LIST

SPRING LOADED CLUTCH (14-INCH SINGLE PLATE)

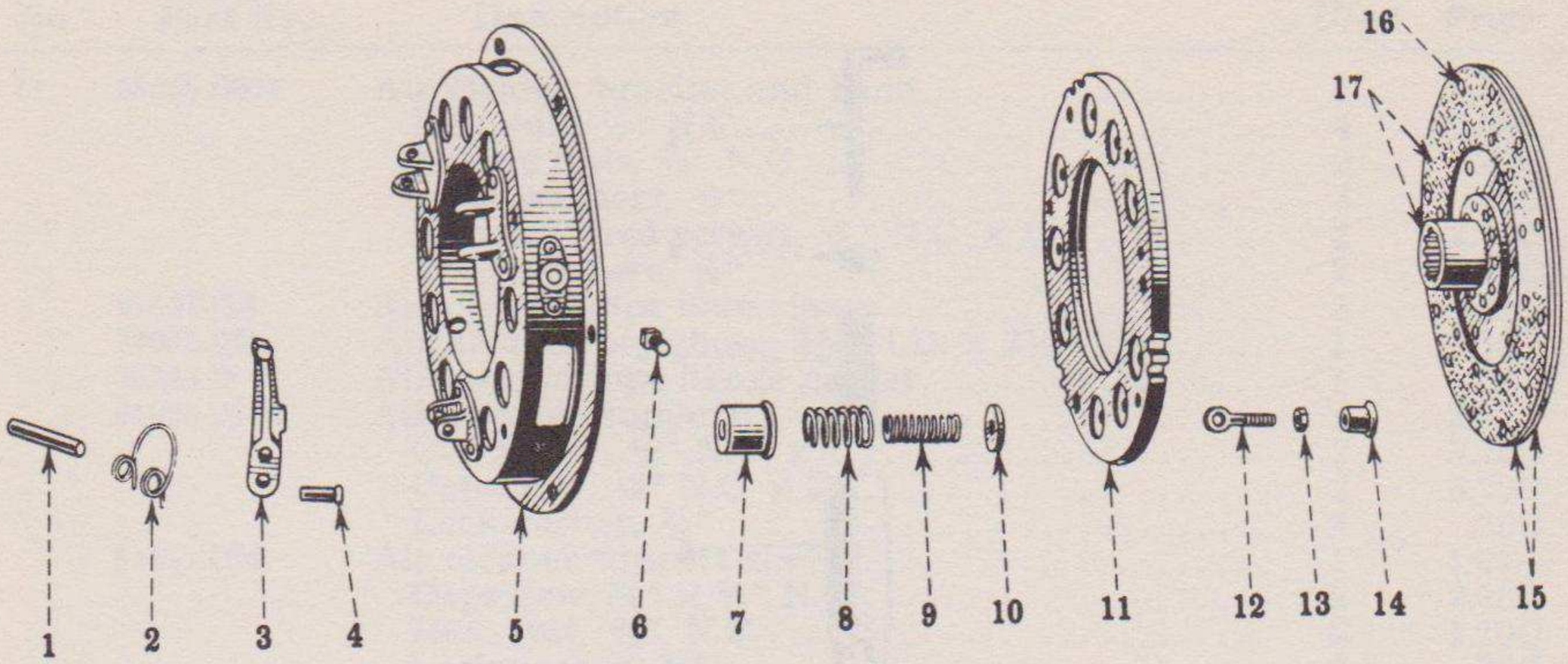

Item No.	*I H C Part No.*	*Description*	*No. Used*	*Price*
1	16883-D	Release lever pin	3	.12
2	16885-D	Release lever spring	3	.12
3	12978-DA	Release lever	3	.75
4	26480-D	Release lever eyebolt pin	3	.12
5	14602-DX	Cover plate, complete	1	6.60
6	12983-D	Clutch pressure plate driving pin	3	.17
7	12981-DA	Clutch pressure plate spring cup	12	.07
8	36932-DA	Clutch pressure outer spring	12	.12
9	36933-DA	Clutch pressure inner spring	12	.12
10	36935-D	Pressure spring insulating cup assembly	12	.17
11	968-D	Clutch pressure plate	1	$7.00
12	12982-D	Release lever eyebolt	3	.17
13	21239-D	Release lever eyebolt nuts	3	.05
14	12989-D	Release lever eyebolt sleeve	3	.12
15	12988-DX-VL	Friction facing package (2 Chevron facings)	2	7.30
16	37508-D	Clutch friction facing rivet, 3/8" long (36 used)	36	1.10 Per ½ lb.
17	14604-D-VL	Clutch driven disc and Chevron facing assembly	1	14.00
	26304-H	Tubular rivet, 5/16" long (12 used)	12	.01
	11820-DA-VL	Assembly, clutch	1	36.50

Don't order parts from the illustrations only; refer to the list also.

When ordering, always use I H C Part Nos.

CLUTCH CONNECTIONS

Item No.	IHC Part No.	Description	No. Used	Price
	14186-DA	Clutch release bearing lubricator (optional) Alemite No. 1610	1	$ .05
	Q-3615	Clutch release bearing lubricator (optional) Lincoln No. 5000	1	.05
	775-DBXA	Clutch release bearing collar, complete	1	5.70
	776-DA	Clutch release bearing sleeve	1	1.75
	3972-DX	Clutch brake shoe, complete	1	1.00
	3973-D	Clutch brake yoke	1	1.25
	4447-DB	Clutch release shaft bushing	2	.75
	4734-D	Clutch shifter shaft collar with set screws and nuts	2	.35
	5124-D	Clutch release fork with set screw and nut	1	2.20
	10722-D	Clutch coupling cap screw	6	.09
	10725-D	Clutch coupling	1	3.00
	11844-DA	Clutch release bearing oil tube (optional)	1	.75
	39806-DX	Clutch release bearing oil tube (optional)	1	.90
	14227-HA	Clutch release bearing	1	6.40
	13199-D	Clutch release bearing oil tube elbow	1	.40
	15943-D	Clutch release sleeve felt washer	1	.12
	21725-D	Clutch coupling ring cap screw	6	.09
	30371-D	Clutch coupling washer	3	.25
	30372-D	Clutch brake shoe	1	.12
	30376-D	Clutch coupling ring and brake drum	1	7.60
	30509-D	Clutch brake spring	1	.45
	37749-DMX	Clutch release shaft with lever and key	1	2.20
	61021-DM	Clutch shaft	1	7.15
	11669-K	Clutch pilot bearing	1	4.25
	10730-D	Coupling capscrew lockwire	3	.07
	10730-D	Coupling ring capscrew lockwire	3	.07

MISCELLANEOUS PARTS

Item No.	IHC Part No.	Description	No. Used	Price
	55860-DA	Starting crank assembly	1	$4.15
	58220-DX	Starting motor shield, complete	1	1.20

TOOLS

Item No.	IHC Part No.	Description	No. Used	Price
	10720-D	Socket wrench (for $\frac{9}{16}$" nut)	1	$ .75
	11858-DA	Water pump wrench (Hook type)	1	.12
	12737-DA	"S" wrench (¼" and $\frac{5}{16}$")	1	.25
	13067-D	Monkey wrench (11")	1	
	21264-D	Wrench (for manifold stud nuts)	1	.50
	21438-DBXA	Breaker point gauge	1	.12
	25466-D	Spark plug wrench handle	1	.40
	27051-D	Alemite hydraulic compressor (9 oz.)	1	4.00
	32941-D	Spark plug wrench	1	.45
	8-E	Adjustable wrench (12")	1	
	1325-EA	"S" wrench ($\frac{1}{16}$" and ½")	1	.35
	1326-E	Wrench (¾" and ⅞")	1	.40
	1595-E	Wrench (15° angle socket)	1	.35
	H-156	Oil can	1	.25
	2585-T	Wood handle monkey wrench (12")	1	2.75
	2587-T	Pliers (8")	1	.35
	2588-T	Screw driver (5")	1	.25

PARTS LIST

INDEX

BENDIX DRIVE 11
ELECTRICAL PARTS WIRING, REGULAR 2-3
ELECTRICAL PARTS WIRING, BLACKOUT 5-6
GENERATOR 12
GENERATOR DRIVE 15
HEADLIGHT, REGULAR 4
HEADLIGHT, BLACKOUT 7
MAGNETIC STARTER SWITCH 11
MAGNETO—REFER TO ENGINE SECTION .....
STARTING MOTOR 10
TAIL LIGHT, REGULAR 4
TAIL LIGHT, BLACKOUT 7
VOLTAGE REGULATOR 14
WIRING DIAGRAM, REGULAR 2
WIRING DIAGRAM, BLACKOUT 5
SPOTLIGHT 8

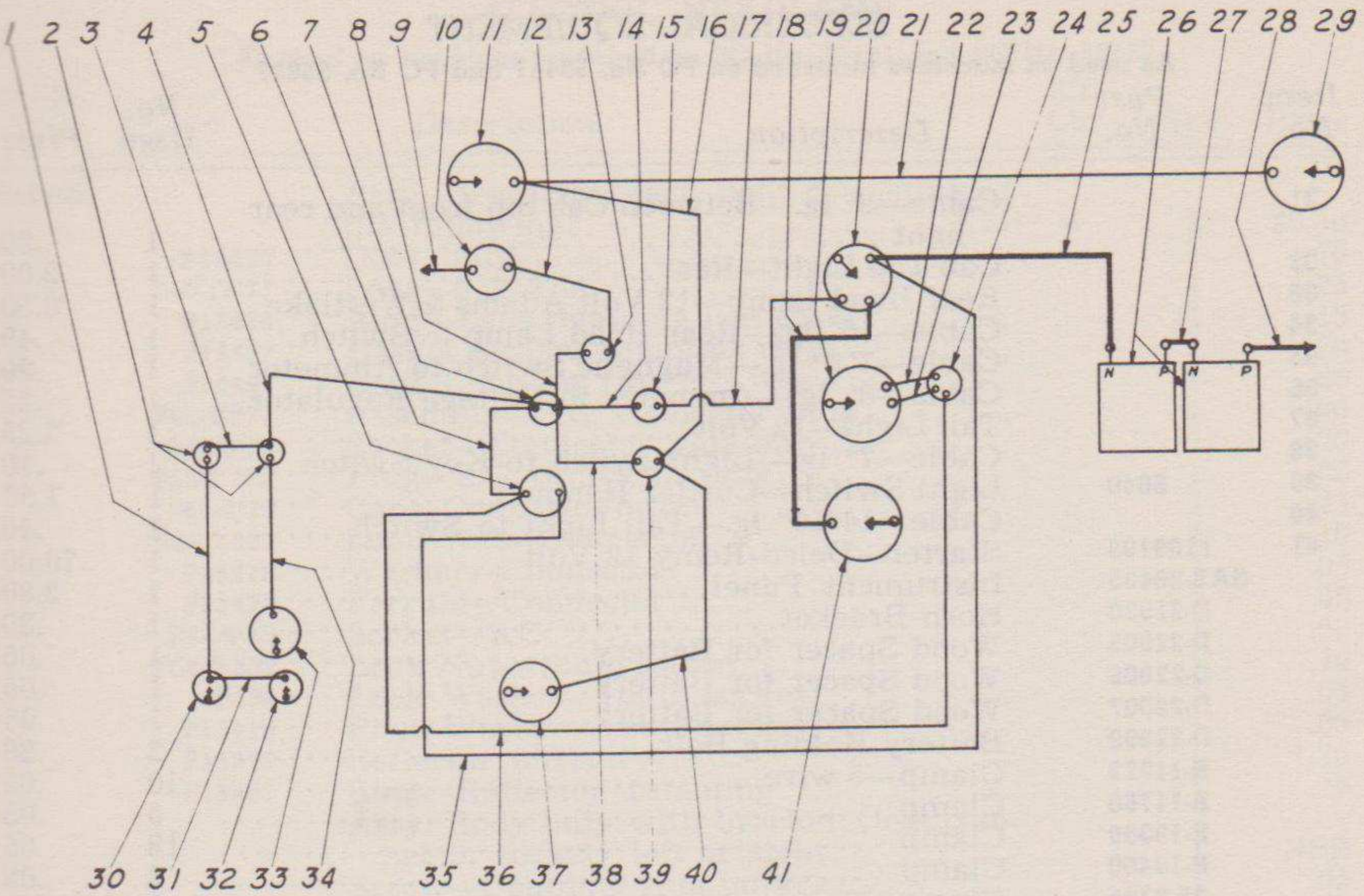

Fig. 1—Electrical Wiring.

"The following Electrical Equipment on Pages 2, 3 and 4 is used on machines on Purchase Order 55441 and 55897 with standard lighting"—Refer to Pages 5 to 8 for blackout lighting.

ELECTRICAL EQUIPMENT

See Figure 1

Item No.	Part No.	Description	No. Used	Price
1		Cable—16 AWG. Switch to Cab top light—front.	1	$ .30
2	8640	Light Switch—Cuttler Hammer	2	1.50
3		Cable—No. 16 AWG 6" Between Light Switch	1	.05
4		Cable—7½"—Light Switch to Key Switch	1	.10
5	693-A	Ammeter—Stewart Warner	1	2.40
6		Cable—6" lg.—Ammeter to Key Switch	1	.05
7	50704	Key Switch—Briggs & Stratton	1	1.00
8		Cable—6" lg.—Key Switch to Horn Button	1	.05
9	SA-23404	Cable—No. 14 AWG—Horn Ground	1	.50
10	4007	Horn—Motovex 12 Volt	1	3.00
11		Head Lamp—12 Volt Adams & Westlake	1	6.50
12		Cable—32" lg.—Horn to Horn Button	1	.15
13	8189-F	Horn Button	1	.75
14		Cable—6" lg.—Starter Switch to Key Switch	1	.05
15	XA-456	Starter Switch—Auto-Lite	1	1.00
16		Cable—6' lg.—Light Switch to Head Light	1	.05
17		Cable—9' 5"—Starter Switch to Starter	1	.35
18	SA-23406	Cable—Magnetic Switch to Starter—4' 3"	1	2.45
19	1101726	Generator—12 Volt Delco-Remy	1	22.50
20	1422	Magnetic Switch—Delco-Remy	1	9.50
21		Cable—8' 8" lg.—Between Head Lights	1	.30
22	SA-26479	Cable—Generator to Voltage Regulator—8' 3"	1	.30
23	SA-26480	Cable—Generator to Voltage Regulator—8' 3"	1	.30
24	005884	Regulator—Voltage	1	4.75
25	SA-22673	Cable—Battery to Magnetic Switch—21½"	1	2.00
26	R-11721	Battery—17 Plate, 6 Volt (wet charged)	2	15.00
27	SA-22675	Cable—Between Batteries—8½"	1	1.25
28	RSA-11720	Cable—Battery Ground—13"	1	1.20
29		Head Lamp—12 Volt Adams & Westlake	1	6.50
30		Cab Top Light—Front	1	2.00

ELECTRICAL EQUIPMENT

As used on machines furnished on PO No. 55441 and PO No. 55897

Item No.	*Part No.*	*Description*	*No. Used*	*Price*
31		Cable—9′ lg.—Between Cab top front and rear light	1	.30
32		Cab Top Light—Rear	1	2.00
33		Rear Head Lamp—12 Volt Adams & Westlake	1	6.50
34		Cable—15′ lg.—Rear Head Lamp to Switch	1	.45
35		Cable—7′ 6″ lg.—Magnetic Switch to Ammeter	1	.20
36		Cable—8′ lg.—Ammeter to Voltage Regulator	1	.25
37		Tail Light—12 Volt	1	2.25
38		Cable—7″ lg.—Light switch to Key Switch	1	.10
39	8640	Light Switch—Cuttler Hammer	1	1.50
40		Cable—14″10″ lg.—Tail Light to Switch	1	.40
41	1109108	Starter—Delco-Remy 12 Volt	1	70.00
	SAB-26435	Instrument Panel	1	2.80
	D-21920	Horn Bracket	1	.30
	D-22005	Wood Spacer for Battery	1	.05
	D-22006	Wood Spacer for Battery	1	.05
	D-22007	Wood Spacer for Battery	1	.05
	D-22399	Battery Holding Bolt	2	.20
	R-11723	Clamp—5 wire	10	.05
	R-11760	Clamp	5	.05
	R-19399	Clamp	18	.05
	R-19400	Clamp	2	.05
	25-8294	Clamp	3	.10
	G-1204	Grommets—⅝″	2	.03
	G-1273	Grommets—½″	2	.02
	G-1228	Grommets—⅜″	2	.02
	G-1107	Grommets—$\frac{5}{16}$″	1	.02
	13-A	Sherman Terminals		.05
21		B.H. Magneto Tube—2″ lg.		.02
		Capscrew—⅜″ x 2¼″ lg. U.S.S.	1	3.60C
		Capscrew—$\frac{5}{16}$″ x ¾″ lg. U.S.S.	2	1.70C
		Capscrew—$\frac{3}{16}$″ x 1″ lg. U.S.S.	15	1.60C
		Capscrew—⅜″ x 1¾″ lg. U.S.S.	5	2.20C
		Capscrew—½″ x 1⅛″ lg. U.S.S.	1	5.50C
		Capscrew—½″ x 1½″ lg. U.S.S.	1	5.90C
		Capscrew—$\frac{5}{16}$″ x 1¼″ lg. U.S.S.	2	2.10C
		Mach. Screw No. 10—24 x 1″ lg.—Rd. Hd.	40	.50C
		Bolt—¼″ x ¾″ lg.	2	.90C
		Nut—⅜″ U.S.S.	6	1.10C
		Bolt—¼″ x 1″ lg.	1	.95C
		Nut—½″ Hex. U.S.S.	1	2.20C
		Nut—Hex. No. 10—24	30	.35C
		Lockwasher—$\frac{5}{16}$″	4	.25C
		Lockwasher—¼″	3	.25C
		Lockwasher—$\frac{3}{16}$″	55	.20C
		Lockwasher—⅜″	6	.35C
		Lockwasher—½″	2	.50C
		Flatwasher—¼″	1	.25C
		Flatwasher—⅝	1	1.00C
		Cotter Pin—$\frac{1}{16}$″ x 1″ lg.	2	.15C
		Hex. Nut—$\frac{5}{16}$″ U.S.S.	2	.75C

Don't order parts from the illustrations only; refer to the list also.

ELECTRIC HEADLAMP

As used on machines furnished on PO No. 55441 and PO No. 55897

Item No.	*Part No.*	*Description*	*Wt. Lbs.*	*Req.*	*Price*
4527-S		Assy. Headlight, each light consisting of the following:	4	2	$6.50
	P15490	Door only		1	.75
	P10-18-71	Lens—6 3/16" Dia.		1	1.25
	P15488	Ring—Lens retaining less gasket		1	.15
	P15487	Gasket for lens retaining ring		1	.20
	P15497	Assy. Coupling ring less screw		1	.20
	P65-1-227	Assembly—S.C. connector plug		1	.90
	P64-3-55	Socket—Connector plug only		1	.70
	P65-2-233	Plug—S.C. connector only		1	.25
	P64-2-10	Cap—Connector only		1	.25
	P64-3-303	Lock Nut—Connector		1	.10
	P15418	Washer—Connector		1	.05
	P15473	Ferrule—Connector		1	.05
	P64-3-46	Socket—S.C.		1	.50
	P64-3-303	Lock Nut—(bulb socket)		1	.10
	P159	Lock Washer—(bulb socket)		1	.05
	P15418	Plain Washer—(bulb socket)		1	.05
	P15375	Reflector only		1	1.20
	P15489	Ring—Reflector retaining		1	.15
		Assy. Body only with bracket (less connector socket) left or right		1	NSS
		Screw—Coupling ring only		1	.05
		Bulb—21CP 12 V S.C.		1	.35
	D-24044	Bracket—Rear Light		1	.60
	D-24488	Bracket—Headlight, R. H.		1	.60
	D-24826	Bracket—Headlight, L. H.		1	.60

ELECTRIC TAIL LAMP

As used on machines furnished on PO No. 55441 and PO No. 55897

No. Item	*No. Part*	*Description*	*Wt. Lbs.*	*Req.*	*Price*
4518-G		Assy. Tail Light Complete, each light consisting of:	3/4		$2.25
	15568	Body only		1	NSS
	40779	Socket—Electric (S.C.)		1	.45
	G-8	Bulb (12V., 4CP., S.C.)		1	.12
	43852	Window		1	.10
	43589	Nuts—mounting (1/4" No. 28 S.A.E.)		2	.05
	318-C	Lens—Ruby 3 1/8"		1	.35
	43378	Ring—3 1/8" Wire retaining		1	.10
	40127	Gasket—3 1/8" Flat Rubber		1	.05
	40844	Plug—Connector (S.C.)		1	.50
		Screw—Socket Holding (1/8" No. 4-36 R. H. brass mach.)		1	.05

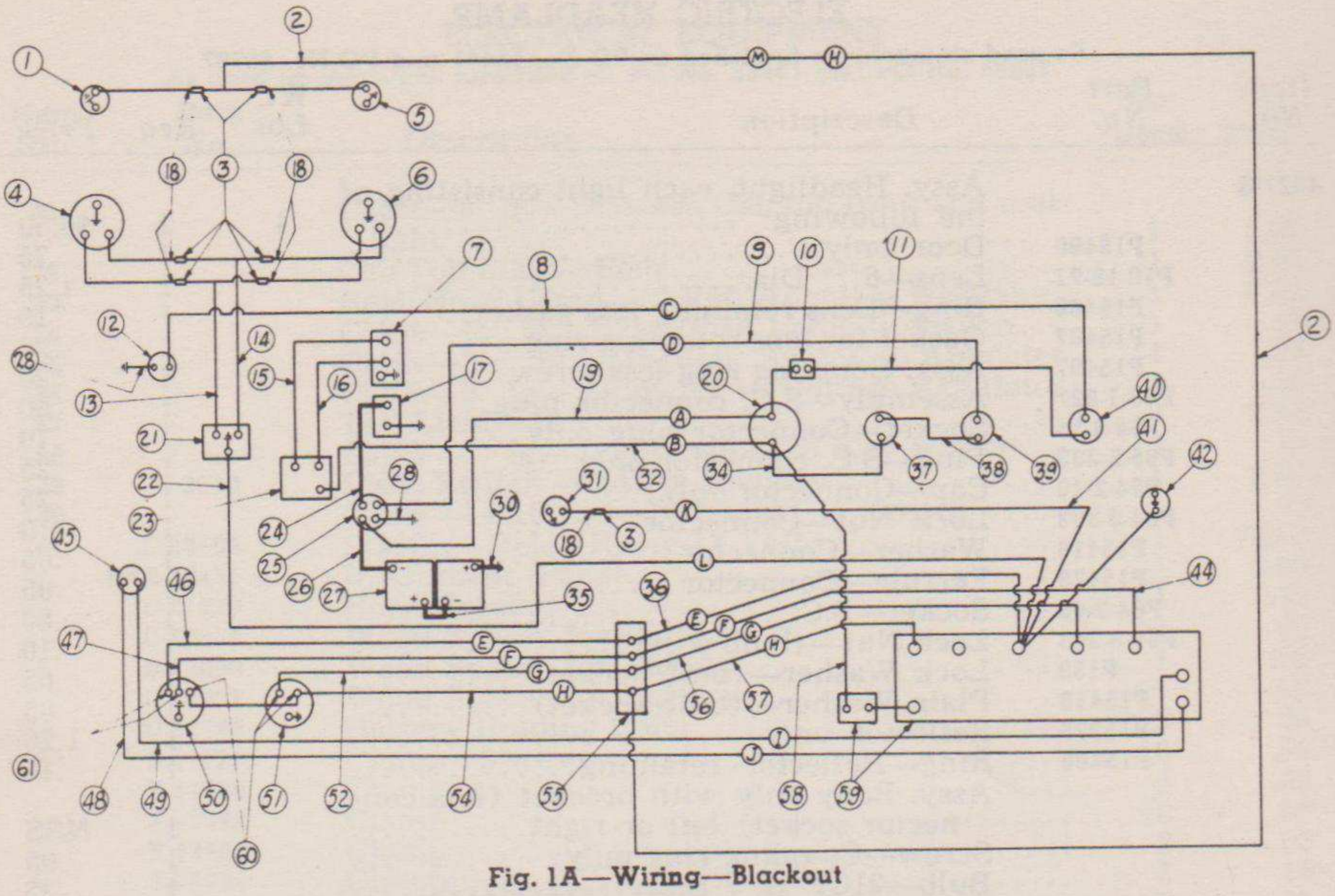

Fig. 1A—Wiring—Blackout

ELECTRICAL EQUIPMENT

See Figure 1A

The following parts cover blackout lighting as used on graders on PO PI-2364, PI-2967 and PI-3193. These machines are not equipped with cabs. For regular lighting for graders equipped with cabs refer to pages 2 to 4.

Item No.	*Part No.*	*Description*	*Quan.*	*Price*
1	971-1	Blackout head lamp, 12 volt (see breakdown) . . .	1	$1.70
2	SA-27021	Cable—No. 14 AWG x 12′ lg.	1	1.15
3	2321	Connector—two wire—Douglas	7	.05
4	867-ORD	Head lamp—service 12 volt (see breakdown) . . .	1	3.25
5	971-1	Blackout head lamp, 12 volt (see breakdown) . . .	1	1.70
6	867-ORD	Head lamp—service 12 volt (see breakdown) . . .	1	3.25
7	1101726	Generator, 12 volt (Delco Remy)	1	22.50
8	SA-27008	Cable—No. 16 AWG x 32″ lg. Horn to button. . . .	1	.15
9	SA-27012	Cable—starting switch to magnetic switch—7′ 6″	1	.75
10	CA-10	Circuit breaker for horn—Klixon	1	1.15
11	SA-27022	Cable—ammeter to born button—7½″ lg.	1	.10
12	4007	Horn—12 volt Motovox	1	3.00
13	SA-26989	Cable—Dimmer switch to service head light No. 14 AWG x 14′ 6″ lg.	1	1.20
14	SA-26989	Cable—Dimmer switch to service head light No. 14 AWG x 14′ 6″ lg.	1	1.20
15	SA-26480	Cable—generator to voltage regulator, 8′ 3″ lg. . .	1	.30
16	SA-26995	Cable—generator to voltage regulator, 8′ 3″ lg. . .	1	.30
17	1109108	Starter—12 volt—(Delco Remy)	1	70.00
18	51322	Terminal—Douglas	8	.02
19	SA-27007	Cable—ammeter to magnetic switch, 7′ 6″ lg. . . .	1	.75
20	693-A	Ammeter—Stewart Warner	1	2.40
21	5975	Dimmer switch—Douglas	1	1.00
22	SA-27019	Cable—light switch to dimmer switch No. 14 AWG x 3′ lg.	1	.60
23		Voltage regulator (Delco-Remy No. 005884)	1	4.75
24	SA-23406	Cable—magnetic switch to starter switch, 4′ 3″ . .	1	2.45
25	1422	Magnetic switch, 12 volt, Delco-Remy	1	9.50
26	SA-22673	Cable—battery to magnetic switch, 21½″	1	2.00
27	R-11721	Battery—17 plate, 6 volt (wet charged)	2	15.00

ELECTRICAL EQUIPMENT

Item No.	Part No.	Description	Quan.	Price
28	SA-23404	Cable—horn ground, 7"	1	.50
30	RSA-11720	Cable—battery ground, 13"	1	1.20
31	486	Spot light with switch, 12 volt (see breakdown)	1	7.65
32	SA-27006	Cable—generator to ammeter, 7'	1	.85
34	SA-27010	Cable—Ammeter to ignition switch, 6'	1	.50
35	SA-22675	Cable—between batteries, 8½"	1	1.25
36	SA-27016	Cable—light switch to service tail light terminal, 13"	1	.55
37	6282	Ignition switch—Douglas	1	1.25
38	SA-27011	Cable—ignition switch to starter switch, 6"	1	.05
39	XA-456	Push button starter switch	1	1.00
40	8189-F	Horn button	1	.75
41	SA-27020	Cable—light switch to spot light, 10' 8"	1	1.00
42	2902	Instrument panel light, 12 volt (use Mazda No. 67 bulb)	1	.60
44	SA-27015	Cable—light switch to service stop light terminal, 14"	1	.55
45	FC-7715	Switch—stop light—Wagner	1	.55
46	SA-26994	Cable—service tail light to terminal, 14'	1	1.15
47	SA-26993	Cable—service stop light to terminal, 14'	1	1.15
48	SA-27014	Cable—light switch to stop light switch, 17'	1	1.15
49	SA-27013	Cable—light switch to stop light switch, 11"	1	1.15
50	950-1	Blackout tail lamp, left side, 12 volt	1	3.18
51	951-1	Blackout tail lamp, right side, 12 volt	1	3.16
52	SA-26992	Cable—Blackout stop light to terminal, 17'	1	1.30
54	SA-26991	Cable—Blackout tail light to terminal, 14'	1	1.15
55	5934	Junction block—4 pole—Douglas	1	.70
56	SA-27017	Cable—light switch to blackout stop light, 13"	1	.55
57	SA-27018	Cable—light switch to blackout tail light, 12"	1	.50
58	SA-27009	Cable—ammeter to circuit breaker, 6"	1	.05
59	5970	Switch—blackout lighting with circuit breaker	1	3.75
60	4785	Single plug—K.D. Lamp Co.	3	.18
61	4786	Double plug—K.D. Lamp Co.	1	.18
	SA-26996	Assembly — instrument panel includes SAB-26978 and items 8, 9, 10, 11, 19, 20, 22, 32, 34, 36, 37, 38, 39, 40, 41, 42, 44, 48, 49, 55, 56, 57, 58 and 59	1	28.50
	SAB-26978	Instrument panel only	1	4.65
	D-21920	Horn bracket	1	.30
	D-22005	Wood spacer for battery, ¾" x 5" x 12" lg.	1	.05
	D-22006	Wood spacer for battery, ⅜" x 5" x 12" lg.	1	.05
	D-22007	Wood spacer for battery, ¼" x 5" x 12" lg.	1	.05
	D-22399	Battery holding bolt	2	.20
	H-26949	Bracket—tail light	2	1.05
	R-11723	Clamp—wire	6	.05
	R-11760	Clamp—wire	5	.05
	R-19399	Clamp—wire	5	.05
	R-19400	Clamp—wire	3	.05
	G- 1107	Grommet, $\frac{5}{16}$"	2	.02
	G- 1223	Grommett, ⅞"	6	.02
	333-OD	Reflector—round amber lens, K.D. Lamp Co.	2	.65
	333-OD	Reflector—round red lens, K.D. Lamp Co.	4	.65
	7803	Loom—$\frac{9}{16}$" x 11' lg.	1	.55
		Loom—$\frac{5}{16}$" x 9" lg.	2	.04
		Capscrew—½" x ¾" lg. U.S.S.	4	4.70C
		Machine bolt—⅜" x 1¼" lg. U.S.S.	2	2.05C
		Machine screw—$\frac{3}{16}$" x 1" lg. U.S.S.	24	.50C
		Hex nut—$\frac{3}{16}$" U.S.S.	2	.50C
		Lockwasher—$\frac{3}{16}$"	24	.20C
		Lockwasher—⅜"	2	.35C
		Lockwasher—½"	4	.50C
		Drive screw No. 10 x ⅜" lg.	16	.52C

NOTE—Identification letters on wires are for identification of wires on Machine and are referred to on Plate attached to Instrument Panel.

990620 O—52——24

ELECTRICAL EQUIPMENT

Item No.	Part No.	Description	Quan.	Price
		The following hardware parts are used with SA-26996 instrument panel.		
		Machine screw—$\frac{3}{16}$" x $\frac{5}{16}$" lg.	4	.38C
		Lockwasher—shake proof, $\frac{3}{16}$"	4	.10C
		Machine screw—rd. hd. No. 6—32 x ½" lg.	4	.25C
		Nut—6-32 Hex	4	.40C
		Nut—10-32 Hex	2	.50C
		Flat washer, $\frac{3}{16}$"	2	.20C
		Lockwasher, $\frac{3}{16}$"	6	.20C

HEAD LIGHT

As used on Purchase Order PI-2364, P1-2967 and PI-3193

Blackout No. 971-1—12 Volt

Part No.	Description	Quan.	Weight Lbs.	Price Ea.
1247	Bulb—3 CP, 12 volt, single contact	1		$ .12
2897	Moulded rubber door gasket	1	.04545	.07
6797	Stainless steel Cts. screw	1	.00463	.04
7012	Solderless terminal	1	.00882	.01
8042	Door, lens, gasket and cleat	1	.5	1.40
8066	Body, bolt, wire, connector and rubber mounting pad	1	.5	.75

TAIL LIGHT

As used on Purchase Order PI-2364, P1-2967 and PI-3193

Blackout No. 950-1—12 Volt

2008	Outer cap for connector	1		.05
6205	Inner sleeve for connector	1		.03
3458	Rubber insert for connector S.C.	1		.05
3459	Rubber insert for connector D.C.	1		.05
2126	Contact plunger for connector	1		.07
8045	Assembly, body with connector tubes, bolts and inner pad clinched into one assembly	1	.75	.65
6798	Door screw—8x32 R.H. x 1" lg.	2	.00575	.04
2461	Door only	1	.36	.35
8039	Assembly—Service stop and tail lamp, upper unit, 12 volt	1		1.05
8040	Assembly—Blackout tail lamp, lower unit, 12 volt	1		1.05

TAIL LIGHT

As used on Purchase Order PI-2364, PI-2967 and PI-3193

Blackout No. 951-1—12 Volt

2008	Outer cap for connector	1		.05
6205	Inner sleeve for connector	1		.03
3458	Rubber insert for connector S.C.	1		.05
2126	Contact plunger for connector	1		.07
8045	Assembly, body with connector tubes, bolts and inner pad clinched into one assembly	1		.65
6798	Door screw—8x32 R.H. x 1" lg.	2	.00575	.04
2460	Door only	1	.36	.35
8040	Assembly, blackout tail lamp, lower unit, 12 volt	1		1.05
8041	Assembly—blackout stop lamp, upper unit, 12 volt	1		.95

SERVICE HEADLIGHT

As used on Purchase Order PI-2364, PI-2967 and PI-3193

No. 867 ORD—12 Volt

1124	Bulb 32—32 CP, 12 volt	1		.25
1967	Double contact connector	1	.02381	.30

SERVICE HEADLIGHT Continued
No. 867 ORD—12 Volt

Part No.	Description	Quan.	Weight Lbs.	Price Ea.
1126-7193	Connector with wire (tracer)	1		.12
1126-7186	Connector with wire (black)	1		.12
2858	Cork lens gasket	1	.01802	.30
4472	Clear lens	1		.45
5332	Yoke prop	1	.30	.12
6639	Round head screw	1	.005	.01
8021	Door complete with lug	1	.15	.65
8050	Reflector & ferrule	1	.30	.75
8051	Body, prop, pad and bolt	1	1.00	1.30

SPOTLIGHT

As used on Purchase Order PI-2364, PI-2967 and PI-3193

No. 486-B—12 Volt

1143	Bulb—S.C. 32 CP, 12 volt	1		.25
1964	Connector—brass	1	.35	.25
2378	Door—brass	1	.454	.85
2822	Cork gasket	1	.00154	.07
3401	Handle—brass	1	.125	.55
4242	Lens—glass	1		.40
5309	Prop or T bracket	1	.51	1.50
6153	Brass swivel	1	.16666	.40
6423	Switch	1	.03225	.55
6544	Brass bolt stud	1	.125	.35
6549	Steel nut—10-24 parkerized	2	.0033	.01
6560	Steel nut—½" hex	1	.075	.03
6675	Brass screw—1" x 10-32 R.H.	2	.00780	.03
6580	Acorn nut—$\frac{5}{16}$" with hole	1	.07142	.12
6586	Acorn nut—$\frac{5}{16}$"—24 without hole	1	.0625	.12
6726	Machine screw	1	.00635	.07
6755	Brass screw—⅜" x 10-24 R.H.	2	.00418	.01
6810	Steel washer—½"	1	.00674	.01
6879	Steel washer—$\frac{5}{16}$" lock	2	.00076	.005
6822	Steel washer—spring	4	.005	.03
7012	Solderless terminal	1	.00882	.01
7119	Wire	1	.06667	.10
7155	Lens retainer	4	.00133	.05
7186	Braided copper wire	1	.00463	.04
9166	Reflector and ferrule	1	.30	.80
9321	Body with door clips only	1	1.00	.65

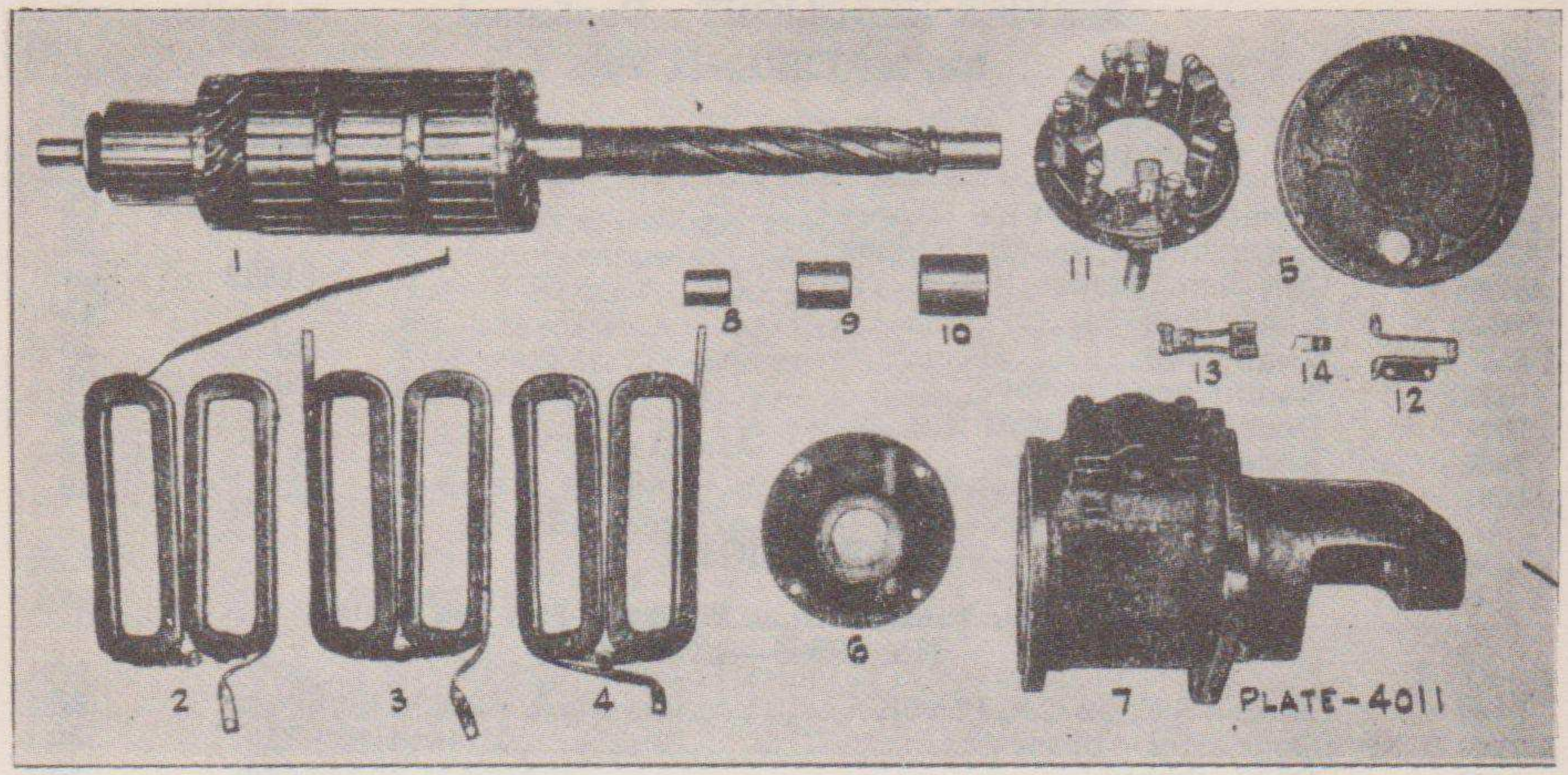

Fig. 2—Starting Motor.

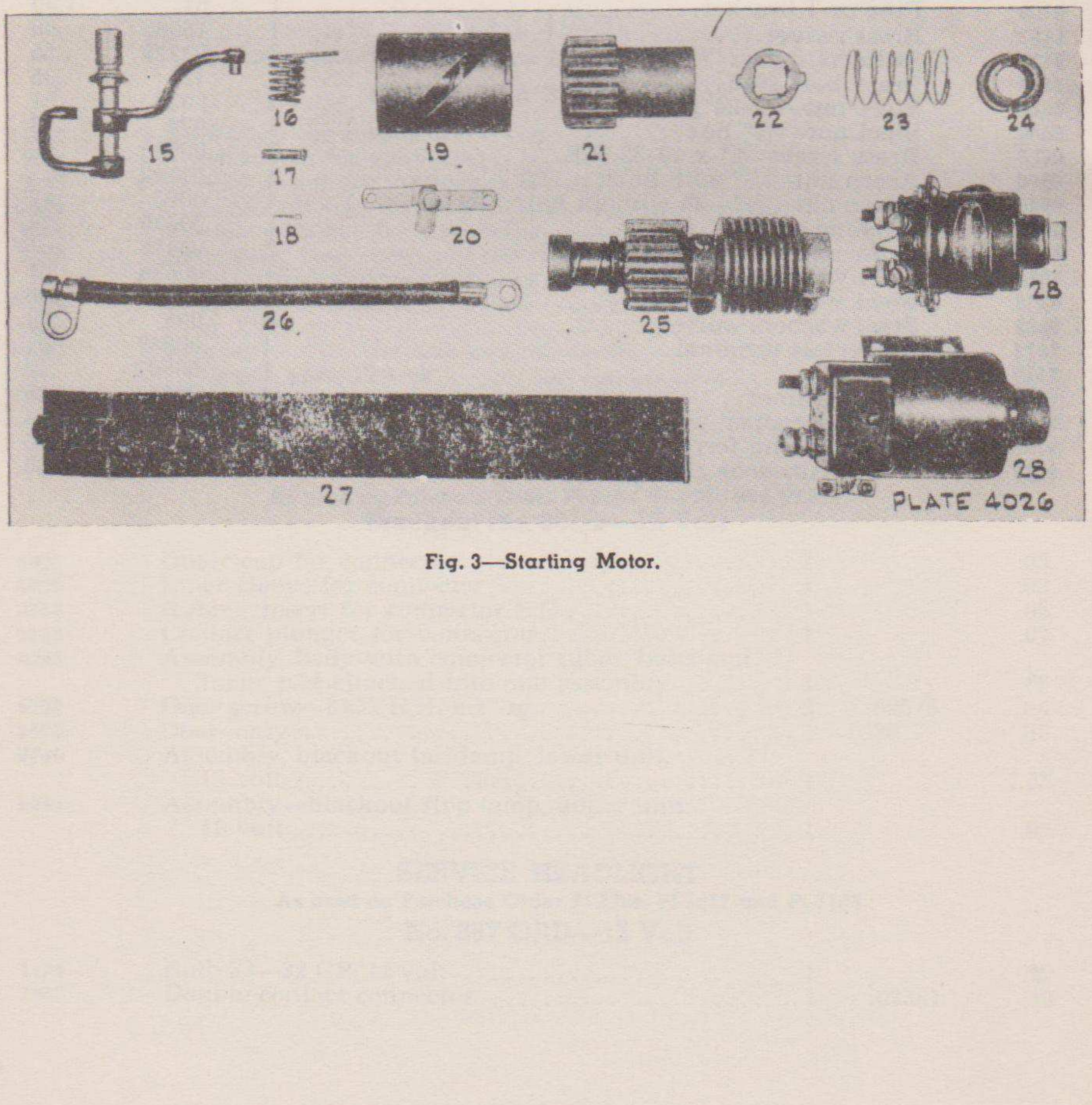

Fig. 3—Starting Motor.

PARTS LIST

STARTING MOTOR 12 Volt
Delco-Remy No. 1109108

See Figures 2 and 3

Item No.	Part No.	Description	No. Used	Price
1	1843657	Armature	1	$27.50
2	38345	Coil—Field—Left Hand	1	1.80
3	38345	Coil—Field—Lower	1	1.80
4	33347	Coil—Field—Right Hand	1	1.80
5	1843655	Frame—Commutator End	1	6.00
6	1841020	Plate—Center Bearing	1	4.00
7	1881680	Housing—Motor Drive	1	15.00
8	907502	Bearing or Bushing—C.E.	1	2.00
9	826462	Bushing—Drive Housing	1	.40
10	1839179	Bushing—Center Bearing	1	.75
13	38367	Brush	3	.40
14	34846	Spring—Brush	3	.10
25	1881585	Bendix—Motor Drive	1	13.50
27	1880355	Band—Commutator Cover	1	.65
	106496	Lockwasher—Brush Lead Wire		.01
	142848	Lockwasher—Center Bearing Attaching Screw		.03
	114604	Lockwasher—Center Bearing Attaching Screw		.01
	106497	Lockwasher — Commutator End Cover Plate Screw		.01
	114603	Lockwasher—Commutator End Frame Attaching Screw		.01
	114603	Lockwasher—Motor Drive Housing Attaching Screw		.01
	110730	Lockwasher—Terminal Stud		.01
	103088	Nut—Commutator Cover Band Screw		.05
	805258	Nut—Terminal Stud—$\frac{5}{32}$" Thick		.05
	134569	Nut—Terminal Stud—$\frac{1}{4}$" Thick		.05
	1881998	Screw—Brush Lead Attaching		.01
	113989	Screw—Center Bearing Attaching		.01
	1872866	Screw—Center Bearing Attaching		.10
	132929	Screw—Commutator Cover Band		.05
	135616	Screw—Commutator End Cover Plate		.01
	37872	Screw—Commutator End Frame Attaching		.05
	37872	Screw—Motor Drive Housing Attaching		.05
	828675	Screw—Pole Shoe		.05
	35728	Washer—Brush Holder Rivet—Bushing		.05
	1860389	Washer—Brush Holder Rivet—Insulation		.05
	24754	Washer—Brush Holder Rivet—Plain		.05
	1843662	Washer—Felt—Commutator End		.05
	809815	Washer—Space—Commutator End		.01
	1861076	Washer—Terminal Stud Insulation		.05
	809051	Washer—Terminal Stud Insulation		.01
	805790	Washer Terminal Stud—Plain		.05
	1835457	Gasket—Commutator End Cover Plate		.10
	1839418	Gasket—Center Bearing		.05
	33345	Insulation Strip—Field Coil		.05
	1880635	Oiler—In Field Frame		.05
	1880642	Oiler—C.E.		.05
	1880642	Oiler—D.E.		.25
	1839180	Tube—Oil—In Field Frame		.10
	802696	Oil Wick—D.E.		.05
	804076	Oil Wock—In Center Bearing		.15
	1843663	Plate—Commutator End Cover		.50
	36582	Shoe—Pole		.05
	1855434	Rivet—Brush Holder		.10
	826938	Stud—Field Terminal		.05
	124546	Key—Woodruff		

MAGNETIC SWITCH
Delco No. 1422—12 Volt
See Figure 9

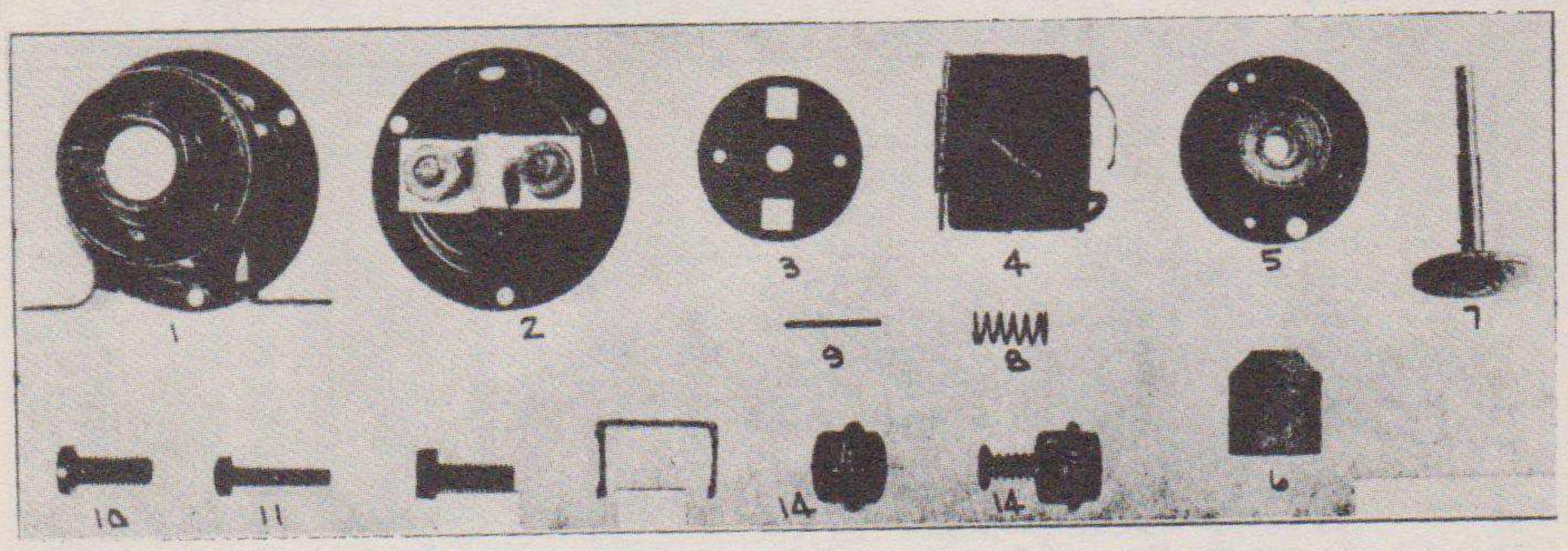

Fig. 9

Item No.	Part No.	Description	No. Used	Price
1	1843458	Case—Switch	1	$1.20
2	1869467	Base and Terminal	1	.70
3	1843465	Base Insulation	1	.10
4	1862901	Coil	1	2.50
5	1869463	Plunger Stop and Base	1	1.00
6	825228	Plunger Only	1	.65
7	1843456	Rod and Contact	1	.75
8	825227	Push Rod Spring	1	.05
9	825229	Push Rod Pin	1	.10
10	1843464	Stud—Motor Terminal	1	.10
11	822205	Stud—Coil Lead	1	.05
14	820657	Cover Plug	1	.15
	802731	Lockwasher—Base Attaching Screw		.01
	826498	Lockwasher—Coil Lead Stud Nut		.01
	142248	Lockwasher—Motor Terminal Stud Nut		.01
	115295	Nut—Base Attaching		.02
	120622	Nut—Coil Lead Terminal Stud		.02
	805258	Nut—Motor Terminal Stud—$\frac{5}{32}$" Thick		.05
	134569	Nut—Motor Terminal Stud—$\frac{1}{4}$" Thick		.05
	1866970	Screw—Base Attaching Screw		.01
	826319	Washer—Coil Lead Stud—Plain		.05
	1838591	Washer—Coil Lead Stud Insulating—Sq. Ins.		.05
	813731	Washer—Coil Lead Stud—Plain—Outside		.05
	805790	Washer—Motor Terminal Stud Plain		.01
	35832	Bushing—Coil Lead		.05
	816863	Bushing—Coil Lead Stud		.05
	1843466	Strip—Motor Terminal Insulating		.05
	811492	Strip—Motor Terminal Insulating—Bent		.05

BENDIX DRIVE No. 1881585
See Figure 4

Item No.	Part No.	Description	No. Used	Price
1	1881682	Gear and Shaft Assembly	1	10.50
2	37701	Spring—Drive	1	1.80
3	37700	Drive Head	1	$1.00
4	37702	Screw—Shaft Spring	1	.12
5	37703	Head Spring Bolt or Screw	1	.15
6	805057	Lockwasher	2	.01
7	37706	Back Stop	1	.40
8	37707	Screw—Back Stop	1	.10
9	1836330	Service Sleeve	1	.50

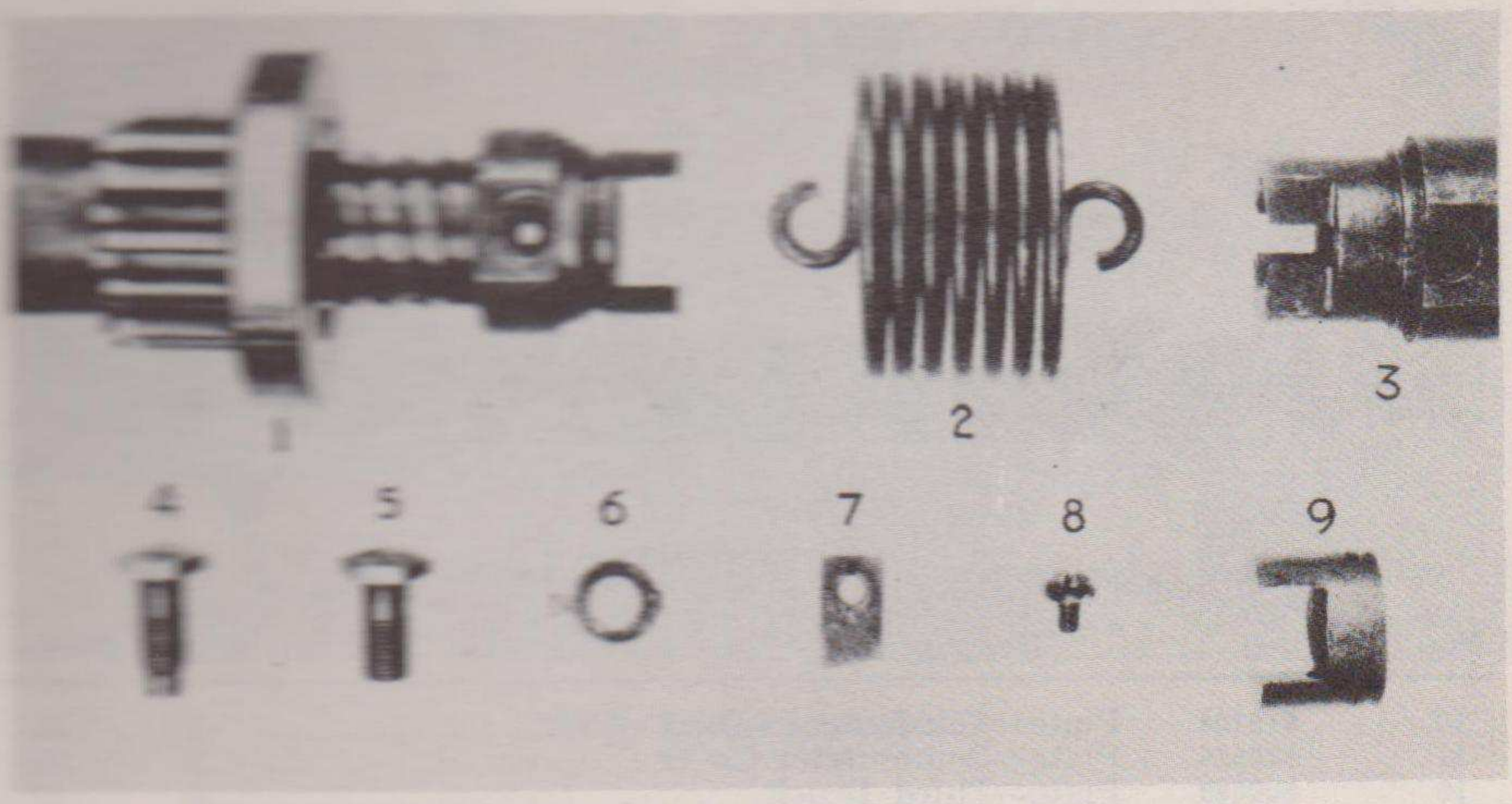

Fig. 4—Bendix Drive.

GENERATOR
Delco-Remy 12 Volt No. 1101726

Figures 5 and 6

Item No.	Part No.	Description	No. Used	Price
1	1878415	Armature	1	$8.50
2	1872244	Coil—Field R.H.	1	1.00
3	1878425	Coil—Field L.H.	1	.90
4	813496	Pole Shoe	2	.50
5	817216	Frame—Commutator End	1	1.25
6	1873830	Frame—Drive End	1	1.50
7	812823	Bushing or Bearing C.E.	1	.20
8	903203	Bushing or Bearing Drive End	1	2.30
9	1855702	Plate—Bearing Retainer D.E.	1	.10

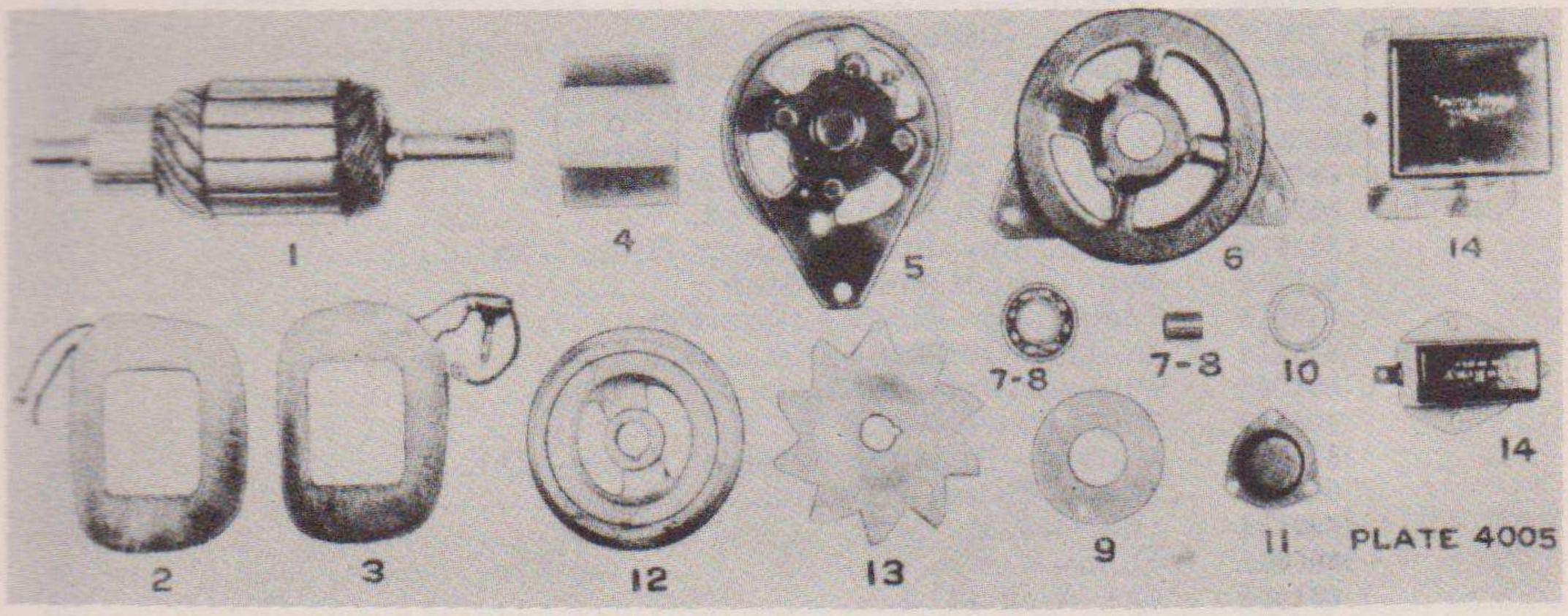

Fig. 5—Generator

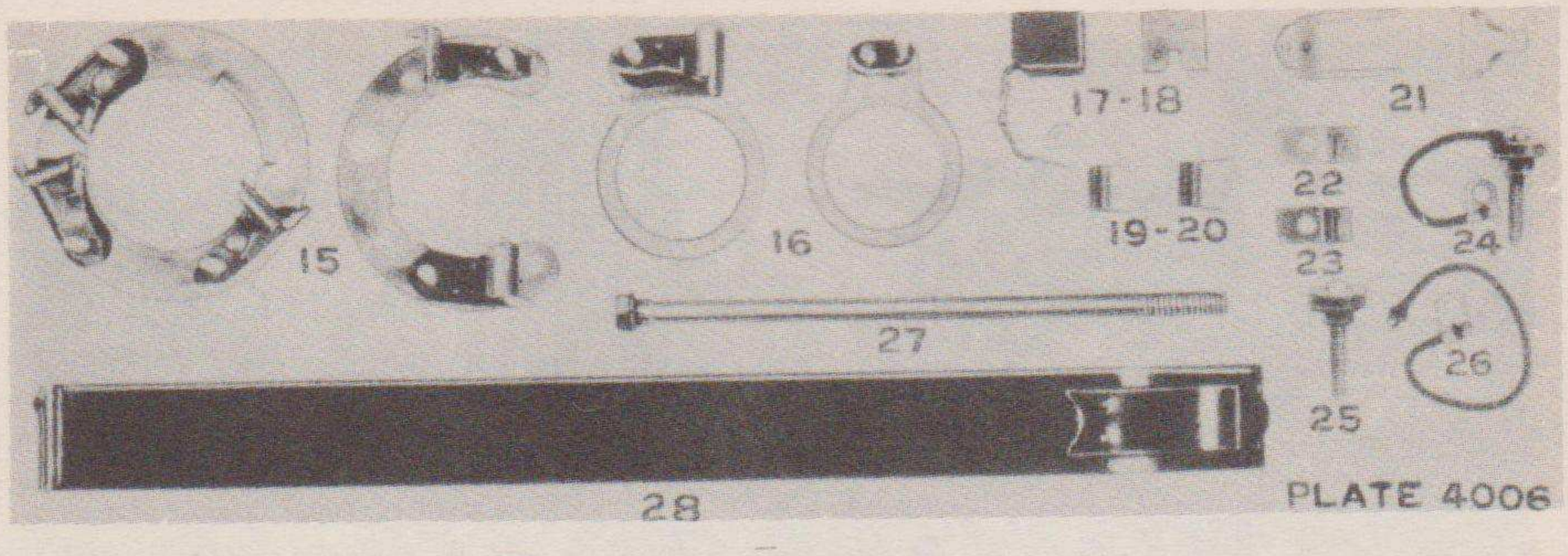

Fig. 6—Generator

Item No.	*Part No.*	*Description*	*No. Used*	*Price*
10	819104	Plate—Felt Retainer D.E.	1	.05
11	820524	Plate—Commutator Cover	1	.05
16	809698	Plate—Third Brush	1	.30
17	809637	Brush—Main	2	.10
18	809637	Brush—Third	1	.10
19	809658	Spring—Main Brush	2	.05
20	809644	Spring—Third Brush	1	.05
21	809642	Holder—Brush	2	.10
22	817532	Clamp—Third Brush Plate	1	.05
24	1858754	Terminal Stud and Lead	1	.15
25	1858749	Terminal Stud only	1	.10
27	815018	Bolt—Thru		.10
28	1872638	Band—Commutator Cover	1	.50
	802731	Lockwasher—Bearing Retainer Plate		.01
	802730	Lockwasher—Brush Lead Attaching		.01
	106495	Lockwasher—Brush Attaching Screw		.01
	802757	Lockwasher—Terminal Stud Nut		.01
	106497	Lockwasher—Third Brush Plate Clamp		.01
	108579	Lockwasher—Thru Bolt		.01
	103047	Nut—Shaft D.E.		.05
	1843522	Nut—Terminal Stud		.05
	1866970	Screw—Ball Bearing Retainer Plate		.01
	1862803	Screw—Brush Attaching		.01
	107728	Screw—Cover Band		.05
	828675	Screw—Pole Shoe		.05
	141543	Screw—Third Brush Plate Clamp		.05
	809551	Washer—Brush Attaching Screw		.05
	809961	Washer—Felt—D.E.		.05
	30205	Washer—Shaft Nut		.05
	809945	Washer—Space—Inside—D.E.		.05
	1858753	Washer—Terminal Stud Insulation		.02
	1858752	Washer—Terminal Stud—Plain		.01
	809824	Washer—Third Brush Plate Spring		.05
	817313	Pin—Brush Holder Hinge		.05
	812016	Insulation—Brush Holder Hinge Pin		.10
	817314	Pin—Brush Holder Stop		.05
	812015	Insulation—Holder Stop Pin		.10
	817224	Collar—Outside—D.E.		.10
	809062	Pin—Dowel—C.E.		.05
	809593	Pin—Dowel—D.E.		.05
	1855701	Gasket—Bearing Retainer Plate—D.E.		.05
	809688	Lead—Brush Ground		.10
	1880635	Oiler—C.E.		.05
	1880641	Oiler—D.E.		.05
	804076	Oil Wick—C.E.		.05
	809614	Pin—Third Brush Spring Washer		.05
	816315	Plug—Oil Hole—C.E.		.05
	1857107	Clip—Terminal Brush and Ground		.01
	124545	Key—Woodruff D.E.		.05

VOLTAGE REGULATOR OR CONTROL UNIT

Delco-Remy 005884

See Figure 8

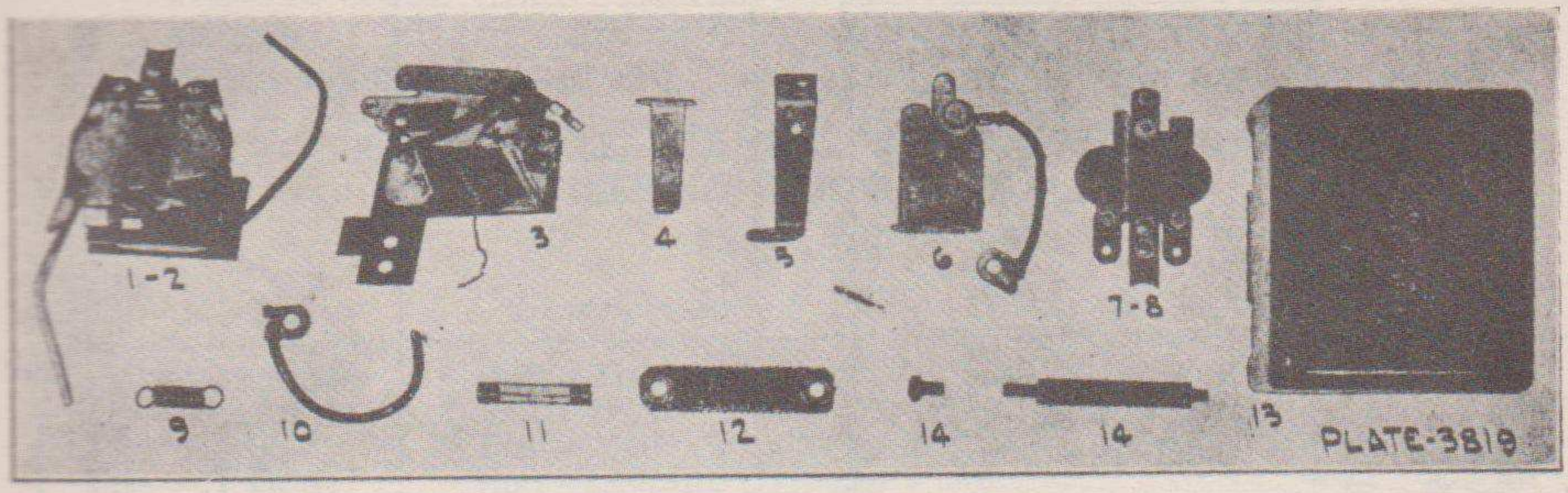

Fig. 8—Voltage Regulator.

Item No.	*Part No.*	*Description*	*No. Used*	*Price*
8	1860809	Armature—Regulator		$ .45
9	1855733	Spring—Armature		.05
10	1859967	Lead—Armature		.10
12	1874143	Resistance		.10
13	1865603	Cover		.20
14	1865614	Stud—Cover		.05
	804485	Lockwasher—Cover Attaching		.01
	20793	Lockwasher—Regulator Armature Attaching		.01
	106495	Lockwasher—Relay Armature Attaching Screw		.01
	106495	Lockwasher—Resistance Attaching Screw		.01
	802729	Lockwasher—Terminal Screw		.01
	140630	Lockwasher—Regulator Armature Attaching		.01
	1853901	Screw—Regulator Armature Attaching		.01
	141542	Screw—Relay Armature Attaching		.02
	1865614	Screw—Cover		.05
	141542	Screw—Resistance Attaching		.02
	1881998	Screw—Terminal		.01
	1865616	Washer—Insulating—Cover Screw		.01
	814627	Washer—Regulator Armature Screw (plain)		.01
	813157	Washer—Relay Attaching Armature—Inner		.01
	1856614	Washer—Relay Armature Attaching—Outer		.02
	5014690	Seal—Cover		.02

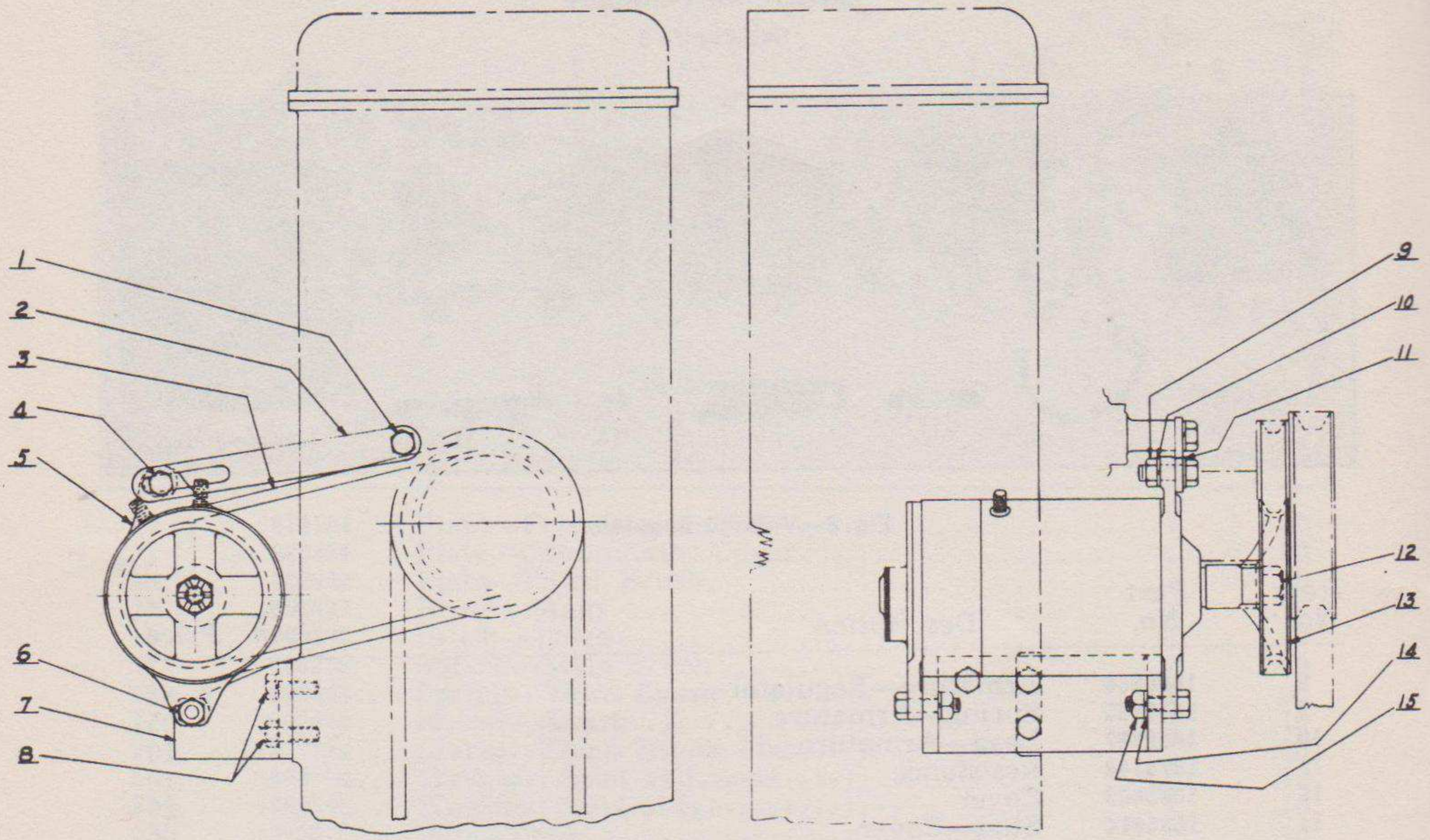

Fig. 7—Generator Drive

GENERATOR DRIVE

See Figure 7

Item No.	Part No.	Description	No. Used	Price
1	50893-D	Stud—Generator Brace I.H.C.	1	$ .70
2	50892-DA	Brace—Generator I.H.C.	1	.17
3	54857-DA	Belt—Generator Drive I.H.C.	1	.95
4		Capscrew—$\frac{5}{16}$" x $\frac{3}{4}$" U.S.S.	1	1.70C
5	51602-D	Generator—Delco No. 1101726	1	22.50
6		Capscrew—$\frac{5}{16}$" x $1\frac{1}{4}$" U.S.S.	1	2.10C
7	50891-D	Bracket—Generator I.H.C.	1	1.45
8		Capscrew—$\frac{7}{16}$" x 1" U.S.S.	1	3.20C
9		Nut—$\frac{5}{16}$" Hex. U.S.S.	1	.75C
10		Lockwasher—$\frac{5}{16}$"	1	.25C
11		Flatwasher—$\frac{1}{2}$"	1	.50C
12		Nut—$\frac{1}{2}$" S.A.E. Slotted	1	3.10C
13	8081-D	Pulley—Generator I.H.C.	1	1.35
14		Lockwasher—$\frac{5}{16}$" Std.	1	.25C
15		Nut—$\frac{5}{16}$" U.S.S. Std.	1	.75C

INDEX

BEARINGS 5
FRONT AXLE ..... 1 & 2
LEANING WHEEL PARTS ..... 1 & 2
STEERING PARTS 8
WHEELS 5
WHEEL SPINDLES 5

FRONT AXLE, LEANING WHEEL PARTS AND STEERING PARTS AT AXLE

Figures 1, 2, 3

Item No.	Part No.	Description	Wt. Lbs.	Req.	Price
1	H-20195	* Bolt—Tilting Bar	1½	2	4.00
2	D-6223	* Nut 1" SAE Slotted	¼	2	.20
3		* Pin—Cotter ⅛" x 2" lg.		2	.25C
4	D-20211	Rod—Leaning Cylinder Piston	7	1	2.95
5	B-20207	* Bar—Wheel Tilting—Rear	25	1	4.85
6	SAB-20206	* Bar—Wheel Tilting—Front	26	1	4.85
7		* Lubricator—Alemite		2	.15
8	SA-20666	* Rod—Steering	12	1	3.50
9		* Nut—1¼" Hex. Jam SAE	¼	1	19.00C
10	H-20190	* Fork—Steering Rod—Inner	2½	1	2.00
11		* Lubricator—Alemite		2	.15
12	D-9295	* Pin for Steering Conn.	¼	1	.25
13	D-9295	* Pin for Steering Conn.	¼	1	.25
14		* Lubricator—Alemite		2	.15
15	H-20204	Arm—Steering	6	1	9.75
16	H-20192	* Connection—Steering Arm	3	1	4.25
17	D-9295	* Pin for Steering Conn.	½	1	.25
18		* Lubricator—Alemite		2	.15
19	H-20190	* Fork—Steering Rod—Inner	2½	1	2.00

Prices subject to change without notice

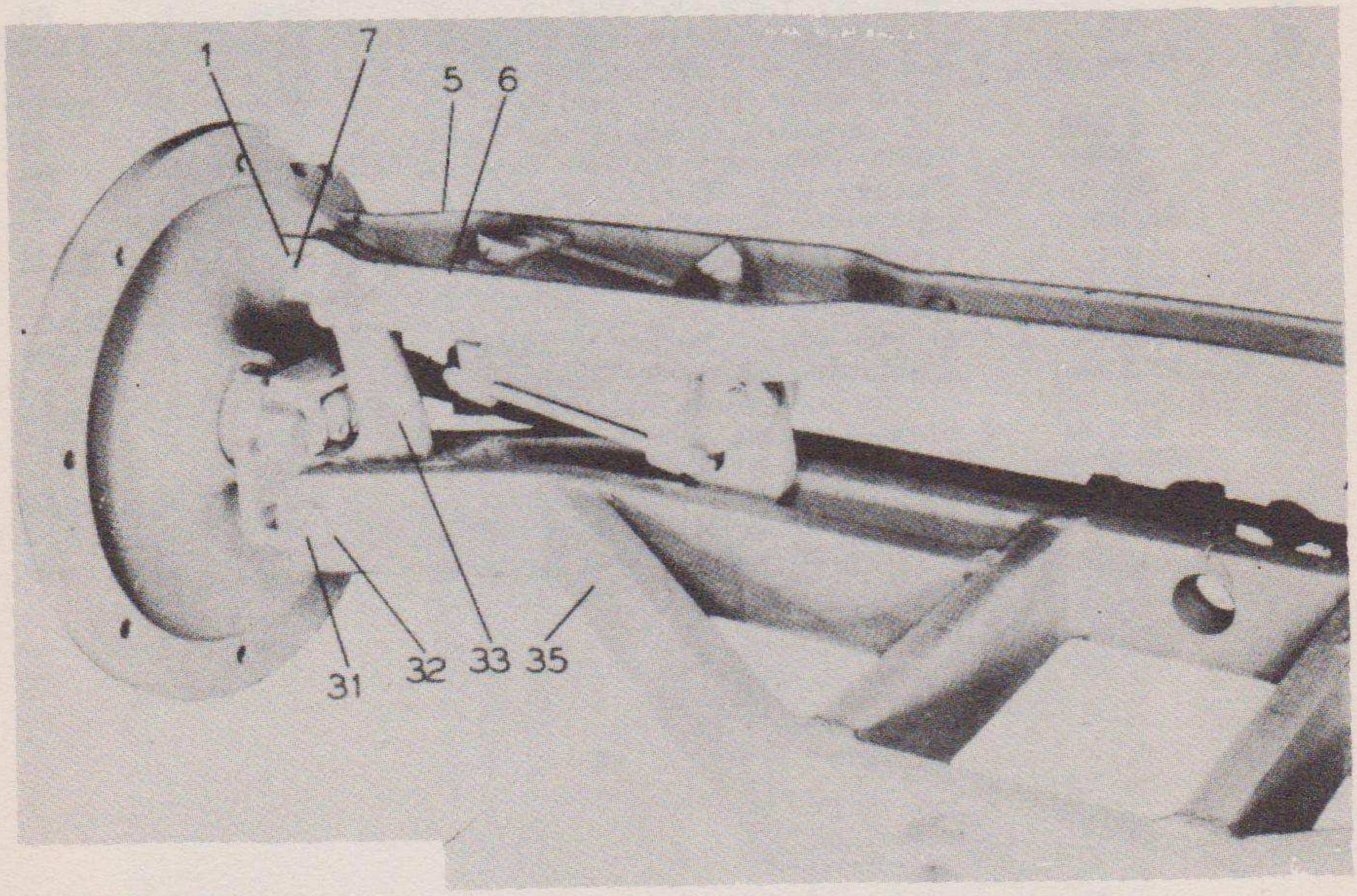

Fig. 1—Front Axle

PARTS LIST

Item No.	Part No.	Description	Wt. Lbs.	Req.	Price
20		* Nut—1¼" Hex. Jam—SAE	¼	1	$19.00C
21	SA-20666	* Rod—Steering	12	1	3.50
22		* Pin—Cotter—$\frac{3}{16}$" x 2" lg.		2	.50C
23		* Lubricator—Alemite		2	.15
24	D-9295	* Pin for Steering Conn.	¼	2	.25
25	D-20189	* Fork—Steering Knuckle Arm	2	2	3.60
26		* Lubricator—Alemite		2	.15
27	D-9295	* Pin for Steering Conn.	¼	2	.25
28	D-25060	* Bushing—Steering Knuckle Arm		4	.15
29	SA-23712	* Assembly — Steering Knuckle and Arm L. H. as shown	28¼	1	29.25
30	D-4357	* Nut—1½" SAE Slotted	1	2	1.05
31		* Lubricator—Alemite		2	.15
32	H-20194	* Bolt—Leaning Spindle	3¼	1	3.35
33	SA-20675	* Assembly—Leaning Wheel Arm and Bushing consisting of the following:	24	1	16.30
		B-20188 Arm—Spindle		1	NSS
		D-20198 Bushing		2	.30
		D-20199 Bushing		1	.75
34		* Pin—Cotter—¼" x 3" lg.		1	1.10C
35	SAB-20215	* Assembly—Front Axle (Welded)	235	1	76.50
36		* Pin—Cotter—$\frac{3}{16}$" x 1½"		1	.40C
37	D-5579	* Pin—Cylinder Hinge	½	1	.50
38	D-20201	Pin—Front Axle	19	1	2.75
39		Bolt—½" x 5" lg. Sq. Hd. U.S.S.	¼	1	6.40C
40		Lock Washer—½" Std.		1	.50C
41		Nut—½" Std.		1	2.20C
42	D-4357	* Nut—1½" Hex Hd. SAE Slotted	1	1	1.05
43	SA-20675	* Assembly—Leaning Wheel Arm and Bushing consisting of the following:	24½	1	16.30
		D-20188 Spindle—Arm		1	NSS
		D-20198 Bushing		2	.30
		D-20199 Bushing		1	.75
45	H-20194	* Bolt—Leaning Spindle	3¼	1	3.35
46		* Lubricator—Alemite		1	.15
47		* Bolt—Sq. Hd.—1¼" x 4" lg.	2¼	1	.60
48		* Lock Washer—1¼" Std.	⅛	1	12.50C
49	SA-23711	* Assembly — Steering Knuckle and Arm R.H.	28¼	1	29.25
	D-9105	* Pin—Steering Knuckle Pivot Lock	¼	2	.45
	D-9296	* Pivot—Steering Knuckle—IHC-4505-D	3	2	.95
	D-930	* Washer—IHC-630-D	¼	2	.55
	SA-2067	* Assembly—Leaning Wheel Cylinder —refer to Hydraulic System for parts		1	33.75
	SA-20676	Assembly—Front Axle includes all parts marked *		1	291.00
	D-21662	* Elbow—Male—Parker 10CCXX	½	1	2.00
	SA-21666	Assembly—Hose for Leaning Wheel —refer to Hydraulic System for parts		2	8.85
	D-22761	* Stop—Leaning Wheel Bar	4½	1	.55
	SA-22975	Tubing—Short—Leaning Wheel 11' 10" lg.	4	1	6.50
	SA-22976	Tubing—Long—Leaning Wheel 12' lg.	4	1	6.50
		* Ell—45° St.—Extra Heavy—½"		1	.55

Prices subject to change without notice

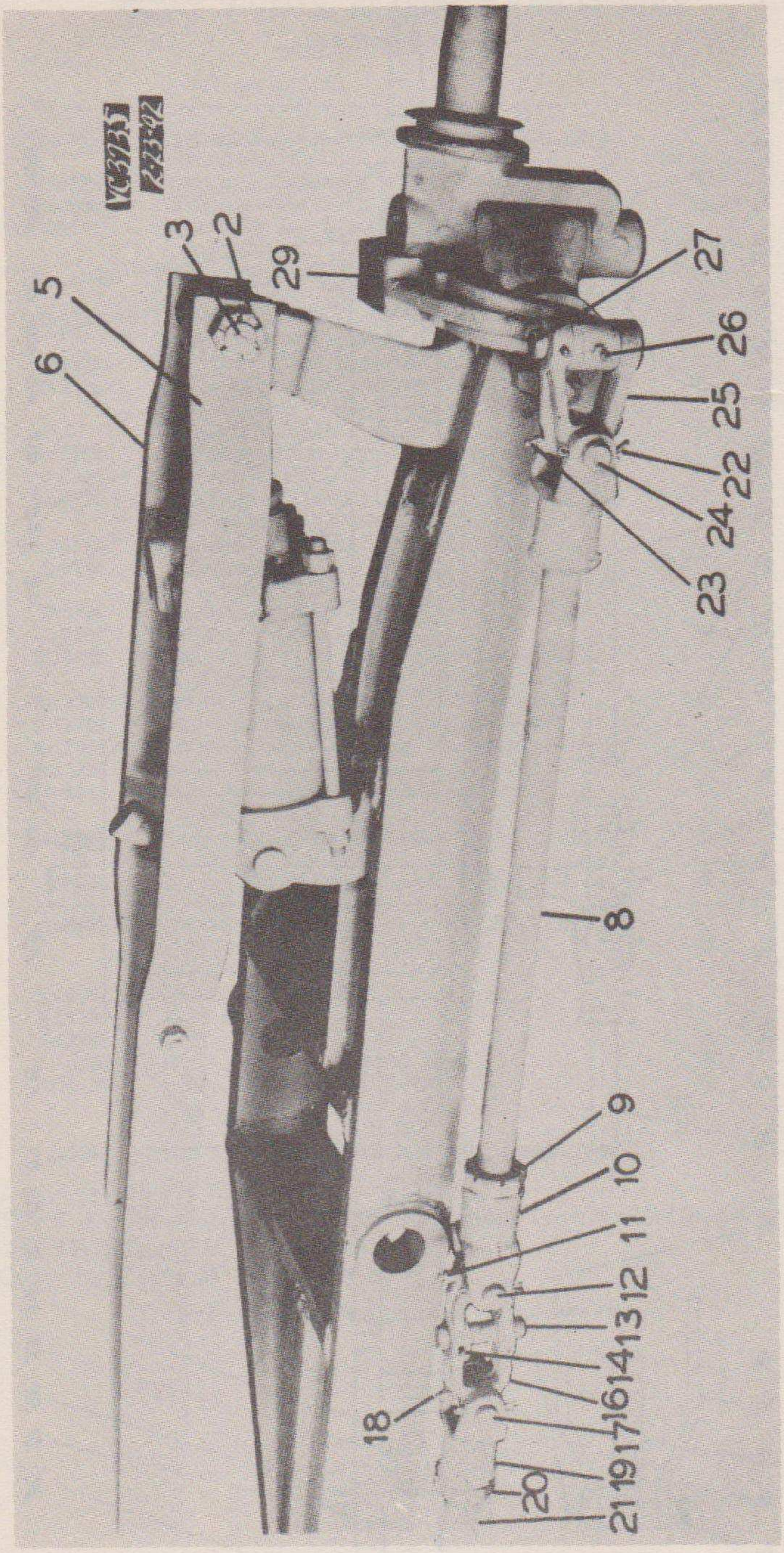

Fig. 2—Steering Parts on Front Axle

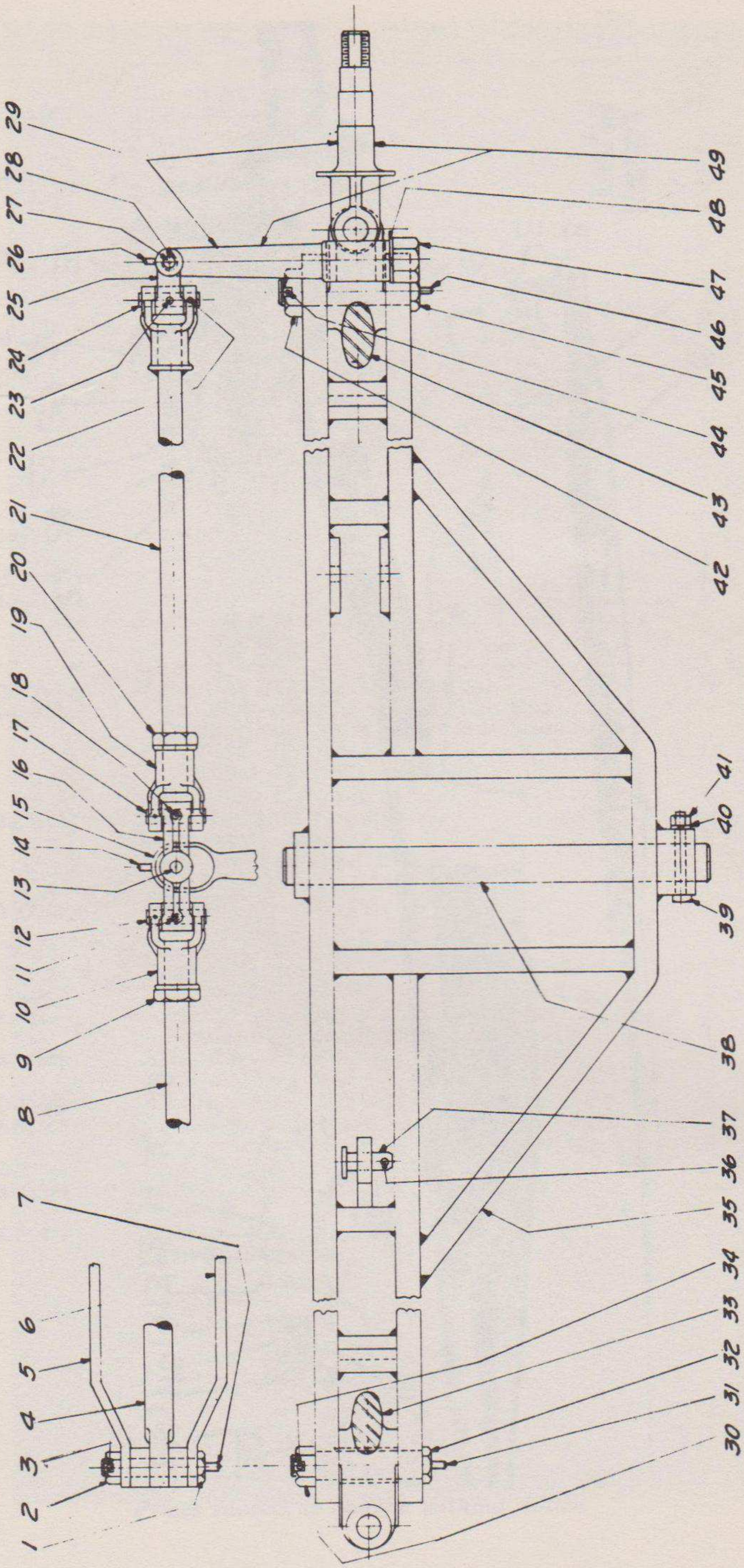

Fig. 3—Front Axle

FRONT WHEELS, BEARINGS AND SPINDLE

See Figures 4, 5, 6

Item No.	*Part No.*	*Description*	*Wt. Lbs.*	*Req.*	*Price*
1	SA-20675	Assembly — Leaning Wheel Arm and Bushing	24½	2	$16.30
2	D-20198	Bushing—Leaning Wheel Arm	¼	2	.30
3	D-25060	Bushing—Steering Knuckle Arm	¼	4	.15
4	SA-23711	Assembly — Steering Knuckle, R.H., Complete	28¼	1	29.25
5		Bolt—1¼" x 4" U.S.S. Mach., Sw. Hd.	2¼	2	.60
6		Lock Washer—1¼"	⅛	2	12.50C
7	D-9296	Pin—Pivot (IHC-4514-D)	3	2	.95
8		Lubricator—Alemite		2	.15
9	D-26477	Bushing—Steering Knuckle	⅛	4	.75
10	D-9105	Pin—Steering Knuckle Pivot	¼	2	.45
11		Lock Washer—½"		2	.50C
12		Nut—½" U.S.S. Hex	⅛	2	2.20C
13	D-20199	Bushing—Leaning Wheel Arm	1	2	.75
14	D-9395	Washer—(IHC-630-D)	¼	2	.55
15	D-26477	Bushing—Steering Knuckle Pivot Pin		4	.75
16		Lubricator—Alemite		2	.15
17	SA-23712	Assembly — Steering Knuckle, L.H.,			
18	D-9235	Complete	28¼	1	29.25
		Retainer—Felt Washer (IHC-11231-D)	⅛	2	.15
19	D-9236	Washer—Felt (IHC-4492-D)		2	.35
20	D-9234	Retainer—Washer	⅛	2	.20
21	R-10792	Cup—Inner Bearing (Timken-5320)	1½	2	3.20
22		Lubricator—Alemite		2	.15
23	R-12057	Cone—Inner Bearing (Timken-5358)	2½	2	4.75
24	R-10791	Cup—Outer Bearing (Timken-432)	1	2	2.00
25	R-12058	Cone—Outer Bearing (Timken-447)	1½	2	2.70
26	R-10783	Cap—Front Wheel	1	2	1.00
27	D-9240	Nut—Steering Knuckle Lock (IHC-11233-D)	⅛	2	.45
28	D-9239	Lock—Steering Knuckle Nut (IHC-11237-D)	⅛	2	.20
29	D-9238	Lock—Steering Knuckle Adj. (IHC-11236-D)	⅛	2	.20
30	D-9237	Nut—Steering Knuckle (IHC-11235-DX)	¼	2	.75
31		Cap Screw—$\frac{7}{16}$" x ¾" U.S.S.	⅛	6	3.00C
32		Lock Washer—$\frac{7}{16}$"		6	.40C
33	R-10785	Gasket—Hub Cap		2	.10
34	B-22643	Wheel—Front	185	2	24.75
35	R-10788	Clamp—Rim CP-45	½	16	.20
36	R-10790	Nut—⅝" Rim Clamp Hex	⅛	16	.05
37	R-10789	Bolt—Rim Lug BT-45	¼	16	.10
38		Rim—Type R.I.—6" x 24"	28	2	7.50
39		Side Ring—Type R.I.	16	2	NSS
	D-9241	Pin—Steering Knuckle Adj. Lock		2	.02

Tires—7:00 x 24—10 Ply Rib Type.
Rims—Tire 7:00 x 24—Size 6" type F. B.—Firestone type R. I.—Goodyear type K-28.
Valve—No. TR75 Type SB. 3" long bent 17°.
Tube—Order for 7:00 x 24" tire heavy duty.

Prices subject to change without notice

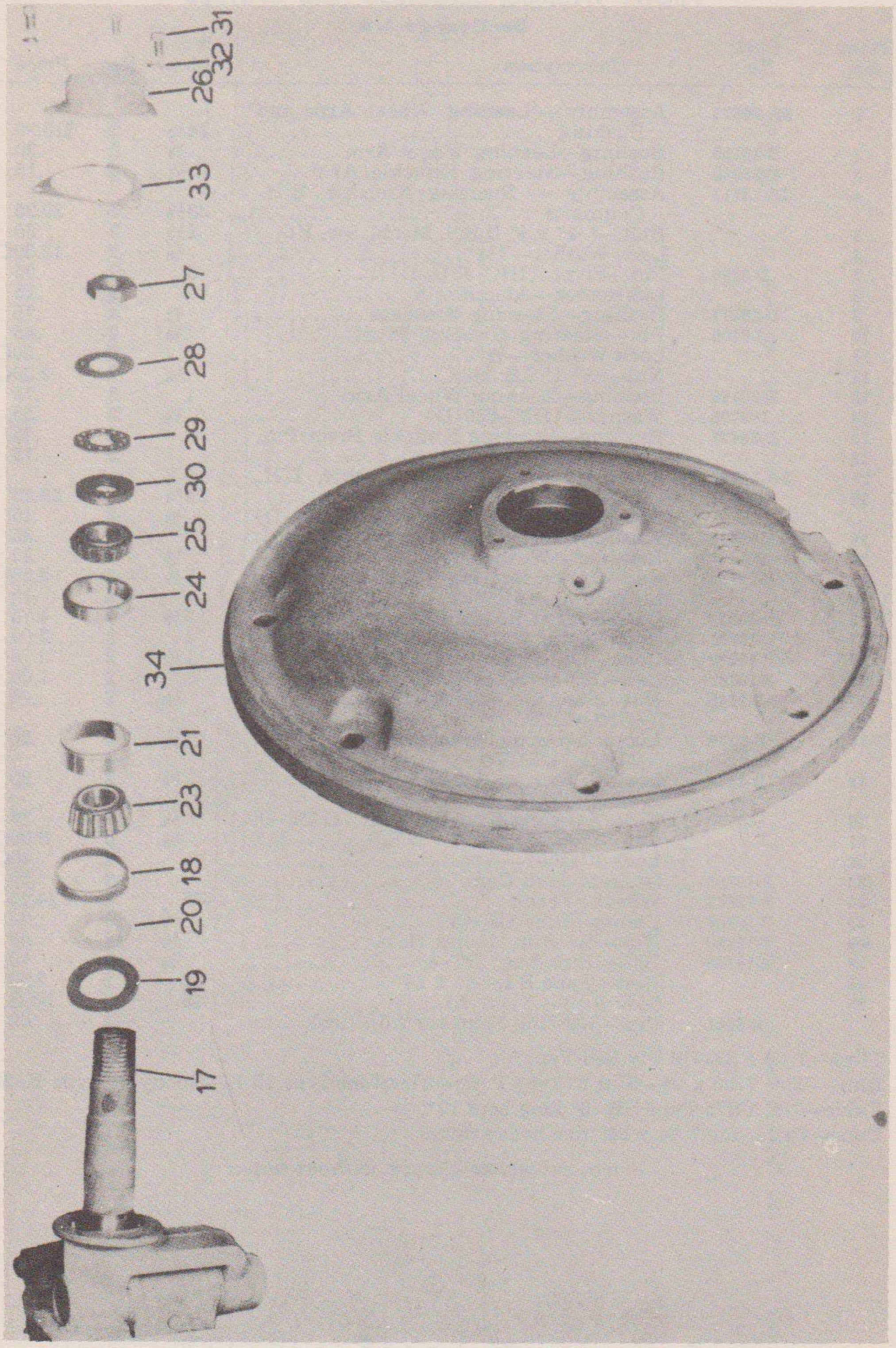

Fig. 4—Front Wheel and Bearings

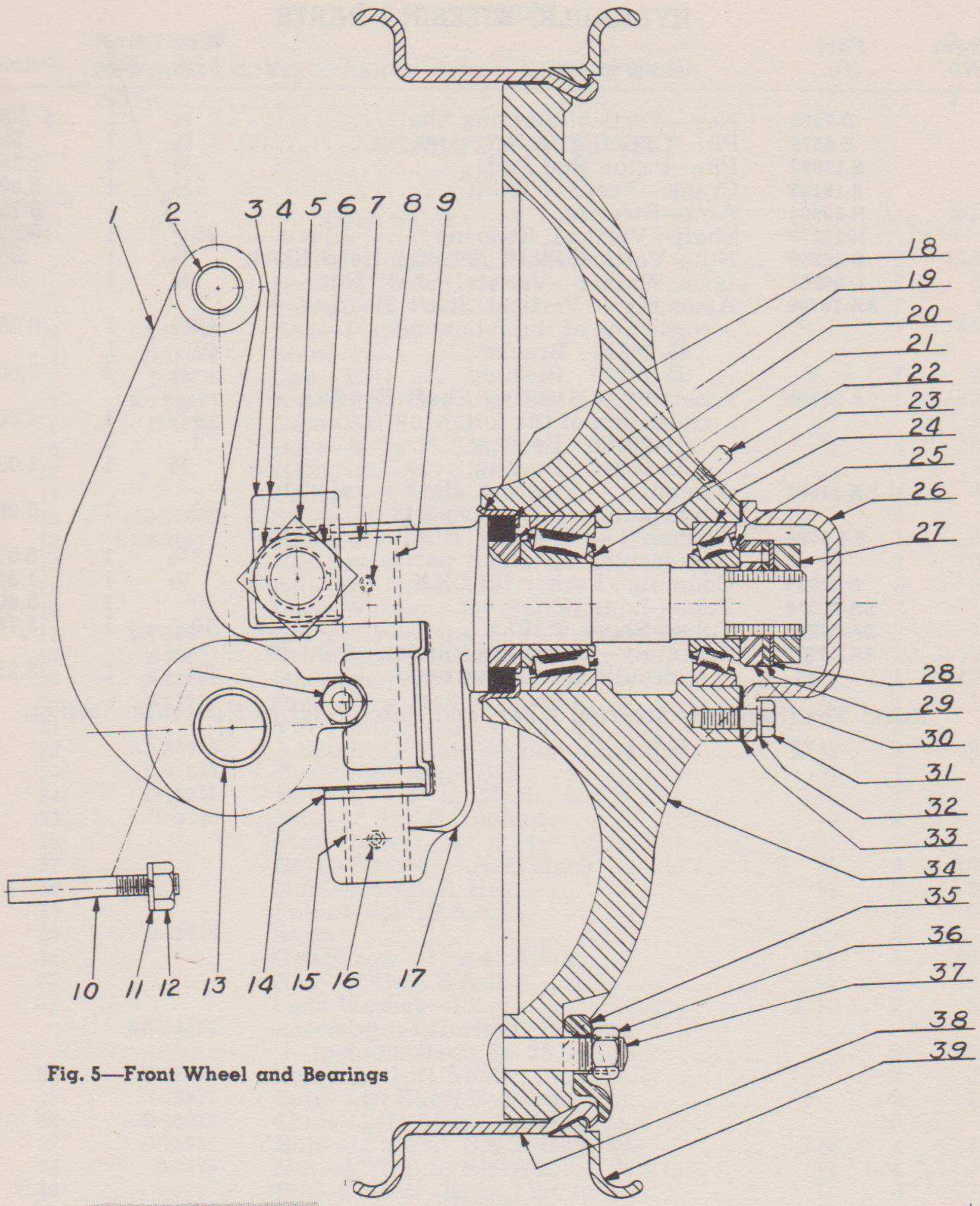

Fig. 5—Front Wheel and Bearings

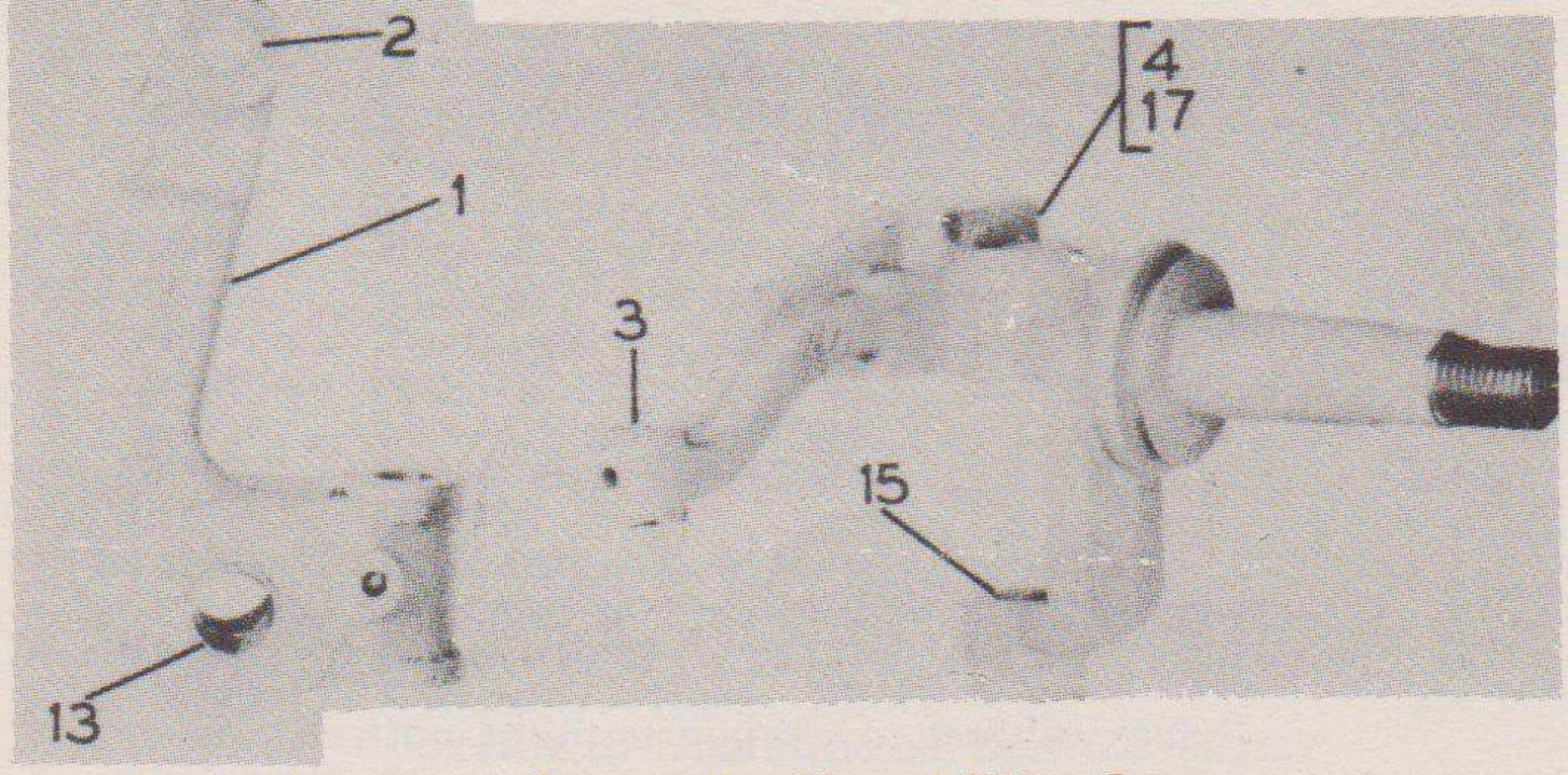

Fig. 6—Steering Knuckle and Tilting Arm

990620 O—52——25

HYDRAULIC STEERING PARTS

Item No.	Part No.	Description	Wt. Lbs.	Req.	Price
	D-2983	Key—Vertical Steering Shaft	1/6	1	$ .25
	D-5579	Pin—Cylinder Connection	½	1	.50
	R-12093	Pin—Piston Rod End	½	1	1.35
	B-19185	Crank—Vertical Shaft	7½	1	5.90
	H-20204	Arm—Steering	6	1	9.75
	H-20218	Shaft—Vertical Steering	26	1	15.25
	D-20250	Nut—Vertical Shaft Through Head Block	½	1	.30
	D-20251	Lock Washer—Vertical Shaft Nut	⅛	1	.10
	SA-20788	Assembly — Vertical Shaft Bearing — consisting of the following:	13½	1	8.25
		B-20216 Bracket	13	1	
		D-20249 Bushing	½	2	1.00
	SA-20789	Assembly — Steering Shaft Bearing — consisting of the following:	4½	1	4.00
		H-20186 Bearing	4	1	
		D-20249 Bushing	½	1	1.00
	SA-21663	Assembly — Steering Hose — refer to hydraulic section for parts	3	1	5.00
	SA-7786	Assembly — Steering Hose — refer to hydraulic section for parts	3½	1	5.00
	D-21665	Coupling (Parker 10CCXX)	⅓	1	1.35
	SA-22970	Tube—Long 10′	10	1	5.80
	SA-22974	Tube—Short 9′ 10″	10	1	5.75
	SA-23264	Assembly—Steering Cylinder—refer to hydraulic section for parts	39	1	33.25

NOTE: *For Hydraulic Steering Wheel and Valve refer to Hydraulic Section.*

Prices subject to change without notice

PARTS LIST

INDEX

HANG RODS 1
HYDRAULIC CONTROL PARTS—Refer to Hydraulic Section
TEETH 1

SCARIFIER ASSEMBLY

See Figure 1

Item No.	Part No.	Description	Wt. Lbs.	Req.	Price
1		Bolt—¾" x 3" S.A.E. Mach.	½	2	$10.75C
2		Nut—¾" S.A.E. Hex.	⅕	2	5.00C
3		Palnut—¾" S.A.E.		2	3.00C
4	SA-20889	Rod—Piston	21	1	$8.15
5	D-12699	Shim		4	.10
6	D-432-S	Cap—Ball	2	1	2.00
7	SA-20874	Assembly—Scarifier Lift Shaft	155	1	42.00
8	D-432-S	Cap—Ball	2	2	2.00
9		Bolt—¾" x 3" S.A.E. Mach.	½	4	10.75C
10		Hex. Nut—¾" S.A.E.	⅕	4	5.00C
11		Palnut—¾" S.A.E.		4	3.00C
12	D-12699	Shim—Ball Cap		8	.10
13	SAB-20871	Assembly—Scarifier Bearing Bracket		1	20.20
14		Cap Screw—¾" x 2¼" S.A.E.	½	8	10.20C
15		Nut—¾" S.A.E. Hex.	⅕	8	5.00C
16		Lock Washer—¾" Standard		8	1.70C
17	SA-20870	Assembly—Hang Rod—Female Section	24½	2	7.95
18	B-20872	Drawbar—Scarifier—R. H.	113	1	17.00
19	B-20873	Drawbar—Scarifier—L. H.	113	1	17.00
20	D-21758	Pin—Hang Rod Adjusting	¾	2	1.10
21		Pin--Cotter—¼" x 1½" lg.		2	.65C
22	SA-20890	Assembly—Male Section Hang Rod	27½	2	8.50
23	D-21893	Bushing—Hinge Bolt	⅛	4	.15
24	D-16756	Bolt—1" x 5" lg. Mach., U.S.S.	1⅓	2	.35
25	D-3295	Nut—1" U.S.S. Slotted	⅓	2	.15
26		Pin—Cotter—¼" x 1½" lg.		2	.65C
27		Bolt—¾" x 3" S.A.E. Mach.	½	4	10.75C
28		Nut—¾" S.A.E. Hex.	⅕	4	5.00C
29		Palnut—¾" S.A.E.		4	3.00C
30	D-12699	Shim		4	.10
31		Cap Screw—1" x 4" S.A.E.	1⅕	2	55.00C
32		Nut—1" Hex. S.A.E.	⅓	2	10.20C
33		Lock Washer—1"	1/12	2	5.25C
	SA-13375	Assembly—Lift Shaft Bearing Includes items 34, 35 and 36		2	13.85
34	H-12848	Bearing—Lift Shaft	7	2	3.70
35	H-12831	Cap—Lift Shaft Bearing	5	2	2.45
36	D-13022	Shim—Lift Shaft Bearing		16	.05
37	D-13356	Bolt—1" x 6¾" U.S.S. Hex Hd.	1¾	4	1.05
38	D-3295	Nut—1" U.S.S. Slotted	⅓	4	.15
39		Pin—Cotter—¼" x 1½" lg.		4	.65C
40	D-12830	Bushing—Lift Shaft Bearing	2¼	2	2.65
41	D-4035	Nut—1½" U.S.S. Slotted Hex	1⅕	2	.45
42	D-16287	Bushing—Drawbar	¼	2	.20
43	D-20853	Rod—Scarifier Drawbar	10	1	2.10
44		Pin—Cotter—¼" x 3" lg.		2	1.10C
45	D-432-S	Cap—Ball	2	2	2.00
46	SAD-23096	Key—Scarifier Tooth	1¼	11	.50
47	SAB-23104	Assembly—Scarifier Block	400	1	81.00
48	H-20867	Tooth—Scarifier	15½	11	2.40
	D-7220	Nut—Tube	⅛	2	.70
	D-7259	Pin—Cylinder Hinge	1	1	.50
	D-7278	Stud—Ball (Welded)	3⅓	5	1.70
	R-11700	Plug	¼	2	1.00
	SA-20888	Assembly—Scarifier Cylinder (refer to hydraulic section for parts)		1	54.50
	D-21662	Elbow—Male	½	2	2.00
	SA-21669	Assembly—Hose—Short (refer to hydraulic section for parts)	3	1	5.85
	D-20852	Connection—Cylinder		1	1.50

PARTS LIST

Item No.	Part No.	Description	Wt. Lbs.	Req.	Price
	SA-21670	Assembly—Hose—Long ..... (refer to hydraulic section for parts)	4¼	1	6.40
	D-21984	Plate—Reinforcing for D-20852.....	12½	1	
	SA-22972	Tube—Short 6' 5" lg.....	2½	1	4.50
	SA-22973	Tube—Long 6' 6" lg.....	2½	1	4.50
		Bushing—¾" x ½" Reducing.....	1/12	2	.15
		Ells—½" Street—Heavy.....	½	2	.55
		Fitting—⅛" Lubrication		6	.15
		Washer—1" Plain.....	1/6	4	4.60C
		Washer—1½" Flat	¼	2	18.40C

Prices subject to change without notice

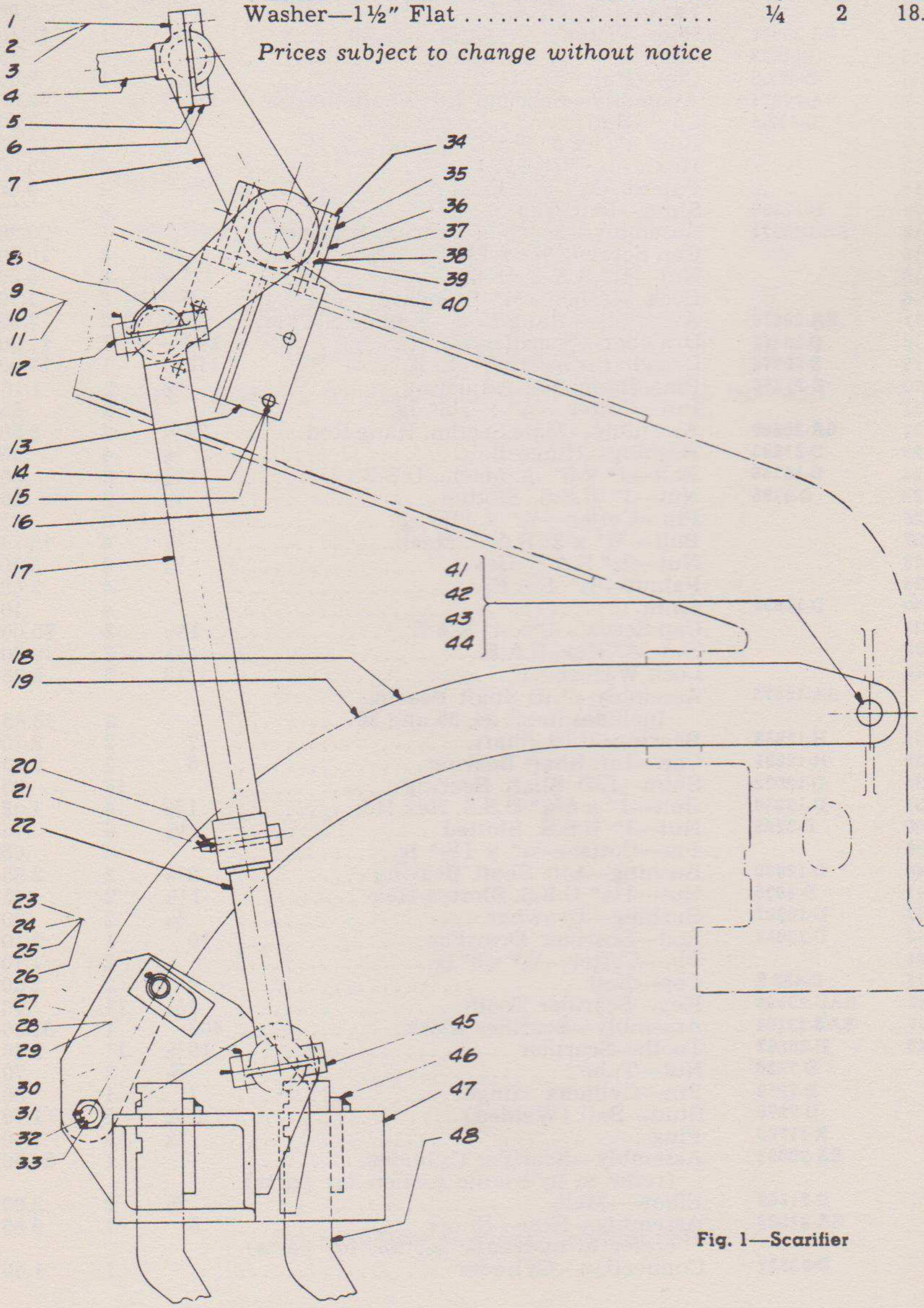

Fig. 1—Scarifier

INDEX

BLADES 11
CIRCLE 11
CIRCLE REVERSE GEAR CASE 9
CIRCLE REVERSE PARTS 9
DRAWBARS 13
DRAWBAR CONNECTION TO HEADBLOCK 13
END BITS 11
HYDRAULIC OR FLUID MOTOR—REFER TO HYDRAULIC SECTION .....
MOLDBOARD 11
MOLDBOARD CONNECTIONS 11
MOLDBOARD EXTENSIONS 11
MOLDBOARD LIFT PARTS 1
MOLDBOARD LIFT SHAFT LEFT HAND 3
MOLDBOARD LIFT SHAFT RIGHT HAND 3
SIDE SHIFT CASE 8
SIDE SHIFT PARTS 5

MOLDBOARD LIFT PARTS—MISCELLANEOUS

See Figure 1

Item No.	*Part No.*	*Description*	*Wt. Lbs.*	*Req.*	*Price*
1	D-432-S	Cap—Ball	2	6	$2.00
3	D-12699	Shim—Ball Cap	⅛	12	.10
	D-20123	Shaft—Lift Pivot	6	4	1.30
	SA-20668	Assembly—Moldboard Lift Cylinder, R.H. (See Hyd. Section)	140	1	75.20
	SA-20669	Assembly—Moldboard Lift Cylinder, L.H. (See Hyd. Section)	140	1	75.20
11	SA-21129	Assembly—Female Section of Hang Rod—Short	21¼	1	7.95
11	SA-21130	Assembly—Female Section of Hang Rod—Long	22½	1	9.00
4	SA-21131	Assembly—Male Section of Hang Rod	37½	2	10.00
	H-21422	Support—Lift Cylinder	6	4	2.45
	SA-21660	Assembly—Hose Short—For Lift Cylinder (See Hydraulic Section)	4	2	4.65
	SA-21661	Assembly—Hose Long—For Lift Cylinder (See Hydraulic Section)	4	2	4.95
10	D-21758	Pin—Hang Rod Adjusting	¾	2	1.10
	SA-21806	Assembly—Lift Shaft Bearing, Each	25½	2	14.60
		consisting of the following:			
	D-20732	Bushing—Lift Shaft	1	1	4.25
	H-21406	Bearing—Lift Shaft	24½	1	10.50
	SA-22718	Assembly—Rear Lift Shaft Bearing & Bushing	14½	2	10.70
		consisting of the following:			
	D-20732	Bushing—Rear Lift Shaft	½	1	4.25
	H-21423	Bearing—Rear Lift Shaft	14	1	5.80
5		Cap Screw—SAE—¾" x 3"	1	12	18.90C
2		Nut—SAE Hex.—¾"	⅛	12	5.00C

Prices subject to change without notice

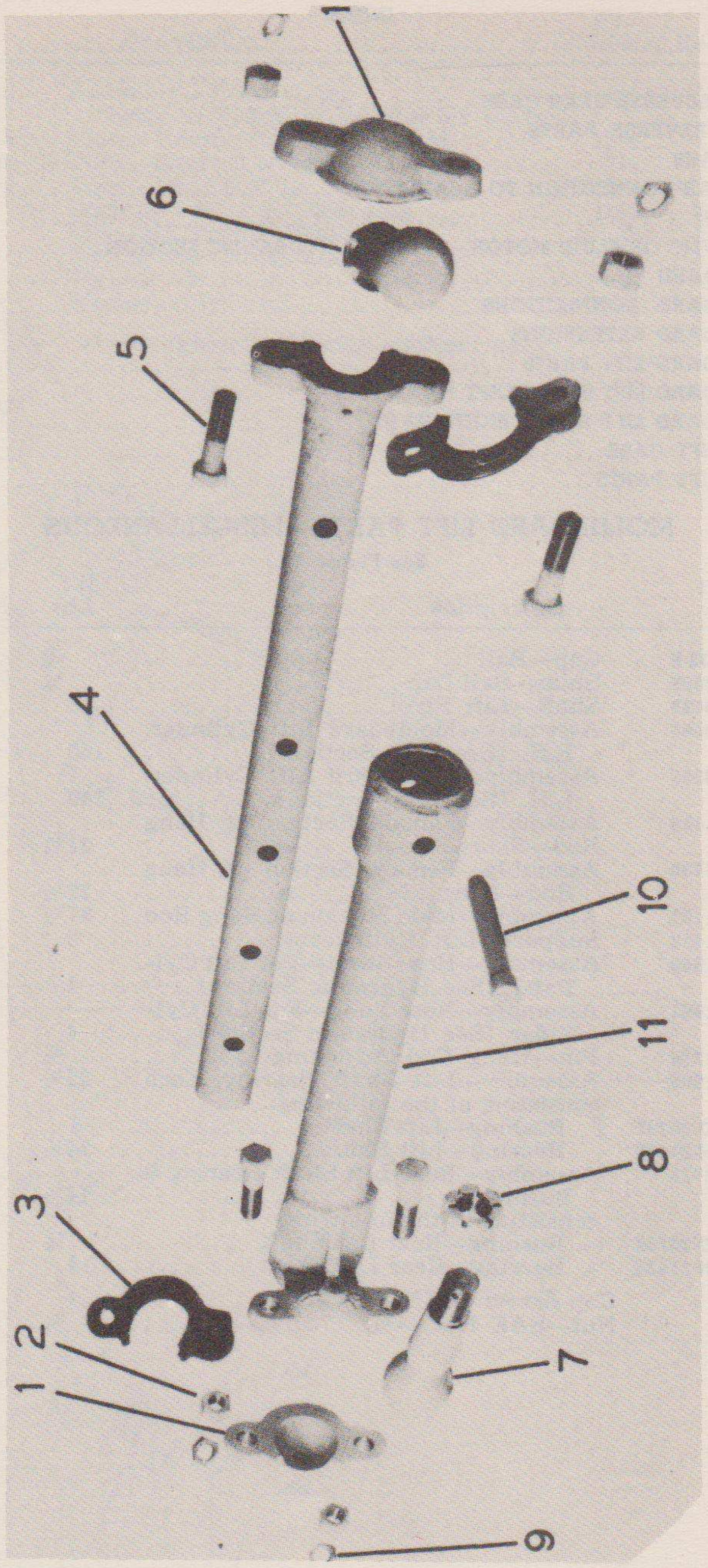

Fig. 1—Hang Rod

Item No.	Part No.	Description	Wt. Lbs.	Req.	Price
9		Palnuts—SAE—¾"		12	$3.00C
		Elbows—Extra Heavy—½"	1	4	.55
		Ells—Street—45° Extra Heavy—½"	1	2	.55
		Bushing—Reducing—¾" x ½"	½	2	.15
		Nipples—Pipe—½" x 2"	½	2	.10
		Bolts—SAE Machine—⅝" x 5"	1	4	10.10C
		Nuts—SAE Hex.—⅝"	⅛	4	3.50C
		Palnuts—SAE—⅝"		4	3.00C
		LIFT SHAFT ASSEMBLY—R. H.			
		See Figure 2			
	SAB-23763	Assembly—Lift Shaft—R. H. consisting of the following:		1	$140.00
1	D-20732	Bushing—Rear Lift Shaft	2	1	4.25
2	H-7521	Stud—Ball	4¼	1	2.10
3		Lock Washer—1¼" Std.	⅛	1	12.50C
4	D-7520	Nut—1¼" S.A.E. Slotted	½	1	.25
5		Pin—Cotter—$\frac{3}{16}$ x 2" lg.		1	.50C
6	B-20749	Arm—Adjustable Lift, R. H.	62	1	31.00
7	D-21999	Bushing—Adjustable Lift Arm	1	1	1.20
8		Ring—1" Harness		1	.05
9	D-20077	Plunger—Lock Pin	¼	1	.30
10	D-20082	Cap—Plunger	¼	1	.75
11	29-8536	Spring—Plunger		1	.20
12	SA-21831	Assembly—High Lift Circle Lock Pin	3½	1	2.70
13		Bolt—⅞ x 6" S.A.E. Hex. Hd.	1	2	20.65C
14		Nuts—⅞" S.A.E. Hex. Semi-Finish	⅛	2	9.00C
15		Palnuts—⅞" S.A.E.		2	5.00C
16	B-21727	Collar—Lift Arm Adjusting	30	1	20.00
17	B-20750	Collar—Lift Arm Adjusting	30	1	17.75
18	D-20741	Key	½	2	.30
19	SA-21424	Assembly—Blade Lift Shaft	148	1	38.50
20	D-21685	Collar—Blade Lift Shaft	1¾	1	2.35
21		Set Screw—¾ x ¾" Allen		1	.15
22	D-20732	Bushing—Lift Shaft	2	1	4.25
23	D-21407	Bolt—1⅛ x 7½" U.S.S.	2½	2	2.10
24	D-4386	Nut—1⅛" Slotted	¾	2	.80
25	H-21406	Bearing—Lift Shaft Front	25½	1	10.50
26	H-21404	Arm—Lift Shaft	53	1	26.75
27	D-21859	Key—¾ x ¾ x 4" lg.	½	1	.20
28		Screw—¾ x ¾" Allen Set		1	.15
29	H-7521	Stud—Ball	4¼	1	2.10
30		Pin—Cotter—$\frac{3}{16}$ x 2" lg.		1	.50C
31	D-7520	Nut—1¼" S.A.E. Slotted	½	1	.25
32		Lock Washer—1¼" Std.	⅛	1	12.50C
		LIFT SHAFT ASSEMBLY—L. H.			
		See Figure 3			
	SAB-23764	Assembly—Lift Shaft—L. H. consisting of the following:		1	$140.00
1	D-20732	Bushing—Rear Lift Shaft	2	1	4.25
2	H-7521	Stud—Ball	4¼	1	2.10
3		Lock Washer—1¼" Std.	⅛	1	12.50C
4	D-7520	Nut—1¼" S.A.E. Slotted	½	1	.25
5		Pin—Cotter—$\frac{3}{16}$ x 2" lg.		1	.50C
6	B-21728	Arm—Adjustable Lift, L.H.	62	1	36.50
7	D-21999	Bushing—Adjustable Lift Arm	1	1	1.20
8		Ring—1" Harness		1	.05
9	D-20077	Plunger—Lock Pin	¼	1	.30
10	D-20062	Cap—Plunger	¼	1	.75
11	29-8536	Spring—Plunger		1	.20
12	SA-21831	Assembly—High Lift Circle Lock Pin	3½	1	2.70
13		Bolt—⅞ x 6" S.A.E. Hex. Hd.	1	2	20.65C
14		Nut—⅞" S.A.E. Hex., Semi-Finish	⅛	2	9.00C
15		Palnuts—⅞" S.A.E.		2	5.00C
16	B-20750	Collar—Lift Arm Adjusting	30	1	17.75

Prices subject to change without notice

PARTS LIST

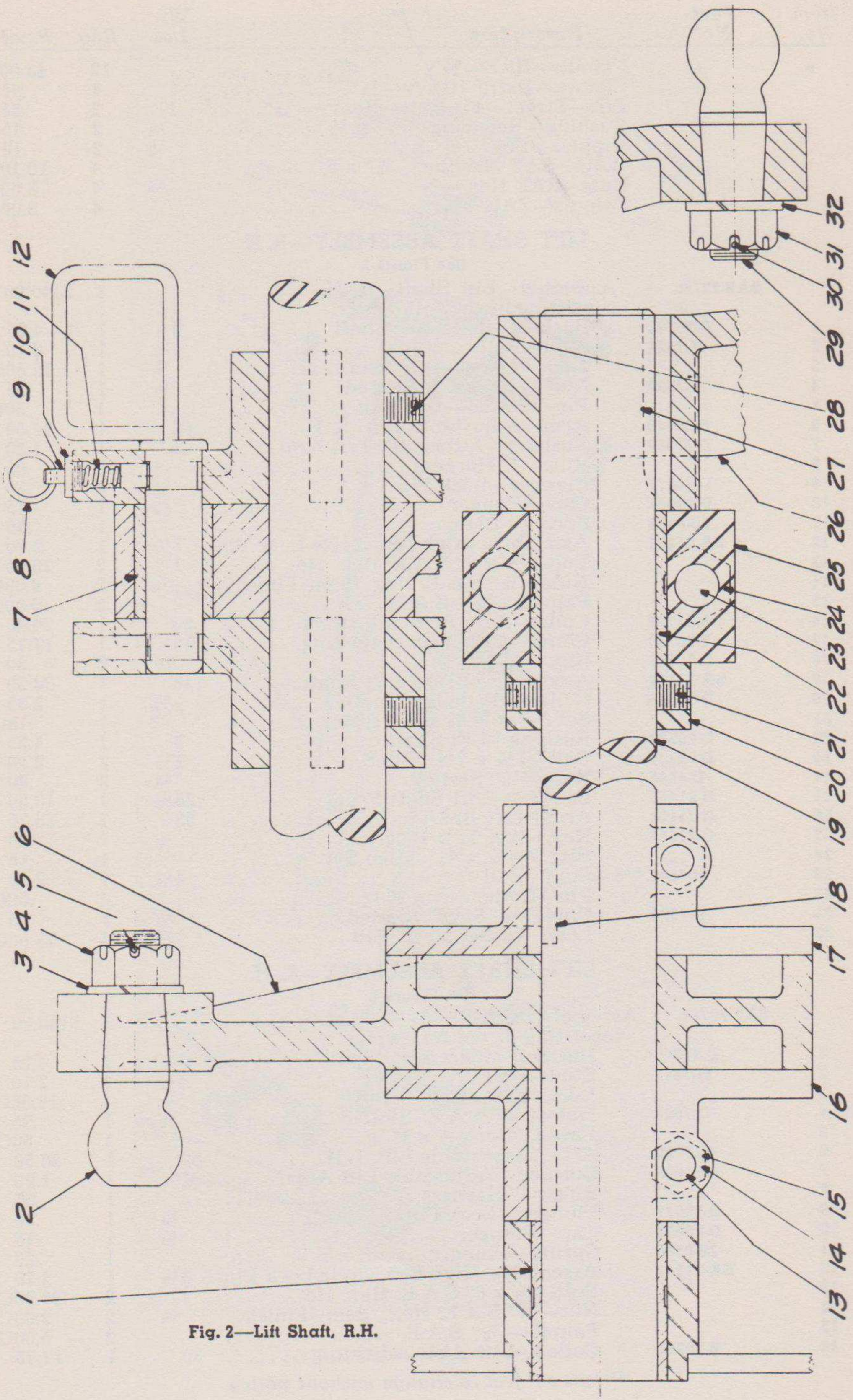

Fig. 2—Lift Shaft, R.H.

Item No.	Part No.	Description	Wt. Lbs.	Req.	Price
17	B-21727	Collar—Lift Arm Adjusting	30	1	20.00
18	D-20741	Key	½	2	.30
19	SA-21424	Assembly—Blade Lift Shaft	148	1	38.50
20	D-21685	Collar—Blade Lift Shaft	1¾	1	2.35
21		Screw—¾" x ¾" Allen Set		1	.15
22	D-20732	Bushing—Lift Shaft	2	1	4.25
23	D-21407	Bolt—1⅛" x 7½" U.S.S.	2½	2	2.10
24	D-4386	Nut—1⅛" Slotted	¾	2	.80
25	H-21406	Bearing—Lift Shaft Front	25½	1	10.50
26	H-21404	Arm—Lift Shaft	53	1	26.75
27	D-21859	Key—¾" x ¾" x 4" lg.	½	1	.20
28		Screw—¾" x ¾" Allen Set		1	.15
29	H-7521	Stud—Ball	4¼	1	2.10
30		Pin—Cotter—$\frac{3}{16}$" x 2" lg.		1	.50C
31	D-7520	Nut—1¼" S.A.E. Slotted	½	1	.25
32		Lock Washer—1¼" Std.	⅛	1	12.50C
33	D-4386	Nut—1⅛" U.S.S. Slotted Hex.	½	1	.80
34		Pin—Cotter—$\frac{3}{16}$" x 2½" lg.		1	.60C
35	D-21411	Bolt—High Lift Circle	3	1	1.55

SIDE SHIFT PARTS

See Figures 4 and 5

7		Bolt—¾" x 6½" U.S.S. Mach.	⅞	2	14.55C
14	D-20736	Shim—Side Shift Bearing		16	.05
15	H-20738	Bushing—Side Shift Shaft	3	1	2.90
42	SAH-21127	Bearing—Side Shift Shaft	20½	1	12.50
43	D-7340	Bolt—1⅛" x 6½" U.S.S.	2¼	2	2.10
	D-432-S	Cap—Ball	2	2	2.00
	D-4386	Nut—D-7340	½	2	.80
	D-7220	Nut—Tube	⅛	4	.70
	R-11590	Elbow—Male—Parker 10CXX	½	1	1.50
	D-12699	Shim—Ball Cap		6	.10
	SAG-21396	Assembly—Hydraulic Side Shift Motor For Details see Hydraulic Section	156	1	95.00
	SAH-21564	Assy.—Side Shift Rod—Male Section	20½	1	7.85
	SAB-21565	Assy.—Side Shift Rod—Female Section	18	1	10.50
	D-21662	Elbow—Male—Parker 10CCXX	½	2	2.00
	D-21683	Shaft—Side Shift Drive	3½	1	1.30
	D-21758	Pin—Hang Rod Adjusting	¾	1	1.10
	D-21895	Support—Side Shift Motor	12½	1	
	SA-22972	Tubing—Short—6"5" lg.	2½	1	4.50
	SA-22973	Tubing—Long—6"6" lg.	2½	1	4.50
	SAD-23082	Joint—Universal (one end round, other end square)	3	1	3.50
	SAD-23083	Joint—Universal (both ends for round shaft)	3	1	3.50
	D-23214	Pin for Universal		4	.20
		Key—¼" x 2½" Cotter		1	.60C
		Cap Screw—¾" x 3" SAE	½	4	18.90C
		Nut—¾" SAE Hex.	⅕	4	5.00C
		Palnut—¾" SAE		4	3.00C
		Bushing—¾" to ½" Reducing	$\frac{1}{16}$	2	.15
		Nipple—½" x 2½" Pipe	⅛	3	.10
		Nut—¾" Hex. U.S.S.	⅕	2	5.00C

Prices subject to change without notice

PARTS LIST

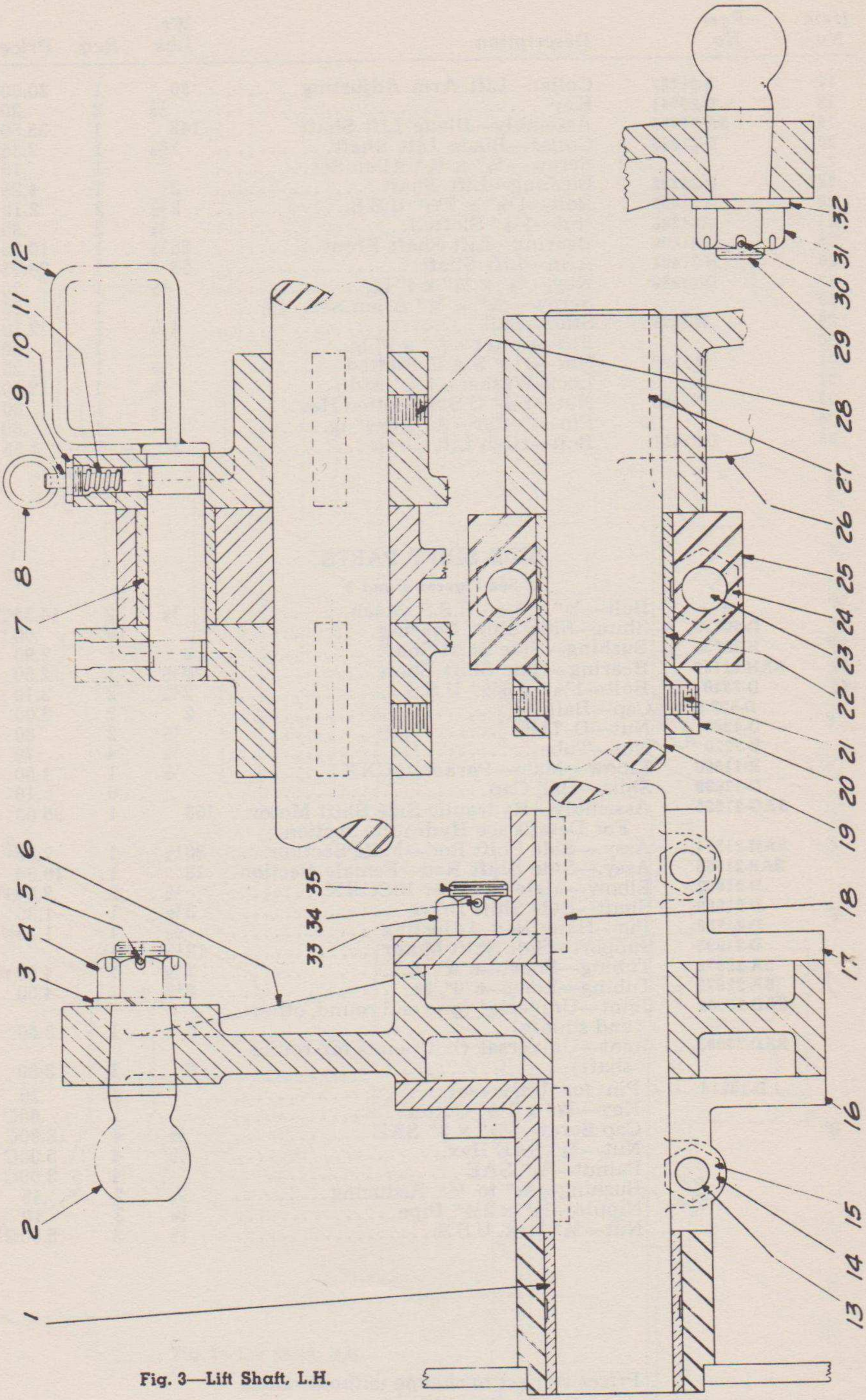

Fig. 3—Lift Shaft, L.H.

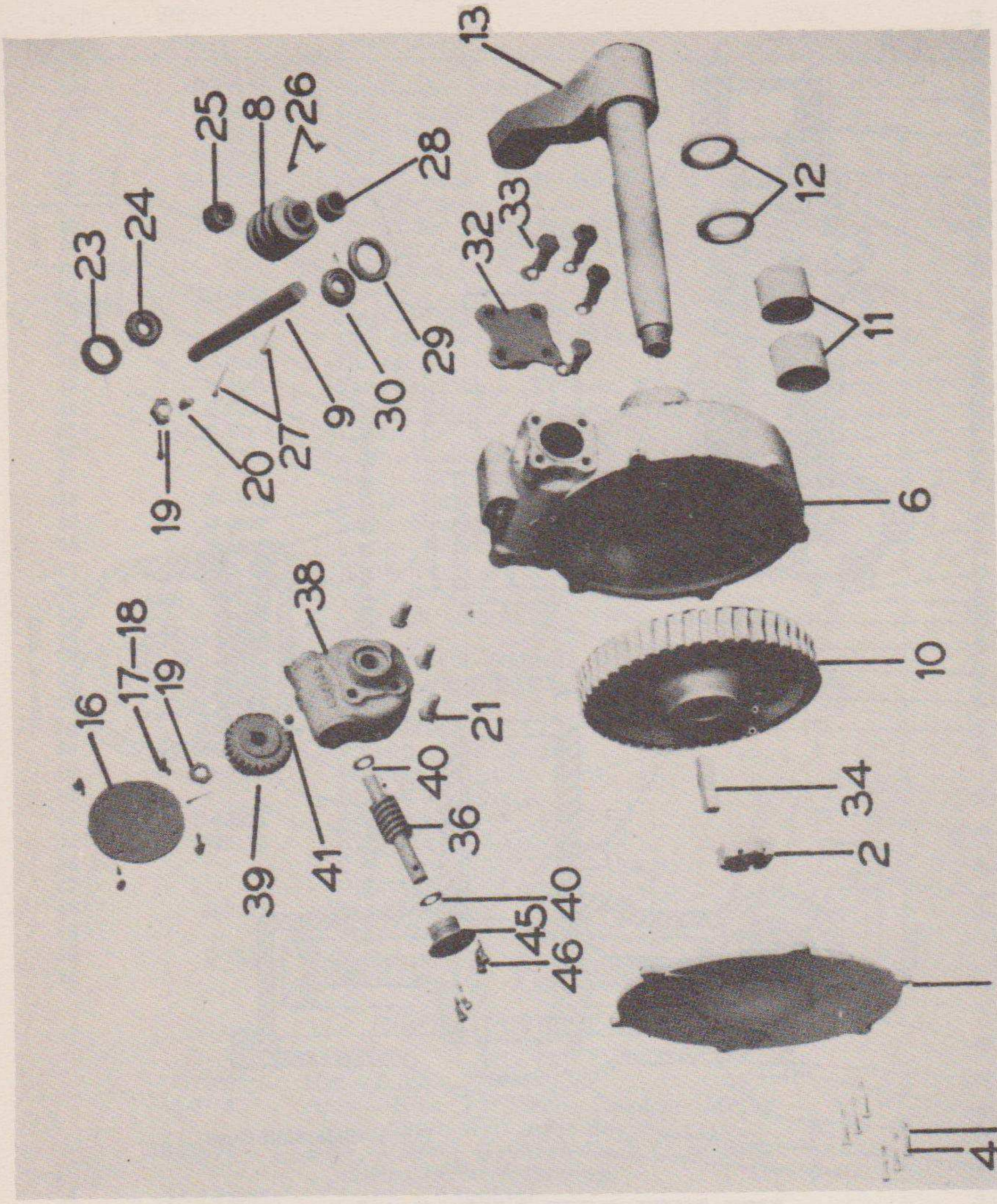

Fig. 4—Side Shift Case

Item No.	*Part No.*	*Description*	*Wt. Lbs.*	*Req.*	*Price*
	SA-21204	Assembly—Side Shift Case & Bushing consisting of Item Nos. 6, 11	119½	1	29.10
	SA-21205	Assembly—Side Shift Worm Gear Case & Bushing consisting of Item Nos. 22, 37, 38	19	1	12.90
	SA-21206	Assembly—Bushing Retainer & Bushing consisting of Item Nos. 44, 45	2	1	3.05

Prices subject to change without notice

PARTS LIST

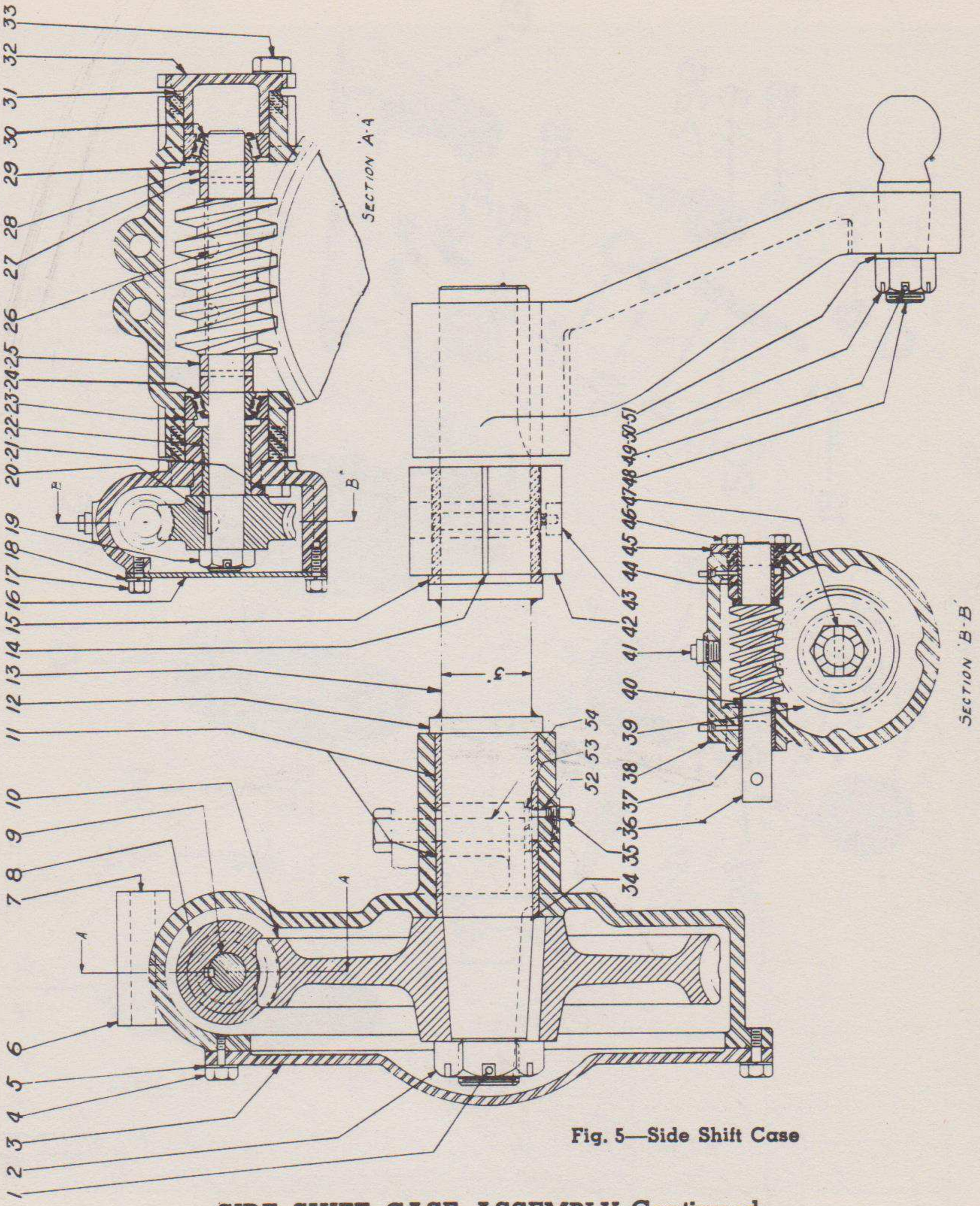

Fig. 5—Side Shift Case

SIDE SHIFT CASE ASSEMBLY Continued

See Figures 4 and 5

Item No.	Part No.	Description	Wt. Lbs.	Req.	Price
	SA-23363	Assy.—Side Shift Gear Case and Side Shift Worm Gear Case, consisting of the following:	387	1	$192.50
1		Pin—$\frac{3}{16}$" x 4" Cotter		1	.95C
2	D-4380	Nut	2	1	1.70
3	H-3449	Cover—Side Shift Gear Case	22	1	6.60
4		Cap Screws—$\frac{5}{16}$" x 1" U.S.S.		6	1.90C
5		Lockwasher—$\frac{5}{16}$"		6	.25C
6	B-24952	Case—Side Shift Gear	118	1	25.10
8	H-3833-A	Worm—R.H.	6½	1	6.25

Prices subject to change without notice

Item No.	Part No.	Description	Wt. Lbs.	Req.	Price
9	H-20171	Shaft—Side Shift Worm	5	1	2.05
10	H-24057	Gear—Lift—Right Hand Cut	73	1	26.50
11	D-20168	Bushing	2	2	1.75
12	D-20742	Collar	1	2	1.00
13	SA-22715	Assy.—Side Shift Shaft and Arm (Welded)	94	1	34.60
16	D-20148	Cover for Worm Gear Case	1½	1	.45
17		Cap Screws—$\frac{5}{16}$" x ¾" U.S.S.		4	1.70C
18		Lockwasher—$\frac{5}{16}$"		4	.25C
19	R-14050	Nut	½	1	.15
20		Key—Woodruff No. E		1	.10
21	D-22733	Cap Screw—¾" x 1¾" SAE	¼	3	.15
22	D-20169	Bushing	¼	1	.85
23	D-5838	Cup—Bearing (Timken No. 14283)	½	1	.65
24	D-5837	Cone—Bearing (Timken No. 14125)	½	1	1.45
25	D-3838	Collar for H-20171	½	1	.35
26		Key—Woodruff No. A		2	.05
27		Rivet—¼" x 2¼"		2	.84C
28	D-3838	Collar for H-20171	½	1	.35
29	D-5838	Cup—Bearing (Timken No. 14283)	½	1	.65
30	D-5837	Cone—Bearing (Timken No. 14125)	½	1	1.45
31	D-3591	Shim for Bearing Adj.		4	.10
32	H-3589	Cap—Bearing Adjusting	2¾	1	2.60
33		Cap Screws—¾" x 2" SAE	½	4	15.70C
34	D-24056	Key	1	1	.30
35		Lubricator—Alemite		1	.15
36	H-21363	Worm and Shaft	2½	1	5.10
37	D-20165	Bushing	⅛	1	1.55
38	B-20145	Case—Gear	17	1	NSS
39	H-21364	Worm—Side Shift	4	1	4.70
40	D-3167	Washer—Thrust	⅛	2	.20
41		Plug—⅜" Pipe	⅛	1	.06
44	D-20151	Bushing	1	1	.35
45	H-20170	Retainer	⅛	1	N.S.S.
46		Cap Screw—$\frac{5}{16}$" x ¾" U.S.S.		4	1.70C
47		Pin—⅛" x 2" Cotter		1	.25C
48	H-7521	Stud—Ball	4¼	1	2.10
49		Pin—⅛" x 2" Cotter		1	.25C
50	D-7520	Nut	½	1	.25
51		Washer—1¼" Flat	⅛	1	7.75C

CIRCLE REVERSE PARTS

See Figure 6

	D-7220	Nut—Tube		4	$ .70
	SA-7788	Assy.—Hose to Circle Reverse Motor (Refer to Hydraulic Sec.)	5	2	6.95
	SA-20671	Assy.—Circle Reverse Gear Gase consisting of the following:	132	1	92.30
1	SAD-23083	Joint—Universal		1	3.50
2	D-17049	Shaft—Worm	2	1	1.10
3	D-23214	Pin	1/12	1	.20
4	D-17050	Bushing	⅕	1	1.15
5		Lubricator—Alemite		1	.15
6	D-5845	Bearing—Thrust—Timken T-101	¼	2	.45
7	D-17048	Worm	4½	1	5.65
8		Key—"A" Woodruff		2	.05
9	D-5845	Bearing—Thrust	¼	2	.45
10	D-17050	Bushing	⅕	1	1.15
11		Lubricator—Alemite		1	.15
12		Pin—$\frac{3}{16}$" x 2" Cotter		1	.50C
13	D-17051	Collar	1	1	.40
14	H-21409	Cover—Gear Case	16	1	4.60
15		Pin—¼" x 3½" Cotter		1	1.25C

Prices subject to change without notice

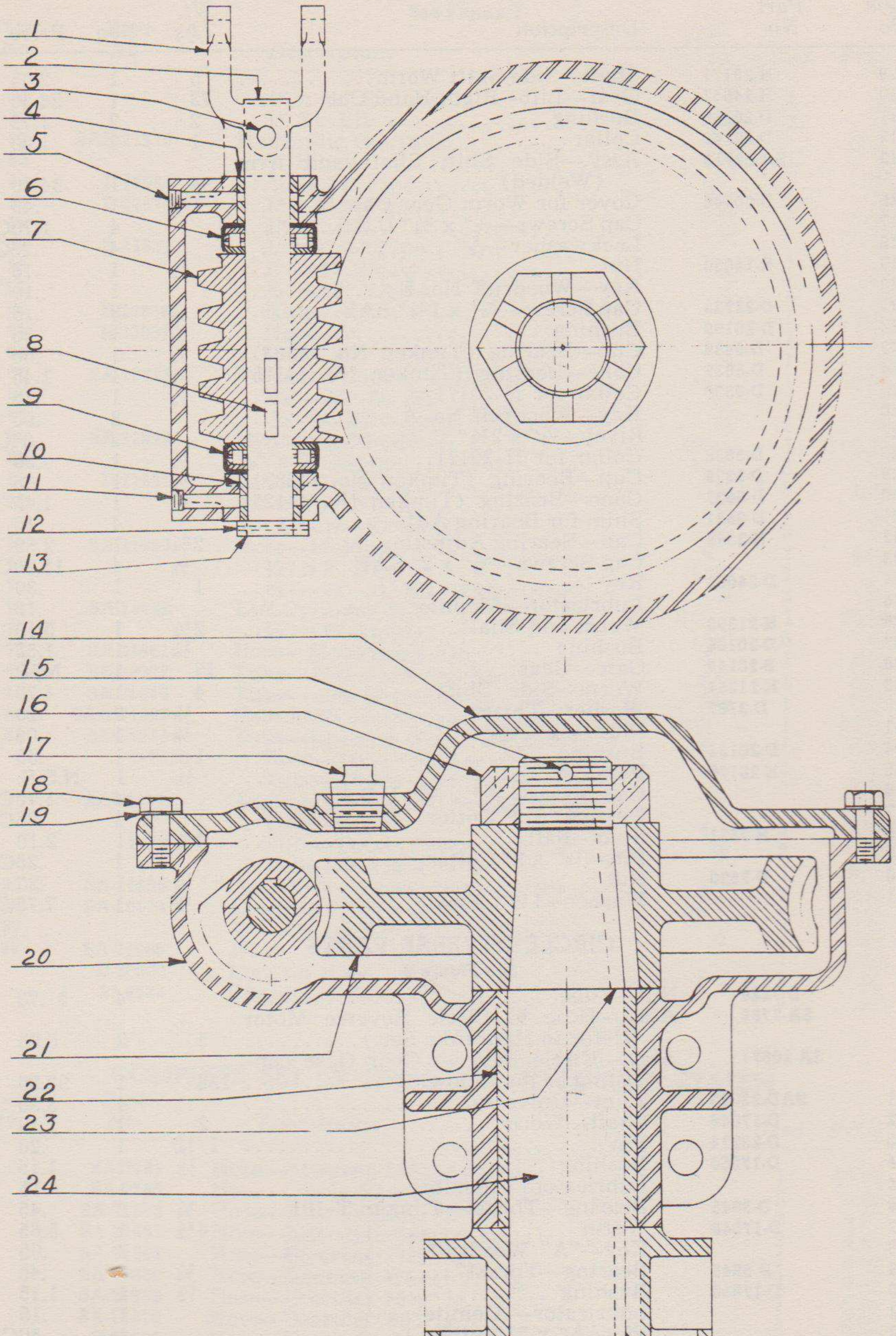

Fig. 6—Circle Reverse Case

Item No.	Part No.	Description	Wt. Lbs.	Req.	Price
16	D-17046	Nut	1½	1	1.30
17		Plug—¾" Pipe	⅛	1	.10
18		Cap Screw—⅜" x 1" U.S.S.		6	2.30C
19		Lockwasher—⅜"		6	.35C
20	B-21410	Case—Gear (order SA-20672)	45½	1	N.S.S.
21	H-21408	Gear—Worm	31½	1	20.25
22	D-17052	Bushing	1¾	2	2.65
23	D-17044	Key	½	1	.25
24	SA-20663	Assy.—Circle Reverse Gear Shaft	27	1	10.75
	SAG-21396	Assy.—Hydraulic Motor (Refer to Hydraulic Sec.)	156	1	95.00
	D-21662	Elbow—Male—Parker 10CCXX	½	2	2.00
	D-21680	Shaft—Circle Reverse Drive	2¾	1	1.25
	SA-22971	Tube—Long 10' 2" lg.	10	2	5.90
	SAD-23082	Joint—Universal—one end for round shaft, other square		1	3.50
	SA-20672	Circle Reverse Case and Bushing (Includes Items 20 and 22)		1	32.50
		Coupling—½"	1/6	1	.12
		Bushing—¾" to ½" Reducing	1/16	2	.15
		Nipple—½" to 2½" Pipe	⅛	3	.10

CIRCLE, MOLDBOARD AND CONNECTIONS

See Figure 7

1	SAH-20109	Bracket—Moldboard Adjusting—R. H.	30	1	$10.00
2	SAH-20110	Bracket—Moldboard Adjusting—L. H.	30	1	10.20
3	H-20111	Bit—Moldboard End—Right Hand	13	1	4.25
4	H-20112	Bit—Moldboard End—Left Hand	13	1	4.25
5	SAH-20115	Lug—Circle Knee	10	2	2.65
6	SAB-20176	Assembly—Circle (Welded)	665	1	146.40
7	SA-20673	Assembly—Moldboard and Reinforcing Angle—12"—Less Blade	870	1	119.00
8	A-333	Blade—½" x 6" x 12" (2 Pc.)		1	8.16
		Bolt—¾" x 2¾" S.A.E. Hex. Hd. Mch.	½	8	10.75C
		Bolt—⅞" x 6½" S.A.E. Hex. Hd. Mch.	1⅕	2	21.40C
		Bolt—¾" x 3½" S.A.E. Hex. Hd. Mch.	½	2	11.30C
		Nuts—¾" S.A.E.	⅕	12	5.00C
		Nuts—⅞" S.A.E. Hex., Semi-Finish	¼	2	9.00C
		Palnut—¾" S.A.E.		12	3.00C
		Palnut—⅞" S.A.E.		2	5.00C
		Washer—¾" Flat	1/10	8	1.20C
		Lock Washer—¾"		8	1.70C
		Washer—⅝" Flat	1/12	4	.80C
		Washer—⅞" Flat	⅛	4	2.50C
	No. 3	Bolt—Plow—⅝" x 2½"	⅓	4	.12
	No. 3	Bolt—Plow—⅝" x 2¼"	⅓	3	.12
	No. 3	Bolt—Plow—⅝" x 2" lg.	¼	26	.12
		Nuts—⅝" U.S.S.	1/10	29	3.50C
		Lock Washer—⅝"		29	1.00C
	SA-3939	Assembly—Flag Holder		2	1.05

MOLDBOARD EXTENSIONS

	H-22018	Moldboard—Extension—L. H. 2"	1	$17.10
	H-22019	Moldboard—Extension—R. H. 2"	1	17.10
	SAH-22130	Angle—Top—R. H.	1	4.15
	SAH-22131	Angle—Top—L. H.	1	4.15
	SAH-22132	Angle—Lower—R. H.	1	2.75
	SAH-22133	Angle—Lower—L. H.	1	2.75

Prices subject to change without notice

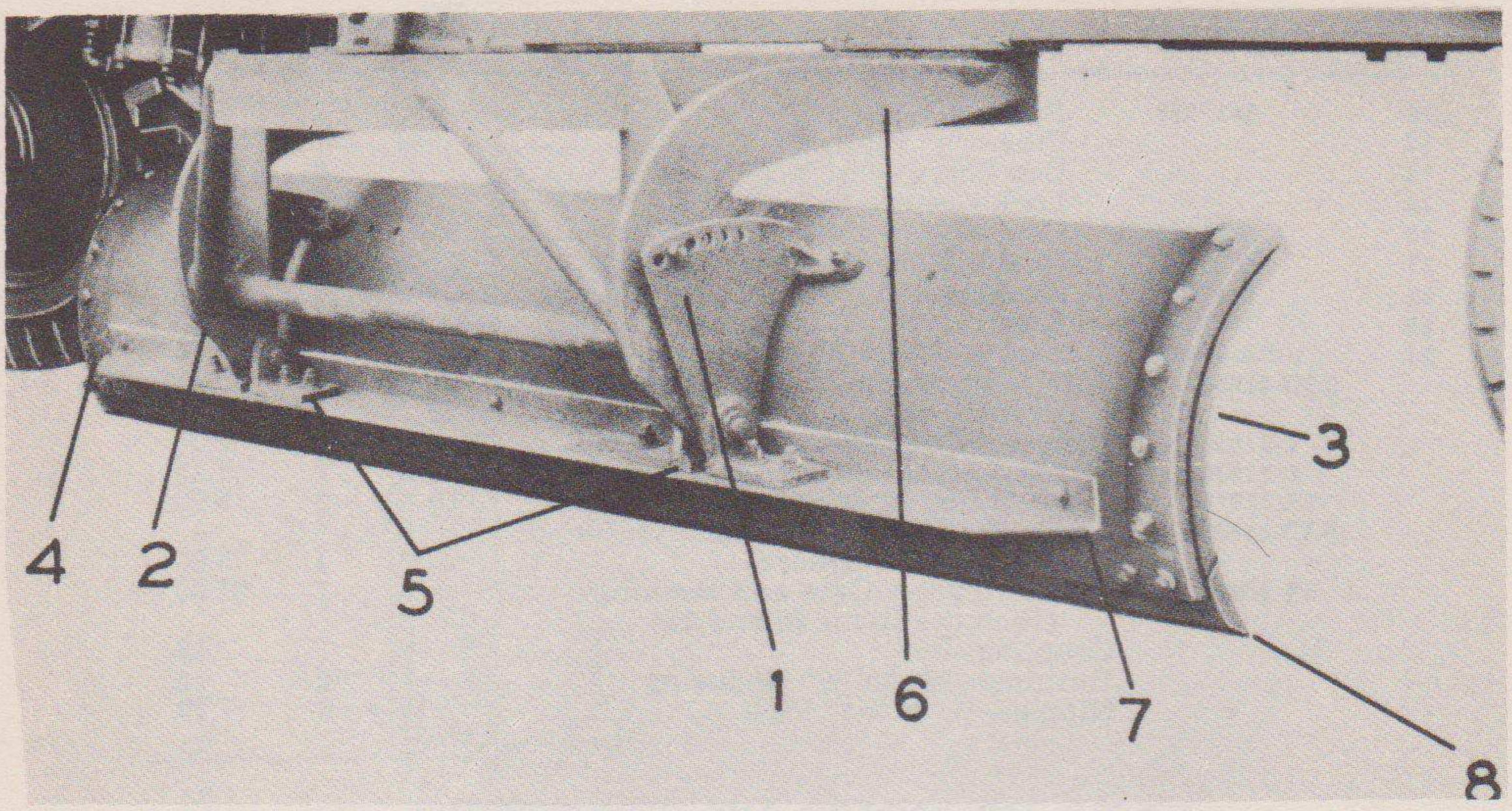

Fig. 7—Circle Moldboard and Connections

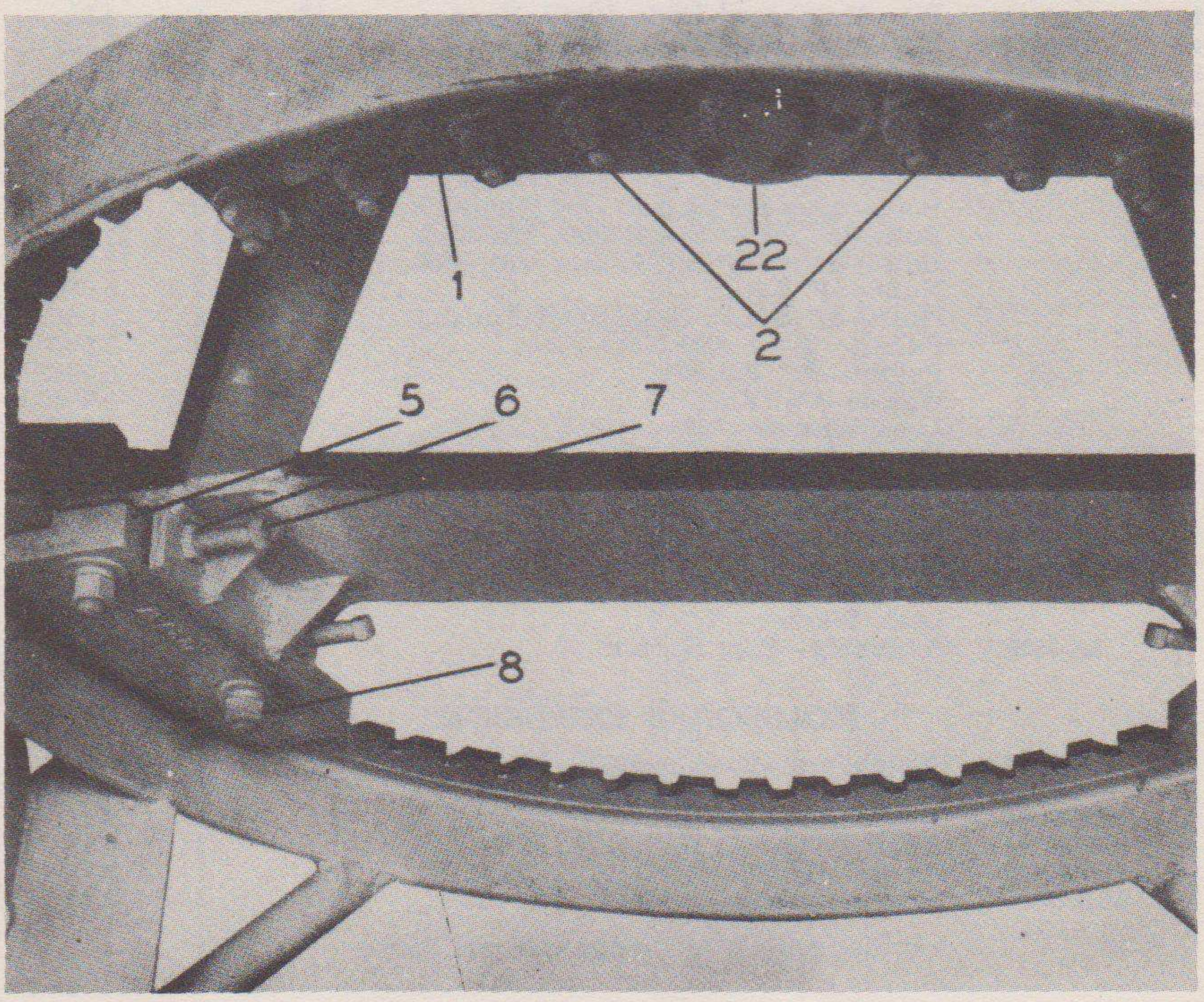

Fig. 7A—Drawbar Assembly and Circle Supports

DRAWBAR ASSEMBLY AND CIRCLE SUPPORTS

See Figure 7A

Item No.	Part No.	Description	Wt. Lbs.	Req.	Price
1	H-21400	Support—Rear Circle—Left Hand	48½	1	$7.30
	H-21401	Support—Rear Circle—Right Hand	48½	1	7.30
2		Bolts—¾" x 4" SAE Hex. Hd. Machine	⅝	6	11.85C
		Bolts—¾" x 5¼" SAE Hex. Hd. Machine	¾	2	13.45C
		Nuts—¾" SAE Hex.—Semi-Finish	⅛	8	5.00C
		Pal Nuts—¾" SAE		8	3.00C
5	B-20119	Support—Circle—Right Hand	22	1	6.40
	B-20120	Support—Circle—Left Hand	22	1	6.40
	D-7278	Stud—Ball—Welded to Drawbar	3¼	4	1.70
	D-12699	Shim for D-432-S Cap		8	.10
	D-20103	Shims for B-20119 and B-20120	¼	12	.05
	D-20104	Shims for Rear Circle Support	¼	20	.10
	SAG-20183	Assembly—Drawbar (Welded)		1	135.00
	D-20730	Conn.—Ball Stud	35	1	6.20
	D-21808	Bar—Circle Adjusting	6	2	1.10
6		Nuts—¾" U.S.S. Jam	⅛	4	5.00C
7		Set Screws—¾" x 4" U.S.S.	⅝	4	23.20C
8		Bolts—1" x 4½" SAE Hex. Hd. Mach.	1¼	4	25.15C
		Nuts—1" SAE Hex.—Semi-Finish	⅓	4	13.00C
		Pal Nuts—1" SAE		4	8.00C
		Set Screws—¾" x 1¾" Cup Pt.		4	13.95C

DRAWBAR CONNECTION

See Figure 8

1		Pin—Cotter—¼" x 3½" lg.		1	$1.25C
2	D-4056	Nut—Drawbar Ball Stud	5	1	2.80
3	H-20200	Stud—Drawbar Ball	29	1	16.50
4		Lubricator—Alemite		1	.15
5	H-20184	Cap—Drawbar Ball Stud	11	1	8.30
6	D-20185	Shim—Drawbar Ball Socket		as req.	.10
7		Cap Screw—⅞" x 3" S.A.E.	¾	4	30.00C
8		Lock Washer—⅞"		4	2.70C

Prices subject to change without notice

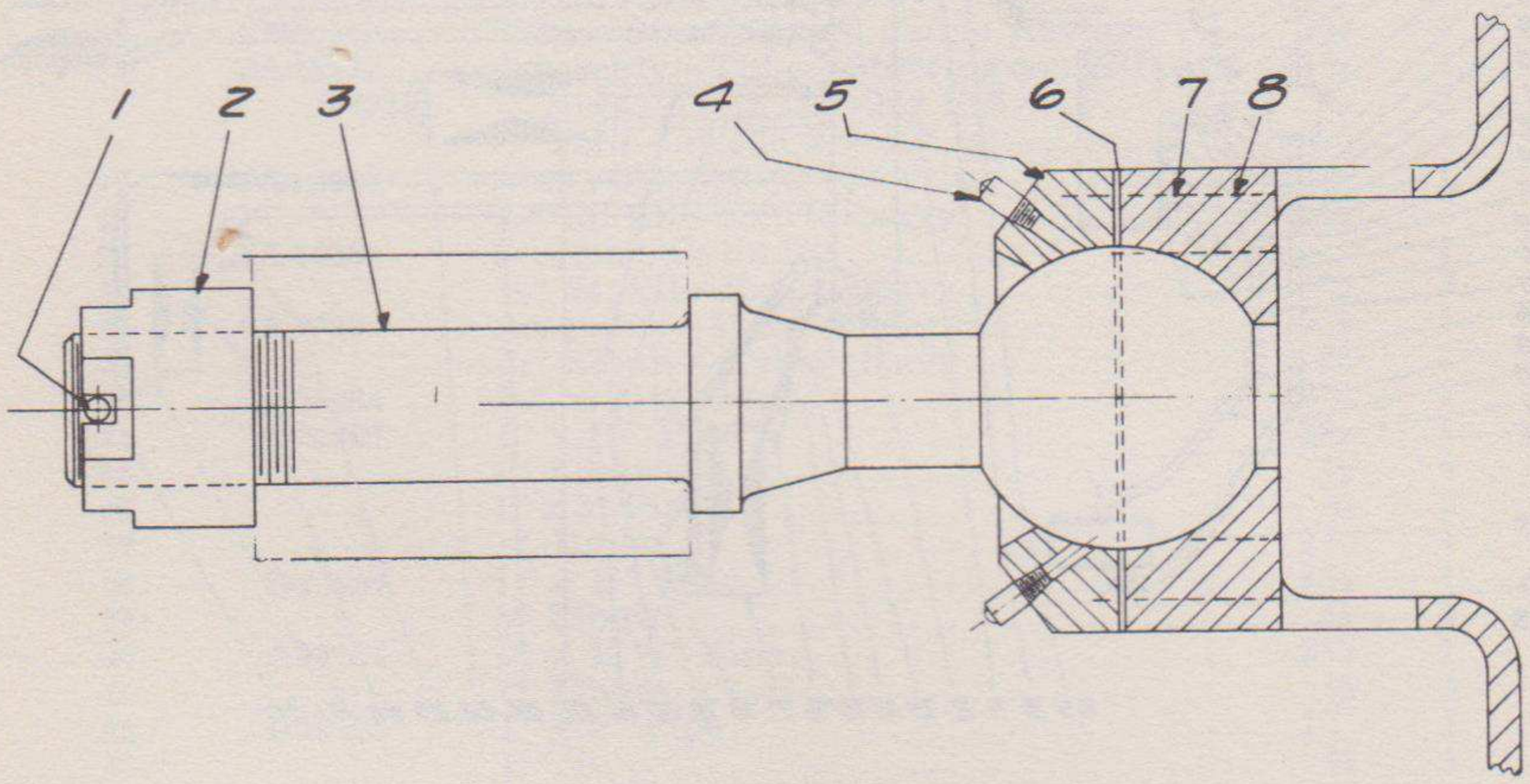

Fig. 8—Drawbar Connection

INDEX

CYLINDER—LEANING WHEEL 16
CYLINDER—LEFT HAND MOLDBOARD LIFT 16
CYLINDER—RIGHT HAND MOLDBOARD LIFT 13
CYLINDER—SCARIFIER 19
CYLINDER—STEERING 19
FILTER—HYDRAULIC OIL 19
HOSE—HYDRAULIC SYSTEM 3
HYDRAULIC OR FLUID MOTOR 13
MANIFOLD ASSEMBLY 10
OIL TANK—HYDRAULIC OIL 19
PIPES AND COUPLINGS 2
PUMP HOSE 6
PUMP DRIVE PARTS 6
PUMP—HYDRAULIC 5
RELIEF VALVE 7
TUBES—HYDRAULIC 2

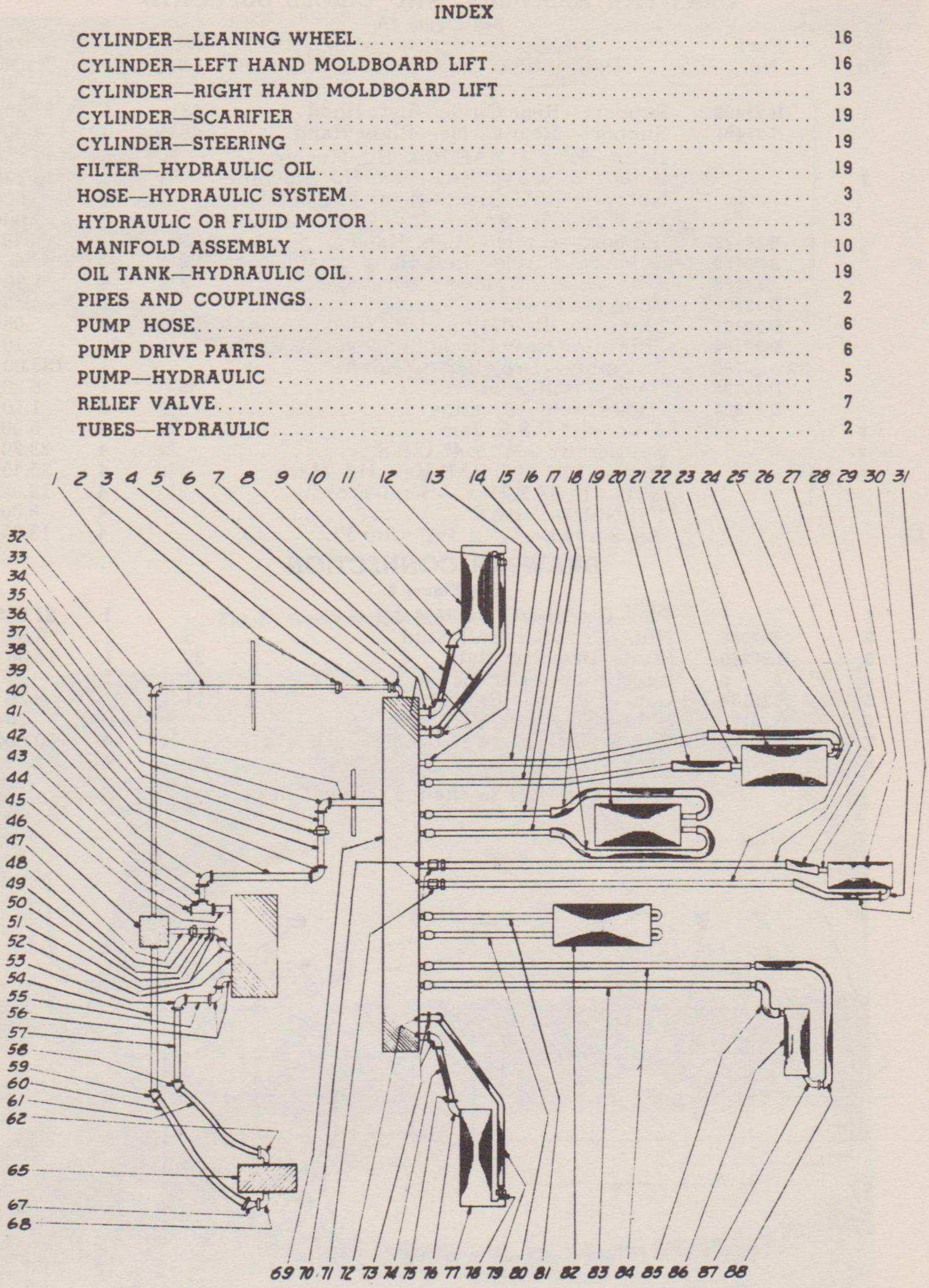

Fig. 1—Hydraulic System

HYDRAULIC SYSTEM COMPLETE

See Figure 1

Item No.	Part No.	Description	Wt. Lbs.	Req.	Price
1	R-15840	¾" x 20" Pipe	2	1	$ .50
2		¾" Union	¾	1	1.25
3	R-15051	¾" x 7½" Pipe	¾	1	.20
4		1" to ¾" Reducer	⅛	2	.20
5		1" St. Ell	½	1	.30
6		½" x 2½" Nipple	⅛	1	.10
7		½" Elbow—Extra Heavy	½	1	.55
8	SA-21660	Assembly—Hose—Moldboard Lift	4	1	4.65
9	SA-21661	Assembly—Hose—Moldboard Lift	4	1	4.95
10		½"—45° St. Ell—Extra Heavy	½	1	.55
11	SA-20669	Assembly—Lift Cylinder—L.H.	140	1	75.20
12		½" x 2" Nipple	1/10	1	.10
13	D-21662	Elbow—½" Parker	¾	1	2.00
14	SA-22973	Assembly—Tube—Side Shift and Scarifier, each consisting of	2½	1	4.50
	D-7220	Nuts—Tube (Parker 10BXX)	⅛	2	.70
		Tube—10.050 x 6' 6" lg.	2¼	1	3.10
15	SA-22972	Assembly—Tube—Side Shift and Scarifier, each consisting of	2½	1	4.50
	D-7220	Nuts—Tube (Parker 10BXX)	⅛	2	.70
		Tube—10.050 x 6' 6" lg.	2¼	1	3.10
16	SA-22971	Assembly—Tube—Steering and Circle Reverse, each consisting of	3¾	1	5.90
	D-7220	Nuts—Tube (Parker 10BXX)	⅛	2	.70
		Tube—10.050 x 10' 2" lg.		1	4.50
17	SA-22971	Assembly—Tube—Circle Reverse consisting of	3¾	1	5.90
	D-7220	Nuts—Tube (Parker 10BXX)	⅛	2	.70
		Tube—10.050 x 10' 2" lg.		1	4.50
18	SA-7788	Assembly—Hose—Circle Reverse	5	2	6.95
19	SAG-21396	Circle Reverse Motor (see details)	156	1	95.00
20	SA-21669	Assembly—Hose—Scarifier	3	1	5.85
21		½" St. Ell—Extra Heavy	½	3	.55
22	SA-21670	Assembly—Hose—Scarifier	4¼	1	6.40
23	SA-20888	Scarifier Cylinder			
24		½" St. Ell—Extra Heavy	½	3	.55
25	SA-22970	Tube—Steering and Circle Reverse	3¾	1	5.80
26	SA-22974	Assembly—Tube—Steering consisting of	3¾	1	5.75
	D-7220	Nuts—Tube (Parker 10BXX)	⅛	2	.70
		Tube—10.050 x 9' 10" lg.		1	4.35
27	SA-21663	Assembly—Hose—Steering	3	1	5.00
28		½" St. Ell—Extra Heavy	½	3	.55
29	SA-23264	Steering Cylinder		1	33.25
30		½" St. Ell—Extra Heavy	½	3	.55
31	SA-7786	Assembly—Hose—Steering	3½	1	5.00
32		¾" Elbow—Extra Heavy	¾	2	.75
33	D-23364	¾" x 25½" Pipe	2¼	1	.40
34	D-22306	1" x 19" Pipe	2½	1	.40
35		1" Elbow	½	5	.30
36		1" x 3" Pipe	⅜	3	.15
37		1" Union	1¼	1	1.50
38	D-21658	1" x 11" Pipe	1½	1	.30
39		1" Elbow	½	5	.30
40	D-23151	1" x 17½" Pipe	2½	1	.40
41		1" Elbow	½	5	.30
42	D-22305	1" x 9" Pipe	1	1	.25
43		1" Tee	¾	1	.35
44		1" Pipe Plug	¼	1	.12
45		1" x 3" Pipe	⅜	3	.15
46	SA-23365	Relief Valve Vickers R-106-B-11 (see details)			42.00
47		¾" x 4½" Pipe	⅜	1	.15
48		¾" Union	¾	1	1.25
49		¾" x 2" Pipe	¼	1	.10

HYDRAULIC SYSTEM COMPLETE

See Figure 1

Item No.	Part No.	Description	Wt. Lbs.	Req.	Price
50		1" x ¾" Reducer	⅛	2	.20
51		1" St. Ell	½	3	.30
52	SAH-21210	Hydraulic Oil Tank			17.35
53		1" Elbow	½	5	.30
54	D-17069	¾" x 34" Pipe	3¼	1	.65
55	D-22679	1" x 5½" Pipe	3¼	1	.30
56		1" St. Ell	½	3	.30
57	D-21659	1" x 32½" Pipe	3	1	.55
58		1"—45° Elbow	½	1	.30
59		¾"—45° Elbow	½	1	.25
60	H-23838	Hose—¾"		1	9.00
61	H-23837	Hose—1"		1	9.75
62		1" St. Ell	½	1	.30
65	SA-19798	Vickers Pump V-2111D-R.H.	16	1	79.00
67		¾"—45° St. Ell	¾	1	.75
68		¾" St. Ell—Extra Heavy	¾	2	.75
69	SA-22928	Hydraulic Manifold	155	1	106.25
70		½" x 2" Nipple	1/10	5	.10
71	D-21665	Parker Coupling	¾	3	1.35
72		½" x 2½" Nipple	⅛	1	.10
73		½" Elbow—Extra Heavy	½	3	.55
74	SA-21660	Hose—Moldboard Lift	4	1	4.65
75		½" x 2" Nipple	1/10	5	.10
76		½"—45° St. Ell—Extra Heavy	½	3	.55
77	SA-20668	Lift Cylinder, R.H.	140	1	75.20
78		½" x 2" Nipple	1/10	5	.10
79	SA-21661	Hose—Moldboard Lift	4	1	4.95
80	SA-22972	Tube—Side Shift and Scarifier	2½	1	4.50
81	SA-22973	Tube—Side Shift and Scarifier	2½	1	4.50
82	SAG-21396	Side Shift Motor (see details)	156	1	95.00
83	SA-22975	Tube—Leaning Wheel, consisting of	4	1	6.50
	D-7220	Nuts—Tube (Parker 10BXX)	⅛	2	.70
		Tube—10.050 x 11' 10" lg		1	5.10
84	SA-22976	Assembly—Tube—Leaning Wheel, consisting of	4	1	6.50
	D-7220	Nuts—Tube (Parker 10BXX)	⅛	2	.70
		Tube—10.050 x 12' 0"		1	5.10
85	SA-21666	Assembly—Hose—Leaning Wheel	6	2	8.85
86	SA-20674	Leaning Wheel Cylinder	42	1	33.75
87		½"—45° St. Ell—Extra Heavy	½	3	.55
88	SA-21666	Hose		1	5.10
	D-26906	Boot for Hose	1	2	1.00
	25-8294	Clamp for Hose		4	.10

COMPLETE SET OF HOSE FOR HYDRAULIC SYSTEM

Item No.	Part No.	Description	No. Used	Price
	SA-7786	Hose—Steering 25½" lg	1	$5.00
	SA-7788	Hose—Circle Reverse 42½" lg	2	6.95
	SA-21660	Hose—Lift Cylinder 29" lg	2	4.65
	SA-21661	Hose—Lift Cylinder 33" lg	2	4.95
	SA-21663	Hose—Steering 27½" lg	1	5.00
	SA-21666	Hose—Leaning Wheel 71" lg	2	8.85
	SA-21669	Hose—Scarifier 15½" lg	1	5.85
	SA-21670	Hose—Scarifier 39" lg	1	6.40
	H-23837	Hose—Pump Suction	1	9.75
	H-23838	Hose—Pump Pressure	1	9.00
	D-26906	Boot—Hose Protecting	2	1.00
	25-8294	Clamp—Hose Protecting Boot	4	.10

Reproduced by courtesy of Vickers, Inc., Detroit

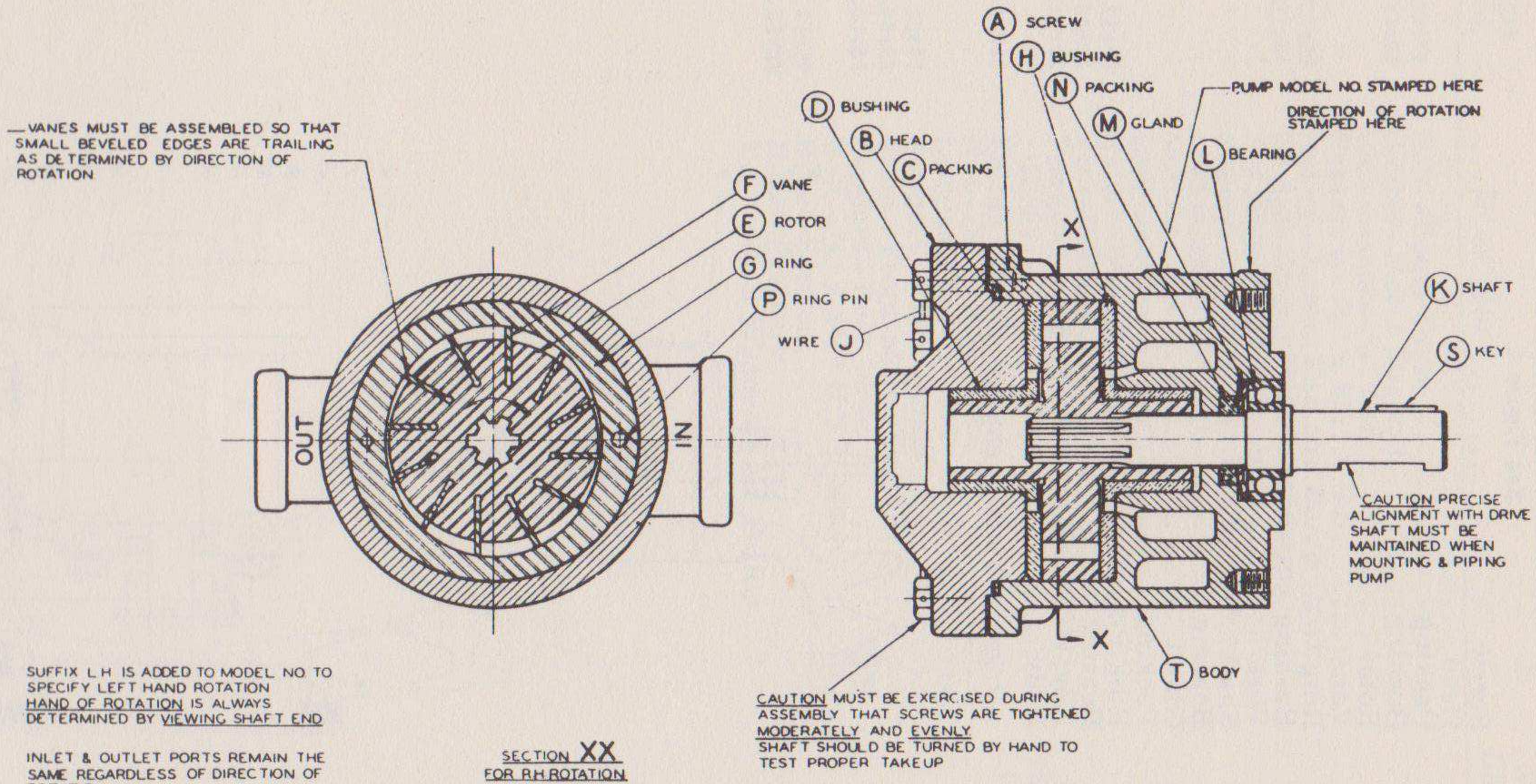

Fig. 2—Hydraulic Pump

VICKERS HYDRAULIC PUMP

See Figure 2

A	21032	Screw	8	$ .05
B	21608	Head	1	6.65
C	2021	Packing	1	.20
D	2016	Bushing	1	1.60
E	2007	Rotor	1	8.70
F	2009	Vane	12	.35
G	2014	Ring	1	7.90
H	2015	Bushing	1	1.60
J	17077	Wire	1	NC
K	2025	Shaft	1	4.90
L	1704	Bearing	1	2.60
M	2017	Gland	1	.10
N	2019	Packing	1	.20
P	2020	Ring Pin	1	.05
Q	1700	Bearing	1	1.70
S	1612	Key	1	.05
T	2004	Body	1	17.90

Prices subject to change without notice

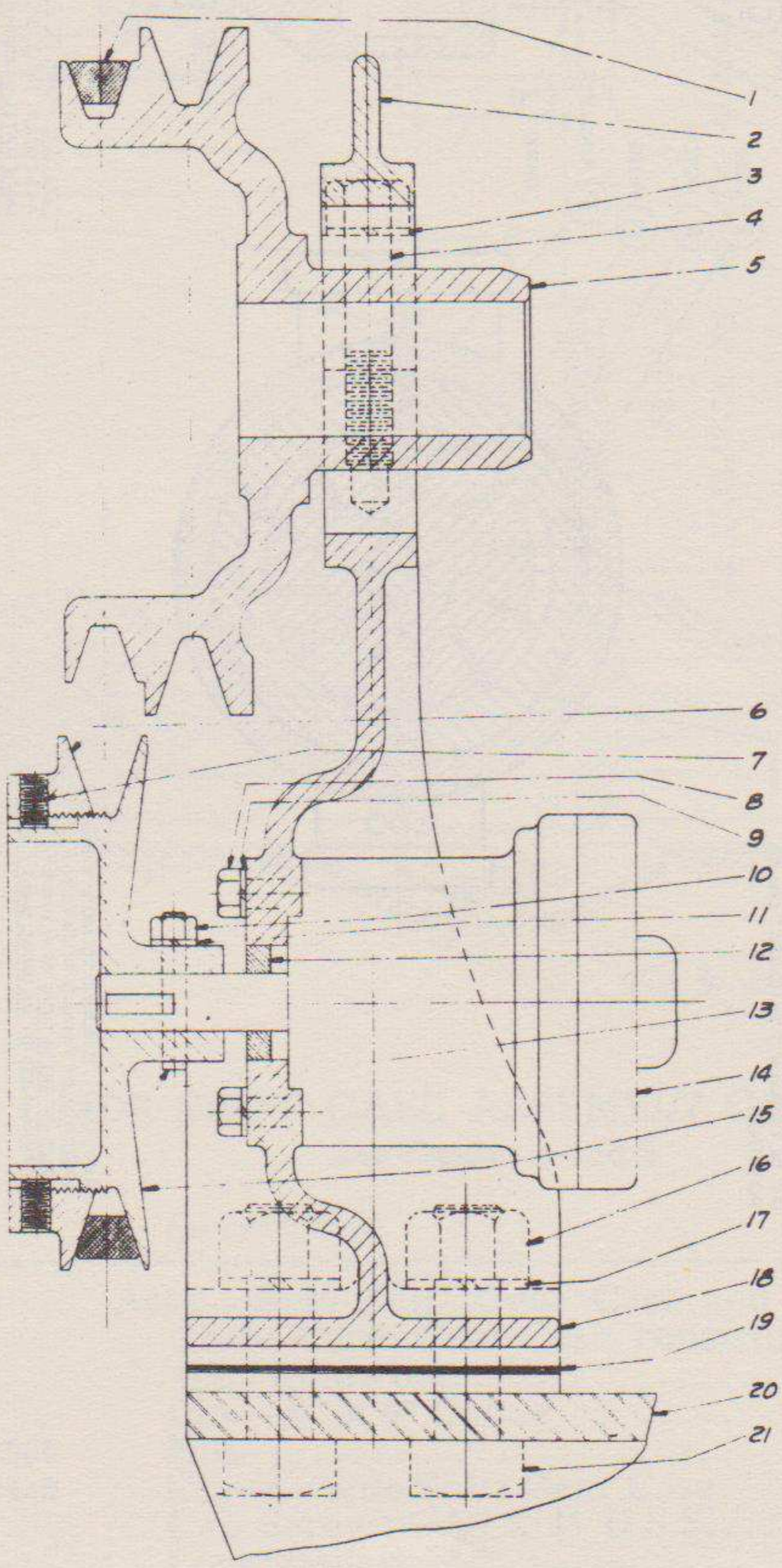

Fig. 3—Hydraulic Pump Drive

HYDRAULIC PUMP DRIVE AND HOSE TO PUMP

See Figure 3

Item No.	Part No.	Description	Wt. Lbs.	No. Used	Price
1	D-23474	Belt—Pump Drive		1	$2.50
2	H-23487	Clamp—Motor Support		1	4.50
3		Lockwasher—5/8" Std.		1	1.00C
4		Capscrew—5/8" x 2 3/4" U.S.S.		1	12.80C
5	B-23483	Pulley—Lower Fan and Pump Drive		1	12.25
6	H-21341	Flange—Pump Pulley Adjusting		1	3.75
7		Set Screw—3/8" x 1/2" lg.		2	4.10C
8		Capscrew—3/8" x 1 1/4" U.S.S.		6	2.50C
9		Lockwasher—3/8" Std.		6	.35C
10		Nut—3/16" S.A.E. Hex.		1	.75C
11		Lockwasher—3/16" Std.		1	.25C
12	D-23498	Collar—Pump Shaft	1/4	1	.30
13	D-25067	Pin—Pump Pulley Lock		1	.40
14	SAB-19798	Pump—Hydraulic Vickers No. V-2111-D R.H.	16	1	79.00
15	H-21340	Pulley—Pump	6	1	4.75
16		Nut—7/8" U.S.S. Hex.		1	7.50C
17		Lockwasher—7/8" Std.		1	2.70C
18	G-23482	Support—Front Motor		1	27.50
19	D-23488	Shim—Front Motor Support		Var.	.10
20	SAB-23485	Support—Rear Motor		1	23.75
21		Bolt—7/8" x 3 1/2" U.S.S. Mach.		2	16.90C
	H-23837	Hose—Suction		1	9.75
	H-23838	Hose—Pressure		1	9.00
		Key—No. 9 Woodruff for Pulley		1	.02

PARTS LIST

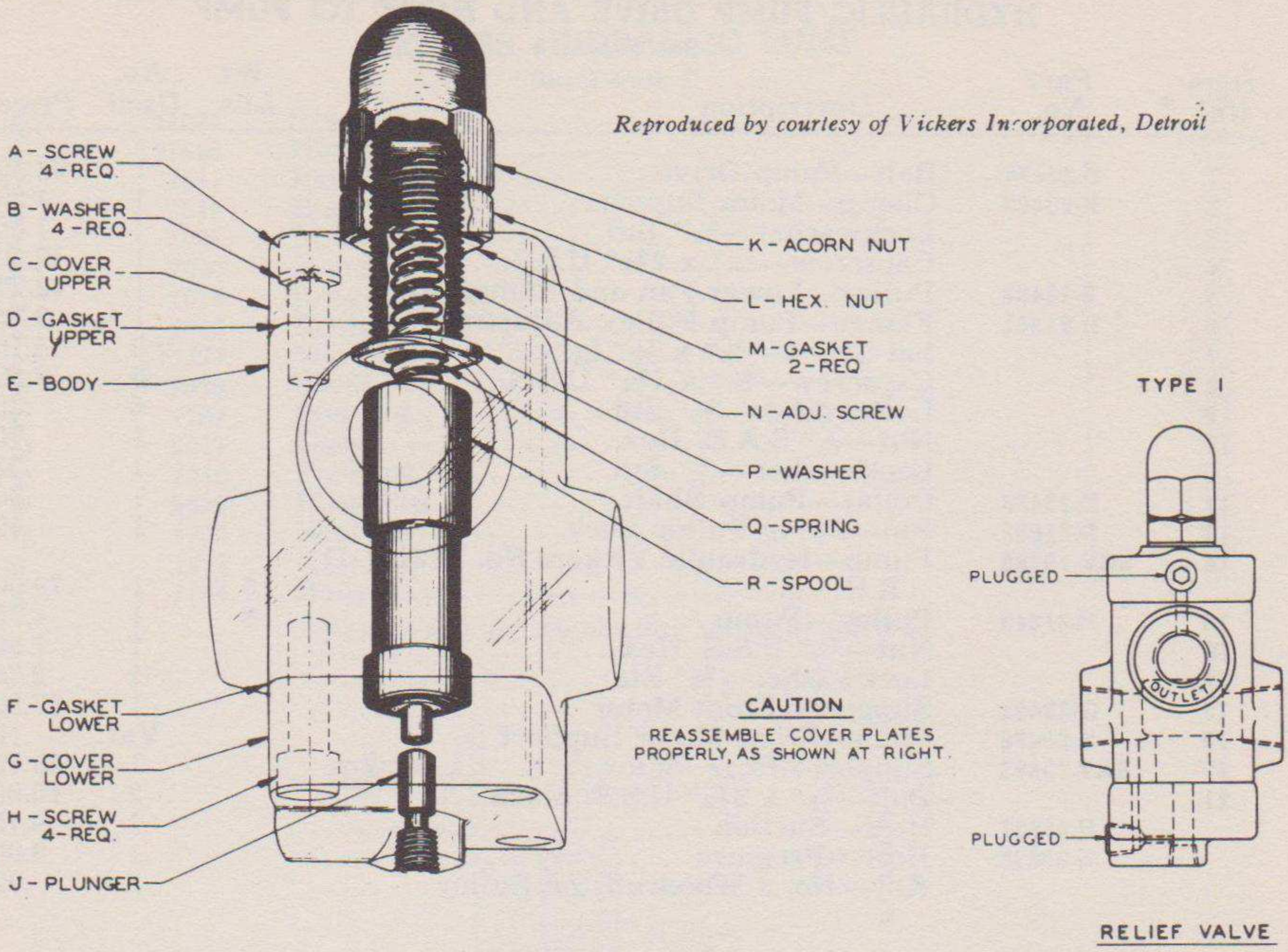

Reproduced by courtesy of Vickers Incorporated, Detroit

Fig. 4—Relief Valve

RELIEF VALVE

See Figure 4

Item No.	*Part No.*	*Description*		*Price*
	SA-23365	Relief Valve—R-106-B-11—Pipe Size: ¾"—Pressure Range: 125 to 500	1	$42.00
A	**1072**	Screws (Upper)	4	.10
B	**8542**	Lock Washer	4	.05
C	**20642**	Cover (Upper)	1	2.90
D	**20644**	Gasket (Upper)	1	.05
E	**20638**	Body	1	8.65
F	**20645**	Gasket (Lower)	1	.05
G	**20643**	Cover (Lower)	1	2.90
H	**1073**	Screws (Lower)	4	.10
J	**19715**	Plunger	1	.35
K	**1X-12100**	Acorn Nut	1	.50
L	**1X-15014**	Hex. Nut	1	.45
M	**2724**	Gasket	2	.05
N	**17465**	Adjusting Screw	1	.50
P	**1591**	Washer (Stop)	1	.05
Q	**61470**	Spring	1	.30
R	**20633**	Spool	1	2.50

Prices subject to change without notice

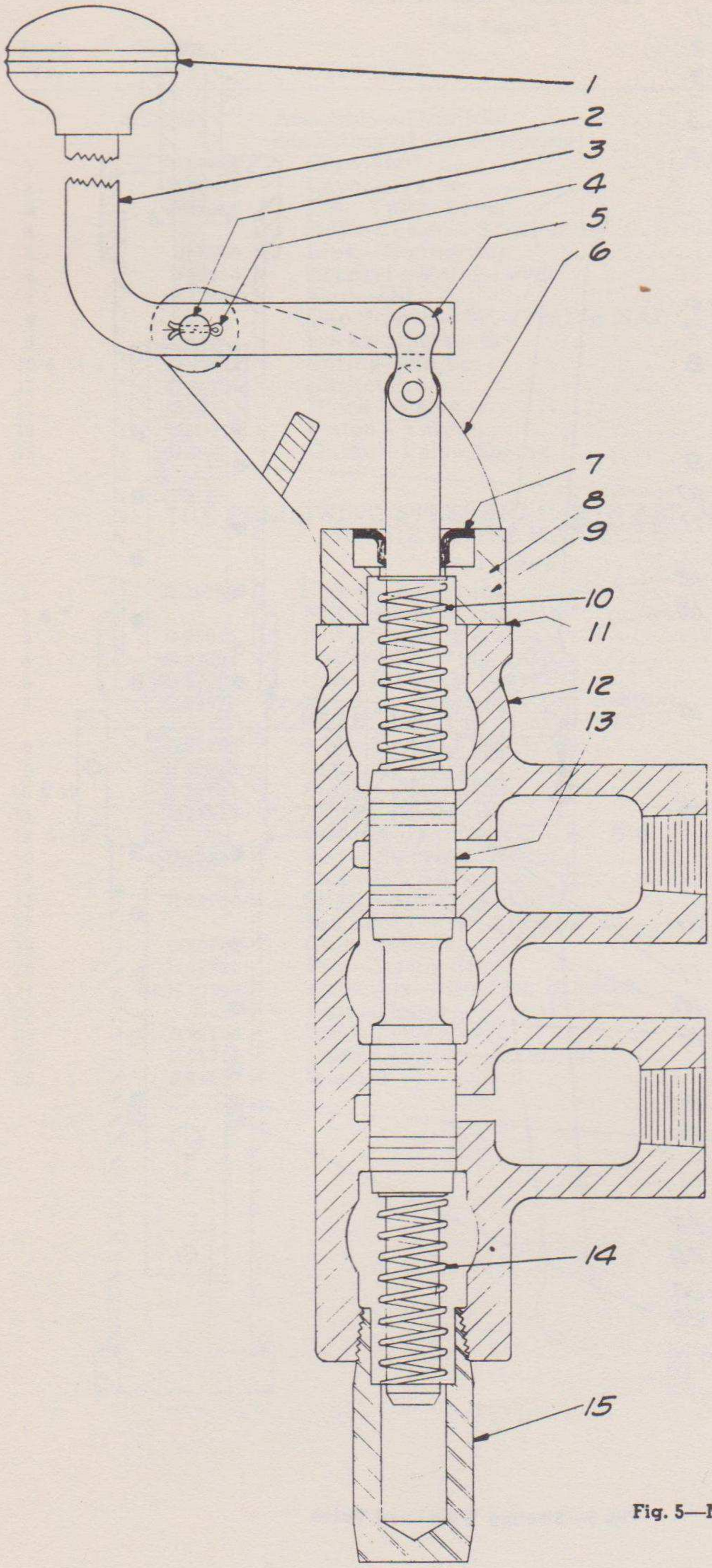

Fig. 5—Manifold

PARTS LIST

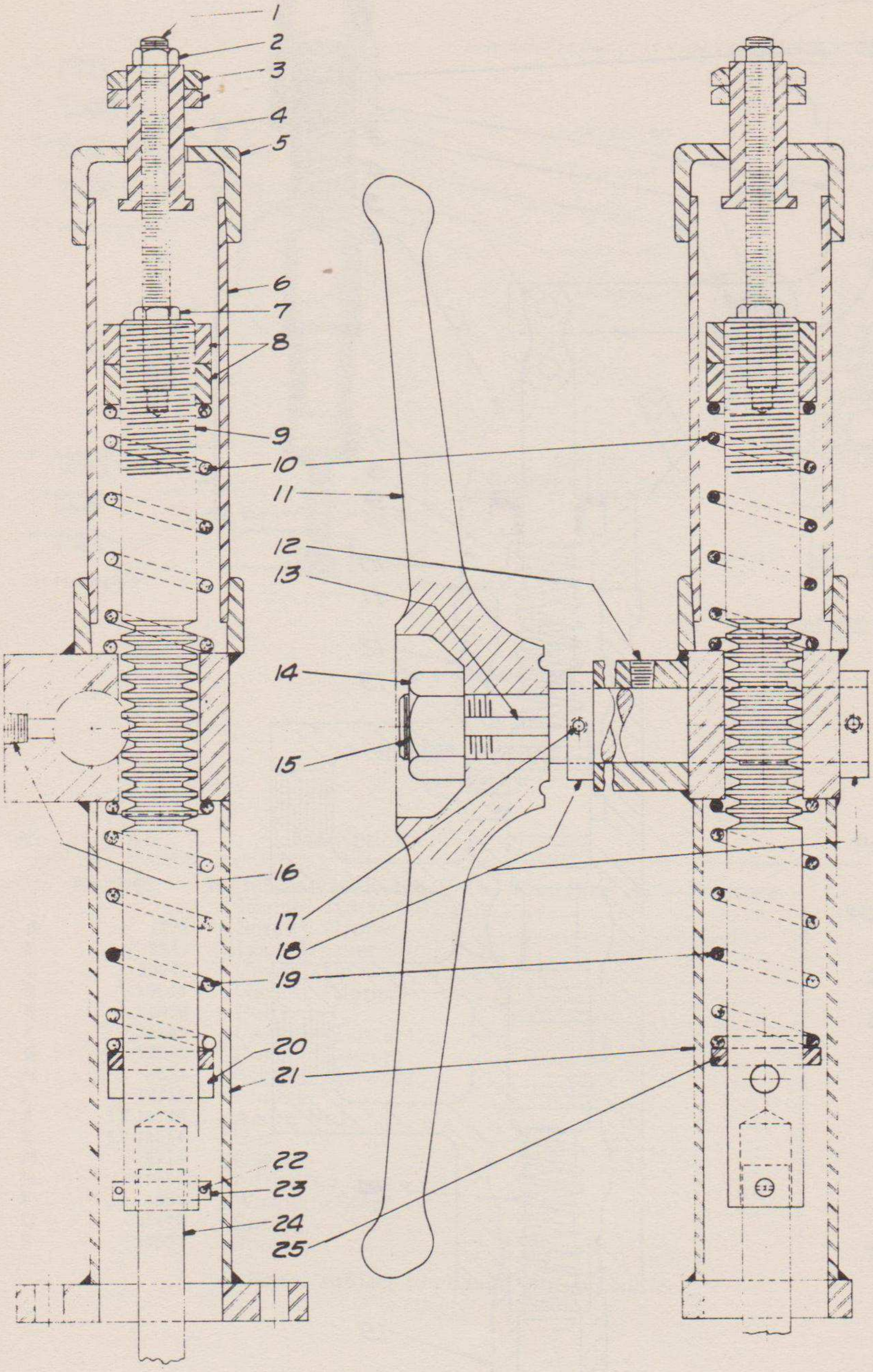

Fig. 6—Steering Wheel and Valve

MANIFOLD ASSEMBLY

See Figure 5

Item No.	Part No.	Description	Wt. Lbs.	Req.	Price
	SA-22928	Assembly—Manifold ..... consisting of the following:	155	1	
1	D-6899	Cap—Ball	1/8	6	.25
2	D-22920	Lever—Valve	1	6	.95
3	D-22923	Pin—Valve Lever.....	1/12	6	.30
4		Key—Cotter—$\frac{3}{32}$" x ¾" lg.....		12	.10C
5	D-6900	Link—Connecting		6	.20
6	B-22918	Bracket—Valve Lever.....	3	6	2.00
7	R-11467	Seal—Oil		7	.50
8		Cap Screws—⅜" x 1½" lg. SAE.....		12	2.70C
9		Lockwashers—⅜"		14	.35C
10 & 14	D-22922	Spring—Valve	1/14	12	.10
11	D-22924	Gasket		6	.10
12	G-20745	Block—Valve	75	1	
13	H-22919	Piston—Valve	1½	6	3.90
15	D-22921	Guide—Valve Spring	¾	6	.55

THE FOLLOWING STEERING PARTS ARE MOUNTED ON THE ABOVE MANIFOLD

See Figure 6

1	D-22786	Screw—Adjusting	¼	1	.20
2 & 7		Nut—⅜" SAE Hex. Half.....		2	1.30C
3	D-25055	Nut—Steering Adj.....	$\frac{1}{16}$	2	.25
4	D-25054	Collar—Steering Adj.....	¼	1	.60
5	D-22776	Cap—Steering Bracket.....	¾	1	.70
6	D-22777	Bracket—Steering—Top Section....	1	1	.55
		(Included in Item No. 21)			
8	D-22785	Nut—Vertical Shaft.....	¼	2	.50
9	H-22789	Shaft—Vertical	2½	1	1.55
10 & 19	D-22783	Spring—Centering	¼	2	.35
11	R-11414	Wheel—Steering	3½	1	5.00
12 & 16		Fitting—Lubrication—⅛" Str.....		1	.15
13	D-22432	Key—Steering Wheel.....	½	1	.15
14		Nut—⅞" SAE Hex.....	¼	1	7.50C
15	H-22788	Shaft—Steering Wheel.....	2½	1	2.10
17		Set Screw—¼" Allen ¼" lg.....		2	.05
18	D-22784	Collar—Stop	⅛	2	.35
20	D-22781	Pin—Spring Stop	½	1	.15
21	SAH-22790	Assembly—Steering Bracket	8	1	5.80
22		Pins—Cotter—$\frac{1}{16}$" x ½" lg.....		2	.10C
23	D-22780	Pin—Valve Conn.....	¼	1	.25
24	D-23710	Piston—Valve—Steering	1	1	3.10
25	D-26489	Washer		1	.20

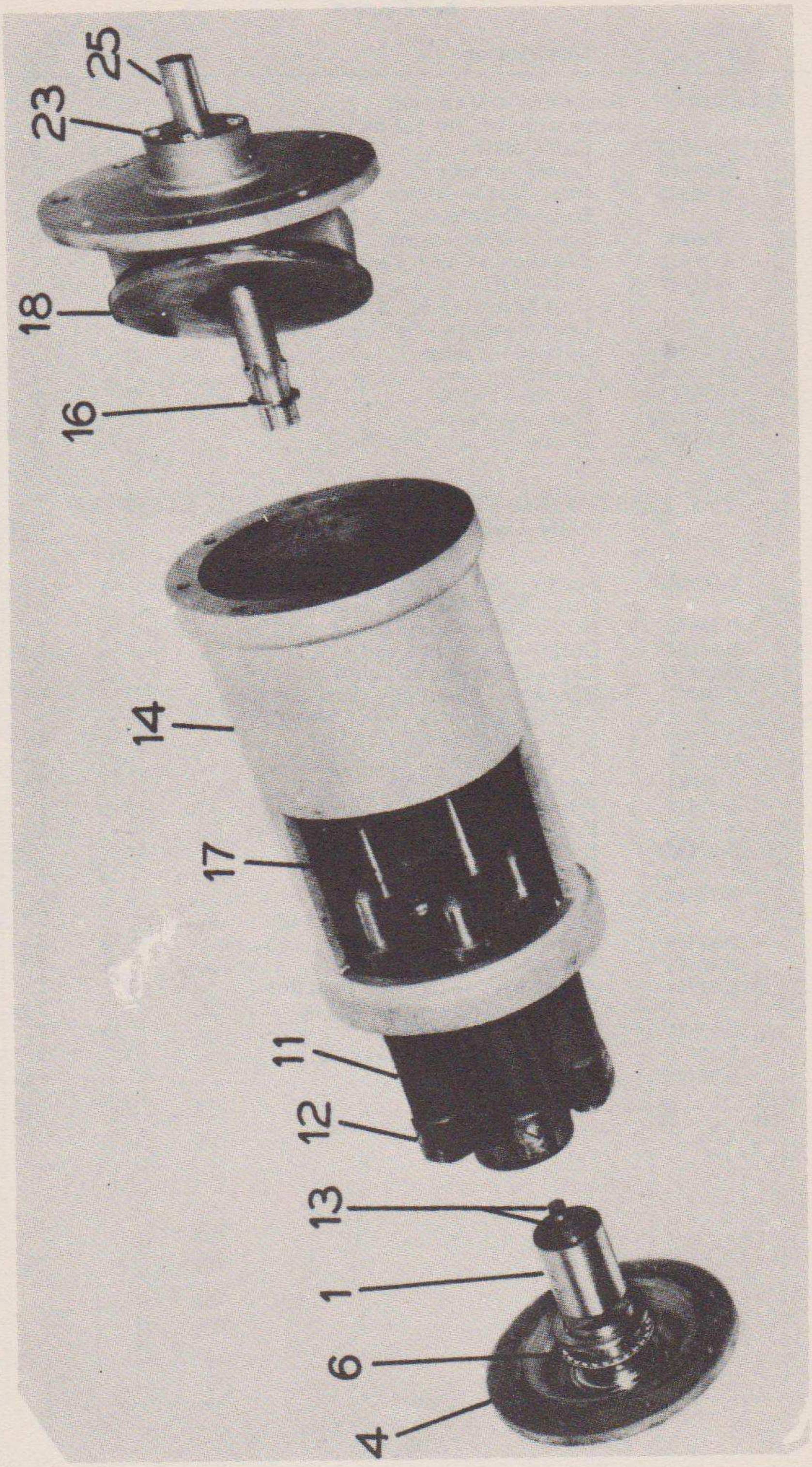

Fig. 7—Hydraulic Motor

PARTS LIST

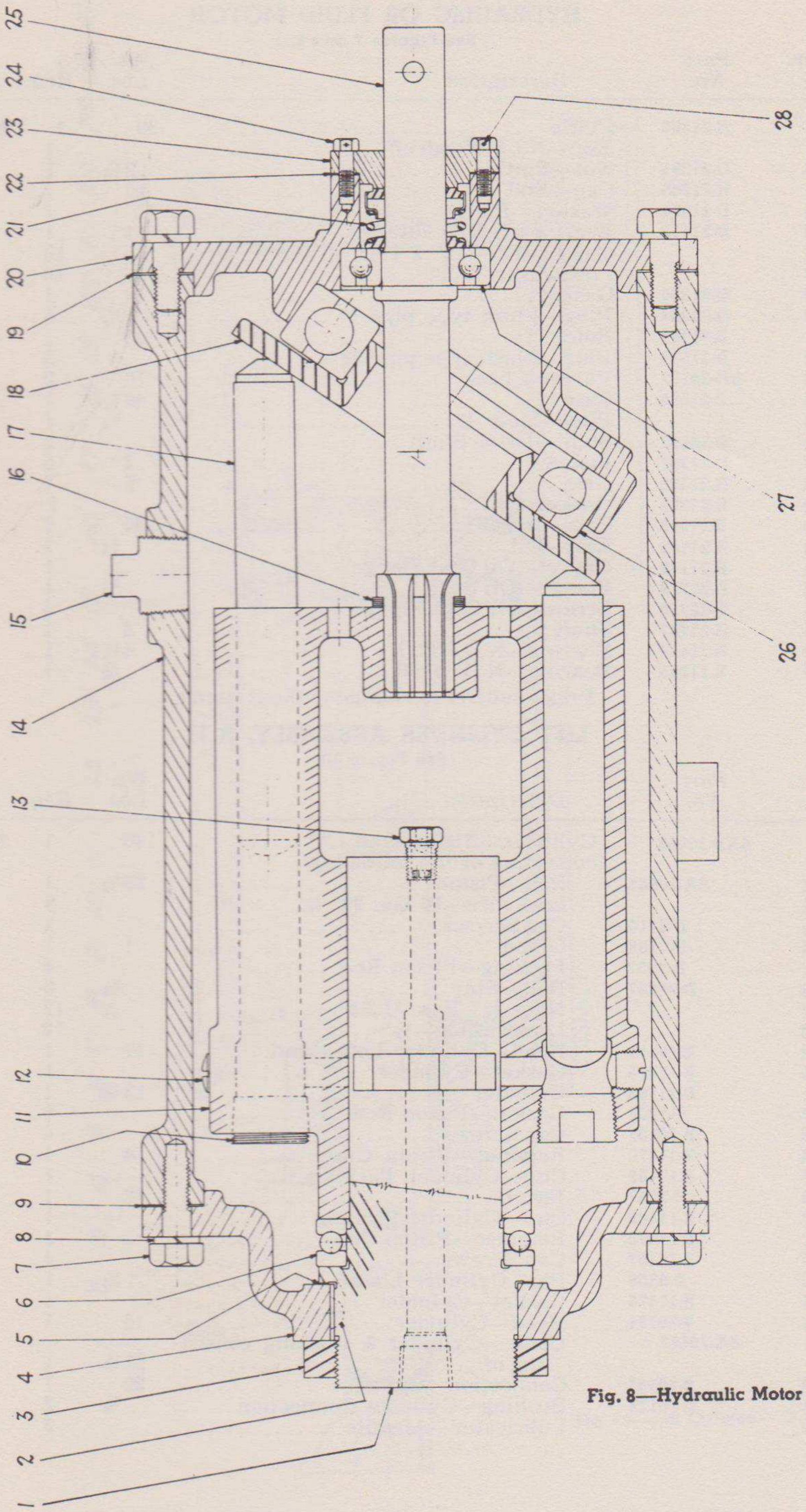

Fig. 8—Hydraulic Motor

HYDRAULIC OR FLUID MOTOR

See Figures 7 and 8

Item No.	Part No.	Description	Wt. Lbs.	Req.	Price
1	H-21383	Pintle	20	1	$17.05
2		Key—No. 3 Woodruff		1	.02
3	D-21391	Nut—Pintle	2¼	1	1.95
4	H-21385	Cap—End	15	1	4.30
5	D-21384	Washer—Pintle		1	.10
6	D-21413	Bearing—S.K.F. 2913	1	1	7.50
7		Cap Screws—7/16" x 1¼" lg. U.S.S.		16	3.50C
8		Lockwasher—7/16"		16	.40C
9	D-21395	Gasket		1	.15
10	D-21394	Plug—Flush type pipe 1"	¼	5	.15
11	B-21381	Rotor	49	1	26.75
12	D-21388	Plug—Flush type pipe 3/8"		5	.20
13	SA-24177	Valve—Check	16	2	.75
14	B-21390	Case	49½	1	18.90
15		Plug—Male 1"	¼	1	.15
16	D-26292	Shim—Drive Shaft		2	.25
17	D-21382	Piston	2	5	4.85
18	H-21386	Disc	5	1	8.45
19	D-21395	Gasket		1	.15
20	B-21389	Cap—End	20	1	7.25
21	R-21144	Seal—Oil	¼	1	3.60
22	R-21146	Gasket—Oil Seal Flange		1	.05
23	D-22719	Flange—Oil Seal	¾	1	1.55
24	D-22720	Screw—Oil Seal Flange		4	.10
25	H-21387	Shaft	4	1	3.75
26	D-21414	Bearing—N.D. 3217	4½	1	15.50
27	R-11289	Bearing—N.D. 1206	½	1	3.10

Prices subject to change without notice

LIFT CYLINDER ASSEMBLY, R. H.

See Figure 10

Item No.	Part No.	Description	Wt. Lbs.	Req.	Price
	SAB-20668	Cylinder—Right Hand Lift	140	1	$75.20
		consisting of the following:			
1	SA-20665	Rod—Piston	25½	1	8.25
2		Lockwire—16 Ga. 20" lg.		2	NC
3	D-8710	Cap Screws		2	.10
4	D-7268	Gland	1	1	1.15
5	D-7307	Packing—Piston Rod		1	4.00
6	D-21097	Bolt—Stay	¼	6	.35
7		Nut—½" Hex. U.S.S.	1/16	12	2.20C
8		Lockwasher—½"		12	.50C
9	B-26114	Head—Cylinder Left Hand	17	1	4.85
10	R-11475	Gasket—Cylinder		1	.15
11	D-21095	Cylinder	13½	1	12.95
12	D-7308	Gasket—Piston Rod		1	.05
13	R-10107	Cap Screws		4	.10
14	R-11470	Retainer—Piston Cup	4	1	1.70
15	R-11469	Cup—Cylinder Packing	1/3	1	3.40
16	H-7267	Piston	12	1	5.35
17	R-11469	Cup—Cylinder Packing	1/3	1	3.40
18	R-11470	Retainer—Piston Cup	4	1	1.70
19	R-10107	Cap Screws		4	.10
20	D-8506	Pin—Cylinder Lock	¼	1	.15
21	R-11475	Gasket—Cylinder		1	.15
22	B-20734	Head—Cylinder	15	1	6.95
	SA-20667	Conn.—Cylinder & Bushing consisting of:	21½	1	19.80
23	B-20733	Connection—Cylinder	20	1	NSS
24	D-20122	Bushing—Cylinder Connection	¾	2	1.10
25		Lubricator—Alemite		2	.15

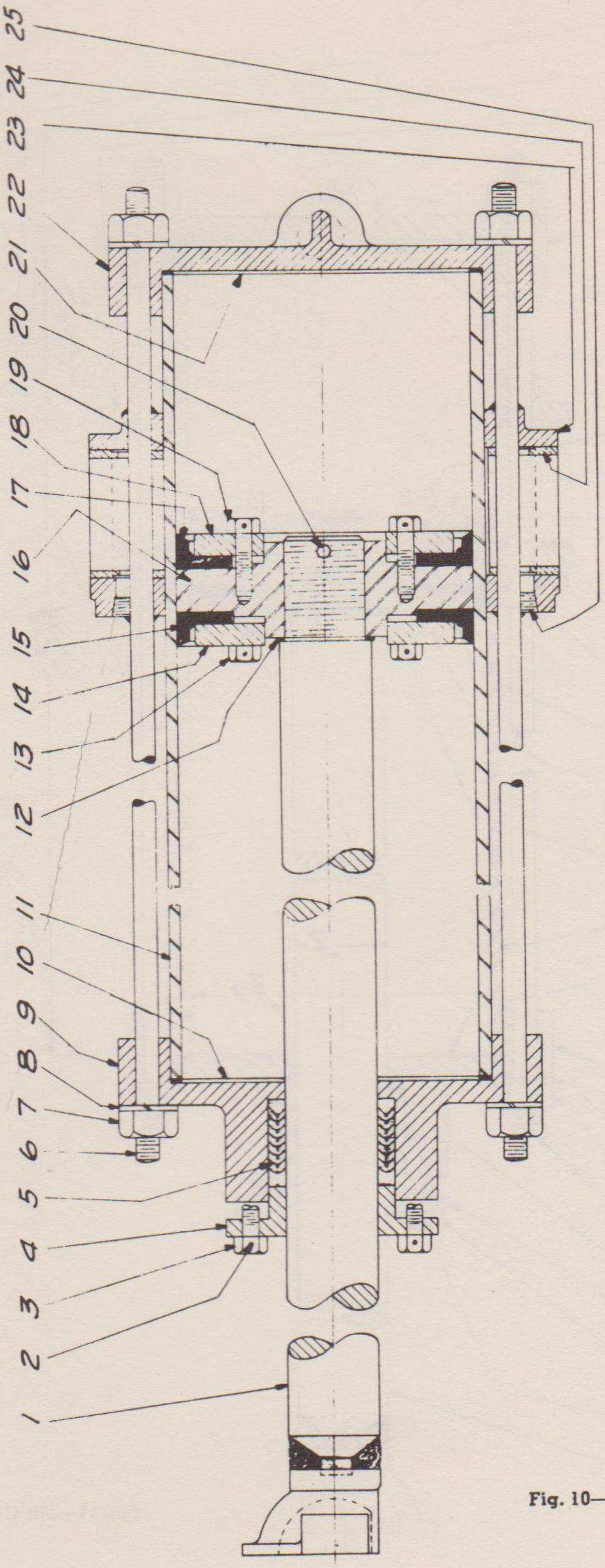

Fig. 10—Lift Cylinder—R. H.

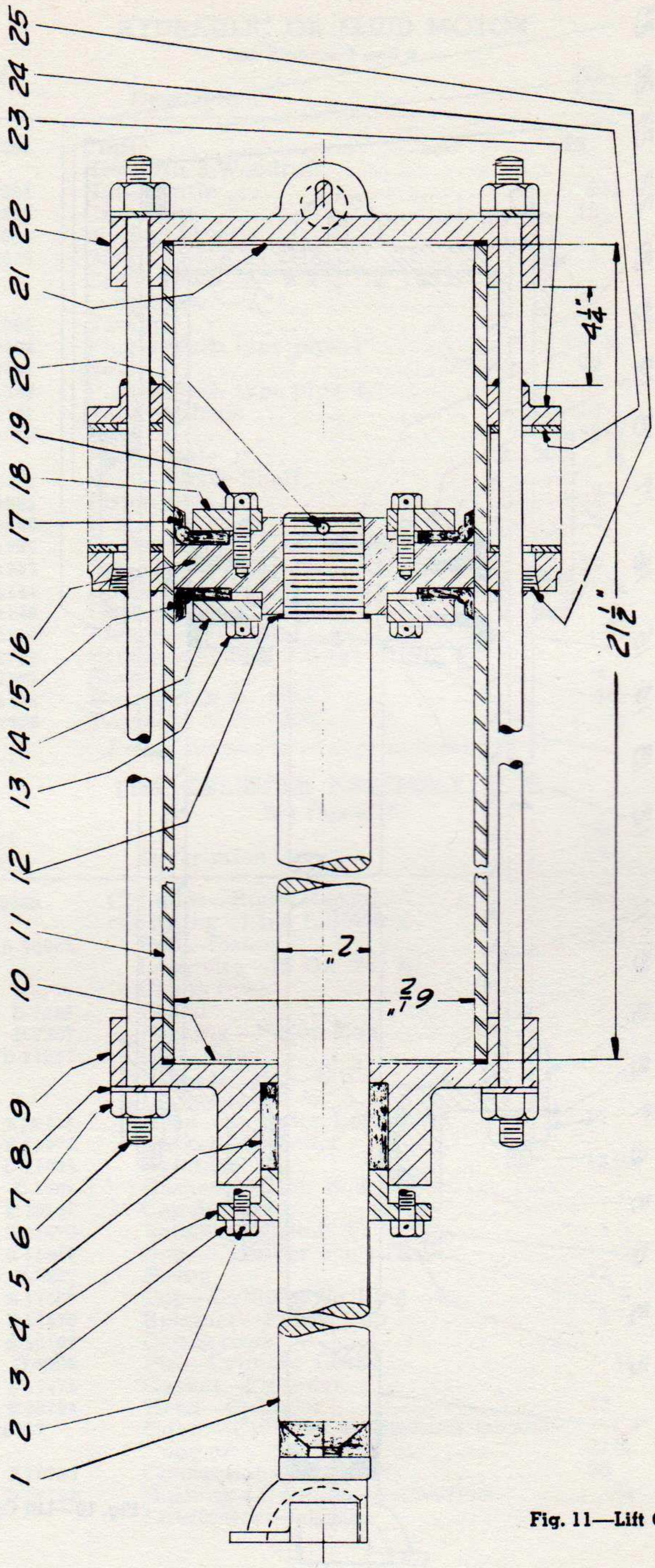

Fig. 11—Lift Cylinder—L.H.

LIFT CYLINDER ASSEMBLY, L. H.

See Figure 11

Item No.	Part No.	Description	Wt. Lbs.	Req.	Price
	SAB-20669	Cylinder—Lift, L. H.	140	1	$75.20
		consisting of the following:			
1	SA-20665	Rod—Piston	25½	1	8.25
2		Lockwire 16 Ga. 20" lg.		2	NC
3	D-8710	Cap Screws		2	.10
4	D-7268	Gland	1	1	1.15
5	D-7307	Packing—Piston Rod		1	4.00
6	D-21097	Bolt—Stay	¼	6	.35
7		Nut—½" Hex. U.S.S.	1/16	12	2.20C
8		Lockwasher—½"		12	.50C
9	B-26115	Head—Cylinder Right Hand	17	1	4.85
10	R-11475	Gasket—Cylinder		1	.15
11	D-21095	Cylinder	13½	1	12.95
12	D-7308	Gasket—Piston Rod		1	.05
13	R-10107	Cap Screws		4	.10
14	R-11470	Retainer—Piston Cup	4	1	1.70
15	R-11469	Cup—Cylinder Packing	⅓	1	3.40
16	H-7267	Piston	12	1	5.35
17	R-11469	Cup—Clinder Packing	⅓	1	3.40
18	R-11470	Retainer—Piston Cup	4	1	1.70
19	R-10107	Cap Screws		4	.10
20	D-8506	Pin—Cylinder Lock	¼	1	.15
21	R-11475	Gasket—Cylinder		1	.15
22	B-20734	Head—Cylinder	15	1	6.95
	SA-20667	Conn.—Cylinder & Bushing consist of:	21½	1	19.80
23	B-20733	Connection—Cylinder	20	1	NSS
24	D-20122	Bushing—Cylinder Connection	¾	2	1.10
25		Lubricator—Alemite		2	.15

LEANING WHEEL CYLINDER

See Figures 12 and 13

Item No.	Part No.	Description	Wt. Lbs.	Req.	Price
	SAB-20674	Cylinder—Leaning Wheel	42	1	$33.75
		consisting of the following:			
1	D-20211	Rod—Piston	7	1	2.95
2		Lockwire—16 Ga. 20" lg.		2	NC
3	D-8710	Cap Screw		2	.10
4	D-5302	Gland	1½	1	1.45
5	D-6065	Packing—Piston Rod (Garlock)	1/6	1	1.95
6	D-20212	Bolt—Stay	½	4	.35
7		Nut—½" Hex. U.S.S.	1/16	8	2.20C
8		Lockwasher—½"		8	.50C
9	B-5307	Head—Cylinder	10	1	3.95
10	D-5583	Gasket—Cylinder		1	.35
11	D-20210	Cylinder	8¾	1	3.95
12	D-5582	Gasket—Rod		1	.15
13	R-10107	Screw—Cap		4	.10
14	D-5301	Retainer—Piston Cup	1½	1	.70
15	D-5584	Cup—Cylinder Packing	⅛	1	1.80
16	H-5305	Piston	5	1	3.00
17	D-5584	Cup—Cylinder Packing	⅛	1	1.80
18	D-5301	Retainer—Piston Cup	1½	1	.70
19	R-10107	Cap Screw		4	.10
20	D-6066	Pin—Cylinder Locking	¼	1	.10
21	D-5583	Gasket—Cylinder		1	.15
22	B-6144	Head—Cylinder	8	1	2.40

Prices subject to change without notice

990620 O—52——27

PARTS LIST

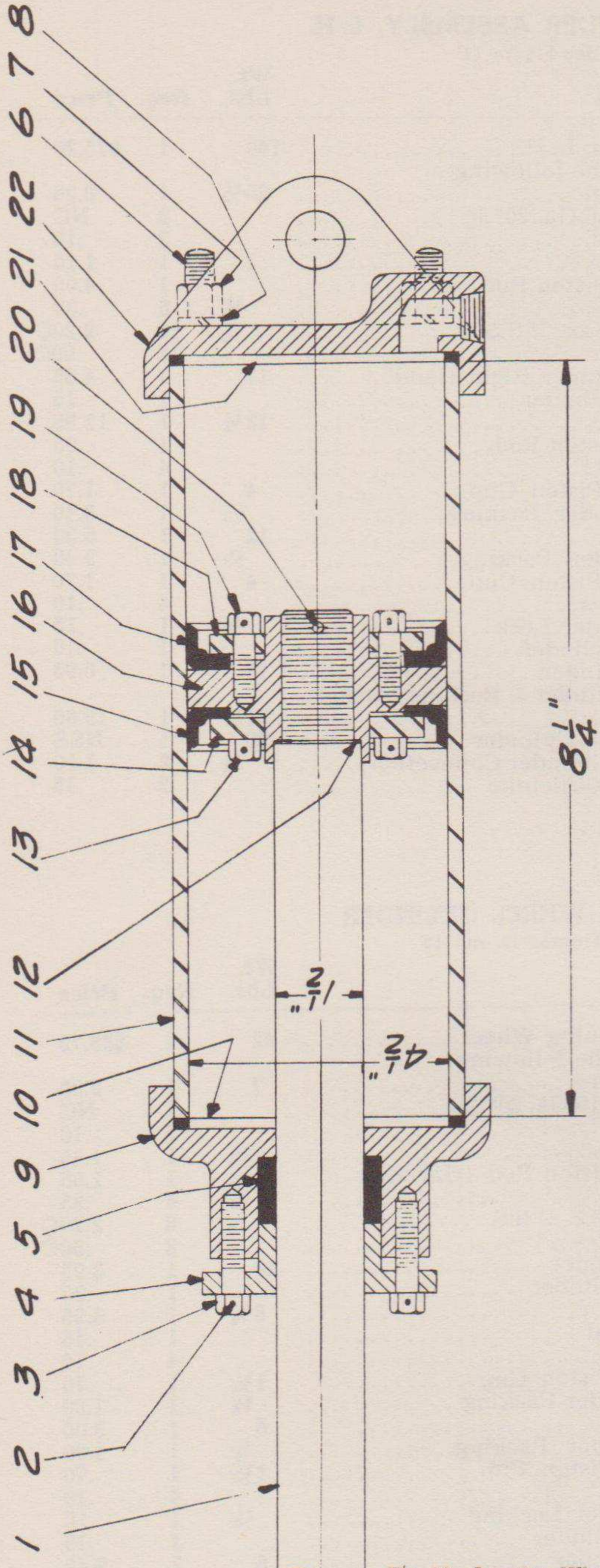

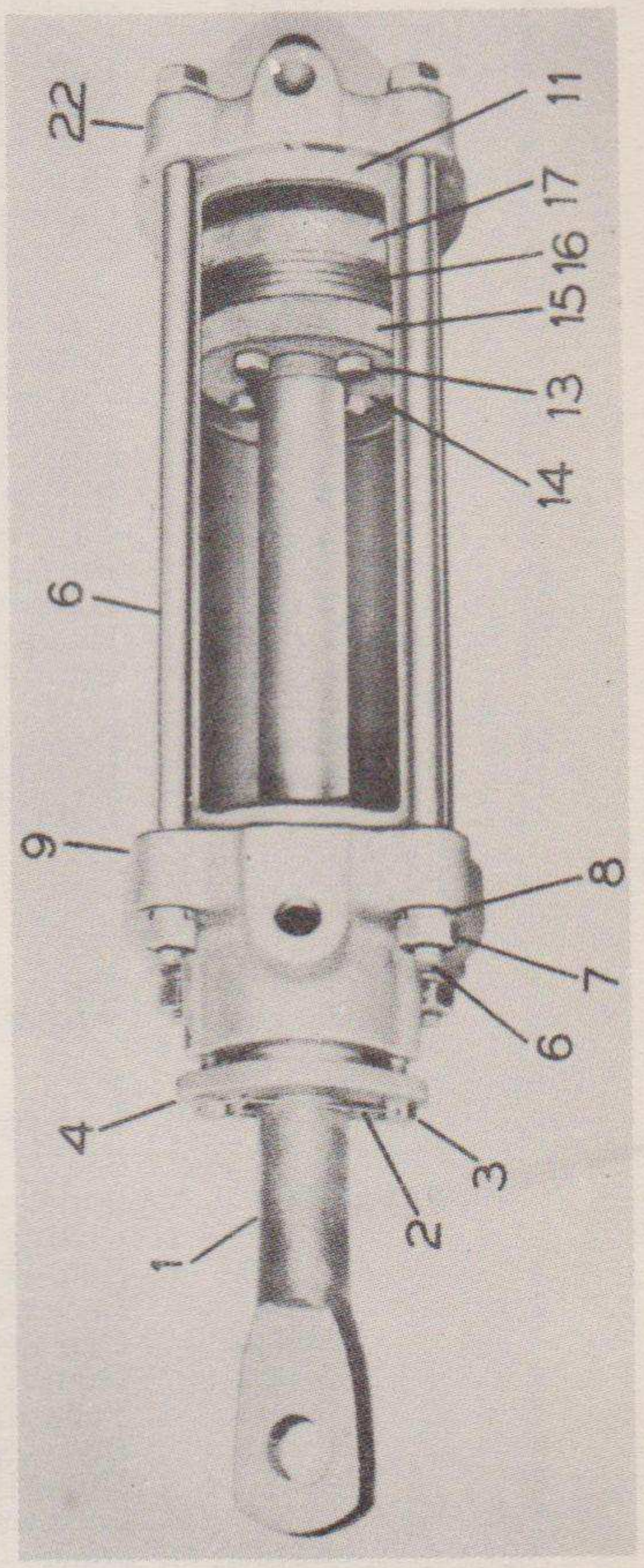

Fig. 12—Leaning Wheel Cylinder

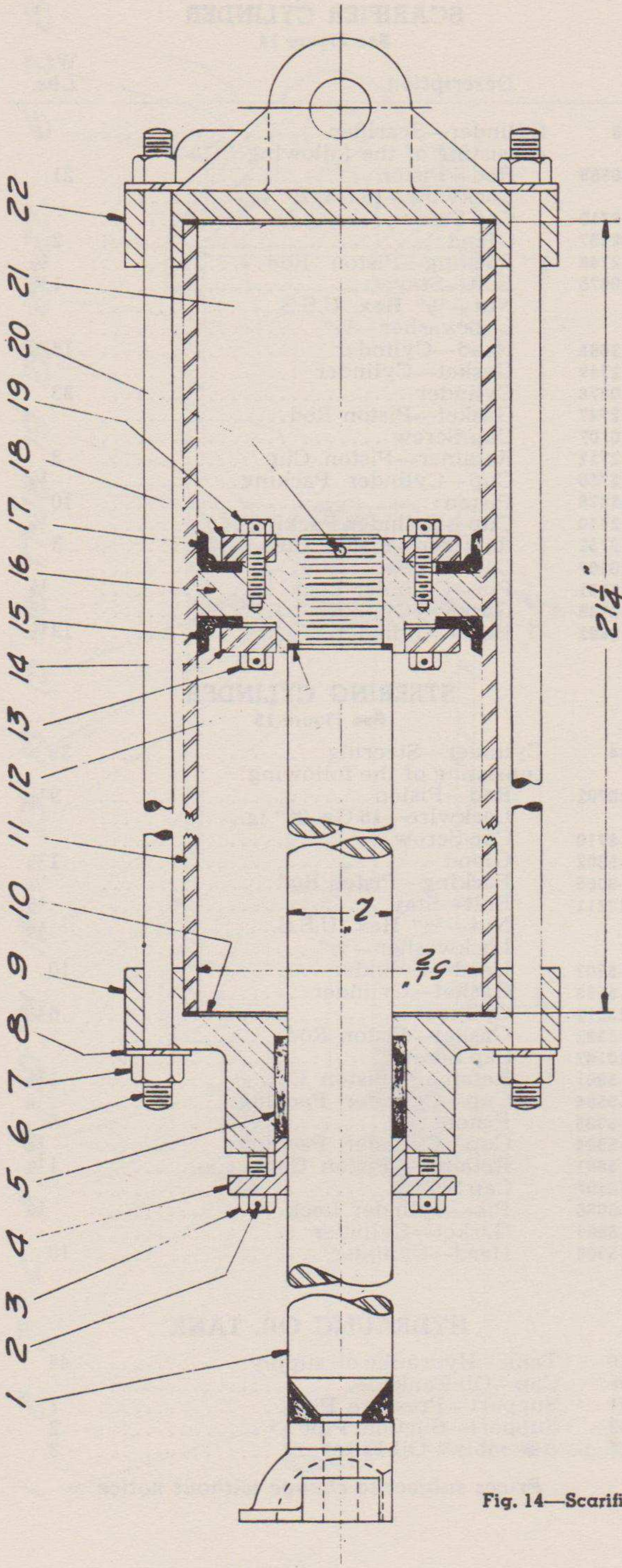

Fig. 14—Scarifier Cylinder

SCARIFIER CYLINDER

See Figure 14

Item No.	Part No.	Description	Wt. Lbs.	Req.	Price
	SAB-20888	Cylinder—Scarifier			$54.50
		consisting of the following:			
1	SA-20889	Rod—Piston	21	1	8.15
2		Lockwire—16 Ga. 20" lg.....		2	NC
3	D-8710	Cap Screw.....		2	.10
4	D-12697	Gland	2	1	1.40
5	D-12748	Packing—Piston Rod.....	½	1	3.40
6	D-20875	Bolt—Stay	1½	6	.30
7		Nut—½" Hex. U.S.S.....	1/16	12	2.20C
8		Lockwasher—½"		12	.50C
9	B-12695	Head—Cylinder	15¾	1	4.00
10	D-12749	Gasket—Cylinder		1	.20
11	D-20876	Cylinder	23	1	13.60
12	D-12747	Gasket—Piston Rod.....		1	.05
13	R-10107	Cap Screw		4	.10
14	D-12752	Retainer—Piston Cup.....	3	1	.95
15	D-12750	Cup—Cylinder Packing.....	¼	1	2.40
16	D-12696	Piston	10	1	4.15
17	D-12750	Cup—Cylinder Packing	¼	1	2.40
18	D-12752	Retainer—Piston Cup.....	3	1	.95
19	R-10107	Cap Screw.....		4	.10
20	D-12751	Pin—Cylinder Lock.....	¼	1	.15
21	D-12749	Gasket—Cylinder		1	.20
22	B-12692	Head—Cylinder	13½	1	7.90

STEERING CYLINDER

See Figure 15

	SAB-23264	Cylinder—Steering	39	1	$33.25
		consisting of the following:			
1	H-20702	Rod—Piston	9½	1	4.75
2		Lockwire—16 Ga. 20" lg.....		2	NC
3	D-8710	Cap Screw.....		2	.10
4	D-5302	Gland	1½	1	1.45
5	D-6065	Packing—Piston Rod.....	1/6	1	1.95
6	D-23211	Bolt—Stay	½	4	.30
7		Nut—½" Hex. U.S.S.....	1/16	8	2.20C
8		Lockwasher—½"		8	.50C
9	B-5307	Head—Cylinder	10	1	3.95
10	D-5583	Gasket—Cylinder		1	.35
11	D-23212	Cylinder	6½	1	2.80
12	D-5582	Gasket—Piston Rod.....		1	.15
13	R-10107	Cap Screw.....		4	.10
14	D-5301	Retainer—Piston Cup.....	1½	1	.70
15	D-5584	Cup—Cylinder Packing.....	⅛	1	1.80
16	H-5305	Piston	5	1	3.00
17	D-5584	Cup—Cylinder Packing.....	⅛	1	1.80
18	D-5301	Retainer—Piston Cup.....	1½	1	.70
19	R-10107	Cap Screw.....		4	.10
20	D-6066	Pin—Cylinder Lock.....	¼	1	.10
21	D-5583	Gasket—Cylinder		1	.35
22	B-5308	Head—Cylinder	10	1	2.90

HYDRAULIC OIL TANK

SAH-21210	Tank—Hydraulic oil supply.....	44	1		$17.35
R-11305	Cap—Oil Tank.....		1		1.40
D-21681	Support—Pressure Pipe.....	1	1	pr.	1.55
D-21682	Support—Suction Pipe.....	2	1	pr.	1.45
SAH-21977	Assembly—Oil Filter.....	3	1		6.00

Prices subject to change without notice

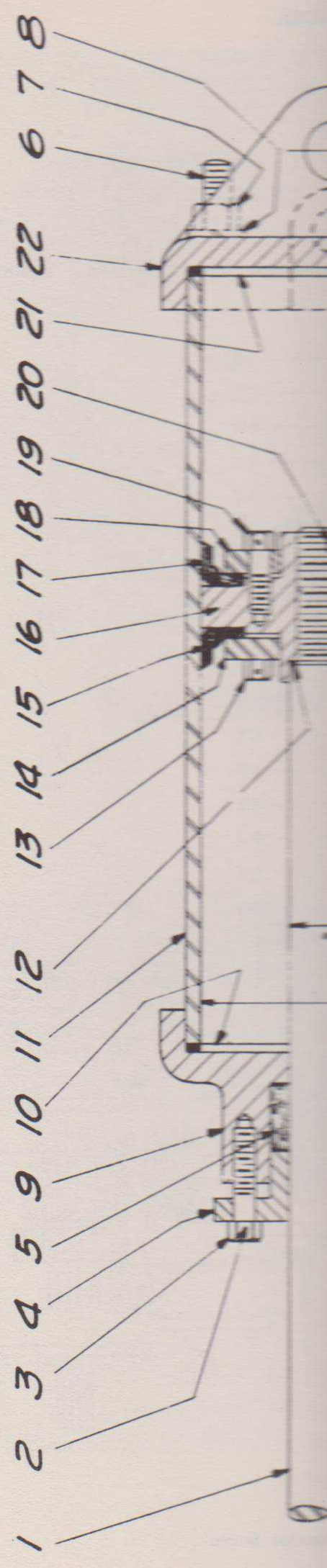

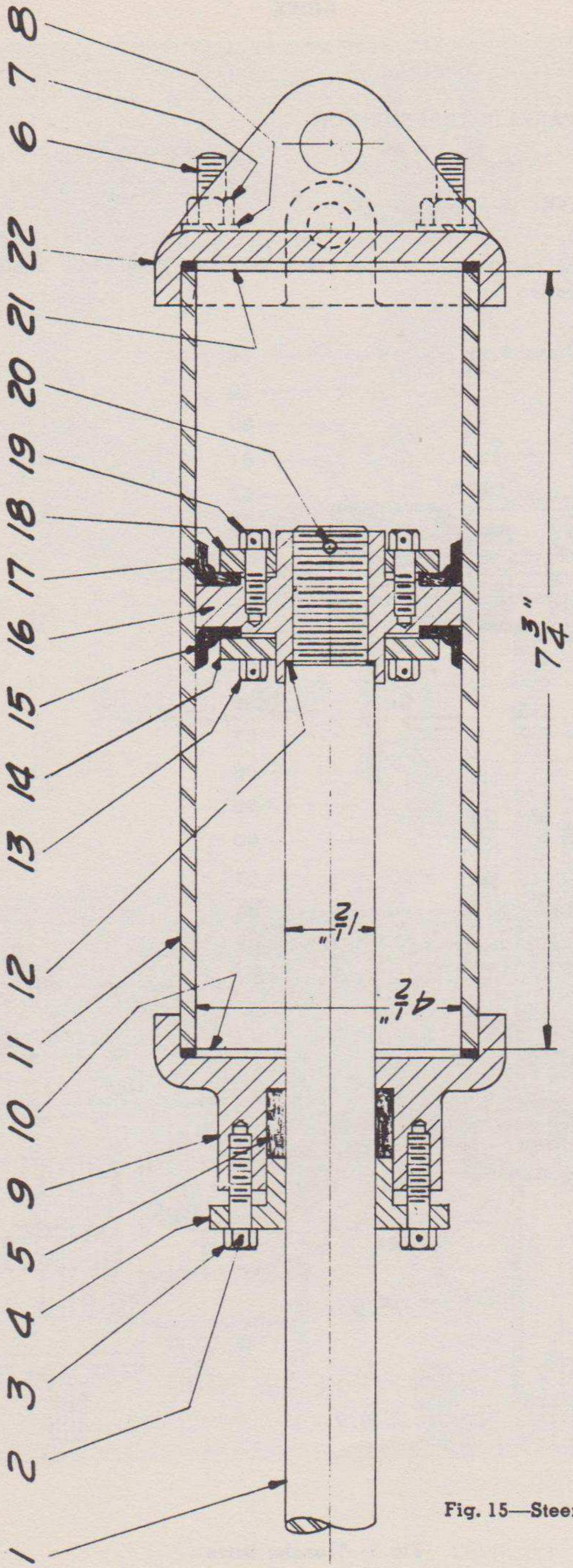

Fig. 15—Steering Cylinder

PARTS LIST

INDEX

TRANSMISSION 12
SHIFT FORKS 12
DIFFERENTIAL 6
HAND BRAKE PARTS IN TRANSMISSION 9
AXLES 6
OVERDRIVE 4
TRANSFER DRIVE 4
FINAL DRIVE 6

NOTE—In ordering parts for Transmission or Overdrive give EOA serial number shown on the front of the Overdrive Case.

Fig. 1—Transfer Drive

PARTS LIST

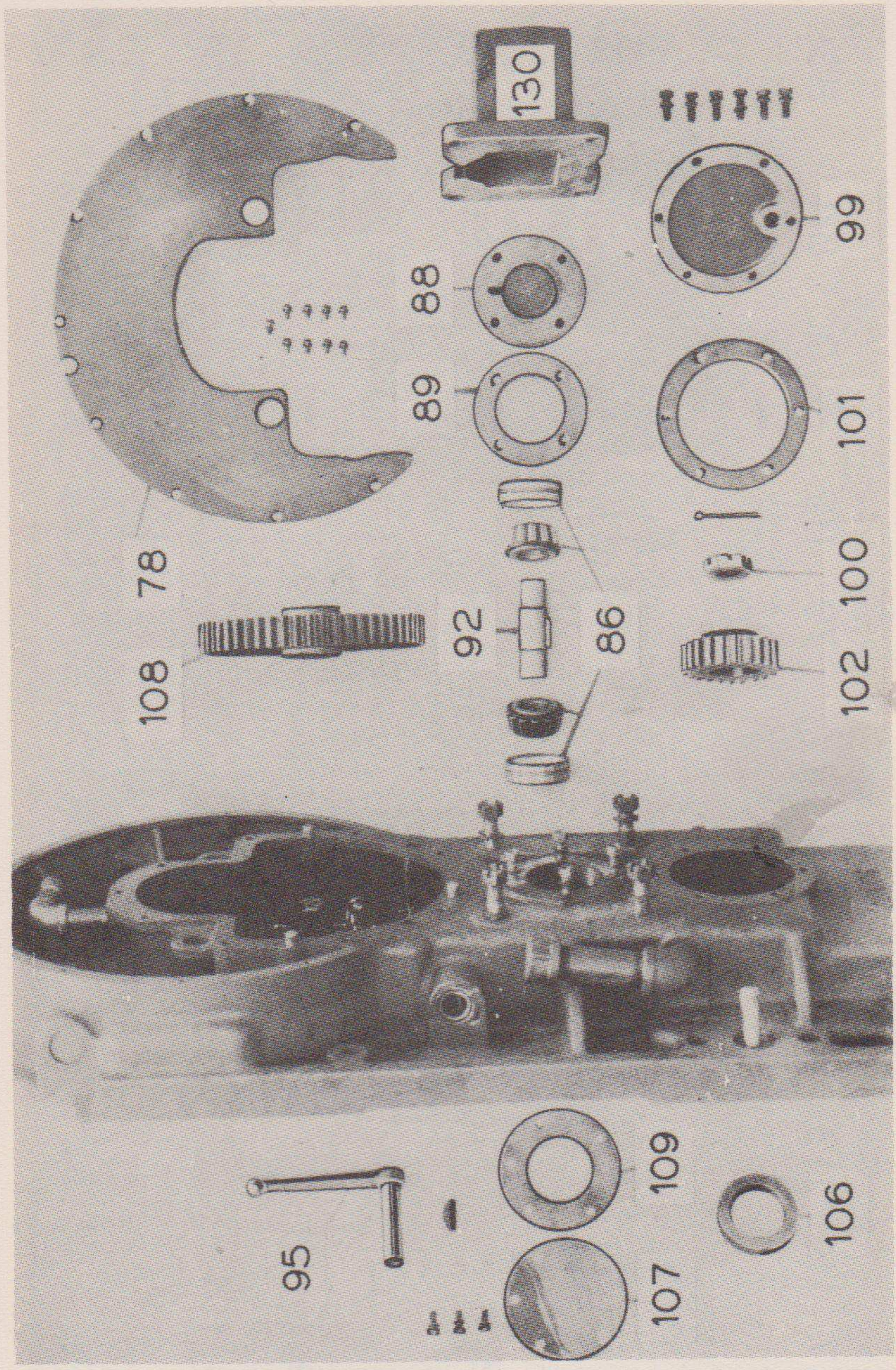

Fig. 2—Lower Idler Shaft

PARTS LIST

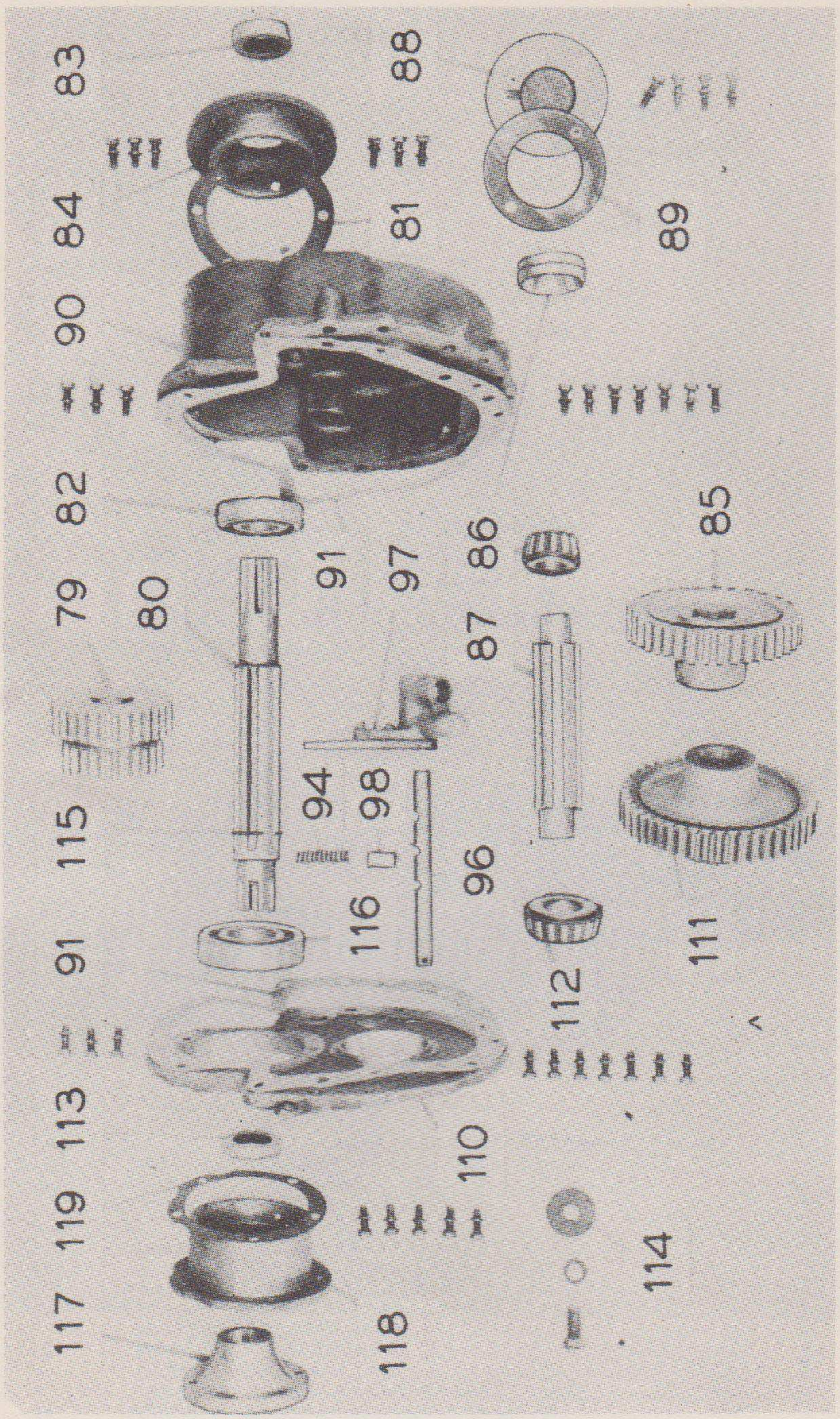

Fig. 3—Transfer Input and Upper Idler Shaft

TRANSFER DRIVE

Item No.	Part No.	Description	Wt. Lbs.	Req.	Price
78	A-3056	Cover—Transfer Housing Clutch Compartment ..... Use: 9 S220 Lock Washer, 9 S729 Machine Screw.	2¼	1	$1.75
79	A-3026	Gear—Transfer Drive Sliding—23 and 28 Teeth	8½	1	14.25
80	A-3014-D	Shaft—Transfer Drive Input.....	8	1	8.25
	B-1080	Snap Ring—Transfer Drive Input Shaft —Outer	⅛	1	.05
81	A-3032	Gasket—Top Cover Bearing Cage.....	1/16	1	.15
82	AS-5029	Bearing—Input Shaft—Front (SKF 6308 Ball Bearing)	1½	1	5.00
83	A-3018-A	Oil Seal—Input Shaft Front.....	⅛	1	1.75
84	A-3024	Cage—Top Cover Bearing..... Use: 6 S205 Lock Washer, 6 S903 Capscrew.	3½	1	2.00
85	A-3027	Gear—Overdrive—40 teeth.....	9	1	10.00
86	DS-5014	Bearing—Idler Shaft (Timken 3193-3120 Roller Bearing)	1¼	3	4.45
87	A-3013-A	Shaft—Upper Idler Gear.....	6½	1	5.00
88	A-3003-A	Cap—Transfer Housing Bearing..... Upper, Use: 4 S205 Lock Washer, 4 S923 Capscrew. Lower, Use: 4 A398, 4S138, 4 S205.	1¾	2	.75
89	A-3006	Shim—Transfer Housing Bearing Cap (.0313" Thick).....	1/16	4	.05
	A-3007	Shim—Transfer Housing Bearing Cap (.0156" Thick).....	1/16	4	.05
	A-3008	Shim—Transfer Housing Bearing Cap (.007" Thick).....	1/16	16	.10
90	A-3022-A	Cover—Transfer Housing Top..... Use: 10 S205 Lock Washer, 10 S903 Capscrew.	23	1	14.75
91	A-3031	Gasket—Transfer Housing Top.....	1/16	2	.25
92	A-3013-B	Shaft—Lower Idler Gear..... Use: 1 S2938 Woodruff Key.	1½	1	2.25
93	A-3035	Oil Seal—Shifter Arm.....	⅛	1	1.25
94	A-628-A	Spring—Shifter Rod Poppet.....	1/16	1	.10
95	A-692-A	Arm—Shifter ..... Use: 1 S3043 Woodruff Key.	1½	1	3.00
96	A-3033	Rod—Transfer Drive Shifter..... Use: 1 S836 Nut, 1 S1137 Setscrew.	1	1	.75
97	AS-3034	Fork—Transfer Drive Shifter.....	3	1	8.50
98	A-627	Poppet—Shifter Rod.....	⅛	1	.30
99	A-3025	Cover—Transfer Housing Lower..... Use: 6 S205 Lock Washer, 6 S903 Capscrew, 1 S1900 Pipe Plug.	2½	1	1.35
100	A-679	Slotted Nut—1¼"—Transmission Spline Shaft ..... Use: 1 S1403 Cotter Pin.	½	1	.35
101	A-3059	Gasket—Transfer Housing Lower Cover	1/16	1	.15
102	A-3010-A	Gear—Transfer Drive Lower—23 Teeth	3	1	5.50
103	A-3000-C	Housing—Transfer Gear (Order A-3000-D with 2 A-597 and 2 A-597-B).....	212	1	82.50
	A-3000-D	Housing—Transfer Gear..... Use: 10 S206 Lock Washer, 2 S844 Nut, 10 S1099 Capscrew, 1 S1444 Cotter Pin, 1 S1722 Elbow, 1 S1798 Nipple, 1 S1856 Pipe Cap, 1 S1901 Pipe Plug, 2 S3022 Plug.	220	1	82.50
104	A-3009-A	Gasket—Transfer Housing Lower.....	1/16	1	.15
105	A-618-A	Spacer—Transmission Spline Shaft.....	1	1	1.00
106	A-620-A	Oil Seal—Transmission Spline Shaft....	⅛	1	1.75

Prices subject to change without notice

TRANSFER DRIVE (Cont.)

Item No.	Part No.	Description	Lbs. Wt.	Req.	Price
107	A-3005-A	Cover—Lower Idler Bearing Inner..... Use: 3 S209 Lock Washer, 3 S946 Capscrew.	¾	1	$ .30
108	A-3011-B	Gear—Lower Idler—55 Teeth.....	14	1	19.50
109	A-3030	Gasket—Lower Idler Gear Inner Cover	1/16	1	.05
110	A-3021-A	Plate—Transfer Housing Top..... Use: 1 C169 Washer, 10 S205 Lock Washer, 1 S904 Capscrew, 10 S903 Capscrew, 2 S2931 Expansion Plug.	15½	1	7.75
111	A-3011-A	Gear—Upper Idler—45 Teeth.....	12	1	13.50
112	AS-5028	Bearing—Idler Shaft (Timken 3774-3720 Roller Bearing)	2	1	6.10
113	A-3019-A	Oil Seal—Input Shaft Rear.....	⅛	1	1.25
114	A-617	Washer—Input Shaft Coupling..... Use: 1 S201 Lock Washer, 1 S995 Capscrew.	⅛	1	.15
115	A-3028-A	Snap Ring—Input Shaft.....	⅛	1	.50
116	AS-5030	Bearing—Input Shaft—Rear (SKF 6310 Ball Bearing).....	2¼	1	7.30
117	A-3016-F	Coupling—Input Shaft	3½	1	11.00
118	A-3023	Plate—Top Bearing Cage..... Use: 5 S205 Lock Washer, 5 S903 Capscrew.	6¼	1	2.75
119	A-3048	Gasket—Top Plate Bearing Cage.....	1/16	1	.15
	A-398	Stud—⅜" x 1½" (Used with the lower A3003-A) ..... Use: 1 S138 Nut, 1 S205 Lock Washer.	¼	4	.05
	A-597	Pin—Dowel (Top of Transfer Drive to Engine)	¼	2	.10
	A-597-B	Pin—Dowel (Bottom of Transfer Drive to Main Frame) ..... (Unit Serial No. 2059 and up).	¼	2	.15
	A-601-A	Pin—Dowel ..... 3 each used with A-3021-A and A-3022-A.	⅛	6	.15
	A-3049	Cap—Breather ..... Use: 1 S1783 Elbow, 2 S2681 Nipple, 1 S2988 Sponge.	⅛	1	.25
	A-3053-A	Support—Power Unit Front.....	20	1	4.50
	A-3054	Block—Power Unit Front Support.....	¼	4	.40
	A-3055	Stud—Power Unit Front Support..... Use: 1 S201 Lock Washer, 1 S832 Nut, 1 S1400 Cotter Pin.	¼	4	.20
	C-169	Washer—Transfer Housing Top Plate Copper	1/16	1	.05
	DS-1319	Wrench—Rear Axle Nut Socket.....		1	3.00
	D-1321	Handle—Rear Axle Nut Socket Wrench		1	.45

FINAL DRIVE

Item No.	Part No.	Description	Wt. Lbs.	Req.	Price
1	AS-1295-A	Assembly—Differential Lock Hub..... Unit Serial No. 1000-2871—USCASR1295B	47	1	$35.00
	ASR-1295-B	Assembly—Differential Lock Hub..... Unit Serial No. 2872-2999 and 13001-14402		1	36.50
4	A-659-A	Housing—Left Differential (Order A-659-D) Unit Serial No. 1000-2871			
	A-659-D	Housing—Left Differential..... Unit Serial No. 2872-2999 and 13001-14402	36	1	29.50
	A-659-C	Housing—Left Differential ..... Unit Serial No. 14403 and up		1	59.70

Prices subject to change without notice

PARTS LIST

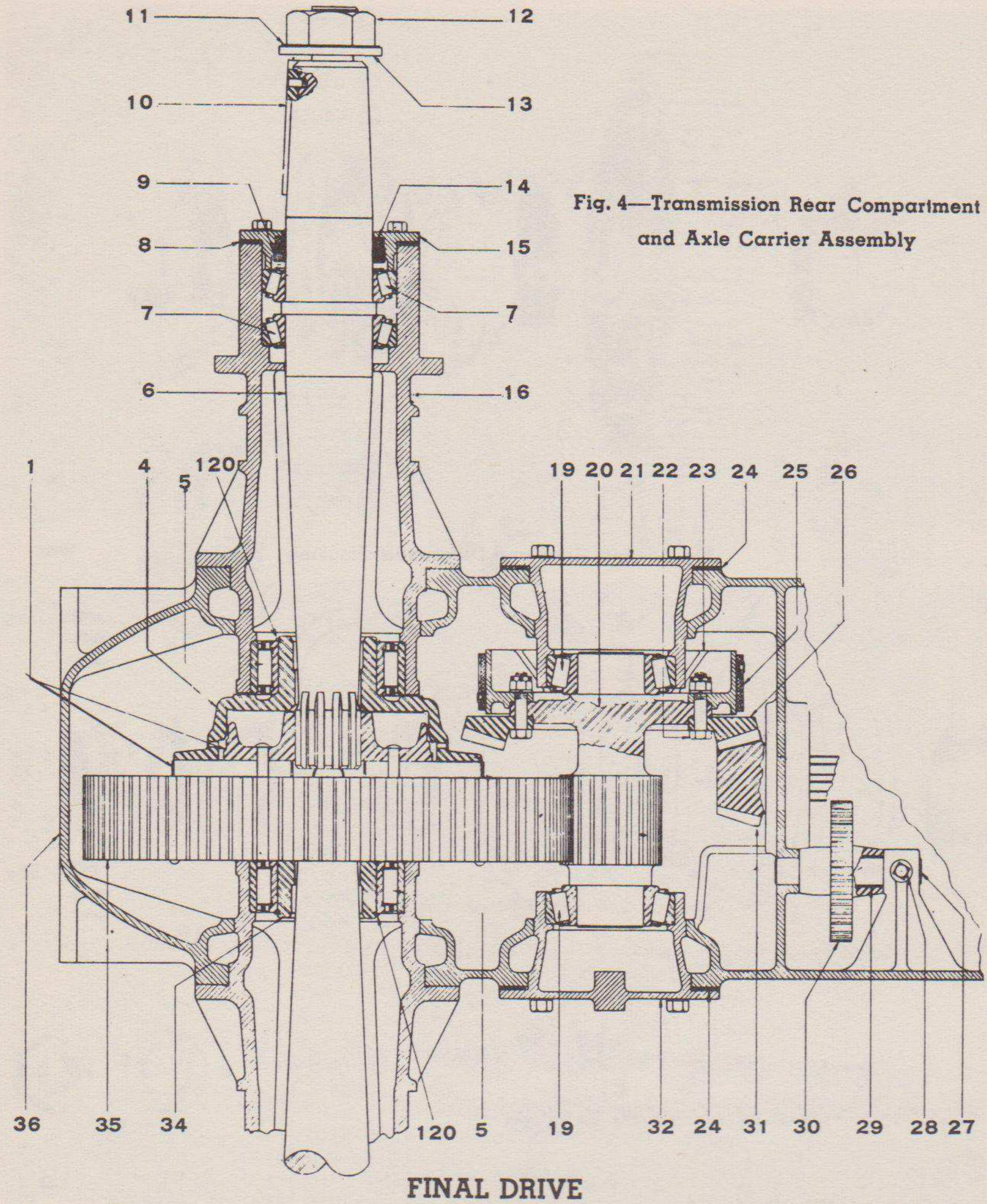

Fig. 4—Transmission Rear Compartment and Axle Carrier Assembly

FINAL DRIVE

Item No.	*Part No.*	*Description*	*Wt. Lbs.*	*Req.*	*Price*
	A-1297-A	Dowel—Differential Lock Pin..... Unit Serial No. 2872 and up		4	.20
5	AS-5015-A	Bearing—Differential Roller.....	13	2	21.45
6	A-699-E	Axle—Rear	92	2	52.50
7	AS-5012-A	Bearing—Rear Axle Roller (Timken 52400-52618 Roller Brg.).....	6	4	19.40
8	A-707-A	Shim—Rear Axle Bearing Cage (.0625" Thick)	1/16	4	.10
	A-708-A	Shim—Rear Axle Bearing Cage (.0313" Thick)	1/16	4	.10
	A-709-A	Shim—Rear Axle Bearing Cage (.0156" Thick)	1/16	8	.10
	A-710-A	Shim—Rear Axle Bearing Cage (.007" Thick)	1/16	12	.10

Prices subject to change without notice

PARTS LIST

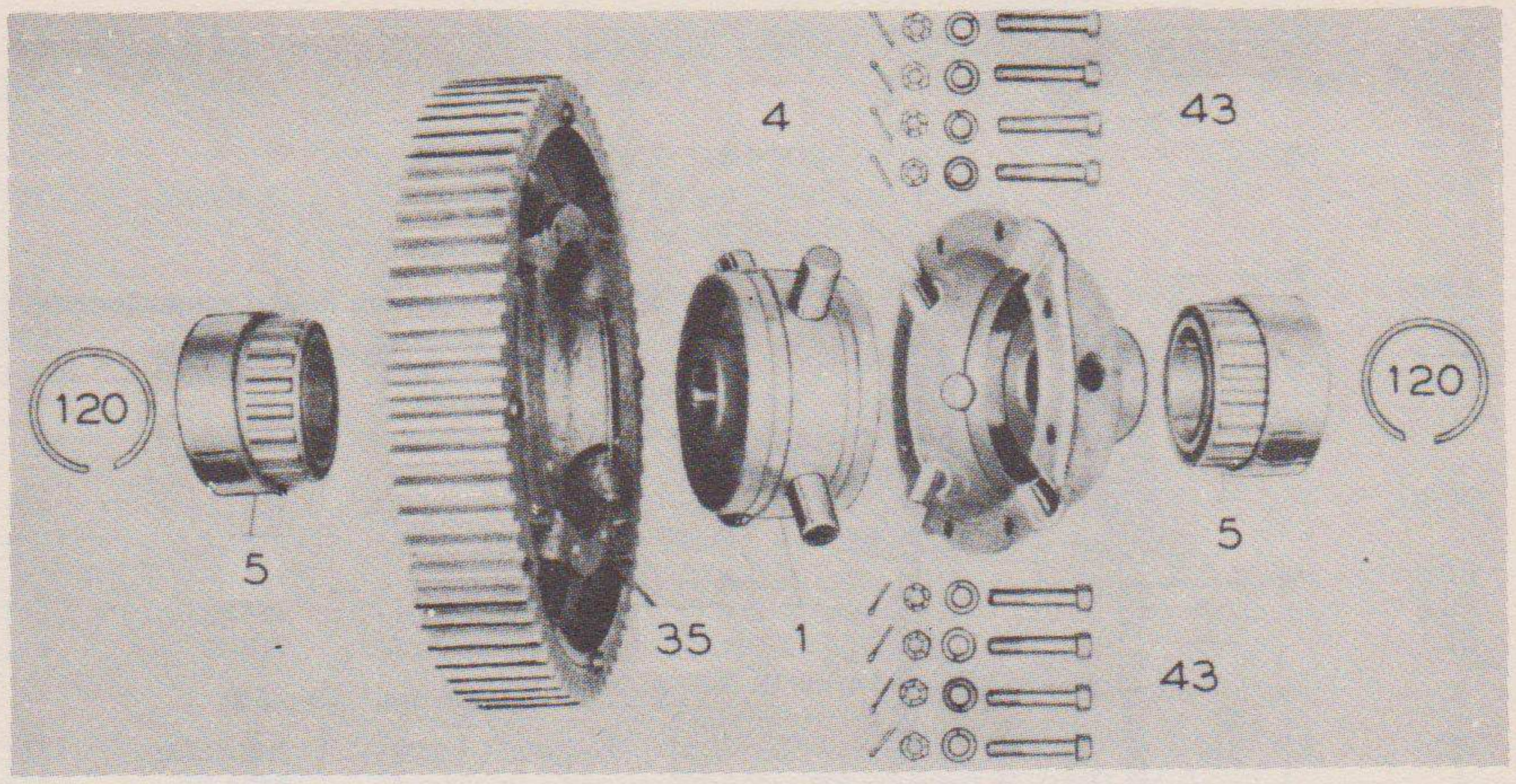

Fig. 5—Bull Gear and Differential Housing

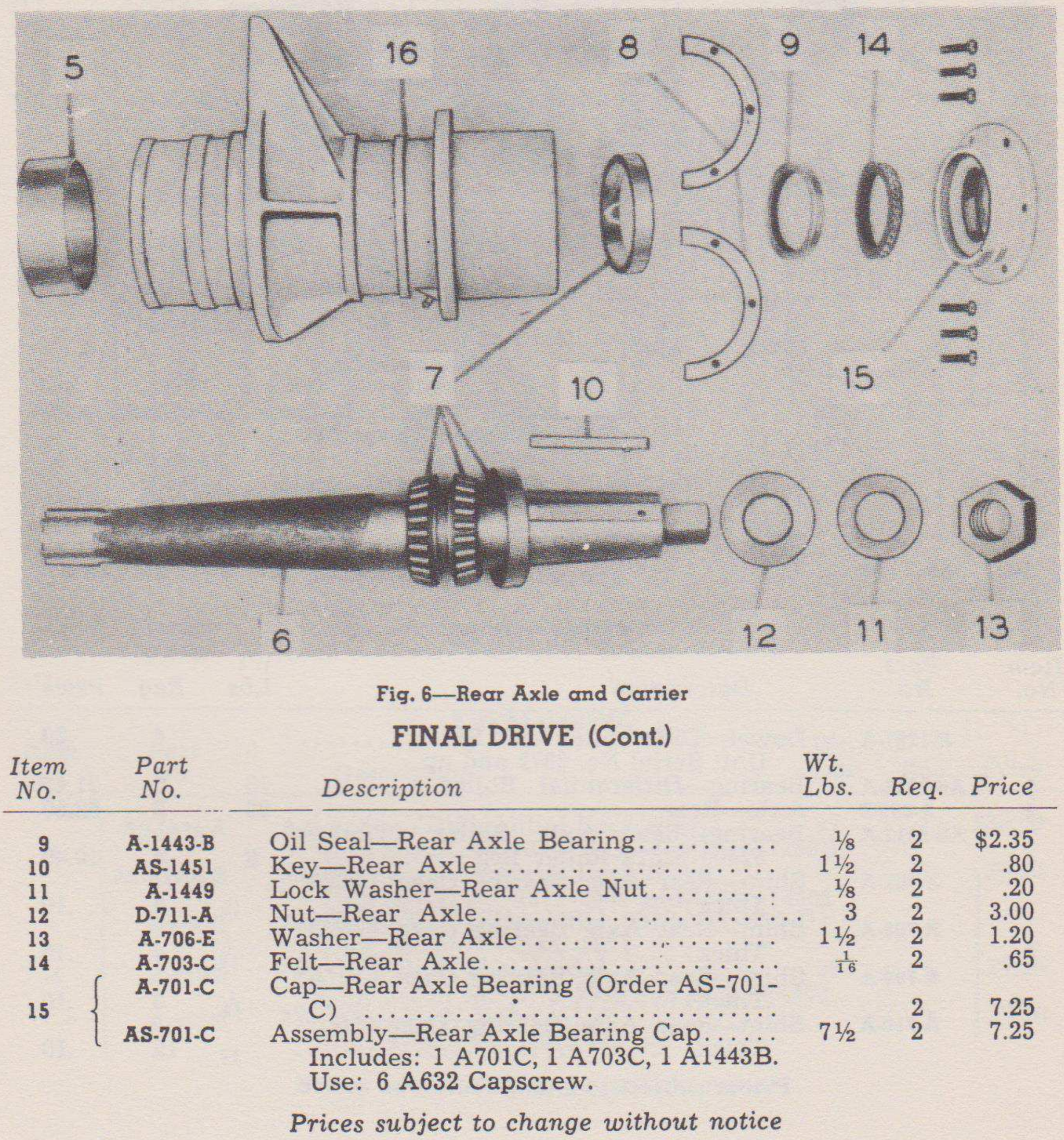

Fig. 6—Rear Axle and Carrier

FINAL DRIVE (Cont.)

Item No.	Part No.	Description	Wt. Lbs.	Req.	Price
9	A-1443-B	Oil Seal—Rear Axle Bearing	1/8	2	$2.35
10	AS-1451	Key—Rear Axle	1½	2	.80
11	A-1449	Lock Washer—Rear Axle Nut	1/8	2	.20
12	D-711-A	Nut—Rear Axle	3	2	3.00
13	A-706-E	Washer—Rear Axle	1½	2	1.20
14	A-703-C	Felt—Rear Axle	1/16	2	.65
15	A-701-C	Cap—Rear Axle Bearing (Order AS-701-C)		2	7.25
	AS-701-C	Assembly—Rear Axle Bearing Cap	7½	2	7.25
		Includes: 1 A701C, 1 A703C, 1 A1443B. Use: 6 A632 Capscrew.			

Prices subject to change without notice

PARTS LIST

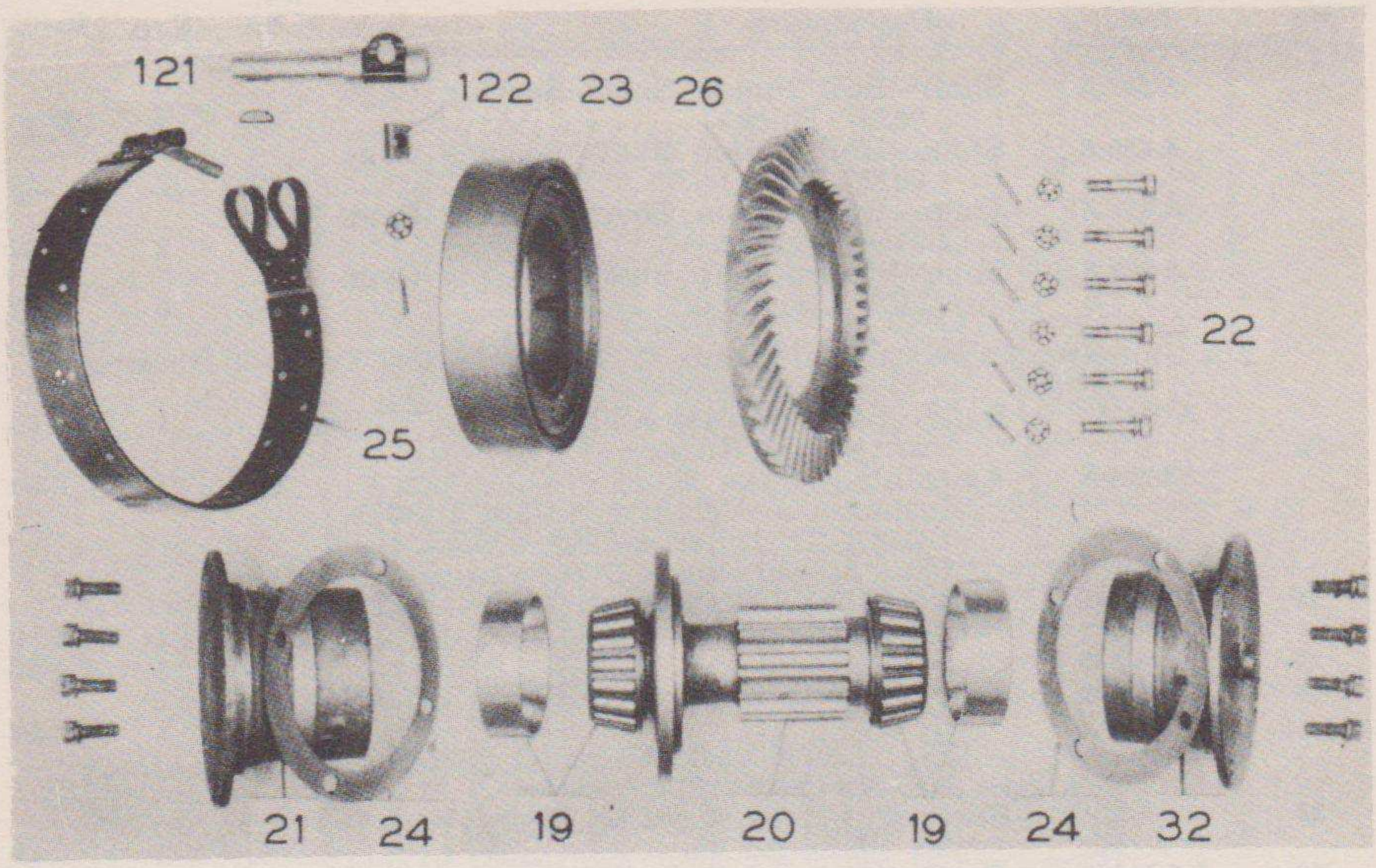

Fig. 7—Bull Pinion Shaft

Item No.	Part No.	Description	Wt. Lbs.	Req.	Price
16	A-700-E	Carrier—Rear Axle (Unit Serial No. 1000-1143) ..... Use: 8 S206 Lock Washer, 6 S996 Capscrew, 2 S997 Capscrew, 1 S1653 Fitting, 1 S1921 Pipe Plug.	127	2	$31.50
	A-700-H	Carrier—Rear Axle (Unit Serial No. 1144 and up) ..... Use: 2 S201 Lock Washer, 8 S206 Lock Washer, 2 S992 Capscrew, 8 S996 Capscrew, 1 S1653 Elbow, 1 S1921 Plug.	132	2	30.00
19	AS-5011	Bearing—Bull Pinion Tapered Roller (Timken 748S-742) ..... (Unit Serial No. 1000-1267).	7¾	2	19.40
	AS-5011-B	Bearing—Bull Pinion Roller (Timken 6461-6420) ..... (Unit Serial No. 1268 and up).	9½	2	15.45
20	AR-643-C	Bull Pinion and Shaft.....	49	1	41.50
	AS-643-G	Assembly—Bull Pinion and Shaft..... Includes: 1 AR643C, 1 A644E, 6 A647, 1 A773A, 6 S134, 6 S237, 6 S1401.	90	1	81.25
21	A-648	Cage—Bull Pinion Shaft Bearing—Left (Unit Serial No. 1000-1267). Use: 4 S201 Lock Washer, 4 S987 Capscrew.	21	1	5.20
	A-648-C	Cage—Bull Pinion Shaft Bearing—Left (Unit Serial No. 1268 and up). Use: 4 S201 Lock Washer, 4 S987 Capscrew.	21	1	5.50
22	A-647	Bolt—Drive Bevel Gear..... Use: 1 S134 Nut, 1 S237 Lock Washer, 1 S1401 Cotter Pin.	¼	6	.35
23	A-773-A	Drum—Brake	14½	1	4.50

Prices subject to change without notice

PARTS LIST

Item No.	Part No.	Description	Wt. Lbs.	Req.	Price
24	A-649-A	Shim—Bull Pinion Shaft Bearing Cage (.0625" Thick)	1/16	2	$ .30
	A-650-A	Shim—Bull Pinion Shaft Bearing Cage (.0313" Thick)	1/16	2	.25
	A-651-A	Shim—Bull Pinion Shaft Bearing Cage (.0156" Thick)	1/16	2	.20
	A-652-A	Shim—Bull Pinion Shaft Bearing Cage (.007" Thick)	1/16	6	.20
		For Unit Number see "Serial Number" on front side of Transfer Housing.			
25	A-774-A	Band—Brake (Order AS-774-A)		1	6.50
		Use: 4 S554 Rivet.			
	AS-774-A	Assembly—Brake Band	4½	1	6.50
		Includes: 1 A774A, 1 A775A, 1 A779, 1 A928, 22 C771A, 4 S509, 4 S554. Use: 1 S136 Nut, 1 S1400 Cotter Pin.			
26	A-644-E	Gear—Drive Bevel—48 Teeth—Spiral (13¾" Diameter)	25	1	34.00
27	A-615	Shaft—Reverse	2½	1	1.50
28	A-636	Bolt—Reverse Shaft (⅜"-16 x 3" Drilled Head)	¼	1	.10
		Use: 1 S205 Lock Washer, 1 S836 Nut, 1 S1410 Cotter Pin.			
29	A-614	Bushing — Reverse Idler Gear (With AS-1021)	¼	2	.35
30	A-1021	Gear—Reverse Idler (Order AS1021)		1	18.00
	AS-1021	Assembly—Reverse Idler Gear	7¼	1	18.00
		Includes: 2 A614, 1 A1021.			
31	A-602-E	Shaft—Bevel Pinion	20	1	28.50
32	A-645	Cage—Bull Pinion Shaft Bearing—Right (Order AS-645)		1	5.45
	AS-645	Assembly—Bull Pinion Shaft Bearing Cage—Right	19	1	5.45
		(Unit Serial No. 1000-1267). Includes: 1 A645, 1 A902. Use: 4 S201 Lock Washer, 4 S987 Capscrew.			
	A-645-D	Cage—Bull Pinion Shaft Bearing—Right (Unit Serial No. 1268 and up). AS-645-C can be used for repairs. Use: 4 S201 Lock Washer, 4 S987 Capscrew.	18½	1	5.50
34	A-658-B	Housing—Right Differential (Order AS-657-B) Unit Serial No. 1000-2999 and 13001-14402			
	A-658-C	Housing—Right Differential Unit Serial No. 14403 and up		1	39.50
35	A-657	Gear—Bull (Order AS-657-B or AS-657-C) Unit Serial No. 1000 and up			
	AS-657-B	Assembly—Right Differential Housing and Bull Gear	173	1	131.00
		Unit Serial No. 1000-2999 and 13001-14402 Includes: 1 A657, 1 A658B, 4 S588			
	AS-657-C	Assembly—Right Bull Gear and Spider		1	99.00
		Unit Serial No. 14403 and up Includes: 1 A657, 1 A1140, 4 S588			
	A-1140	Spider—Bull Gear (Order AS-657-C). Unit Serial No. 14403 and up			
120	A-1028	Snap Ring—Differential Bearing	¼	2	.20
36	A-596-A	Frame—Main	475	1	83.75
		Use: 1 S1900 Pipe Plug, 2 S1912 Plug.			
	A-632	Capscrew—Bearing Cage (Rear Axle)	⅛	12	.10
	A-775-A	Lining—Brake	1	1	1.30
	A-776-A	Lever—Brake—Inside	3	1	3.00
		Use: 1 S3043 Woodruff Key.			
	A-779	Rod—Brake Adjusting	½	1	1.00
	A-781-A	Washer—Brake Adjusting Rod	¼	1	.50

Prices subject to change without notice

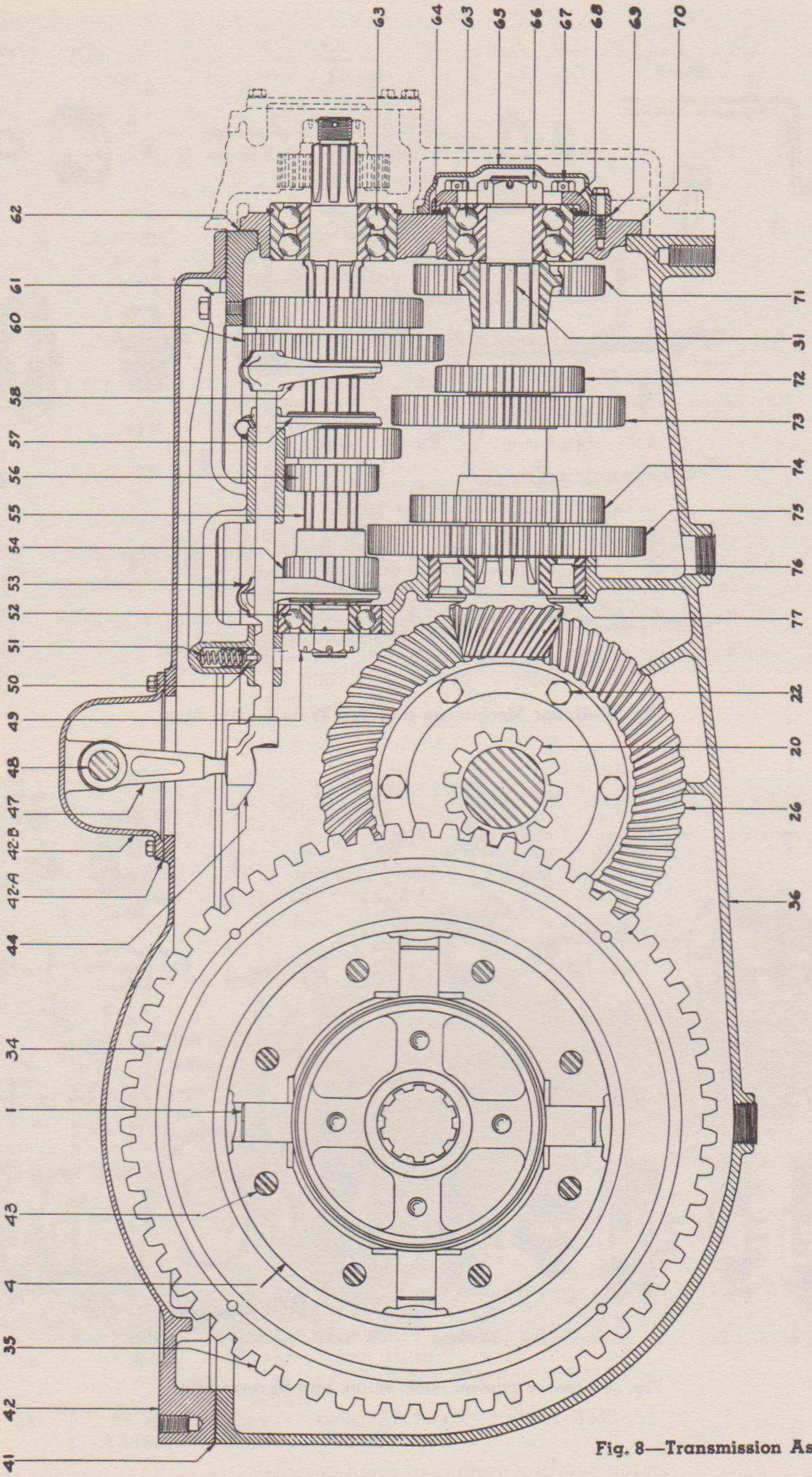

Fig. 8—Transmission Assembly

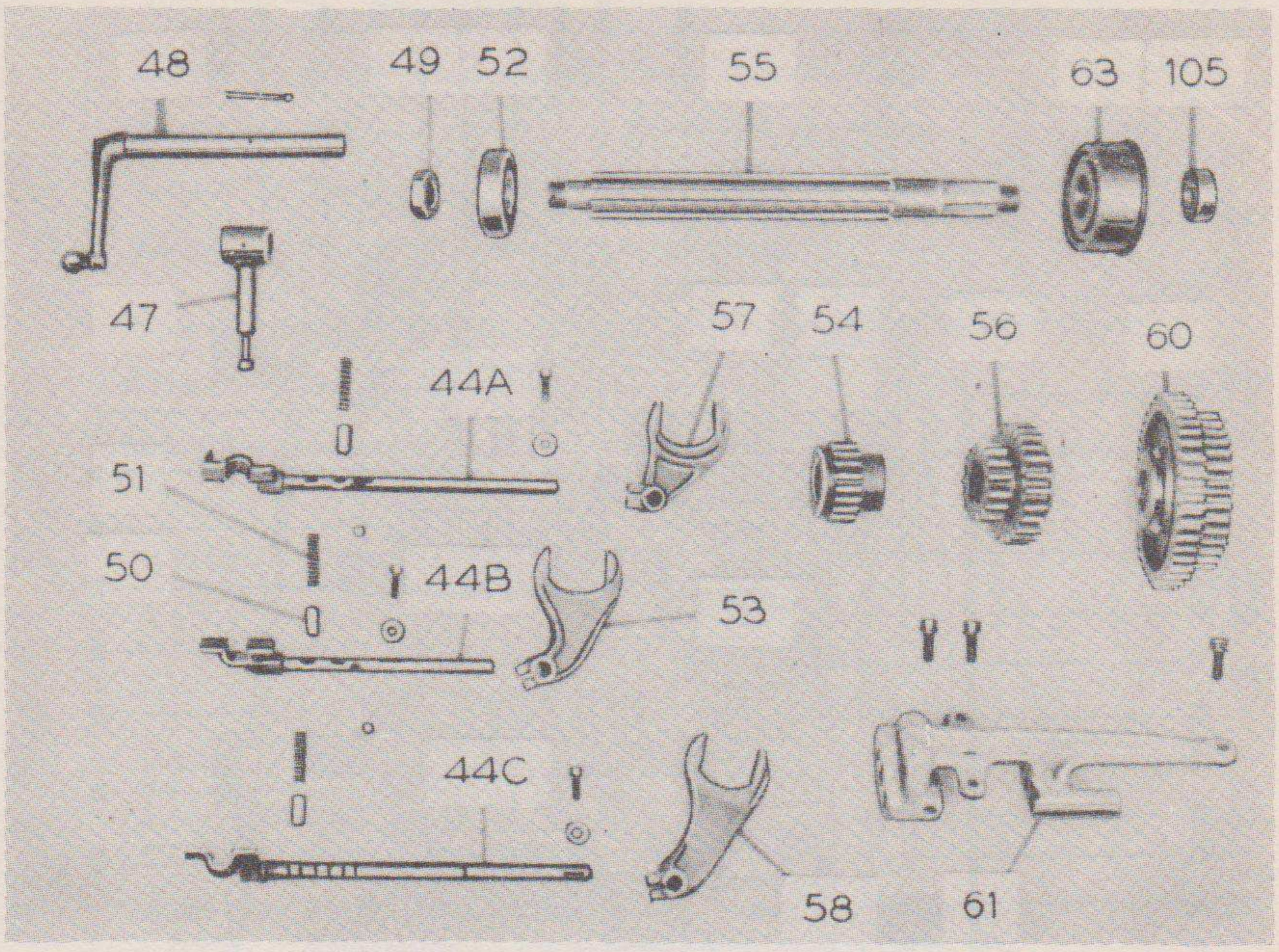

Fig. 9—Shifter Mechanism and Top Transmission Shaft

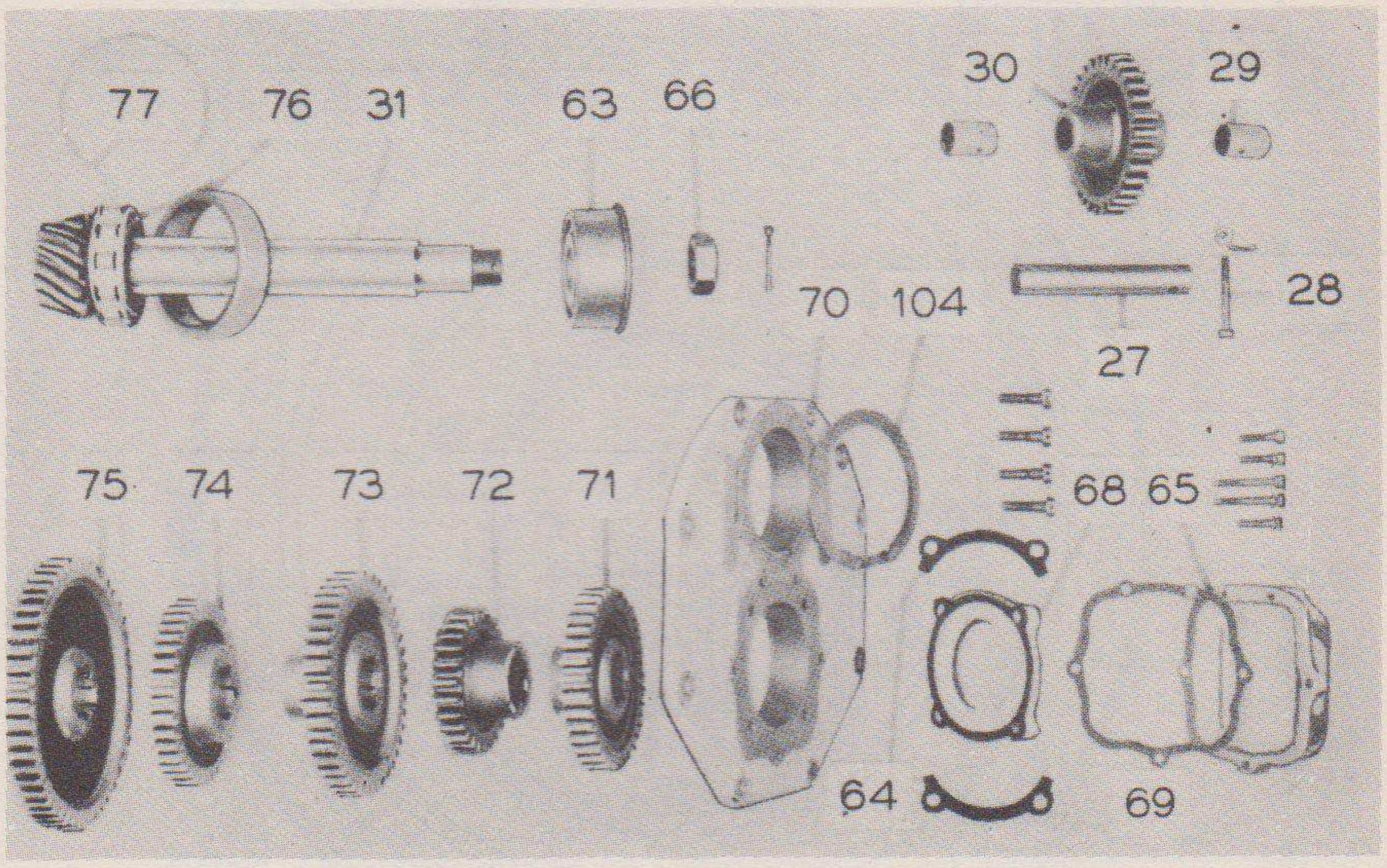

Fig. 10—Lower Transmission Shafts and Reverse Idler

FINAL DRIVE (Cont.)

Item No.	Part No.	Description	Wt. Lbs.	Req.	Price
	A-928	End—Brake Band Use: 4 S509 Rivet.	3/4	1	1.00
	C-771-A	Rivet—Brake Lining	1/16	22	.01

For Unit Number see "Serial Number" on front side of Transfer Housing.

TRANSMISSION

See Figures 7, 8, 9, 10

41	A-598-A	Gasket—Main Frame	1/16	1	$ .50
	A-686	Gasket—Hand Hole Cover	1/16	1	.05
	A-685	Cover—Hand Hole Use H-5205 lockwashers and 4-5985 capscrews	1/8	1	.25
	A-3050-A	Cover—Transmission (Order ASR-3050-D) Unit Serial No. 1000-1143			
42	A-3050-B	Cover—Transmission (Order ASR-3050-D) Unit Serial No. 1144-2726			
	A-3050-C	Cover—Transmission (Order ASR-3050-D) Unit Serial No. 2727-2999 & 13001-13380			
	A-3050-D	Cover—Transmission Unit Serial No. 13381 and up Use: 15 S201 Lock Washer, 13 S922 Capscrew, 2 S3068 Capscrew.		1	56.00
	ASR-3050-D	Assembly—Transmission Cover, Breather Hole Cover; and Gear Shifter Lever Housing (Will replace all Transmission Covers for repairs.) Includes: 1 A3050D, 1 A3057, 1 B139A, 1 D 3057A, 1 D3075, 7 S205, 3 S220, 7 S903, 3 S1027, 1 S1905. Use: 15 S201 Lock Washer, 13 S922 Capscrew, 2 S3068 Capscrew.		1	60.00
42A	D-3075	Gasket—Gear Shifter Lever Housing Unit Serial No. 13381 and up	1/16	1	.05
42B	D-3057-A	Housing—Gear Shifter Lever Unit Serial No. 13381 and up Use: 7 S205 Lock Washer, 7 S903 Capscrew, 1 S1905 Pipe Plug.		1	4.50
43	A-660	Bolt—Differential Housing Unit Serial No. 1000-14402 Use: 1 S116 Nut, 1 S206 Lock Washer, 1 S1400 Cotter Pin.	1/2	8	.60
	A-660-A	Bolt—Differential Housing Unit Serial No. 14403 and up Use: 1 S866 Nut, 1 S1409 Cotter Pin		8	.75
44	AS-1622-A	Rod—Right Shifter (Unit Serial No. 1000-2036)	2 1/2	1	2.50
	AS-1626-B	Rod—Right Shifter (Unit Serial No. 2037 and up)	2 1/4	1	3.60
	AS-1624-A	Rod—Left Shifter (Unit Serial No. 1000-2036)	2	1	2.50
	AS-1624-B	Rod—Left Shifter (Unit Serial No. 2037 and up)	2 1/4	1	3.85
	AS-1627-A	Rod—Center Shifter (Unit Serial No. 1000-2036) Use: 2 S2951 Steel Ball.	1 1/2	1	2.50
	AS-1627-B	Rod—Center Shifter (Unit Serial No. 2037 and up) Use: 2 S2951 Steel Ball.	1	1	3.35
45	A-686	Gasket—Hand Hole Cover	1/16	1	.05
46	A-685	Cover—Hand Hole Use: 4 S205 Lock Washer, 4 S985 Capscrew.	1/8	1	.25
47	AS-3036	Lever—Gear Shifter (Order A-3036-A)			
	A-3036-A	Lever—Gear Shifter		1	

Prices subject to change without notice

990620 O—52——28

TRANSMISSION (Cont.)

Item No.	Part No.	Description	Wt. Lbs.	Req.	Price
	A-3038-A	Shaft—Gear Shifter Lever..... (Order AS-3038-B)			
	AS-3038-A	Assembly—Shaft—Gear Shifter Lever.. (Order AS-3038-B)			
48	A-3038-B	Shaft—Gear Shifter Lever..... (Order AS-3038-B)			
	AS-3038-B	Assembly—Shaft—Gear Shifter Lever .. Includes: 1 A3038B, 1 A3039 Use: 1 S1456 Cotter Pin, 1 S3003 Woodruff Key.	4	1	4.00
49	A-679	Slotted Nut—1¼"—Transmission Spline Shaft ..... Use: 1 S1403 Cotter Pin.	½	1	.35
50	A-627-A	Poppet—Shifter Rod	⅛	3	.30
51	A-628	Spring—Shifter Rod Poppet.....	1/16	3	.05
52	AS-5003	Bearing—Transmission Spline Shaft—Rear ..... (Gurney No. MRC-407 Ball Bearing)	2¼	1	6.35
	AS-1631	Fork—Rear Shifter ..... (Unit Serial No. 1000-2036)	2	1	3.00
53	A-1631-A	Fork—Rear Shifter ..... (Unit Serial No. 2037 and up) Use: 1S257 Lock Washer, 1 S3075 Capscrew.	1¼	1	3.20
54	A-1023-A	Gear—Transmission Sliding—15 Teeth..	3	1	12.00
55	A-616-B	Shaft—Transmission Spline.....	12	1	9.50
56	A-621-B	Gear—Transmission Sliding—15 and 24 Teeth	7	1	16.75
	AS-1630	Fork—Center Shifter..... Unit Serial No. 1000-2036	1¾	1	3.00
	A-1630-A	Fork—Center Shifter (Order AS-1630-A)			
57		Unit Serial No. 2037-2774			
	AS-1630-A	Fork—Center Shifter ..... Unit Serial No. 2775 and up Use: 1 S257 Lock Washer, 1 S3075 Capscrew.	1	1	4.00
	AS-1629	Fork—Front Shifter..... (Unit Serial No. 1000-2036)	2½	1	3.00
58	A-1629-A	Fork—Front Shifter..... (Unit Serial No. 2037 and up) Use: 1 S257 Lock Washer, 1 S3075 Capscrew.	1¼	1	3.35
	A-1056	Setscrew—Shifter Fork ..... (Unit Serial No. 1000-2036) Use: 1 S138 Nut, 1 S257 Lock Washer.	1/16	3	.20
	B-583	Key—Round (With Forks)..... (Unit Serial No. 2037 and up)	1/16	3	.10
60	A-624-G	Gear—Transmission Sliding—32 and 40 Teeth	19	1	$22.50
61	A-629-A	Support—Shifter Rod..... Use: 3 S203 Lock Washer, 3 S902 Capscrew, 2 S2951 Ball.	9½	1	5.00
62	A-600	Gasket—Transmission Front Plate.....	1/16	1	.15
63	AS-5004-B	Shaft—Front Bevel Pinion and Front Spline Shaft Bearing..... (SKF No. 5409-NR Ball Bearing)	6¾	2	14.25
	A-637-A	Shim—Bevel Pinion Shaft Bearing..... (.0625" Thick)	1/16	2	.05
	A-638-A	Shim—Bevel Pinion Shaft Bearing..... (.0313" Thick)	1/16	2	.05
64	A-639-A	Shim—Bevel Pinion Shaft Bearing..... (.0156" Thick)	1/16	4	.05
	A-640-A	Shim—Bevel Pinion Shaft Bearing..... (.007" Thick)	1/16	6	.05
65	A-605-C	Cover—Bevel Pinion Shaft Bearing..... Use: 5 S205 Lock Washer, 3 S944 Capscrew, 2 S954 Capscrew.	4½	1	2.00

TRANSMISSION (Cont.)

Item No.	Part No.	Description	Wt. Lbs.	Req.	Price
66	A-679-A	Slotted Nut—1½"—Bevel Pinion Shaft.. Use: 1 S1454 Cotter Pin.	½	1	.50
67	A-631-B	Capscrew—Bevel Pinion Bearing Retainer (½"—13 x 1¾" Drilled Head)	¼	4	.15
68	A-603-B	Retainer—Bevel Pinion Shaft Bearing...	2½	1	2.75
69	A-1011-A	Gasket—Bevel Pinion Shaft Bearing Cover	1/16	1	.15
70	A-599-B	Plate—Transmission Front ..... Use: 8 S203 Lock Washer, 8 S902 Capscrew.	27½	1	7.75
71	A-607-H	Gear—Transmission Stationary—34 Teeth	8½	1	16.00
72	A-611-A	Gear—Transmission Stationary—26 Teeth	5¾	1	13.25
73	A-1024-C	Gear—Transmission Stationary—42 Teeth	13¼	1	22.50
74	A-612-A	Gear—Reverse—32 Teeth.....	8¼	1	14.75
75	A-608-A	Gear—Transmission Stationary—51 Teeth	13¼	1	19.50
76	AS-5005	Bearing—Bevel Pinion Shaft—Rear..... (SKF No. NS-60 Cylindrical Roller Bearing)	7¼	1	26.50
77	A-604	Snap Ring—Bevel Pinion Shaft.....	⅛	2	.25
	A-597	Dowel Pin—Transmission Cover..... (Unit Serial No. 1144 & up)	⅛	1	.10
	A-601	Dowel Pin—Transmission Front Plate...	⅛	1	.15
	A-824	Cap—Filler Hole.....	⅛	1	.40
	A-3081	Shim—Transmission Top Cover (.031").. (Unit Serial No. 1144 and up)	1/16	2	.05
	A-3082	Shim—Transmission Top Cover (.015").. (Unit Serial No. 1144 and up)	1/16	2	.05
	A-3083	Shim—Transmission Top Cover (.004").. (Unit Serial No. 1144 and up)	1/16	10	.05
	A-3084	Dowel—Transmission Top Cover Rear.. (Unit Serial No. 1144 and up)	⅛	1	.25
	B-1515	Oil Seal—(Gear Shifter Lever Shaft)...	⅛	1	.05
	B-1516	Retainer—Oil Seal(Gear Shifter Lever Shaft)	1/16	1	.05
		Breather Parts used on Units Serial No. 2727 and up			
	BA-137-A	Support—Breather Pipe..... Use: 1 S2988 ⅜ oz. Sponge	2	1	$1.15
	B-139-A	Gasket—Breather Pipe Support.....	1/16	1	.05
	B-148-B	Pipe—Breather ..... Use: 1 S201 Lock Washer, 1 S1083 Capscrew.	½	1	.30
	BAS-148-B	Assembly—Breather ..... Includes: 1 BA137A, 1 B139A, 1 B148-B. Use: 3 S220 Lock Washer, 1 S979 Capscrew, 2 S3083 Capscrew.	2½	1	1.75
	A-3057	Cover—Breather Hole..... Use: 3 S220 Lock Washer, 3 S1027 Capscrew.		1	.10

For Unit Number see "Serial Number" on front side of Transfer Housing.

HARDWARE PARTS

Part No.	Description	Price
S-116	Nut—¾"—16 Am Std Light Castle.....	$ .08
S-134	Nut—9/16"—18 Am Std Light Castle.....	.04
S-136	Nut—⅝"—18 Am Std Light Castellated.....	.04
S-138	Nut—⅜"—24 Am Std Light S.F. Hex.....	.01
S-169	Nut—⅝"—18 Am Std Light S.F. Hex.....	.04
S-201	Lock Washer—⅝"—SAE Regular.....	.02
S-203	Lock Washer—½"—SAE Regular.....	.01
S-205	Lock Washer—⅜"—SAE Regular.....doz.	.04
S-206	Lock Washer—¾"—SAE Regular.....	.04
S-209	Lock Washer—5/16"—SAE Regular.....doz.	.04
S-220	Lock Washer—¼"—SAE Regular.....doz.	.03

Prices subject to change without notice

For Unit Number see "Serial Number" on front side of Transfer Housing.

HARDWARE PARTS

Part No.	*Description*	*Price*
S-237	Lock Washer—9/16"—SAE Regular	.01
S-257	Lock Washer—3/8" (No. 1120) Shakeproof doz.	.04
S-509	Rivet—1/4" x 3/4" Round Head	.01
S-554	Rivet—1/4" x 1/2" Round Head	.01
S-558	Rivet—1/2" x 4 3/4" Round Head	.07
S-729	Screw—1/4"—20 x 1/2" Am Std Round Head Machine	.01
S-836	Nut—3/8"—16 Am Std Regular S.F. Hex	.03
S-844	Nut—3/4"—10 Am Std Regular S.F. Hex	.15
S-866	Nut, 7/8"—14 Am Std Light Slotted	.15
S-902	Capscrew—1/2"—13 x 1 1/2" Am Std Hex Head	.09
S-903	Capscrew—3/8"—16 x 1" Am Std Hex Head	.04
S-904	Capscrew—3/8"—16 x 2" Am Std Hex Head	.04
S-922	Capscrew—5/8"—11 x 1 1/2" Am Std Hex Head	.11
S-923	Capscrew—3/8"—16 x 1 1/4" Am Std Hex Head	.05
S-944	Capscrew—3/8"—16 x 1 1/2" Am Std Hex Head	.06
S-946	Capscrew—5/16"—18 x 3/4" Am Std Hex Head	.03
S-954	Capscrew—3/8"—16 x 2 1/4" Am Std Hex Head	.06
S-979	Capscrew, 1/4"—20 x 3/4" Am Std Hex Hd	.03
S-985	Capscrew—3/8"—16 x 5/8" Am Std Hex Head	.04
S-987	Capscrew—5/8"—11 x 1 3/4" Am Std Hex Head—Heat Treated	.13
S-992	Capscrew—5/8"—11 x 2" Am Std Hex Head—Heat Treated	.13
S-995	Capscrew—5/8"—18 x 1 1/4" Am Std Hex Head—Heat Treated	.13
S-996	Capscrew—3/4"—10 x 2 1/4" Am Std Hex Head—Heat Treated	.21
S-997	Capscrew—3/4"—10 x 4 1/2" Am Std Hex Head—Heat Treated	.26
S-1027	Capscrew, 1/4"—20 x 5/8" Am Std Hex Hd	.03
S-1083	Capscrew, 1/4"—20 x 1 1/2" Am Std Hex Hd	.05
S-1099	Capscrew—3/4"—10 x 3 1/4" Am Std Hex Head	.20
S-1137	Setscrew—3/8"—16 x 1 1/4" Sq. Head Cup Pointed	.05
S-1171	Setscrew—3/8"—16 x 1" Sq. Head Dog Point	.05
S-1400	Cotter Pin—1/8" x 1 1/4" doz.	.05
S-1401	Cotter Pin—1/8" x 1" doz.	.05
S-1403	Cotter Pin—3/16" x 2" doz.	.07
S-1409	Cotter Pin, 1/8" x 1 1/2" doz.	.07
S-1410	Cotter Pin—3/32" x 3/4" doz.	.04
S-1444	Cotter Pin—5/32" x 1 1/4" doz.	.07
S-1454	Cotter Pin—3/16" x 2 1/4" doz.	.08
S-1456	Cotter Pin—1/4" x 2 1/4"	.01
S-1652	Fitting—1/8" PT Alemite Hydraulic No. 1610 Straight	.06
S-1653	Elbow—1/8" PT x 67 1/2° Alemite No. 1612 Hydraulic	.10
S-1722	Elbow—1" Malleable Street	.30
S-1783	Elbow—1/2" Malleable	.15
S-1785	Nipple—1/2" x 2" Steel Pipe	.30
S-1856	Cap—1" Black	.40
S-1871	Nipple—1/2" x 3 1/2" Steel Pipe	.35
S-1900	Plug—1/2" Standard Pipe	.05
S-1901	Plug—3/4" Standard Pipe	.10
S-1903	Plug—1" Standard Pipe	.10
S-1905	Plug, 3/8" Standard Pipe	.06
S-1912	Plug—1 1/4" Standard Pipe—Countersunk	.21
S-1921	Plug—1/8" Headless Slotted Pipe	.06
S-2681	Nipple—1/2" x 2 1/2" Steel Pipe	.30
S-2931	Plug—7/8" Welch Expansion	.05
S-2938	Key—5/16" x 1 1/4" (No. D) Woodruff	.01
S-2951	Ball—5/8" Diameter Hardened Steel	.08
S-2988	Sponge—3/8 oz. Bronze or Copper	.08
S-3003	Key—1/4" x 7/8" (No. A) Woodruff	.04
S-3022	Plug—1 3/8" Diameter Welch Expansion	.02
S-3043	Key—1/4" x 1 3/8" (No. 127) Woodruff	.10
S-3068	Capscrew—5/8"—11 x 3" Am Std Hex Head	.10
S-3075	Capscrew—3/8"—24 x 1 1/4" Am Std Hex Head—Heat Treated	.05
S-3083	Capscrew, 1/4"—20 x 1 3/4" Am std Hex Hd	.01

Prices subject to change without notice

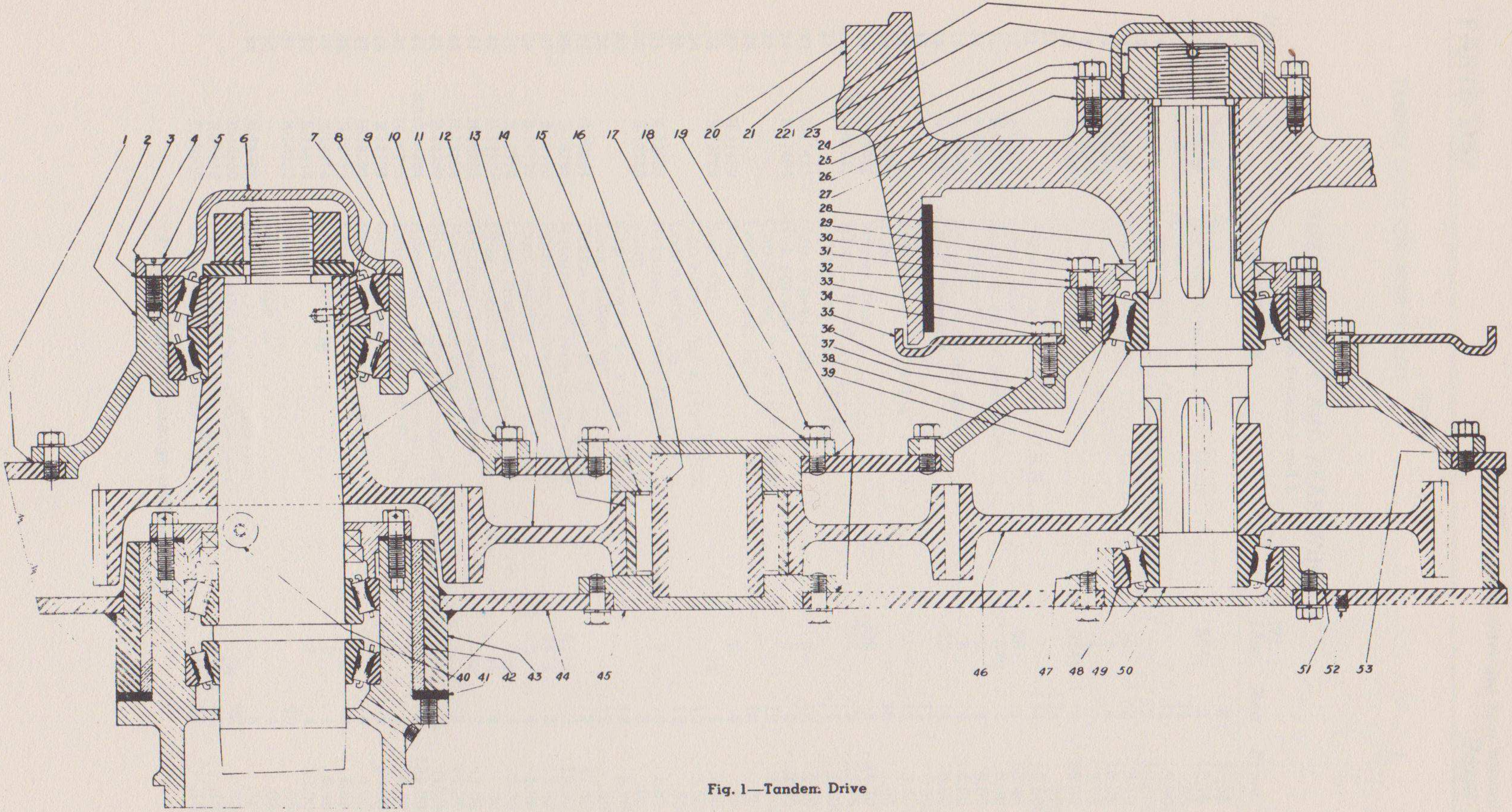

Fig. 1—Tandem Drive

INDEX

TANDEM DRIVE AND REAR WHEELS 1

TANDEM DRIVE AND REAR WHEELS

See Figures 1 and 2

Item No.	Part No.	Description	Wt. Lbs.	Req.	Price
1	R-10758	Shim		6	$ .05
2	B-18298	Bearing Housing Drive Gear	56½	2	13.70
3	H-18285	Shim		24	.05
4		Lockwasher, ½" Cts.		12	3.00C
5		Cap Screw, ½" x 1¼" U.S.S. Cts. Hd.		12	10.50C
6	B-18295	Bearing Retainer Drive Gear	10	2	3.10
7	D-18283	Bearing Cone	5	4	10.85
8	D-18284	Bearing Cup	4	4	7.75
9	B-18290	Gear, Drive	92½	2	56.00
10		Lockwasher, ½"		184	.50C
11		Cap Screw, ½" x 1¼" U.S.S.		184	5.50C
12	B-18291	Gear, Idler	96	4	33.40
13	R-10773	Bearing, roller assembly	5½	4	6.00
14	R-10772	Bearing race	2	4	6.50
15	H-18294	Retainer, bearing shaft	8	4	4.50
16	H-18297	Shaft, bearing	12	4	5.00
17		Lockwasher, ½"		12	.50C
18		Cap Screw, ½" x 1¼" U.S.S.		12	5.50C
19	R-10760	Shim		70	.05
20	SAB-22642	Wheel, rear	300	2	41.70
21	SAB-22641	Wheel, front	218	2	25.75
22		Cotter Key, ¼" x 3" lg.		4	1.10C
23	R-11451	Cap, Wheel Hub	9	4	2.10
24	R-11494	Nut, spindle	5	4	2.50
25		Cap Screw, ½" x 1¼" U.S.S.		12	5.50C
26		Lockwasher, ½"		12	.50C
27	R-11490	Shim	2	4	.10
28	R-10779	Seal, Oil	½	4	2.00
29		Cap Screw, ½" x 1¼" U.S.S.		12	5.50C
30		Lockwasher, ½"		12	.50C
31	R-12353	Retainer, Wheel Bearing	5	4	1.85
32	R-10760	Shim		8	.05
33		Cap Screw, ½" x 1¼" U.S.S.		12	5.50C
34		Lockwasher, ½"		12	.50C
35	G-16681	Brake, wheel R. H. as shown		2	47.50
36	B-18299	Retainer, driven gear—rear	67½	2	19.00
37	B-18300	Retainer, driven gear—front	44½	2	13.45
38	R-10777	Cup, bearing	2	4	5.95
39	R-10776	Cone, bearing	3½	4	9.35
40	D-13774	Plug, breather pipe	⅛	4	.20
41	H-18306	Retainer, housing grease	½	2	2.60
42	H-18296	Bushing, gear case		2	16.50
43	H-18303	Hub, gear case (included with SAG-18304)		2	NSS
44	SAG-18304	Assembly—Gear case and hub		2	125.20
45	H-18293	Retainer, bearing shaft—front	6	4	4.40
46	B-18289	Gear, driven	96	4	34.50
47	H-18292	Retainer, bearing cap	8	4	4.00
48	R-10775	Cup, bearing	1½	4	4.55
49	R-10774	Cone, bearing	3	4	6.45
50	R-12416	Axle	47	4	20.00
51	R-10760	Shim		70	.05
52		Plug, pipe ⅜"		4	.03
53	H-18305	Shim		8	.10
	R-10790	Nut—Tire Lug	⅛	32	.05
	R-10819	Stud—Wheel	⅛	32	.15
	D-18535	Lugs—Low Pressure Tires	⅛	32	.15

Prices subject to change without notice

PARTS LIST

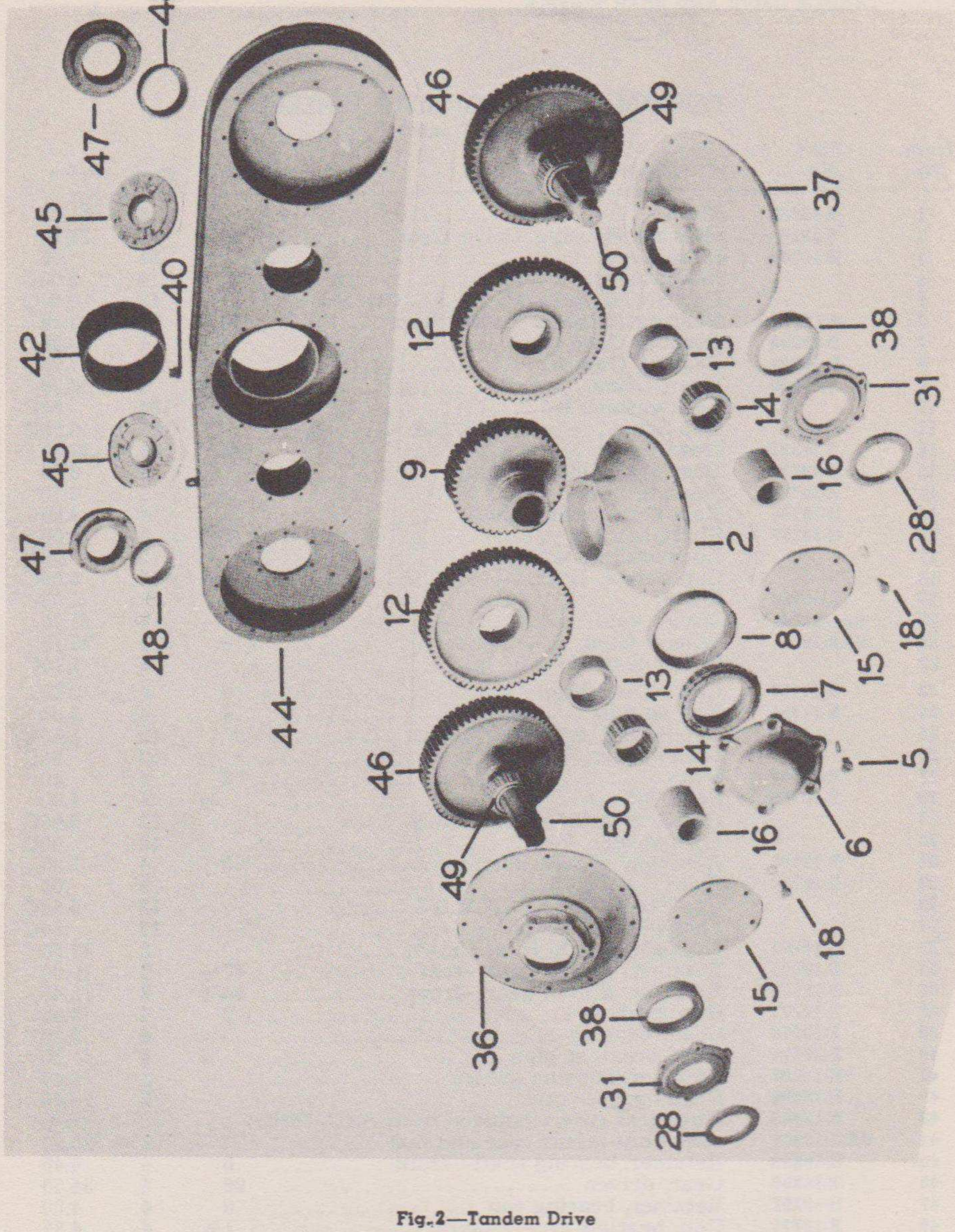

Fig. 2—Tandem Drive

Tires 13:00 x 24—8 Ply lug type
Rims—Tire 13:00 x 24—Size 8:00 T Type S. D. C.
Firestone R. I. T.—Goodyear Type T
Valve—No. TR216. Straight type 2" lg.
Tube—Order for 13:00 x 24 Tire Heavy Duty

INDEX

HYDRAULIC FOOT BRAKE PARTS 1
MASTER CYLINDER PARTS 2
WHEEL BRAKE ASSEMBLY 3
HYDRAULIC WHEEL CYLINDER 2

HYDRAULIC FOOT BRAKE PARTS COMPLETE

Item No.	Part No.	Description	Wt. Lbs.	Req.	Price
	D-552	Spring	½	1	$ .65
	R-10114	Pin—Yoke		2	.10
	SAD-12720	Tube—Brake Drum—Double Drive	1	2	1.50
	RSA-13723	Assembly—Hose—Double Drive	½	2	1.55
	D-16766	Pad—Foot	1½	1	.75
	H-19679	Lever—Master Cylinder	1¼	1	2.40
	H-21416	Pedal—Brake	13½	1	6.15
	SAD-21420	Tube—Brake—8" long—Double Drive	½	1	1.50
	SAD-21421	*Tube—Brake—33" long—Double Drive	¼	1	2.45
		* (Used when machine is not equipped with stop light. Refer to SAD-26999 and SAD-27000.)			
		Coupling—⅛"		1	.15
		Nuts—$\frac{7}{16}$" SAE Jam—Plain		4	1.95C
		Ells—⅛" Str		2	.10
		Cap Screws—½" x 1" U.S.S		16	5.10C
		Lock Washers—½"		16	.50C
		Cap Screws—⅝" x 1¼"—U.S.S		4	9.20C
		Bolts—⅜" x 2¾" Mach		2	4.30C
		Cap Screws—¾" x 2" SAE		8	15.70C
		Nut—⅝" U.S.S. Hex. Jam		1	4.20C
		Washer—1" Flat		4	4.60C
		Washer—⅝" Flat		1	.80C
		Washer—⅝" Lock		1	1.00C
		Set Screws—¼" x ⅜" Allen		8	.05
	SA-21581	Rod—Foot Brake consisting of the following:	4½	1	2.10
	R-10353	Yoke	¾	2	1.00
	H-21576	Rod—Brake	3	1	.75
	SAB-21743	Bracket—Brake Box	7	1	5.00
	D-21860	Collar—Clutch and Brake Pedal Shaft	¼	1	.40
	D-22650	Shaft—Clutch and Brake Pedal	14½	1	2.40
	D-23410	Union—Hose	¼	4	.20
	D-23411	Bracket	⅛	4	.20
	SAD-26999	**Brake Tube, ¼ x 23" lg		1	2.05
	SAD-27000	**Brake Tube, ¼ x 7" lg		1	1.15
		** (Above 2 parts replace SAD-21421 when stop light is used.)			

Prices subject to change without notice

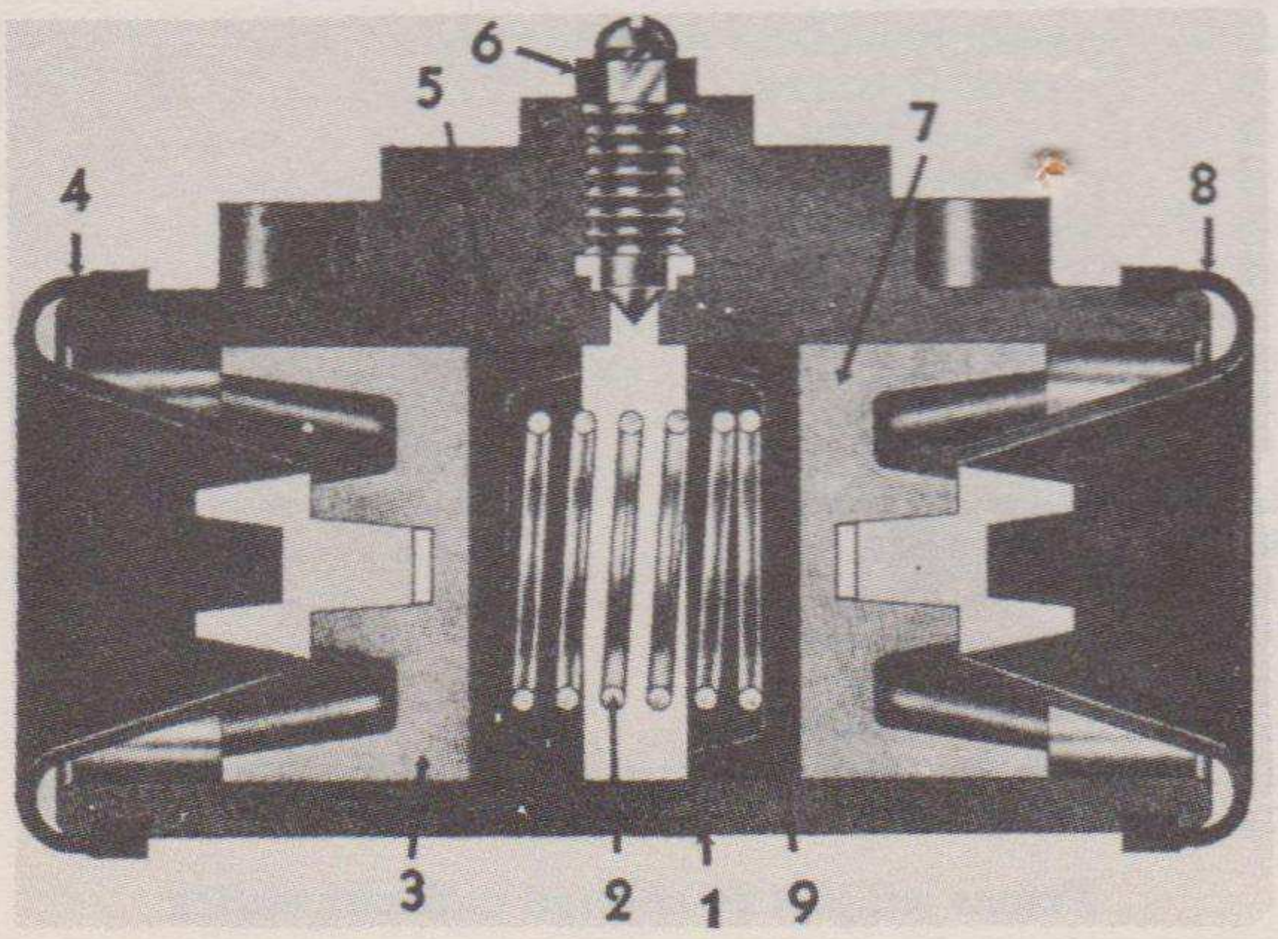

Fig. 1—Wheel Cylinder

HYDRAULIC WHEEL CYLINDER

See Figure 1

Item No.	*Part No.*	*Description*	*Wt. Lbs.*	*Req.*	*Price*
	FC-1012	Assembly—Wheel Cylinder		2	$4.65
1	FD-682	Casting		2	3.25
3 & 7	FC-975	Piston		4	.55
5 & 9	FC-966	Cup		4	.30
2	FC-965	Spring—Return		2	.20
4 & 8	FC-967	Boot		4	.25
6	FC-968	Screw—Bleeder		2	.25
	FC-1035	Fitting—Inlet		2	.70
	FC-602	Gasket—Inlet Fitting		2	.03
	FC-603	Gasket—Inlet Fitting Bolt		2	.03
	FC-1030	Bolt—Inlet Fitting		2	.45

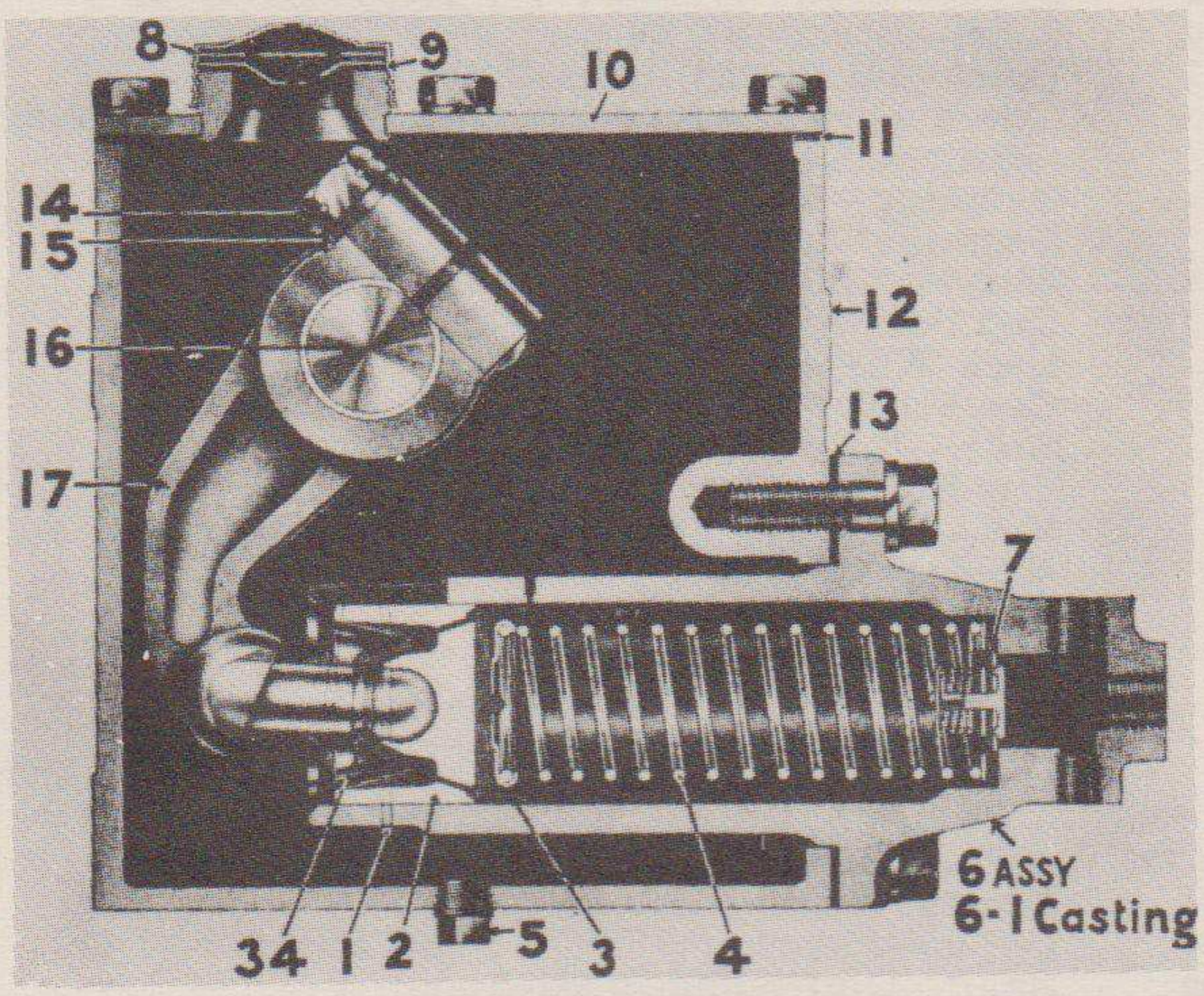

Fig. 2—Master Cylinder

MASTER CYLINDER PARTS

See Figure 2

	H-9943	Assembly—Master Cylinder	13½	1	$21.00
12	FD-2795	Tank—Supply		1	5.25
10	FC-1759	Cover—Supply Tank		1	1.05
11	FD-354	Gasket—Supply Tank Cover		1	.10
6	FC-1764	Assembly—Head and Barrel		1	7.35
6-1	FE-343	Head and Barrel Only		1	5.25
13	FC-607	Gasket—Head		1	.07
2	FC-643	Assembly—Piston		1	.70
3	FD-962	Cup—Piston		1	.30
4	FC-1829	Assembly—Piston Return Spring		1	.25
1	FC-732	Wire—Piston Stop		1	.05
7	FC-1266	Assembly—Valve		1	.65
8	FC-1077	Plug—Filler		1	.30
9	FC-1015	Gasket—Filler Plug		1	.03
16	FD-459	Shaft—Brake		1	2.65
17	FD-1394	Lever—Brake Shaft		1	2.10
14	FC-1918	Bolt—Lever		1	.10
	FD-273	Ring—Oil Seal		1	.20
5	FC-621	Plug—Drain		1	.05
	FC-553	Fitting—Outlet		2	.30
	FC-17	Gasket—Outlet Fitting		3	.03
15	FC-1919	Lockwasher—Lever Bolt		1	.03

Prices subject to change without notice

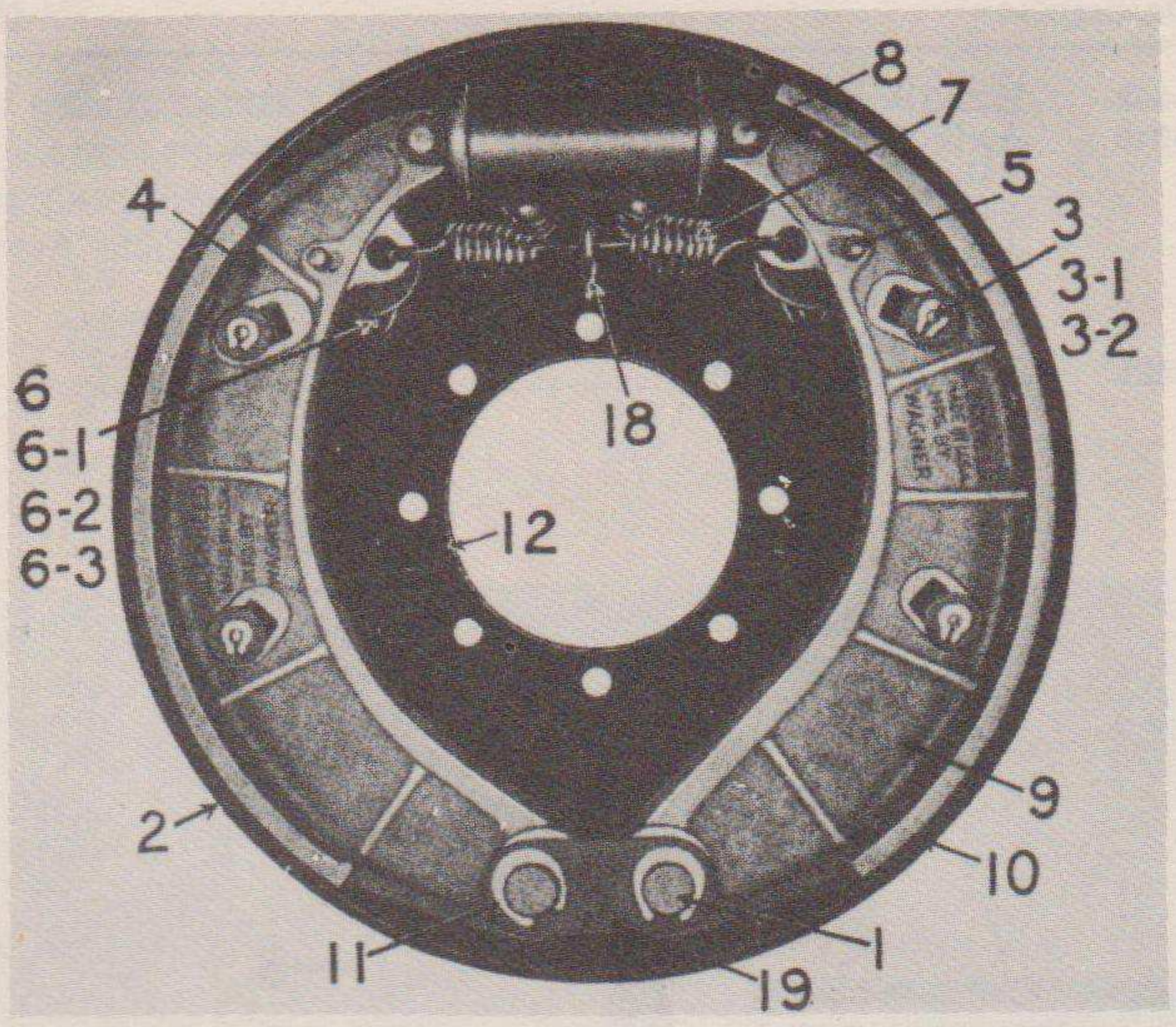

Fig. 3—Wheel Brake

WHEEL BRAKE ASSEMBLY

See Figure 3

Item No.	*Part No.*	*Description*	*Wt. Lbs.*	*Req.*	*Price*
	*G16681-L	Assembly—Brake—Left		1	$47.50
	*G16681-R	Assembly—Brake—Right		1	47.50
12	*FD-1609	Assembly—Dust Shield		2	15.75
9	FD-1122	Assembly—Shoe—Forward		2	16.80
4	FD-1123	Assembly—Shoe—Reverse		2	15.75
10	FD-3680	Lining—Brake—Forward		2	5.25
2	FD-3681	Lining—Brake—Reverse		2	3.75
	FC-1358	Bushing—Brake Shoe		4	.35
1	FC-1402	Pin—Anchor		4	1.35
11	FC-779	Washer—Anchor Pin "C"		4	.05
19	FC-1411	Strap—Anchor Pin		2	.35
6	FC-1408	Cam—Adjusting		4	.25
6 & 1	FC-1404	Spring—Adjusting Cam		4	.20
6 & 2	FC-1406	Assembly—Adjusting Bolt and Washer		4	.55
	FD-1039	Bracket—Adjusting Cam		4	1.60
6 & 3	FD-1141	Assembly—Adjusting Cam and Bracket —Left		2	2.40
6 & 3	FD-1036	Assembly—Adjusting Cam and Bracket —Right		2	2.40
3	FC-1405	Pin—Guide		8	.25
3 & 1	FC-1403	Washer—Guide Pin		16	.03
3 & 2	FC-655	Washer—Guide Pin "C"		8	.03
5	FC-1412	Pin—Shoe Stop		4	.10
8	FC-969	Assembly—Connecting Link		4	.65
7	FC-1178	Spring—Shoe Return		2	.45
	FD-687	Spacer—Wheel Cylinder		2	1.60
	FC-3086	Bolt—Wheel Cylinder Fastening		4	.10

*These parts are special Brake items and should be ordered from Galion.

Prices subject to change without notice

PARTS LIST

TOOLS

Item No.	*Description*		*No. Used*	*Price*
1	C-988	Handle for Axle Nut Wrench	1	$ .15
2	DS-3319	Axle Nut Wrench	1	3.00
3		Allen Set Screw Wrench—¼"	1	.05
4		Allen Set Screw Wrench—⅜"	1	.10
5		Allen Set Screw Wrench—½"	1	.10
6		Allen Set Screw Wrench—¾"	1	.20
7		Allen Set Screw Wrench—⅝"	1	.15
8	R-10821	Rim Wrench—2"	1	.55

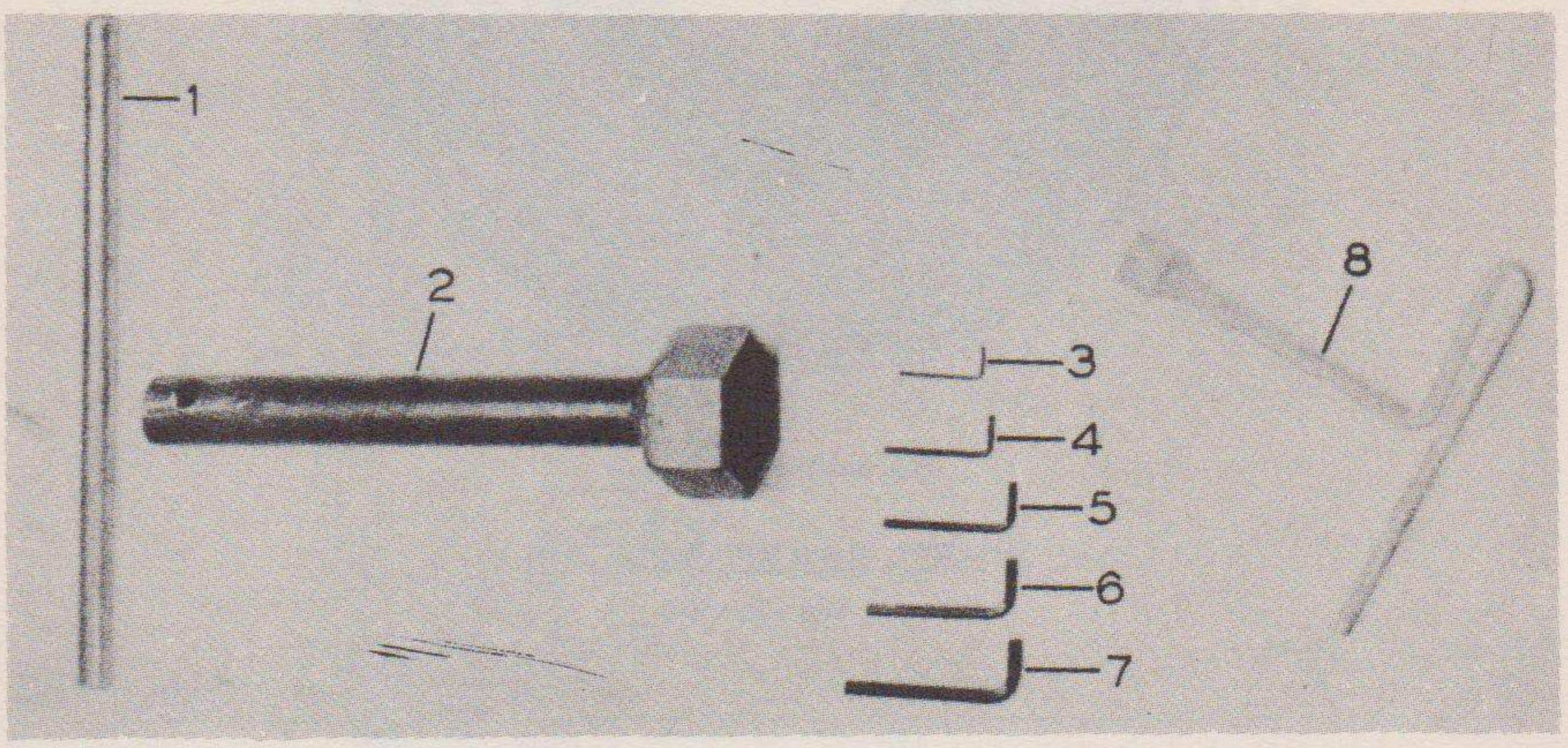

Fig. 1—Tools

PARTS LIST

INDEX

AIR PUMP DRIVE PARTS 4
AIR PUMP 1
CAB 4
FIELD REPLACEMENT SPARE PARTS 6
FUEL TANK AND PARTS 4
MISCELLANEOUS PARTS 6
TOWING HITCH 5

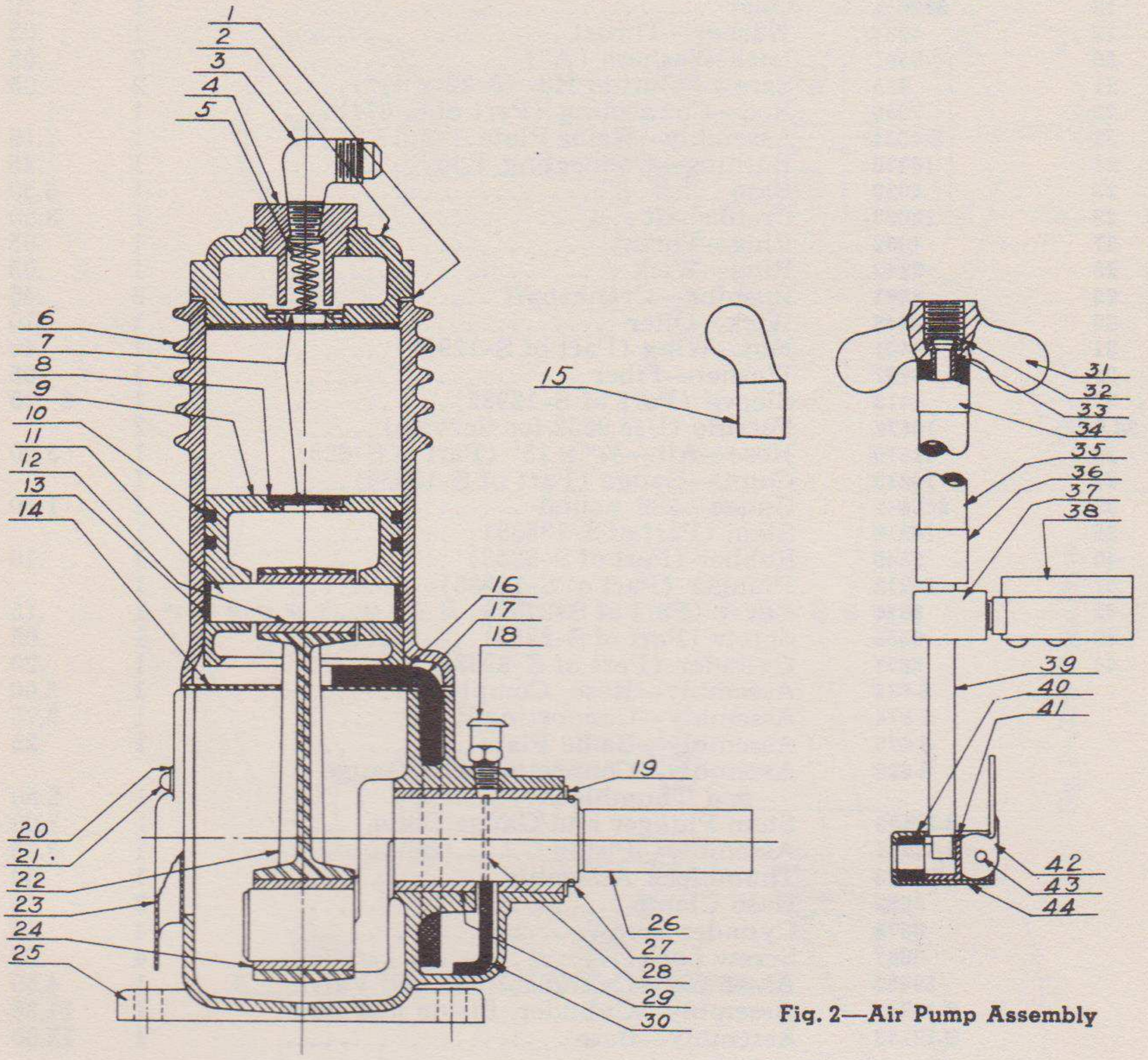

Fig. 2—Air Pump Assembly

AIR PUMP

See Figure 1

Item No.	*Part No.*	*Description*	*Wt. Lbs.*	*Req.*	*Price*
1	4918	Gasket	1		.10
2	4895	Head—Cylinder	1		1.00
3	13240	Elbow—⅜" Tubes to ⅛" Pipe	1		.70
4	8563	Retainer—Valve	1		.75
5	7803	Spring—Valve	1		.15
6	4866	Cylinder	1		2.25
7	4897	Valve	1		.25
8	5354	Retainer—Valve	1		.10
9	5450	Piston—(See also S-13241)	1		2.75
10	6499	Rings—Piston	2		.25

PARTS LIST

Item No.	Part No.	Description	Wt. Lbs.	Req.	Price
11	12992	Pin—Wrist		1	.25
12	10161	Bushing (W. P.)		1	.25
13	7890	Washer		2	.05
14	4027	Plate—Baffle (Part of S-673)		1	.15
15	4412	Cap—Wing		1	.40
16	4029	Pad—Felt (Part of S-673)		1	.05
17	4028	Wick—Oil (Part of S-673)		1	.05
18	9300½	Oiler		1	.30
19	4031	Washer—Thrust		1	.05
20	9521	Lock Washers ($\frac{3}{16}$")		2	.05
21	923	Screw—Button Hd. (8-32 x ½")		2	.05
22	7056	Rod—Connecting (Part of S-674)		1	
23	S-4021	Assembly—Name Plate		1	.15
24	10380	Bushing—Connecting Rod		1	.25
25	4020	Base		1	5.50
26	12093	Crankshaft		1	3.50
27	4032	Ring—Thrust		1	.05
28	3943	Ring—Wick		1	.05
29	4891	Bushing—Crankshaft		2	.45
30	3948	Wick—Oiler		1	.10
31	4401	Nut—Wing (Part of S-12982)		1	.40
32	3297	Washer—Fiber		1	.05
33	4413	Sleeve (Part of S-12982)		1	$ .15
34-36	10672	Ferrule (Use 9552 for Service)		2	
35	11910	Hose—Air—¼" x 15' (Part of S-628)		1	3.00
37	14213	Conn.—Gauge (Part of S-13535)		1	
38	9406½	Gauge—200 pound		1	1.00
39	14218	Stem (Part of S-13535)		1	
40	9640	Rubber (Part of S-8253)		1	.10
41	14212	Plunger (Part of S-13535)		1	
42	9676	Lever (Part of S-8253)		1	.15
43	9555	Screw (Part of S-8253)		1	.05
44	9677	Cylinder (Part of S-8253)		1	.20
	S-628	Assembly—Hose, Complete		1	6.00
	S-674	Assembly—Connecting Rod		1	2.75
	S-673	Assembly—Baffle Plate		1	.25
	S-629	Assembly—Connection with Gauge and Thumblock		1	2.50
	S-13535	Stem Plunger and Gauge Conn.		1	1.00
	S-13241	Assembly—Piston		1	3.75
	S-8523	Thumblock Assembly		1	.50
	9552	Hose Clamp		2	.15
	3078	Cylinder Screws		4	.10
	3097	Screw Lock		4	.05
	58650	Assembly—Cylinder Head and Valve		1	4.50
	S-13242	Assembly—Cylinder, Piston and Rod		1	11.00
	S-13243	Assembly—Base		1	12.00

Prices subject to change without notice

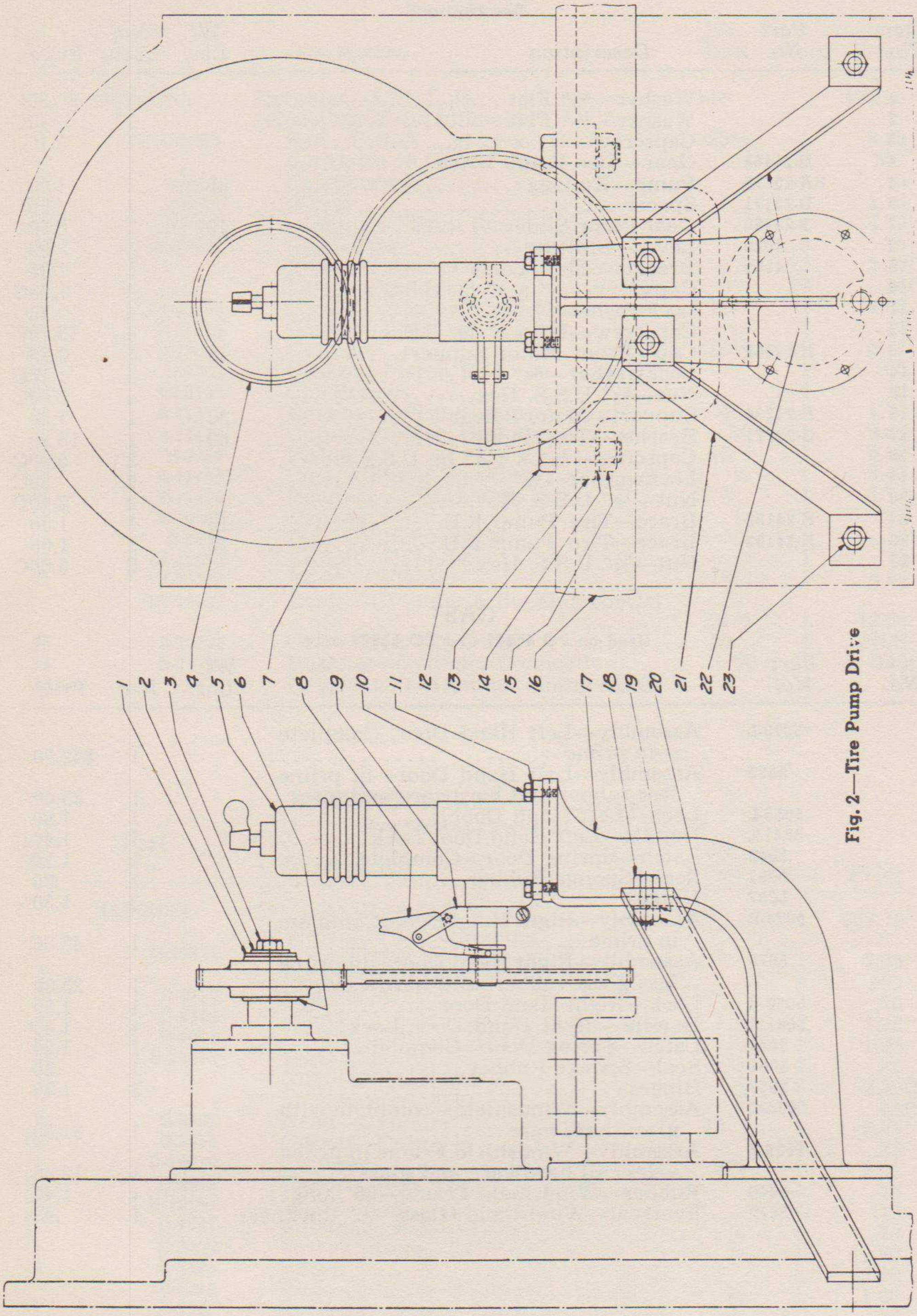

Fig. 2—Tire Pump Drive

Prices subject to change without notice

TIRE PUMP DRIVE

See Figure 2

Item No.	Part No.	Description	Wt. Lbs.	No. Used	Price
1		Washer—5/8" Flat		1	$ .80C
2		Washer—1/2" Flat		1	.40C
3		Capscrew—1/2" x 1" lg.		1	5.10C
4	H-26468	Gear—Tire Pump Drive		1	
5	SA-23775	Pump—Kellogg	35	1	41.00
6	D-23171	Spacer		1	.20
7	B-24180	Gear Pump Slide	10	1	6.50
8	4026	Lever—Shifting		1	.90
9	4185	Bracket—Shift Lever		1	1.85
10		Capscrew—5/16" x 1" lg. U.S.S.		4	1.90C
11		Lockwasher—5/16"		4	.25C
12		Capscrew—3/4" x 2" lg. U.S.S.		4	15.70C
13	H-19668	Cap—Front Motor Support	10	1	3.25
14		Lockwasher—3/4"		4	1.70C
15		Nut—3/4" U.S.S. Hex.		4	5.00C
16	H-21234	Support—Motor—Rear	30	1	7.30
17	G-23771	Bracket—Tire Pump	60	1	15.10
18		Capscrew—1/2" x 1 1/2" lg. U.S.S.		2	5.90C
19		Lockwasher—1/2"		2	.50C
20		Nut—1/2" U.S.S. Hex.		2	2.20C
21	H-24132	Brace—Tire Pump R.H.	15	1	1.00
22	H-24133	Brace—Tire Pump L.H.	15	1	1.00
23		Nut—3/4" U.S.S. Hex.		2	5.00C

CAB

Used on PO 55441 and PO 55897 only

Item No.	Part No.	Description	Wt. Lbs.	Req.	Price
5073-L		Assembly—Left Hand Door, Complete —in prime	1		$42.00
5073		Assembly—Left Hand Door—in prime less rubber and hardware and glass	1		23.00
5055-L		Lock—Left Hand Door	1		1.80
5041-L		Handle—Left Hand Door Lock	1		1.40
5042		Latch—Spring Door—Complete	1		1.20
5051		Seal—Sponge Rubber	1		.30
5057		Hinges	3		1.30
5074-R		Assembly—Right Hand Door, Complete in prime	1		42.00
5074		Assembly—Right Hand Door—in prime less glass rubber, and hardware	1		23.00
5056-R		Lock—Right Hand Door	1		1.80
5041-R		Handle—Right Hand Door Lock	1		1.40
5042		Latch—Spring Door—Complete	1		1.20
5051		Seal—Sponge Rubber	1		.30
5057		Hinges	3		1.30
5034-C		Assembly—Windshield—complete with glass, hardware	1		31.80
5035-F		Assembly—Windshield Frame in prime —less all hardware and glass	1		12.45
5040		Rubber—Windshield Frame—96" long	1		1.40
5072		Everseal—Windshield Glass—1/16" thickness	1		.40

Prices subject to change without notice

Item No.	Part No.	Description	Wt. Lbs.	Req.	Price
	5045	Handle—Windshield Pull		1	.40
	5068	Arm—Windshield Throwout		2	.70
	5044	Windshield Throwout Arm to Post Bracket		2	.25
	5046	Screw—Wing		2	.60
	5047	Washer—Wing Screw Fibre		2	.04
	5048	Retainer—Wing Screw Fibre Washer		2	.08
	5049	Screw—Throwout Arm to Bracket		2	.04
	5043	Windshield Throwout Arm to Frame Bracket		2	.35
	5010	Cab—Rear Glass, safety sheet 24 x 32		1	10.60
	5032	Cab—Rear Glass Rubber (H) Section 118" long		1	1.90
	5009	Cab—Rear Quarter Glass Safety Sheet 10 x 24		2	3.20
	5033	Cab—Rear Quarter Glass Rubber (H) Section 74" lg		2	1.30
	5006	Cab—Windshield Glass, Safety Sheet 24 x 40		1	13.20
	5007	Cab—Door Glass Upper, Safety Sheet 16 x 24		2	5.20
	5038	Cab—Door Glass Upper Rubber (lip type) 82" lg		2	1.40
	5008	Cab—Door Glass Lower Safety Sheet 16 x 22		2	4.80
	5039	Cab—Door Glass Lower Rubber (lip type) 78" lg		2	1.30
	5011	Cab—Front Bottom Glass—11 x 18"		2	2.75
	5070-A	Hold Back Catch—Door		2	1.50
	SA-20710	Assembly—Cab Bottom		1	42.00
	SA-24027	Assembly—Enclosed Cab		1	220.00

FUEL TANK AND PARTS

Item No.	Part No.	Description	Wt. Lbs.	No. Used	Price
	D-6790	Cap		1	$ .80
	SAH-22863	Band—Fuel Tank	3	2	1.50
	SAH-22864	Support—Fuel Tank—R.H.	25	1	4.50
	SAH-22865	Support—Fuel Tank—L.H.	25	1	4.50
	SAB-23494	Tank—Fuel	84	1	33.25
	D-22875	Pad—Fuel Tank Strap	2	2	.30
	D-22876	Pad—Fuel Tank	2	2	.50
	SAH-21445	Fuel Strainer	10	1	7.75
	H-16091	Strainer Top	3	1	2.80
	28294-DB	Flexible Fuel Tube		1	2.25
	28900-D	Fuel Tank Needle Valve		1	2.20
	24853-D	Half Union—Hose Conn.—in Flange		1	.25
	37323-DX	Fuel Tube Elbow in Coupling Flange		1	
	22510-D	Water Trap Inlet Elbow in Coupling Flange		1	
	63280-D	Fuel Tube Clamp—Lower		1	
	63281-D	Fuel Tube Clamp—Upper		1	
	48232-D	Elbow—Return Tube Elbow in Tank		1	
	D-16235	Gasket—Fuel Strainer		2	.10

Prices subject to change without notice

990620 O—52——29

PARTS LIST

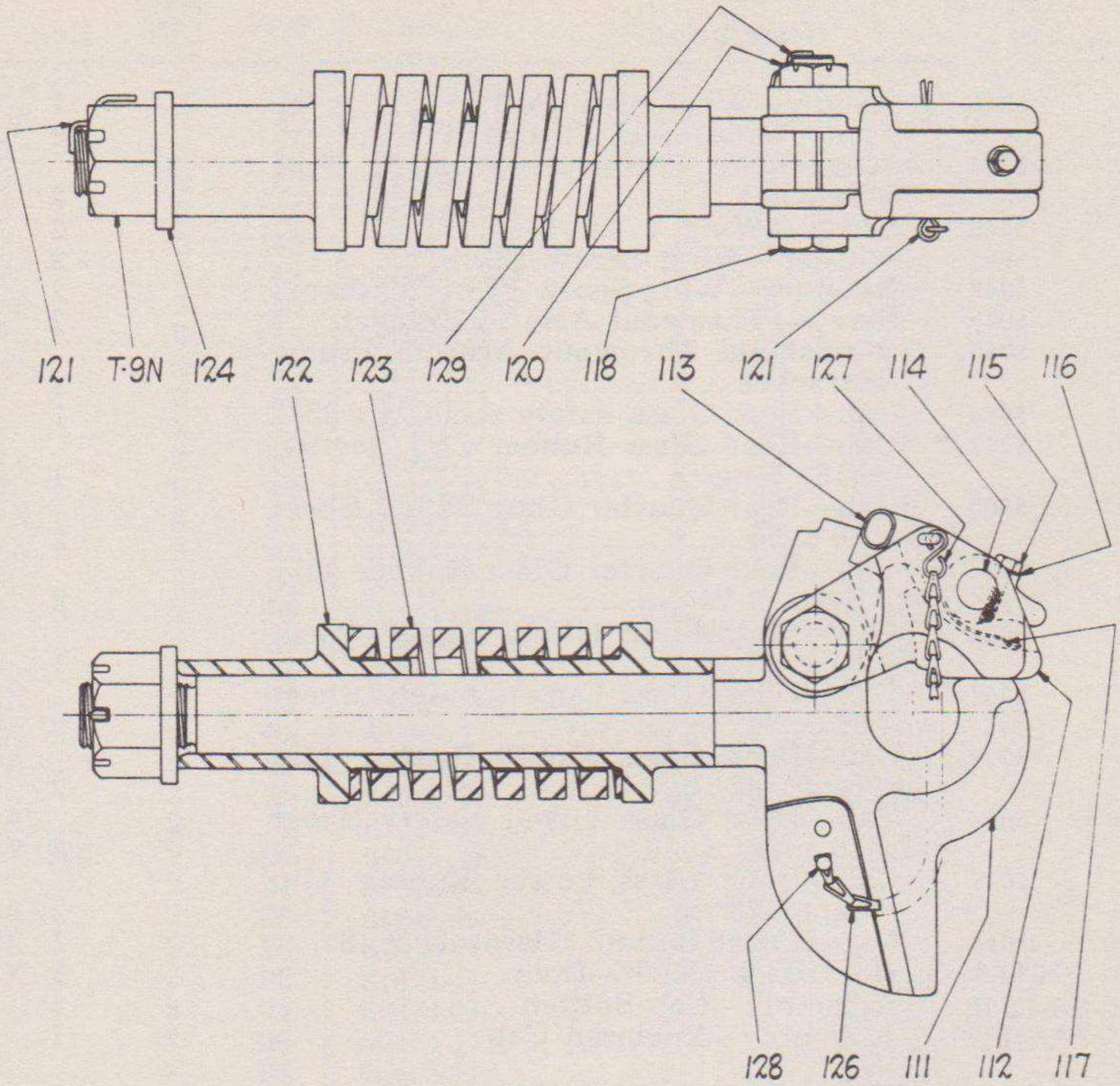

TOWING HITCH

Holland Hitch Company
Holland, Mich.

As used on Purchase Order PI-2364, PI-2967 and PI-3193

Part No.	*Description*	*No. Used*	*Wt. Lbs.*	*Price Each*
110	Assembly—hitch	1		$32.00
111	Pintle Hook	1	21.84	13.25
112	Pintle lock	1	5.06	3.90
113	Pintle latch (dog)	1	1.67	1.55
114	Pintle latch pin, 7/8" x 2½" lg.	1	.41	.30
115	Pintle latch cap screw, 5/16" SAE x 1¼" lg.	1	.038	.10
116	Pintle latch lock washer, 5/16"	1	.003	.05
117	Pintle latch spring	1	.028	.40
118	Pintle lock bolt, 1" SAE x 3⅞"	1	1.00	1.60
120	Pintle lock bolt jam nut, 1" SAE	1	.17	.20
121	Cotter pin, ¼" x 3" lg.	2	.034	.10
122	Pintle sleeve	2	4.00	3.85
123	Pintle spring	1	7.25	2.25
124	Pintle washer	1	.53	.24
126	Chain	1	.035	.10
127	"S" Link	1	.01	.01
128	Drive screw Type "U" No. 10 x ½"	1	.005	.01
129	Pintle lock bolt cotter, ⅛" x 1½"	1	.013	.05
T-9N	Pintle nut	1	1.25	.70
	Capscrew, 5/8 x 2" U.S.S.—Hitch to Frame		4	
	Nut, 5/8" Hex U.S.S.—Hitch to Frame		4	
	Lockwasher, 5/8"—Hitch to Frame		4	

Prices subject to change without notice

MISCELLANEOUS PARTS

Item No.	Part No.	Description	Wt. Lbs.	No. Used	Price
	SA-22731	Clamp—Rear Frame R.H.	30½	1	$47.60
	SA-22732	Clamp—Rear Frame L.H.	30½	1	47.60
	H-19668	Cap—Front Motor Support	12¾	1	3.25
	D-21134	Shim—Rear Frame Clamp		16	.10
	H-21227	Cushion—Seat	7	3	5.70
	H-21228	Cushion—Back Rest	12	1	4.10
	SA-21321	Clamp—Rear Frame	27	2	17.75
	SA-21482	Platform—Operators	85	1	11.75
	SAH-21577	Steps—Cab	14½	2	2.75
	SA-21774	Tube—Rear Frame Torque (replaced by SAB-26930)		1	30.00
	G-22597	Block—Head	240	1	106.75
	SA-24487	Cover and Lid—Rear Frame		1	5.50
	D-25056	Brace—Step	½	2	.25
	G-23482	Front Motor Support		1	27.50
	B-23483	Lower Fan Pulley		1	12.25
	H-23487	Clamp—Front Motor Support		1	4.50
	H-23499	Cover—Clutch		1	1.00
	SAB-23485	Support—Rear Motor—Crank End		1	23.75
	SA-23777	Front Motor Support and Cap		1	21.75
	SAH-26483	Curtain—Radiator		1	5.25
	SA-23263	Line—Oil Gauge		1	3.75
	D-23488	Shim—Motor Support		Var.	.10
	A-1453A	Adapter—Engine to Overdrive	165	1	55.25
	xSAH-26931	Crank Extension used on PO-		1	1.55
	xSAB-26930	Pintle Carriage or Rear Torque Tube (replaces SA-21774)		1	30.00
x	SAB-26922	L.H. Bracket for tool box		1	4.40
x	SAB-26923	R.H. bracket for tool box		1	4.40
x	SAB-26924	Tool box assembly		1	31.25
x		10 ton hydraulic jack		1	27.50
x		Pad lock with three keys		2	
	x	Capscrew, ½x1½" U.S.S. tool box attaching		4	
	x	Nut, ½" U.S.S. tool box attaching		4	
	x	Lockwasher, ½" U.S.S. tool box attaching		4	
	xSAH-26483	Radiator Curtain		1	4.00
	xD-26936	Special Towing Eye		1	.50
	xD-26485	Curtain Support		1	.15

xSpecial parts used only on PO PI-2364. PI-2967 and PI-3193.

FIELD REPLACEMENT SPARES
101 DIESEL GRADER

Item No.	Part No.	Description	No. Used	Price
	D-22922	Spring—Valve	2	$ .10
	D-23474	Belt	1	2.50
	H-23838	Hose	1	9.00
	R-11467	Seal—Oil	2	.50
	D-22783	Spring	2	.35
	54875-D	Belt—Generator Drive	1	.95
	30982-D	Belt—Fan	1	2.30
	51344-V	Sediment Bulb	1	.10
	D-21965	Hose—Fuel	1	2.80
		Blade—12' x 6" x ½" (2 pc.)	1	8.16
	H-20111	End Bit—R.H.	1	4.25
	H-20112	End Bit—L.H.	1	4.25

Prices subject to change without notice

NUMERICAL INDEX

GRADER UNIT PARTS LIST

GALION 101 DIESEL MOTOR GRADER

Part No.	Sec.	Page
3	6	11
G- 8	3	4
T- 9-N	12	6
CA- 10	3	5
13-A	3	3
FC- 17	10	2
21	3	3
110	12	6
111	12	6
112	12	6
113	12	6
114	12	6
115	12	6
116	12	6
S-116	8	14
117	12	6
118	12	6
120	12	6
121	12	6
122	12	6
123	12	6
124	12	6
126	12	6
127	12	6
128	12	6
129	12	6
S-134	8	14
S-136	8	14
BA-137-A	8	14
S-138	8	14
B-139-A	8	14
B-148-B	8	14
BAS-148-B	8	14
P-159	3	4
C-169	8	5
S-169	8	14
X-201	8	14
S-203	8	14
S-205	8	14
S-206	8	14
S-209	8	14
S-220	8	14
S-237	8	15
21-254	1	2
21-255	1	2
21-256	1	2
S-257	8	15
21-259	1	2
FD-273	10	2
318-C	3	4
A-333	6	11
FE-343	10	2
FD-354	10	2
A-398	8	5
D-432-S	5	1
D-432-S	6	1
D-432-S	6	5
XA-456	1	7
FD-459	10	2
486	3	6
S-509	8	15
D-552	1	2
D-552	10	1
FC-553	10	2
D-554	8	14
D-558	8	14
B-583	8	13
A-596-A	8	9
A-597	8	5
A-597-B	8	5
A-597	8	14
A-598-A	8	12
A-599-B	8	14
A-600	8	13
A-601-A	8	5
A-601	8	14
A-602-E	8	9
FC-602	10	2
A-603-B	8	13
FC-603	10	2
A-604	8	14
A-605-C	8	13
A-607-H	8	14
FC-607	10	2
A-608-A	8	14
A-611-A	8	14
A-612-A	8	14
A-614	8	9
A-615	8	9
A-616-B	8	13
A-617	8	5
A-618-A	8	4
A-620-A	8	4
A-621-B	8	13
FC-621	10	2
A-624-G	8	13
A-627	8	4
A-627-A	8	13
A-628-A	8	4
A-628	8	13
S-628	12	2
A-629-A	8	13
S-629	12	2
A-631-B	8	13
A-632	8	9
A-636	8	9
A-637-A	8	13
A-638-A	8	13
A-639-A	8	13
A-640-A	8	13
AR-643-C	8	8
AS-643-G	8	8
FC-643	10	2
A-644-E	8	9
A-645-D	8	9
A-645	8	9
AS-645	8	9
A-647	8	8
A-648	8	8
A-648-C	8	8
A-649-A	8	9
A-650-A	8	9
A-651-A	8	9
A-652-A	8	9
FC-655	10	3
A-657	8	9
AS-657-B	8	9
AS-657-C	8	9
A-658-B	8	9
A-658-C	8	9
A-659-B	8	5
A-659-C	8	5
A-659-D	8	5
A-660	8	12
A-660-A	8	12
S-673	12	2
S-674	12	2
A-679	8	4
A-679	8	13
A-679-A	8	13
FD-682	10	2
A-685	8	12
A-686	8	12
FD-687	10	3
A-692-A	8	4
693-A	1	7
A-699-E	8	6
A-700-E	8	8
A-700-H	8	8
A-701-C	8	7
AS-701-C	8	7
A-703-C	8	7
A-706-E	8	7
A-707-A	8	6
A-708-A	8	6
A-709-A	8	6
A-710-A	8	6
D-711-A	8	7
S-729	8	15
FC-732	10	2
C-771-A	8	12
A-773-A	8	8
A-774-A	8	9
AS-774-A	8	9
A-775-A	8	9
A-776-A	8	9
A-779	8	9
FC-779	10	3
A-781-A	8	9
A-824	8	14
S-836	8	15
S-844	8	15
S-866	8	15
867-ORD	3	5
S-902	8	15
S-903	8	15
S-904	8	15
S-922	8	15
S-923	8	15
923	12	2
A-928	8	12
S-944	8	15
S-946	8	15
950-1	3	6
951-1	3	6
S-954	8	15
FD-962	10	2
FC-965	10	2
FC-966	10	2
FC-967	10	2
FC-968	10	2
FC-969	10	3
FC-975	10	2
S-979	8	15
S-985	8	15

NUMERICAL INDEX

GRADER UNIT PARTS LIST

GALION 101 DIESEL MOTOR GRADER

Part No.	Sec.	Page
S-987	8	15
S-992	8	15
S-995	8	15
S-996	8	15
S-997	8	15
C-998	11	1
A-1011-A	8	14
FC-1012	10	2
FC-1015	10	2
A-1021	8	9
AS-1021	8	9
A-1023-A	8	12
A-1024-C	8	14
S-1027	8	15
A-1028	8	9
FC-1030	10	2
FC-1035	10	2
FD-1036	10	3
FD-1039	10	3
A-1056	8	13
1072	7	7
1073	7	7
FC-1077	10	2
B-1080	8	4
S-1083	8	15
S-1099	8	15
G-1107	3	3
FD-1122	10	3
FD-1123	10	3
1124	3	7
S-1137	8	15
A-1140	8	9
FD-1141	10	3
1143	3	8
S-1171	8	15
FC-1178	10	3
G-1204	3	3
G-1228	3	3
1247	3	7
FC-1266	10	2
G-1273	3	3
AS-1295-A	8	5
A-1297-A	8	6
DS-1319	8	5
D-1321	8	5
FC-1358	10	3
FD-1394	10	2
S-1400	8	15
S-1401	8	15
FC-1402	10	3
S-1403	8	15
FC-1403	10	3
FC-1404	10	3
FC-1405	10	3
FC-1406	10	3
FC-1408	10	3
S-1409	8	15
S-1410	8	15
FC-1411	10	3
FC-1412	10	3
1422	3	2
A-1443-B	8	7
S-1444	8	15
A-1449	8	7
AS-1451	8	7
A-1453-A	12	7
S-1454	8	15
S-1456	8	15
B-1515	8	14
B-1516	8	14
1591	7	7
FD-1609	10	3
1612	7	5
AS-1622-A	8	12
AS-1622-B	8	12
AS-1624-A	8	12
AS-1624-B	8	12
AS-1627-A	8	12
AS-1627-B	8	12
AS-1629	8	13
A-1629-A	8	13
AS-1630	8	13
A-1630-A	8	13
AS-1631	8	13
A-1631-A	8	13
S-1652	8	15
S-1653	8	15
1700	7	5
1704	7	5
S-1722	8	15
FC-1759	10	2
FC-1764	10	2
S-1783	8	15
S-1785	8	15
FC-1829	10	2
S-1856	8	15
S-1871	8	15
S-1900	8	15
S-1901	8	15
S-1903	8	15
S-1905	8	15
S-1912	8	15
FC-1918	10	2
FC-1919	10	2
S-1921	8	15
1967	3	7
2004	7	5
2007	7	5
2008	3	7
2009	7	5
2014	7	5
2015	7	5
2016	7	5
2017	7	5
2019	7	5
2020	7	5
2021	7	5
2025	7	5
2126	3	7
2126-7186	3	7
2126-7193	3	7
2321	3	5
2378	3	8
2460	3	7
2461	3	7
S-2681	8	15
2724	7	7
FD-2795	10	2
2822	3	8
2858	3	7
2897	3	7
2902	1	7
S-2931	8	15
S-2938	8	15
S-2951	8	15
D-2983	4	8
S-2988	8	15
A-3000-D	8	4
A-3000-C	8	4
A-3003-A	8	4
S-3003	8	15
A-3005-A	8	5
A-3006	8	4
A-3007	8	4
A-3008	8	4
A-3009-A	8	4
A-3010-A	8	4
A-3011-B	8	5
A-3011-A	8	5
A-3013-A	8	4
A-3013-B	8	4
A-3014-D	8	4
A-3016-F	8	5
A-3018-A	8	4
A-3019-A	8	5
A-3021-A	8	5
A-3022-A	8	4
S-3022	8	15
A-3023	8	5
A-3024	8	4
A-3025	8	4
A-3026	8	4
A-3027	8	4
A-3028-A	8	5
A-3030	8	5
A-3031	8	4
A-3032	8	4
A-3033	8	4
AS-3034	8	4
A-3035	8	4
A-3036-A	8	12
AS-3036	8	12
A-3038-A	8	13
A-3038-B	8	13
AS-3038-A	8	13
A-3039	8	12
S-3043	8	15
A-3048	8	5
A-3049	8	5
A-3050-A	8	12
A-3050-B	8	12
A-3050-C	8	12
A-3050-D	8	12
ASR-3050-D	8	12
A-3053-A	8	5
A-3054	8	5
A-3055	8	5
A-3056	8	4
A-3057	8	14
D-3057-A	8	12
A-3059	8	4
S-3068	8	15
A-3075	8	12
S-3075	8	15
3078	12	2

NUMERICAL INDEX

GRADER UNIT PARTS LIST

GALION 101 DIESEL MOTOR GRADER

Part No.	Sec.	Page
A-3081	8	14
A-3082	8	14
A-3083	8	14
S-3083	8	15
A-3084	8	14
FC-3086	10	3
3097	12	2
D-3167	6	9
D-3295	5	1
3297	12	2
DS-3319	11	1
3401	3	8
H-3449	6	8
3458	3	7
3459	3	7
H-3589	6	9
D-3591	6	9
FD-3680	10	3
FD-3681	10	3
H-3833-A	6	8
D-3838	6	9
SA-3939	6	11
4007	3	2
4020	12	2
S-4021	12	2
4026	12	4
4027	12	2
4028	12	2
4029	12	2
4031	12	2
4032	12	2
D-4035	5	1
D-4056	6	13
4185	12	4
4242	3	8
D-4357	4	2
D-4380	6	8
D-4386	6	3
D-4386	6	5
4401	12	2
4412	12	2
4413	12	2
4472	3	8
4527-S	3	4
4785	3	6
4786	3	6
4866	12	1
4891	12	2
4895	12	1
4897	12	1
4918	12	1
4943	12	2
4948	12	2
AS-5003	8	13
AS-5004-B	8	13
AS-5005	8	14
5006	12	5
5007	12	5
5008	12	5
5009	12	5
5010	12	5
AS-5011	8	8
AS-5011-B	8	8
5011	12	5
AS-5012-A	8	6
DS-5014	8	4
AS-5015-A	8	6
AS-5028	8	5
AS-5029	8	4
AS-5030	8	5
5032	12	5
5033	12	5
5034-B	12	4
5035-F	12	4
5038	12	5
5039	12	5
5040	12	4
5041-R	12	4
5041-L	12	4
5042	12	4
5043	12	5
5044	12	5
5045	12	5
5046	12	5
5047	12	5
5048	12	5
5049	12	5
5051	12	4
5055-L	12	4
5056-R	12	4
5057	12	4
5068	12	5
5070-A	12	5
5072	12	4
5073-L	12	4
5073	12	4
5074	12	4
5074-R	12	4
D-5301	7	16
D-5301	7	19
D-5302	7	16
D-5302	7	19
H-5305	7	16
H-5305	7	19
B-5307	7	16
B-5307	7	19
B-5308	7	19
5309	3	8
5332	3	8
5354	12	1
5450	12	1
D-5579	4	2
D-5579	4	8
D-5582	7	16
D-5582	7	19
D-5583	7	16
D-5583	7	19
D-5584	7	16
D-5584	7	19
D-5837	6	9
D-5838	6	9
D-5845	6	9
005884	3	2
5934	3	6
5970	1	7
5975	1	7
D-6065	7	16
D-6065	7	19
D-6066	7	16
D-6066	7	19
B-6144	7	16
6153	3	8
6205	3	7
D-6223	4	1
6282	1	7
6423	3	8
6499	12	1
6544	3	8
6549	3	8
6560	3	8
6580	3	8
6586	3	8
6639	3	8
6675	3	8
6726	3	8
6755	3	8
D-6790	12	5
6797	3	7
6798	3	7
6810	3	8
6822	3	8
6879	3	8
D-6899	1	3
D-6899	1	5
D-6899	7	10
D-6900	7	10
7012	3	8
7056	12	2
7119	3	8
7155	3	8
7186	3	8
2126-7186	3	7
2126-7193	3	7
FC-7715	3	6
D-7220	5	1
D-7220	6	5
D-7220	6	9
D-7220	7	2
D-7220	7	3
D-7259	5	1
H-7267	7	13
H-7267	7	16
D-7268	7	13
D-7268	7	16
D-7278	5	1
D-7278	6	13
D-7307	7	13
D-7307	7	16
D-7308	7	13
D-7308	7	16
D-7340	6	5
D-7520	6	3
D-7520	6	5
D-7520	6	9
H-7521	6	3
H-7521	6	5
H-7521	6	9
SA-7786	4	8
SA-7786	7	2
SA-7786	7	3
SA-7788	6	9
SA-7788	7	2
SA-7788	7	3
7803	12	1
7890	12	2

NUMERICAL INDEX

GRADER UNIT PARTS LIST

GALION 101 DIESEL MOTOR GRADER

Part No.	Sec.	Page
8021	3	8
8039	3	7
8040	3	7
8041	3	7
8042	3	7
8045	3	7
8050	3	8
8051	3	8
8066	3	7
8081-D	3	15
8189-F	1	7
25-8267	1	5
25-8294	3	3
25-8294	7	3
D-8506	7	13
D-8506	7	16
S-8523	12	2
29-8536	6	3
8542	7	7
8563	12	1
8640	1	7
D-8710	7	13
D-8710	7	16
D-8710	7	19
D-9105	4	2
D-9105	4	5
9166	3	8
D-9234	4	5
D-9235	4	5
D-9236	4	5
D-9237	4	5
D-9238	4	5
D-9239	4	5
D-9240	4	5
D-9241	4	5
D-9295	4	1
D-9295	4	2
D-9296	4	2
D-9296	4	5
9300½	12	2
28-9304	1	2
9321	3	8
D-9395	4	2
D-9395	4	5
9406½	12	2
9521	12	2
9552	12	2
9555	12	2
9640	12	2
9676	12	2
9677	12	2
H-9943	1	5
H-9943	10	2
R-10107	7	13
R-10107	7	16
R-10107	7	19
R-10114	1	2
R-10114	1	5
R-10114	10	1
10161	12	2
R-10353	1	2
R-10353	1	5
R-10353	10	1
10380	12	2
10672	12	2
R-10758	9	1
R-10760	9	1
R-10772	9	1
R-10773	9	1
R-10774	9	1
R-10775	9	1
R-10776	9	1
R-10777	9	1
R-10779	9	1
R-10783	4	5
R-10785	4	5
R-10788	4	5
R-10789	4	5
R-10790	4	5
R-10790	9	1
R-10791	4	5
R-10792	4	5
R-10819	9	1
R-10821	11	1
R-11289	7	1
R-11305	7	1
R-11414	7	10
R-11451	9	1
R-11467	7	10
R-11467	12	6
R-11469	7	13
R-11469	7	16
R-11470	7	13
R-11470	7	16
R-11475	7	13
R-11475	7	16
R-11490	9	1
R-11494	9	1
R-11590	6	5
R-11700	5	1
RSA-11720	3	2
R-11721	3	2
R-11723	3	3
R-11760	3	3
11910	12	2
R-12057	4	5
R-12058	4	5
R-12093	4	8
12093	12	2
IX-12100	7	7
R-12353	9	1
R-12416	9	1
B-12692	7	19
B-12695	7	19
H-12696	7	19
D-12697	7	19
D-12699	5	1
D-12699	6	1
D-12699	6	5
D-12699	6	13
SAD-12720	10	1
D-12747	7	19
D-12748	7	19
D-12749	7	19
D-12750	7	19
D-12751	7	19
D-12752	7	19
D-12830	5	1
H-12831	5	1
H-12848	5	1
12992	12	2
D-13022	5	1
13240	12	1
S-13241	12	2
S-13242	12	2
S-13243	12	2
D-13356	5	1
SA-13375	5	1
S-13535	12	2
RSA-13723	10	1
R-13724	1	5
D-13774	9	1
R-14050	6	9
14212	12	2
14213	12	2
14218	12	2
IX-15014	7	7
R-15051	7	2
P-15375	3	4
P-15418	3	4
P-15473	3	4
P-15487	3	4
P-15488	3	4
P-15489	3	4
P-15490	3	4
P-15497	3	4
15568	3	4
R-15840	7	2
H-16091	12	5
D-16235	12	5
D-16287	5	1
D-16438	1	7
G-16681	9	1
G-16681-L	10	3
G-16681-R	10	3
D-16756	5	1
D-16766	1	2
D-16766	1	5
D-16766	10	1
D-17044	6	11
D-17046	6	11
D-17048	6	9
D-17049	6	9
D-17050	6	9
D-17051	6	9
D-17052	6	11
D-17069	7	3
17077	7	5
H-17252	1	2
17465	7	7
D-18283	9	1
D-18284	9	1
H-18285	9	1
B-18289	9	1
B-18290	9	1
B-18291	9	1
H-18292	9	1
H-18293	9	1
H-18294	9	1
D-18295	9	1
H-18296	9	1
H-18297	9	1
B-18298	9	1
B-18299	9	1

GALION 101 DIESEL MOTOR GRADER

Part No.	Sec.	Page
B-18300	9	1
H-18303	9	1
SAG-18304	9	1
H-18305	9	1
H-18306	9	1
D-18535	9	1
B-19185	4	8
R-19399	3	3
R-19400	3	3
H-19664	1	3
H-19665	1	3
H-19668	12	4
H-19668	12	7
H-19679	1	5
H-19679	10	1
19715	7	7
SA-19798	7	6
SA-19798	7	3
SA-19807	1	3
D-20077	6	3
D-20082	6	3
D-20103	6	13
D-20104	6	13
SAH-20109	6	11
SAH-20110	6	11
H-20111	6	11
H-20111	12	6
H-20112	6	11
H-20112	12	6
SAH-20115	6	11
B-20119	6	13
B-21020	6	13
D-20122	7	13
D-20122	7	16
D-20123	6	1
B-20145	6	9
D-20148	6	9
D-20151	6	9
D-20165	6	9
D-20168	6	9
D-20169	6	9
H-20170	6	9
H-20171	6	9
SAB-20176	6	11
SAG-20183	6	13
H-20184	6	13
D-20185	6	13
D-20189	4	2
H-20190	4	1
H-20192	4	1
H-20194	4	2
H-20195	4	1
D-20198	4	5
D-20199	4	5
H-20200	6	13
D-20201	4	2
H-20204	4	1
H-20204	4	8
SAB-20206	4	1
B-20207	4	1
D-20210	7	16
D-20211	4	1
D-20211	7	16
D-20212	7	16
SAB-20215	4	2
H-20218	4	8
D-20250	4	8
D-20251	4	8
20633	7	7
20638	7	7
20642	7	7
20643	7	7
20644	7	7
20645	7	7
SA-20663	6	11
SA-20665	7	13
SA-20665	7	16
SA-20666	4	1
SA-20666	4	2
SA-20667	7	13
SA-20667	7	16
SA-20668	6	1
SA-20668	7	3
SA-20668	7	13
SA-20669	6	1
SA-20669	7	2
SA-20669	7	16
SA-20671	6	9
SA-20672	6	11
SA-20673	6	11
SA-20674	4	2
SA-20674	7	3
SA-20674	7	16
SA-20675	4	2
SA-20675	4	5
SA-20676	4	2
H-20702	7	19
SA-20710	12	5
D-20730	6	13
D-20732	6	1
D-20732	6	3
D-20732	6	5
B-20733	7	13
B-20733	7	16
B-20734	7	13
B-20734	7	16
D-20736	6	5
H-20738	6	5
D-20741	6	3
D-20741	6	5
D-20742	6	9
G-20745	7	10
B-20749	6	3
B-20750	6	3
SA-20788	4	8
SA-20789	4	8
20793	3	14
D-20852	5	1
D-20853	5	1
H-20867	5	1
SAH-20870	5	1
SAB-20871	5	1
B-20872	5	1
B-20873	5	1
SAB-20874	5	1
D-20875	7	19
D-20876	7	19
SA-20888	5	1
SA-20888	7	2
SA-20888	7	19
SA-20889	5	1
SA-20889	7	19
SA-20890	5	1
D-21095	7	13
D-21095	7	16
D-21097	7	13
D-21097	7	16
SA-21127	6	5
SA-21129	6	1
SA-21130	6	1
SA-21131	6	1
D-21134	12	7
R-21144	7	13
R-21146	7	13
SA-21204	6	7
SA-21205	6	7
SA-21206	6	7
SAH-21210	7	3
SAH-21210	7	19
H-21227	12	7
H-21228	12	7
H-21234	12	4
H-21312	1	3
SA-21321	12	7
H-21340	7	6
H-21341	7	6
H-21363	6	9
H-21364	6	9
B-21381	7	13
D-21382	7	13
H-21383	7	13
D-21384	7	13
H-21385	7	13
H-21386	7	13
H-21387	7	13
D-21388	7	13
B-21389	7	13
B-21390	7	13
D-21391	7	13
D-21394	7	13
D-21395	7	13
SAG-21396	6	5
SAG-21396	6	11
SAG-21396	7	2
SAG-21396	7	3
H-21400	6	13
H-21401	6	13
H-21404	6	3
H-21404	6	5
H-21406	6	1
H-21406	6	3
H-21406	6	5
D-21407	6	3
D-21407	6	5
H-21408	6	11
H-21409	6	9
B-21410	6	11
D-21411	6	5
D-21413	7	13
D-21414	7	13
H-21416	1	5
H-21416	10	1
R-21417	1	2
SAD-21420	10	1
SAD-21421	10	1

NUMERICAL INDEX

GRADER UNIT PARTS LIST

GALION 101 DIESEL MOTOR GRADER

Part No.	Sec.	Page
H-21422	6	1
H-21423	6	1
SA-21424	6	3
SA-21424	6	5
SAH-21445	12	5
D-21472	1	2
D-21473	1	2
D-21474	1	2
SAH-21475	1	2
B-21476	1	2
SA-21482	12	7
SA-21483	1	2
SAH-21549	1	5
H-21550	1	3
H-21550	1	5
H-21552	1	5
SAH-21564	6	5
SAB-21565	6	5
H-21574	1	2
H-21575	1	2
H-21576	1	5
H-21576	10	1
SAH-21577	12	7
SA-21580	1	2
SA-21581	10	1
SA-21582	1	2
21608	7	5
D-21616	1	5
H-21621	1	2
H-21622	1	2
SA-21633	1	5
SA-21653	1	3
D-21658	7	2
SA-21660	6	1
SA-21660	7	2
SA-21660	7	3
SA-21661	6	1
SA-21661	7	2
SA-21661	7	3
D-21662	4	2
D-21662	5	1
D-21662	6	5
D-21662	6	11
D-21662	7	2
SA-21663	4	8
SA-21663	7	2
SA-21663	7	3
D-21665	4	8
D-21665	7	3
SA-21666	4	2
SA-21666	7	3
SA-21669	5	1
SA-21669	7	2
SA-21669	7	3
SA-21670	5	2
SA-21670	7	2
SA-21670	7	3
D-21673	1	3
D-21674	1	3
D-21680	6	11
D-21681	7	19
D-21682	7	19
D-21683	6	5
D-21685	6	3
D-21685	6	5
D-21695	7	3
B-21727	6	3
B-21727	6	5
B-21728	6	3
SAB-21743	10	1
D-21758	6	1
D-21758	6	5
SA-21774	12	7
SA-21806	6	1
D-21808	6	13
SA-21831	6	3
D-21852	1	5
D-21859	6	3
D-21859	6	5
D-21860	1	2
D-21860	10	1
D-21893	5	1
D-21895	6	5
D-21920	3	3
SAH-21977	7	19
D-21984	5	2
D-21999	6	3
D-22005	3	3
D-22006	3	3
D-22007	3	3
H-22018	6	11
H-22019	6	11
D-22115	1	7
SAH-22130	6	11
SAH-22131	6	11
SAH-22132	6	11
SAH-22133	6	11
D-22305	7	2
D-22306	7	2
D-22399	3	3
D-22403	1	5
D-22432	7	10
22510-D	12	5
G-22597	12	7
SAB-22641	9	1
SAB-22642	9	1
B-22643	4	5
D-22650	1	2
D-22650	10	1
SA-22673	3	2
SA-22675	3	2
D-22679	7	3
SA-22715	6	9
SA-22718	6	1
D-22719	7	13
D-22720	7	13
SA-22731	12	7
SA-22732	12	7
D-22733	6	9
D-22761	4	2
D-22776	7	10
D-22777	7	10
D-22780	7	10
D-22781	7	10
D-22783	7	10
D-22783	12	6
D-22784	7	10
D-22785	7	10
D-22786	7	10
H-22788	7	10
H-22789	7	10
SAH-22790	7	10
SAH-22863	12	5
SAH-22864	12	5
SAH-22865	12	5
D-22875	12	5
D-22876	12	5
B-22918	7	10
H-22919	7	10
D-22920	7	10
D-22921	7	10
D-22922	7	10
D-22922	12	6
D-22923	7	10
D-22924	7	10
SA-22928	7	10
SA-22928	7	3
SA-22970	7	2
SA-22971	6	11
SA-22971	7	2
SA-22972	5	2
SA-22972	6	5
SA-22972	7	2
SA-22972	7	3
SA-22973	5	2
SA-22973	6	5
SA-22973	7	2
SA-22973	7	3
SA-22974	4	8
SA-22974	7	2
SA-22975	4	2
SA-22975	7	3
SA-22976	4	2
SA-22976	7	3
SAD-23082	6	5
SAD-23082	6	11
SAD-23083	6	5
SAD-23083	6	9
SAD-23096	5	1
SAB-23104	5	1
D-23151	7	2
D-23171	12	4
D-23211	7	19
D-23212	7	19
D-23214	6	5
D-23214	6	9
SA-23263	12	7
SA-23264	4	8
SA-23264	7	2
SA-23264	7	19
SA-23363	6	8
D-23364	7	2
SA-23365	7	7
SA-23365	7	2
SA-23404	3	2
SA-23406	3	2
D-23410	10	1
D-23411	10	1
D-23474	7	6
D-23474	12	6
G-23482	7	6
G-23482	12	7
B-23483	7	6
B-23483	12	7
SAB-23485	7	6

NUMERICAL INDEX

GRADER UNIT PARTS LIST

GALION 101 DIESEL MOTOR GRADER

Part No.	Sec.	Page
SAB-23485	12	7
H-23487	7	6
H-23487	12	7
D-23488	7	6
D-23488	12	7
SAB-23494	12	5
D-23498	7	6
H-23499	12	7
D-23710	7	10
SA-23711	4	2
SA-23711	4	5
SA-23712	4	2
SA-23712	4	5
SAB-23763	6	3
SAB-23764	6	3
SA-23771	12	4
SA-23775	12	4
SA-23777	12	7
H-23837	7	6
H-23837	7	3
H-23838	7	6
H-23838	7	3
H-23838	12	6
SAH-23949	1	5
SAH-24027	12	5
D-24044	3	4
D-24056	6	9
H-24057	6	9
D-24094	1	7
H-24132	12	4
H-24133	12	4
SA-24177	7	13
B-24180	12	4
SA-24487	12	7
D-24488	3	4
24754	3	10
D-24826	3	4
24853-D	12	5
B-24952	6	8
D-25054	7	10
D-25055	7	10
D-25056	12	7
D-25060	4	2
D-25060	4	5
D-25067	7	6
D-25598	1	8
SAH-25853	1	5
B-26114	7	13
B-26115	7	16
D-26292	7	13
SAB-26435	3	3
H-26468	12	4
D-26477	4	5
SA-26479	3	2
SA-26480	3	2
SAH-26483	12	7
D-26485	12	7
D-26489	7	10
D-26906	7	3
SAB-26922	12	7
SAB-26923	12	7
SAB-26924	12	7
SAB-26930	12	7
SAH-26631	12	7
D-26936	12	7
H-26949	3	6
SA-26978	3	6
SA-26989	3	5
SA-26991	3	6
SA-26992	3	6
SA-26993	3	6
SA-26994	3	6
SA-26995	3	5
SA-26996	3	6
SA-26999	10	1
SA-27000	10	1
SA-27006	3	6
SA-27007	3	5
SA-27008	3	5
SA-27009	3	6
SA-27010	3	6
SA-27011	3	6
SA-27012	3	5
SA-27013	3	6
SA-27014	3	6
SA-27015	3	6
SA-27016	3	6
SA-27017	3	6
SA-27018	3	5
SA-27019	3	5
SA-27020	3	6
SA-27021	3	5
SA-27022	3	5
28294-DB	12	5
28900-D	12	5
30205	3	13
30982-D	12	6
31032	7	5
33345	3	10
33347	3	10
34846	3	10
35728	3	10
35832	3	11
36582	3	10
37323-DX	12	5
37700	3	12
37701	3	12
37702	3	12
37703	3	12
37706	3	12
37707	3	12
37872	3	10
38345	3	10
38367	3	10
40127	3	4
40779	3	4
40844	3	4
43378	3	4
43589	3	4
43852	3	4
48232-D	12	5
50704	1	7
50891-D	3	15
50892-DA	3	15
50893-D	3	15
51322	3	5
51344-V	12	6
51602-D	3	15
54857-DA	3	15
54875-D	12	6
58650	12	2
61470	7	7
63280-D	12	5
63281-D	12	5
P-64-2-10	3	4
P-64-3-46	3	4
P-64-3-55	3	4
P-10-18-71	3	4
103047	3	13
103088	3	10
106495	3	13
106495	3	14
106496	3	10
106497	3	10
106497	3	13
107728	3	13
108579	3	13
110730	3	10
113989	3	10
114603	3	10
114604	3	10
115295	3	11
120622	3	11
124545	3	13
124546	3	10
132929	3	10
134569	3	10
134569	3	11
135616	3	10
140630	3	14
141542	3	14
141543	3	13
142248	3	11
142848	3	10
P-64-3-303	3	4
P-65-1-227	3	4
P-65-2-233	3	4
802696	3	10
802729	3	14
802730	3	13
802731	3	13
802731	3	11
802757	3	13
804076	3	10
804076	3	13
804485	3	14
805057	3	12
805258	3	10
805258	3	11
805790	3	10
805790	3	11
809051	3	10
809062	3	13
809551	3	13
809593	3	13
809614	3	13
809637	3	13
809642	3	13
809644	3	13
809658	3	13
809688	3	13
809698	3	13
809815	3	10
809824	3	13
809945	3	13

NUMERICAL INDEX

GRADER UNIT PARTS LIST

GALION 101 DIESEL MOTOR GRADER

Part No.	Sec.	Page
809961	3	13
811492	3	11
812015	3	13
812016	3	13
812823	3	12
813157	3	14
813496	3	12
813731	3	11
814627	3	14
815018	3	13
816315	3	13
816863	3	11
817216	3	12
817224	3	13
817313	3	13
817314	3	13
817532	3	13
819104	3	13
820524	3	13
820657	3	11
822205	3	11
825227	3	11
825228	3	11
825229	3	11
826319	3	11
826462	3	10
826498	3	11
826938	3	10
828675	3	10
828675	3	13
903203	3	12
907502	3	10
1101726	3	2
1109108	3	3
1835457	3	10
1836330	3	12
1838591	3	11
1839179	3	10
1839180	3	10
1839418	3	10
1841020	3	10
1843456	3	11
1843458	3	11
1843464	3	11
1843465	3	11
1843466	3	11
1843522	3	13
1843655	3	10
1843657	3	10
1843662	3	10
1843663	3	10
1853901	3	14
1855434	3	10
1855701	3	13
1855702	3	12
1855733	3	14
1856614	3	14
1857107	3	13
1858749	3	13
1858752	3	13
1858753	3	13
1858754	3	13
1859967	3	14
1860389	3	10
1860809	3	14
1861076	3	10
1862803	3	13
1862901	3	11
1865603	3	14
1865614	3	14
1865616	3	14
1866970	3	13
1866970	3	11
1869463	3	11
1869467	3	11
1872244	3	12
1872638	3	13
1872866	3	10
1873830	3	12
1874143	3	14
1878415	3	12
1878425	3	12
1880355	3	10
1880635	3	10
1880635	3	13
1880641	3	13
1880642	3	10
1881585	3	10
1881680	3	10
1881682	3	12
1881998	3	10
1881998	3	14
5014690	3	14

DRIVING ENGINE PARTS LIST

Part No.	Sec.	Page
8-E	2	54
H- 156	2	54
ST- 205	2	5
E4- 212	2	47
E4- 216	2	47
E4- 226	2	47
E4- 294	2	48
E4- 295	2	48
E4A- 305	2	47
E4A- 324	2	47
E4A- 351	2	47
E4A- 352	2	47
E4A- 353	2	47
E4A- 372	2	48
E4A- 546	2	47
775-DBXA	2	54
776-DA	2	54
968-D	2	53
1100-C	2	42
1265-C	2	38
1325-EA	2	54
1326-E	2	54
1595-E	2	54
1924-T	2	49
1924-T	2	15
2370-DX	2	5
2557-DAX	2	5
2585-T	2	54
2587-T	2	54
2588-T	2	54
2853-Y	2	15
2853-Y	2	22
3175-D	2	5
3202-DDRX	2	8
3405-H	2	8
Q-3615	2	54
Q-3615	2	10
Q-3625	2	5
QA-3628	2	5
Q-3659	2	5
G-3792	2	6
3972-DX	2	54
3973-D	2	54
4167-T	2	33
4167-T	2	48
H-4213	1	5
4222-D	2	8
4253-D	2	10
4254-DA	2	10
4447-DB	2	54
4734-D	2	54
4819-D	2	12
4988-D	2	7
4993-DA	2	10
4994-DAX	2	10
5024-DBR	2	22
5025-DBR	2	7
5027-DB	2	7
5028-D	2	7
5051-DX	2	20
5124-D	2	54
5312-T3	2	17
5913-D	2	3
5957-DAY	2	8
5957-DAX	2	8
5960-D	2	8
6482-DAY	2	47
6483-DY	2	48
6649-D	1	8
6649-D	1	9
6783-DX	2	48
6963-DX	2	5
6964-D	2	5
6965-DX	2	5
6986-D	2	3
6987-DA	2	3
6988-DA	2	3
6990-D	2	3
6992-D	2	3
7699-TM	2	33
7699-TM	2	38
8000-D	2	26
8008-DX	2	17
8009-D	2	17

GALION 101 DIESEL MOTOR GRADER

Part No.	Sec.	Page
8021-DX	2	16
8023-DX	2	5
8029-D	2	12
8045-D	2	27
8055-DX	2	13
8061-DX	2	7
8062-D	2	7
8063-D	2	7
8064-DAX	2	8
8064-DAY	2	8
8221-D	2	24
8264-DX	1	8
8264-DX	1	9
8265-DX	1	8
8265-DX	1	9
8394-DX	2	49
8413-DX	2	13
8414-D	2	12
8463-DDX	2	12
8473-DAX	2	15
8522-T	2	38
8525-DA	2	23
8609-DX	2	8
8612-D	2	13
8617-DX	2	23
8649-D	2	13
8654-D	2	3
8798-DAMX	2	12
8815-D	2	52
8816-D	2	52
8817-D	2	52
8959-D	2	13
8970-DAX	2	41
8970-DAX	2	45
8971-DA	2	35
8971-DAX	2	35
8972-D	2	35
8973-DX	2	41
8974-DX	2	43
8974-DX	2	45
8976-D	2	36
9118-DX	2	24
9144-DM	1	5
9154-DM	2	20
G-9210	2	52
9257-DX	2	24
9269-D	2	10
9270-DX	2	10
9313-D	2	28
9390-DX	2	20
9412-D	2	35
9453-D	2	31
9454-D	2	31
9625-DM	2	29
PO- 9696	2	10
9982-T	2	27
9982-T	2	28
10319-D	2	10
10429-D	2	3
10720-D	2	54
10722-D	2	54
10725-D	2	54
10730-D	2	54
10951-D	2	7
10961-D	2	17
11657-D	2	5
11669-K	2	54
11820-DAVL	2	53
11844-DA	2	54
11858-DA	2	54
12737-DA	2	54
12978-DA	2	53
12981-DA	2	53
12982-D	2	53
12983-D	2	53
12988-DXVL	2	53
12989-D	2	53
13021-D	2	17
13055-D	2	8
13067-D	2	54
13083-D	2	7
13090-D	2	41
13183-D	2	17
13194-D	2	17
13199-D	2	54
13439-V	2	12
13727-D	2	28
13728-D	2	28
13729-D	2	28
13806-D	2	13
13839-D	2	16
13839-D	2	27
13841-D	2	16
13841-DA	2	27
13842-D	2	16
13897-D	2	13
14186-DA	2	54
14187-DA	2	5
14227-HA	2	54
14602-DX	2	53
14604-DVL	2	53
15042-D	1	8
15042-D	1	9
15943-D	2	54
16077-D	2	3
16445-D	2	17
16445-D	2	29
16445-D	2	31
16518-D	2	29
16883-D	2	53
16885-D	2	53
17063-D	2	33
17564-D	2	17
17565-DA	2	17
18196-D	2	5
18377-D	2	20
18539-D	2	7
18746-DA	2	7
19175-CA	2	5
19305-D	2	23
19306-D	1	9
19306-D	2	23
20000-D	2	38
20289-D	2	5
20290-D	2	5
20293-D	2	5
20296-D	2	5
20299-D	2	5
20300-D	2	5
20301-D	2	6
20303-D	2	5
20306-DX	2	5
20308-D	2	5
20345-D	2	24
20584-DA	2	6
20585-D	2	6
20586-D	2	6
20586-D	2	23
21239-D	2	53
21259-D	2	5
21264-D	2	54
21314-DX	2	47
21342-D	2	48
21388-DBX	2	47
21393-D	2	47
21394-D	2	47
21409-DB	2	47
21438-DBXA	2	54
21725-D	2	54
21839-D	2	5
22383-D	2	3
22507-D	2	29
22508-D	2	29
22509-D	2	29
22510-D	2	29
23007-V	2	15
23007-V	2	16
23139-V	2	16
B-23483	2	10
D-23948	2	13
23977-DA	2	17
23995-DA	2	17
24017-D	2	5
24473-D	2	49
24603-D	2	48
24672-D	2	20
24805-D	2	24
24909-D	2	10
24916-D	2	22
24917-D	2	22
24941-D	2	5
24943-D	2	8
24961-D	2	7
24962-D	2	7
24964-D	2	7
24965-DA	2	7
25038-HA	2	20
25038-HA	2	21
25043-DB	2	7
25063-DA	2	13
25076-D	2	10
25082-DD	2	12
25083-DBR	2	8
25086-DA	2	12
25090-DD	2	7
25091-DA	2	8
25092-DA	2	8
25093-DA	2	8
25094-D	2	10
25095-D	2	8
25096-D	2	8
25130-D	2	13
25131-D	2	13
25132-D	2	12
25134-DA	2	10

DRIVING ENGINE PARTS LIST

GALION 101 DIESEL MOTOR GRADER

Part No.	Sec.	Page
25138-DAX	2	13
25140-DBX	2	13
25176-D	2	42
25323-D	2	8
25352-D	2	16
25466-D	2	54
25948-D	2	20
25969-DA	2	21
26033-DA	2	5
26242-D	2	29
26304-H	2	53
26480-D	2	53
26916-D	2	10
27051-D	2	54
27129-DD	2	7
27140-DDX	2	7
27141-D	2	7
27159-DB	2	51
27307-D	2	3
27311-D	2	48
27445-DAX	2	20
27452-D	2	20
27618-D	2	49
27618-D	2	15
27648-D	2	5
27843-D	2	3
27927-DA	2	25
28173-DA	2	8
28737-DX	2	10
28772-D	2	27
28781-D	2	16
28797-D	2	12
28809-D	2	27
29340-D	2	49
29371-D	2	13
29501-DA	2	27
29538-D	2	29
29538-D	2	31
29565-D	2	12
29764-D	2	13
29873-D	2	49
29874-D	2	49
29898-D	2	26
29899-D	2	17
29902-DX	2	20
30088-DX	2	50
30371-D	2	54
30372-D	2	54
30376-D	2	54
30397-D	2	12
30402-DX	2	26
30509-D	2	54
30824-D	2	5
30982-D	2	5
31121-D	2	25
31458-D	2	8
31536-D	2	8
31636-D	2	20
31729-D	2	12
32032-DXA	2	47
32282-DOR	2	8
32284-DA	2	8
32307-DA	2	8
32308-D	2	8
32309-D	2	8
32319-D	2	17
32332-D	2	8
32333-D	2	8
32349-D	2	5
32370-D	2	12
32444-D	2	7
32445-D	2	8
32447-DA	2	7
32448-D	2	7
32454-D	2	8
32454-D	2	12
32466-DX	2	7
32467-DX	2	7
32468-DX	2	7
32479-D	2	22
32482-DB	2	7
32485-D	2	7
32486-DAX	2	7
32493-D	2	25
32569-D	2	5
32572-DAX	2	20
32574-D	2	20
32575-D	2	20
32576-DX	2	20
32577-D	2	20
32578-D	2	20
32581-DXA	2	20
32582-D	2	20
32585-DA	2	20
32586-D	2	20
32587-D	2	20
32588-D	2	20
32592-D	2	21
32606-DA	2	20
32685-D	2	7
32713-D	2	8
32941-D	2	54
32942-D	2	10
33794-D	2	10
33814-D	2	5
35691-DX	2	20
36092-D	2	21
36796-D	2	13
36932-DA	2	53
36933-DA	2	53
36935-D	2	53
37148-D	2	25
37150-D	2	25
37152-D	2	25
37165-D	2	35
37165-D	2	8
37165-D	2	26
37165-D	2	29
37291-D	2	46
37291-D	2	49
37323-D	2	35
37323-DX	2	35
37323-DX	2	26
37323-D	2	26
37323-DX	2	27
37323-DX	2	29
37323-DX	2	31
37508-D	2	53
37634-D	2	5
37749-DMX	2	54
38026-DM	2	26
38026-DMX	2	26
38026-DM	2	29
38026-DMX	2	29
38609-DA	2	46
38763-H	2	7
39397-D	2	13
39401-D	2	10
39422-D	2	10
39482-D	1	8
39482-D	1	9
39523-D	2	10
39577-DA	2	27
39584-DX	2	26
39677-D	2	27
39677-D	2	28
39756-D	2	12
39757-D	2	12
39761-D	2	12
39762-D	2	12
39806-DX	2	54
39810-D	2	12
41574-DCX	2	17
42158-D	2	3
42215-D	2	21
42219-D	2	8
42437-D	1	8
42610-D	2	3
42611-D	2	3
42687-DX	2	10
42687-DY	2	10
42688-DAX	2	10
42690-DAX	2	10
42694-D	2	8
42695-DA	2	8
42717-D	2	12
42733-D	2	12
42739-DA	2	15
42739-DA	2	22
42746-D	2	22
42747-D	2	7
42748-D	2	7
42749-D	2	22
42750-D	2	22
42765-DA	2	25
42766-D	2	25
42767-D	2	21
42772-D	2	21
42791-DA	2	17
43002-D	2	25
43026-DA	2	8
43113-D	2	10
43192-DA	2	25
45001-D	2	49
45003-D	2	49
45110-D	2	20
45285-DA	2	16
45286-D	2	16
45775-D	2	35
45982-DX	2	5
45993-D	2	5
46053-D	2	17
46054-DA	2	17
46129-D	2	13
46212-D	2	22

GALION 101 DIESEL MOTOR GRADER

Part No.	Sec.	Page
46213-D	2	22
46250-D	2	13
46250-D	2	26
46250-D	2	31
46583-D	2	26
46584-DX	2	26
46584-DX	2	31
46591-DA	2	28
46606-DX	2	16
46785-D	2	48
47294-D	2	48
47295-D	2	48
47408-D	2	47
47409-D	2	47
47413-DX	2	46
47413-DY	2	46
47417-DX	2	47
47424-D	2	47
47425-DX	2	47
47425-DY	2	47
47427-D	2	47
47428-D	2	47
47431-DB	2	47
47432-D	2	47
47433-DX	2	47
47438-DA	2	47
47439-DAX	2	47
47442-D	2	48
47449-DAY	2	46
47452-D	2	47
47453-D	2	46
47454-D	2	47
47461-D	2	48
47462-D	2	48
47464-D	2	48
47465-D	2	48
47468-D	2	48
47470-D	2	48
47473-D	2	48
47474-D	2	48
47475-DA	2	48
47822-D	2	48
48138-D	2	13
48339-D	2	47
48340-DA	2	47
48341-D	2	47
48342-DA	2	47
48356-D	1	8
48356-D	1	9
48358-D	1	8
48358-D	1	9
48472-D	2	47
48756-D	2	10
48757-D	2	10
48758-D	2	10
48759-D	2	10
48760-D	2	10
48761-D	2	10
48762-D	2	10
48763-D	2	10
48906-D	1	5
49026-D	2	12
49090-DXR	2	47
49091-DX	2	48
49091-DZ	2	48
49092-D	2	48
49093-DX	2	48
49094-D	2	46
49094-D	2	48
49125-D	2	46
49359-D	2	49
49416-DX	2	47
49418-D	2	47
49419-D	2	47
49420-DX	2	47
49423-D	2	47
49464-DA	2	50
49593-D	2	47
49791-D	2	46
49952-D	2	12
50126-D	2	3
50129-DA	2	3
50134-D	2	3
50135-D	2	3
50136-D	2	3
50137-D	2	3
50138-DX	2	3
50139-D	2	3
50140-D	2	3
50273-D	2	5
50283-DR	2	8
50357-D	2	12
50360-D	2	49
50371-D	2	17
50372-DX	2	17
50374-D	2	17
50375-D	2	17
50376-D	2	17
50377-DX	2	17
50404-D	2	16
50408-D	2	12
50410-DA	2	12
50410-DA	2	16
50411-D	2	12
50412-D	2	26
50412-D	2	31
50478-D	2	12
50486-D	2	13
50487-DX	2	12
50529-D	2	51
50607-DX	2	26
50607-D	2	26
50607-DX	2	26
50620-D	2	25
50621-DX	2	25
50622-DX	2	25
50623-DX	2	25
50624-DX	2	25
50626-D	2	25
50664-D	2	7
50665-DX	2	7
50668-D	2	7
50669-D	2	7
50670-DX	2	22
50672-D	2	22
50673-D	2	22
50674-D	2	22
50675-D	2	7
50677-D	2	8
50677-D	2	13
50678-D	2	22
50682-D	2	21
50683-D	2	21
50683-DX	2	21
50687-D	2	13
50688-D	2	13
50688-D	2	15
50689-D	2	15
50697-D	2	15
50698-D	2	15
50705-D	2	15
50790-D	2	5
50801-D	2	20
50802-D	2	20
50803-D	2	20
50807-D	2	20
50826-D	2	12
50827-D	2	23
50829-D	2	12
50941-V	2	33
51066-DBX	2	17
51183-DA	2	16
51203-DA	2	17
51205-D	2	16
51223-D	2	17
51234-DA	2	15
51344-V	2	17
51515-D	2	17
51516-D	2	17
51527-D	2	24
51666-D	2	47
51667-D	2	48
51704-D	2	20
51824-D	2	16
52033-D	2	3
52128-D	2	26
52176-DC	2	23
52215-D	2	21
52514-D	2	15
52515-DA	2	15
52519-D	2	15
52520-D	2	15
52537-D	1	9
52605-D	2	12
52606-D	2	12
52612-D	2	25
52613-D	2	25
52621-DX	2	23
52623-D	2	23
52624-D	2	23
52626-D	2	23
52640-D	1	9
52745-V	2	33
52855-D	2	17
52969-D	2	29
53079-D	2	20
53083-D	2	15
53136-D	2	21
53262-D	2	49
53262-D	2	15
53263-DA	2	49
53264-D	2	49
53380-D	2	7
53386-DX	2	21
53387-DX	2	21

DRIVING ENGINE PARTS LIST

GALION 101 DIESEL MOTOR GRADER

Part No.	Sec.	Page
53388-DX	2	21
53401-DX	2	10
53402-DX	2	10
53410-DX	2	23
53411-D	2	23
53413-D	2	22
53414-DX	2	23
53416-D	2	23
53417-D	2	23
53459-DA	2	20
53612-D	2	10
53643-D	2	12
53644-DA	2	12
53672-DX	2	15
53673-DX	2	15
53836-D	2	20
53837-DX	2	20
53840-D	2	20
53872-D	2	13
54086-D	2	23
54158-D	2	7
54210-D	1	8
54210-D	1	9
54263-D	2	50
54267-D	2	50
54271-D	2	50
54290-D	2	26
54486-D	2	17
54682-DA	2	21
54964-D	2	15
55015-D	2	47
55261-D	2	5
55303-DX	2	17
55354-DA	2	23
55358-D	2	6
55780-DA	2	48
55855-D	2	47
55860-DA	2	54
55870-D	2	3
55872-D	2	3
55999-DX	2	8
56000-DX	2	50
56066-D	2	48
56107-D	2	15
56291-D	2	25
56500-D	2	50
56542-DX	2	20
56679-D	2	20
57308-D	2	13
57314-D	2	48
57484-D	2	17
57926-DX	2	47
57942-DX	2	8
58056-DMX	2	51
58058-DM	2	51
58099-DA	2	52
58101-D	2	52
58103-D	2	52
58220-DX	2	54
58253-D	2	8
58458-D	2	7
58511-D	2	12
58676-D	2	41
58835-D	2	20
58836-D	2	20
58837-D	2	20
58840-DX	2	20
58843-DX	2	20
58859-DX	2	20
59217-DX	2	51
59219-DX	2	51
59220-DX	2	51
59241-D	2	20
59480-D	2	12
59481-D	2	13
59482-D	2	12
59483-D	2	12
59484-D	2	13
59485-D	2	13
59529-D	2	12
59602-D	2	37
59603-D	2	37
59604-D	2	38
59606-D	2	37
59608-D	2	37
59609-D	2	36
59609-D	2	43
59610-D	2	42
59611-D	2	41
59613-D	2	36
59614-DA	2	36
59615-DA	2	36
59616-D	2	36
59617-D	2	37
59618-D	2	36
59619-DX	2	39
59619-DX	2	44
59623-D	2	39
59624-D	2	39
59625-D	2	39
59627-D	2	41
59631-D	2	39
59633-D	2	39
59634-D	2	39
59635-D	2	39
59636-D	2	41
59638-D	2	39
59640-D	2	39
59642-D	2	39
59644-DA	2	39
59645-D	2	39
59646-D	2	39
59647-D	2	36
59649-D	2	36
59650-DA	2	39
59652-D	2	39
59653-D	2	36
59657-D	2	36
59658-D	2	36
59659-D	2	36
59660-D	2	36
59663-D	2	39
59664-D	2	39
59665-D	2	39
59666-DX	2	36
59666-DX	2	43
59667-D	2	36
59670-D	2	38
59673-D	2	38
59674-D	2	38
59675-D	2	41
59677-DX	2	33
59677-DX	2	43
59678-D	2	33
59679-D	2	33
59680-D	2	33
59681-D	2	33
59682-D	2	33
59683-D	2	33
59684-D	2	33
59685-D	2	33
59686-D	2	33
59686-DX	2	33
59686-DX	2	43
59687-D	2	33
59688-D	2	33
59688-D	2	41
59689-D	2	33
59690-D	2	33
59691-DX	2	33
59693-DX	2	33
59694-D	2	35
59697-D	2	42
59698-D	2	42
59701-D	2	35
59702-D	2	35
59703-D	2	35
59704-D	2	42
59705-D	2	42
59707-D	2	35
59708-D	2	35
59709-D	2	41
59710-D	2	41
59711-D	2	41
59712-D	2	41
59713-DX	2	41
59713-D	2	41
59713-DX	2	44
59714-D	2	41
59715-D	2	41
59716-D	2	41
59717-D	2	41
59719-DA	2	36
59720-D	2	36
59721-D	2	36
59722-D	2	36
59723-D	2	36
59724DAX	2	36
59726-DX	2	47
59727-D	2	35
59729-D	2	42
59730-D	2	43
59731-D	2	43
59732-D	2	43
59733-DAX	2	42
59733-DAX	2	43
59734-D	2	42
59736-D	2	42
59737-D	2	42
59738-D	2	42
59739-D	2	42
59740-D	2	42
59741-DA	2	43
59742-DX	2	43
59743-D	2	43

NUMERICAL INDEX

DRIVING ENGINE PARTS LIST

GALION 101 DIESEL MOTOR GRADER

Part No.	Sec.	Page
59744-D	2	43
59745-DX	2	42
59746-DA	2	42
59747-D	2	43
59749-D	2	43
59750-D	2	35
59750-D	2	43
59751-D	2	43
59752-DA	2	35
59753-D	2	35
59754-D	2	35
59755-D	2	35
59756-D	2	35
59757-D	2	35
59760-DX	2	42
59762-DX	2	42
59762-DX	2	44
59763-D	2	35
59767-D	2	35
59772-D	2	35
59781-D	2	35
59782-DX	2	35
59784-DA	2	35
59785-DA	2	45
59793-D	2	35
60014-DAX	2	17
60023-DX13½	2	26
60094-D	2	47
60143-DAX	2	26
60144-DX	2	26
60430-DX	2	26
60870-D	2	24
60870-D	2	29
60871-D	2	24
60872-D	2	24
60876-D	2	24
60877-D	2	24
60878-D	2	24
61009-DMX	2	51
61011-DM	2	51
61012-DM	2	51
61013-DMX	2	51
61014	2	32
61014-DMX	2	51
61015-DMX	2	8
61016-DM	2	51
61017-DMX	2	51
61020-DM	1	5
61021-DM	2	54
61025-D	2	35
61140-DM	2	17
61140-DM	2	20
61141-DM	2	20
61142-DM	2	21
61143-DM	2	20
61144-DM	2	21
61145-DM	2	21
61146-DM	2	21
61208-D	2	25
61209-D	2	25
61808-D	2	7
61921-D	2	35
61923-DX	2	35
61924-D	2	35
61926-DAX	2	39
61926-DAX	2	44
61927-D	2	42
61928-DX	2	41
61929-D	2	41
61932-D	2	41
61933-DX	2	41
61939-D	2	35
61939-D	2	36
61940-D	2	42
61941-D	2	35
61942-D	2	42
61943-D	2	35
61946-D	2	35
61948-DX	2	35
61951-D	2	35
62474-D	2	8
62474-D	1	9
62493-D	2	48
62578-D	2	10
62939-D	2	31
62943-D	2	41
62945-DA	2	28
62946-DA	2	28
62948-D	2	28
62949-D	2	28
63035-D	2	25
63037-DAX	2	29
63040-D	2	25
63041-DX	2	25
63042-DX	2	25
63043-DX	2	25
63044-DX	2	25
63045-DAX	2	29
63047-DAX	2	29
63049-DX	2	29
63279-DX	2	12
63427-DX	2	41
63647-DX	2	26
64043-D	2	36
64044-D	2	35
64060-D	2	35
64060-D	2	43
64070-D	2	36
64159-D	2	52
64520-DA	2	28
64521-D	2	28
64576-D	2	31
64577-D	2	31
64578-D	2	31
64643-D	2	29
64643-D	2	31
64676-D	2	36
64679-D	2	39
64870-D	2	43
64871-D	2	43
64964-D	2	29
64996-D	1	9
65027-D	2	41
65028-D	2	41
65029-D	2	41
65056-D	2	42
65066-D	2	35
65210-D	2	43
65314-DI	2	31
65355-D	2	37
65505-DMX	2	31
65953-DX	2	29
66010-D	2	36
66012-D	2	36
66108-D	2	43
66111-D	2	39
66360-D	2	17
66392-D	2	39
67459-DMX	2	29
67460-DMX	2	29
67527-DM	1	9
67864-DM	2	36
67865-DM	1	9
91406-HA	2	51
91406-HA	2	3
91406-H	2	5

☆ U. S. GOVERNMENT PRINTING OFFICE : O—1952

COMMANDO BASIS 101 GI. BA. RESERVEDELEN DEPOT PEL.