TECHNICAL MANUAL

ORGANIZATIONAL, DIRECT SUPPORT, AND GENERAL SUPPORT MAINTENANCE REPAIR PARTS AND SPECIAL TOOLS LIST

(INCLUDING DEPOT MAINTENANCE REPAIR PARTS AND SPECIAL TOOLS)

FOR

ELECTRONIC COUNTER AN/USM-459

(NSN 6625-01-061-8928)

DISTRIBUTION STATEMENT A – Approved for public release, distribution is unlimited

HEADQUARTERS, DEPARTMENT OF THE ARMY
1 JANUARY 1986

CHANGE No. 1

Headquarters
Department of the Army
Washington, D.C., 13 January 2006

ORGANIZATIONAL, DIRECT SUPPORT, AND GENERAL SUPPORT MAINTENANCE REPAIR PARTS AND SPECIAL TOOLS LIST (INCLUDING DEPOT MAINTENANCE REPAIR PARTS AND SPECIAL TOOLS)

FOR

ELECTRONIC COUNTER AN/USM-459

(NSN 6625-01-061-8928)

HAZARDOUS MATERIAL INFORMATION – This document has been reviewed for the presence of solvents used as cleaning solutions containing hazardous materials defined by the EPCRA 302 and 313 lists by the AMCOM G-4 (Logistics) Environmental Division. As of the base document, dated 1 January 1986, all references to solvents containing hazardous materials have been removed from this document by substitution with non-hazardous or less hazardous materials where possible.

OZONE DEPLETING CHEMICAL INFORMATION – This document has been reviewed for the presence of Class I ozone depleting chemicals by AMCOM G-4 (Logistics) Environmental Division. As of the base document, dated 1 January 1986, all references to Class I ozone depleting chemicals have been removed from this document by substitution with chemicals that do not cause atmospheric ozone depletion.

DISTRIBUTION STATEMENT A – Approved for public release, distribution is unlimited

TM 11-6625-2941-24P, dated 1 January 1986 is changed as follows:

1. Remove old pages and insert new pages as indicated below. New or changed material is indicated by a vertical bar in the outer margin of the page.

Remove Pages	Insert Pages
---	A/(B blank)
i/(ii blank)	i, ii
DA Forms 2028-2	DA Forms 2028
Cover	Cover

2. File this change sheet in front of the publication for reference purposes.

By Order of the Secretary of the Army:

PETER J. SCHOOMAKER
General, United States Army
Chief of Staff

Official:

SANDRA R. RILEY
Administrative Assistant to the
Secretary of the Army
0533305

Distribution:

To be distributed in accordance with the initial distribution number (IDN) 363373, requirements for TM 11-6625-2941-24P.

INSERT LATEST CHANGED PAGES. DESTROY SUPERSEDED PAGES.

LIST OF EFFECTIVE PAGES

NOTE

ON CHANGED PAGES, THE PORTION OF THE TEXT AFFECTED BY THE LATEST CHANGE IS INDICATED BY A VERTICAL LINE OR OTHER CHANGE SYMBOL IN THE OUTER MARGIN OF THE PAGE.

Date of issue for original and changed pages are:

Original	0	1 January 1986
Change	1	13 January 2006

Total number of pages in this publication is 76 consisting of the following:

Page No.	*Change No.
Cover	1
A / (B blank)	1
i, ii	1
1 thru 4	0
Fig. 1 (Sheet 1 thru 10)	0
1-1 thru 1-4	0
Fig. 2 (Sheet 1 thru 4)	0
2-1, 2-2	0
Fig. 3 (Sheet 1, 2)	0
3-1, 3-2 / (3-3 blank)	0
Fig. 4	0
4-1	0
4-2 / (4 / 3 blank)	0
Fig. 5 (Sheet 1 thru 5)	0
5-1 thru 5-3	0
Fig. 6 (Sheet 1 thru 3)	0
6-1, 6-2	0
I-1 thru I-13/(14 blank)	0

* Zero in this column indicates an original page.

Technical Manual
No. 11-6625-2941-24P

Headquarters
Department of the Army
Washington, D.C., 1 January 1986

ORGANIZATIONAL, DIRECT SUPPORT, AND GENERAL SUPPORT MAINTENANCE REPAIR PARTS AND SPECIAL TOOLS LIST (INCLUDING DEPOT MAINTENANCE REPAIR PARTS AND SPECIAL TOOLS)

FOR

ELECTRONIC COUNTER AN/USM-459

(NSN 6625-01-061-8928)

REPORTING ERRORS AND RECOMMENDING IMPROVEMENTS

You can help improve this manual. If you find any mistakes or if you know of a way to improve the procedures, please let us know. Mail your letter or DA Form 2028 (Recommended Changes to Publications and Blank Forms) directly to: Commander, U. S. Army Aviation and Missile Command, AMSAM-MMC-MA-NP, Redstone Arsenal, AL 35898-5000. A reply will be furnished to you. You may also provide DA Form 2028 information to AMCOM via email, fax or the World Wide Web. Our fax number is: DSN 788-6546 or Commercial 256-842-6546. Our email address is: 2028@redstone.army.mil. Instructions for sending an electronic 2028 may be found at the back of this manual immediately preceding the hardcopy 2028. For the World Wide Web use: https://amcom2028.redstone.army.mil.

HAZARDOUS MATERIAL INFORMATION

This document has been reviewed for the presence of solvents used as cleaning solutions containing hazardous materials defined by the EPCRA 302 and 313 lists by the AMCOM G-4 (Logistics) Environmental Division. As of the base document, dated 1 January 1986, all references to solvents containing hazardous materials have been removed from this document by substitution with non-hazardous or less hazardous materials where possible.

OZONE DEPLETING CHEMICAL INFORMATION

This document has been reviewed for the presence of Class I ozone depleting chemicals by AMCOM G-4 (Logistics) Environmental Division. As of the base document, dated 1 January 1986, all references to Class I ozone depleting chemicals have been removed from this document by substitution with chemicals that do not cause atmospheric ozone depletion.

DISTRIBUTION STATEMENT A – Approved for public release, distribution is unlimited

*** This manual supersedes TM 11-6625-2941-24P, 10 March 1981.**

TABLE OF CONTENTS

			Page	Illus Figure
SECTION	I.	Introduction	1	
	II.	Repair Parts List	1-1	
GROUP	00	Electronic Counter AN/USM-459.	1-1	
	01	Electronic Counter TS-3662/U.	1-1	
		0101 Circuit Card Assembly A1(Motherboard).	2-1	
		0102 Circuit Card Assembly A2(Power Supply)	3-1	
		0103 Circuit Card Assembly A3(Oscillator).	4-1	
		0104 Circuit Card Assembly A8(“C” Channel Input)	5-1	
		0105 Circuit Card Assembly A12(“A-B” Channel Input)	6-1	
SECTION	III.	Special Tools List (Not applicable)		
	IV.	National Stock Number and Part Number Index	I-1	

SECTION I

INTRODUCTION

1. Scope

This manual lists and authorizes spares and repair parts; special tools; special test, measurement, and diagnostic equipment (TMDE); and other special support equipment required for performance of organizational, direct support, and general support maintenance of the PP-7545A/U. It authorizes the requisitioning, issue, and disposition of spares, repair parts and special tools as indicated by the source, maintenance and recoverability (SMR) codes.

2. General

This Repair Parts and Special Tools List is divided into the following sections:

a. *Section II. Repair Parts List.* A list of spares and repair parts authorized by this RPSTL for use in the performance of maintenance. The list also includes parts which must be removed for replacement of the authorized parts. Parts lists are composed of functional groups in ascending numeric sequence, with the parts in each group listed in ascending item number sequence. Figure numbers are listed directly beneath the group header.

b. Section III. Special Tools List. Not applicable.

c, *Section IV, National Stock Number and Part Number Index.* A list, in National item identification number (NIIN) sequence, of all National stock numbered items appearing in the listing, followed by a list in alphameric sequence of all part numbers appearing in the listings. National stock numbers and part numbers are cross-referenced to each illustration figure and item number appearance.

3. Explanation of Columns (Section II and III)

a. *Item No. (Column (1)).* Indicates the number used to identify items called out in the illustration.

b. SMR Code (Column (2)). The source, maintenance, and recoverability (SMR) code is a five-position code containing supply/requisitioning information, maintenance category authorization criteria, and disposition instruction, as shown in the following breakout:

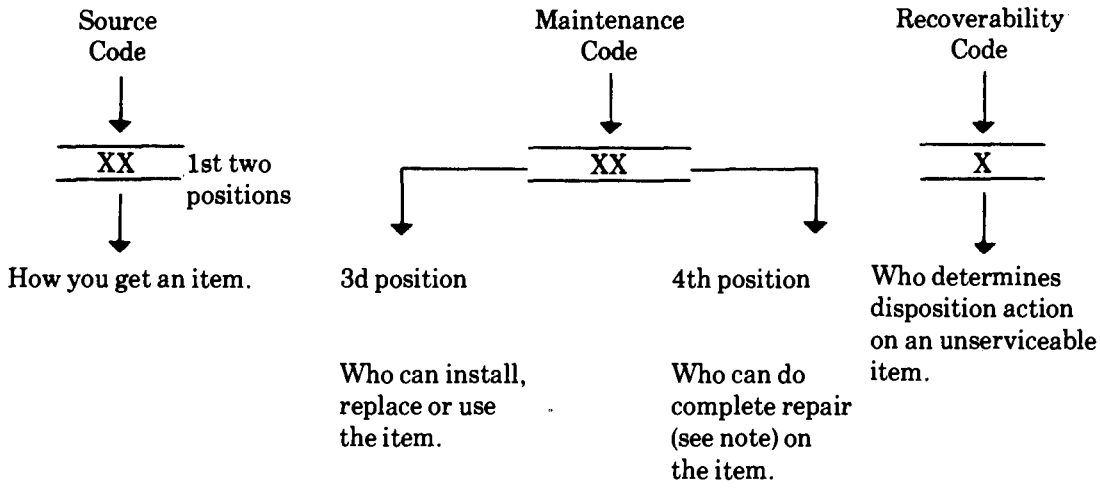

NOTE

Complete repair: Maintenance capacity, capability, and authority to perform all corrective maintenance tasks of the "Repair" function in a use/user environment in order to restore serviceability to a failed item.

(1) *Source code.* The source code tells you how to get an item needed for maintenance, repair, or overhaul of an end item/equipment. Explanations of source codes follows:

Code	*Explanation*
PA PB PC PD PE PF PG	Stocked items; use the applicable NSN to request/requisition items with these source codes. They are authorized to the category indicated by the code entered in the third position of the SMR code. **NOTE** Items coded PC are subject to deterioration.
KD KF KB	Items with these codes are not to be requested/requisitioned individually. They are part of a kit which is authorized to the maintenance category indicated in the third position of the SMR code. The complete kit must be requisitioned and applied.
MO—Made at org/AVUM category MF—Made at DS/AVUM category MH—Made at GS category ML—Made at Specialized Repair Activity (SRA) MD—Made Depot	Items with these codes are not to be requested/requisitioned individually. They must be made from bulk material which is identified by the part number in the description and usable on code (UOC) column and listed in the Bulk Material group of the repair parts list. If the item is authorized to you by the third position code of the SMR code, but the source code indicates it is made at a higher category, order the item from the higher category of maintenance.
AO—Assembled by org/AVUM category AF—Assembled by DS/AVIM category AH—Assembled by GS category AL—Assembled by SRA AD—Assembled by Depot	Items with these codes are not to be requested/requisitioned individually. The parts that make up the assembled item must. be requisitioned or fabricated and assembled at the category of maintenance indicated by the source code. If the disposition code of the SMR code authorizes you to replace the item, but the source code indicates the item is assembled at a higher category, order the item from the higher category of maintenance.

Code *Explanation*

XA—Do not requisition an "XA" coded item. Order its next higher assembly.

XB—If an "XB" item is not available from salvage, order it using the FSCM and part number given.

XC—Installation drawing, diagram, instruction sheet, field service drawing, that is identified by manufacturers part number.

XD–Item is not stocked. Order an “XD” coded item through normal supply channels using the FSCM and part number given, if no NSN is available.

NOTE

Cannibalization or controlled exchange, when authorized, may be used as a source of supply for items with the above source codes, except for those source coded “XA” or those aircraft support items restricted by requirements of AR 750-1.

(2) *Maintenance code.* Maintenance codes tell you the category of maintenance authorized to USE and REPAIR support items. The maintenance codes are entered in the third and fourth positions of the SMR code as follows:

(a) The maintenance code entered in the third position tells you the lowest maintenance category authorized

to remove, replace, and use an item. The maintenance code entered in the third position will indicate authorization to one of the following categories of maintenance.

Code *Application/Explanation*

C—Crew or operator maintenance done within organizational or aviation maintenance.
O–Organizational or aviation unit category can remove, replace, and use the item.
F—Direct support or aviation intermediate category can remove, replace, and use the item.
H—General support category can remove, replace, and use the item.
L—Specialized repair activity can remove, replace, and use the item.
D—Depot category can remove, replace, and use the item.

(b) The maintenance code entered in the fourth position tells whether or not the item is to be repaired and identifies the lowest maintenance category with the capability to do complete repair (i.e., perform all authorized repair functions). This position will contain one of the following maintenance codes.

NOTE

Some limited repair may be done on the item at a lower category of maintenance, if authorized by the Maintenance Allocation Chart (MAC) and SMR codes.

Code *Application/Explanation*

O–Organizational or aviation unit is the lowest category that can do complete repair of the item.
F—Direct support or aviation intermediate is the lowest category that can do complete repair of the item.
H—General support is the lowest category that can do complete repair of the item.
L–Specialized repair activity (designate the specialized repair activity) is the lowest category that can do complete repair of the item.
D—Depot is the lowest category that can do complete repair of the item.
Z–Nonreparable. No repair is authorized.
B—No repair is authorized. (No parts or special tools are authorized for the maintenance of a "B" coded item). However, the item may be reconditioned by adjusting, lubricating, etc., at the user category.

(3) *Recoverability code.* Recoverability codes are assigned to items to indicate the disposition action on unserviceable items. The recoverability code is entered in the fifth position of the SMR Code as follows:

Recoverability codes *Application/Explanation*

Z—Nonreparable Item. When unserviceable, condemn and dispose of the item at the category of maintenance shown in the third position of SMR Code.
O—Reparable item. When uneconomically reparable, condemn and dispose of the item at organizational or aviation unit category.
F—Reparable item. When uneconomically reparable, condemn and dispose of the item at direct support or aviation intermediate category.
H—Reparable item. When uneconomically reparable, condemn and dispose of the item at general support category.
D—Reparable item. When beyond lower category repair capability, return to depot. Condemnation and disposal of item not authorized below depot category.
L—Reparable item. Condemnation and disposal not authorized below specialized repair activity (SRA).
A—Item requires special handling or condemnation procedures because of specific reasons (e.g., precious metal content, high dollar value, critical material, or hazardous material). Refer to appropriate manuals/directives for specific instructions.

c. FSCM (Column (3)). The Federal Supply Code for Manufacturer (FSCM) is a 5-digit numeric code which is used to identify the manufacturer, distributor, or Government agency, etc., that supplies the item.

d. Part Number (Column (4)). Indicates the primary number used by the manufacturer (individual, company, firm, corporation, or Government activity), which controls the design and characteristics of the item by means of its engineering drawings, specifications, standards, and inspection requirements to identify an item or range of items.

NOTE

When you use a NSN to requisition an item, the item you receive may have a different part number from the part ordered.

e. Description and Usable on Code (UOC) (Column (5)). This column includes the following information.

(1) The Federal item name and, when required, a minimum description to identify the item.

(2) The statement "END OF FIGURE" appears just below the last item description in Column (5) for a given figure in both section II and section III.

f. Qty (Column (6)). Indicates the quantity of the item used in the breakout shown on the illustration figure, which is prepared for a functional group, sub functional group, or an assembly. A "V" appearing in this column in

lieu of a quantity indicates that the quantity is variable and the quantity may vary from application to application.

4. Explanation of Columns (Section IV)

a. National Stock Number (NSN) Index.

(1) *Stock number column.* This column lists the NSN by National item identification number (NIIN) sequence. The NIIN consists of the last nine digits of the NSN. When using this column to locate an item, ignore the first four digits of the NSN. When requisitioning items use the complete NSN (13 digits).

(2) *Fig. column.* This column lists the number of the figure where the item is identified/located. The illustrations are in numerical sequence in sections II and III.

(3) *Item column.* The item number identifies the item associated with the figure listed in the adjacent Fig. column. This item is also identified by the NSN listed on the same line,

b. Part Number Index. Part numbers in this index are listed by part number in ascending alphameric sequence.

(1) *FSCM column.* This column lists the Federal supply code for manufacturer (FSCM).

(2) *Part number column.* This column indicates the part number assigned to the item.

(3) *Stock number column.* This column lists the National stock number for the associated part number and manufacturer identified in the part number and FSCM columns to the left.

(4) *Fig. column.* This column lists the number of the figure where the item is identified/located in sections II and III.

(5) *Item column.* The item number is that number assigned to the item as it appears in the figure referenced in the adjacent figure number column.

5. Special Information

a. Associated Publications. The publication listed below pertains to the AN/USM-459 and its components: TM 11-6625-2941-14&P, Counter, Electronic Digital Readout AN/USM-459.

b. National Stock Numbers. National stock numbers (NSN's) that are missing from P source coded items have been applied for an will be added to this TM by future change/revision when they are entered in the Army Master Data File (AMDF). Until the NSN's are established and published, submit exception requisitions to: Commander, US Army Communications-Electronics Command and Fort Monmouth, ATTN: AMSEL-MM, Fort Monmouth, NJ 07703-5006 for the part required to support your equipment,

6. How to Locate Repair Parts

a. When National stock number or part number is not known.

(1) *First.* Using the table of contents, determine the assembly group or subassembly group to which the item belongs, This is necessary since figures are prepared for assembly groups and subassembly groups, and listings are divided into the same groups.

(2) *Second.* Find the figure covering the assembly group or subassembly group to which the item belongs.

(3) *Third.* Identify the item on the figure and note the item number.

(4) *Fourth.* Refer to the Repair Parts List for the figure to find the part number for the item number noted on the figure.

(5) *Fifth.* Refer to the Part Number Index to find the NSN, if assigned.

b. When National stock number or part number is known.

(1) *First.* Using the index of National stock numbers and part numbers, find the pertinent National stock number or part number. The NSN index is in National item identification number (NIIN) sequence (para *4a(l)).* The part numbers in the part number index are listed in ascending alphameric sequence (para *4b).* Both indexes cross-reference you to the illustration figure and item number of the item you are looking for.

(2) *Second.* After finding the figure and item number, verify that the item is the one you're looking for, then locate the item number in the repair parts list for the figure.

7. Abbreviations

Not applicable.

NOTES.
1. NUMBERS IN PARENTHESES INDICATE QUANTITY USED AT LOCATION.

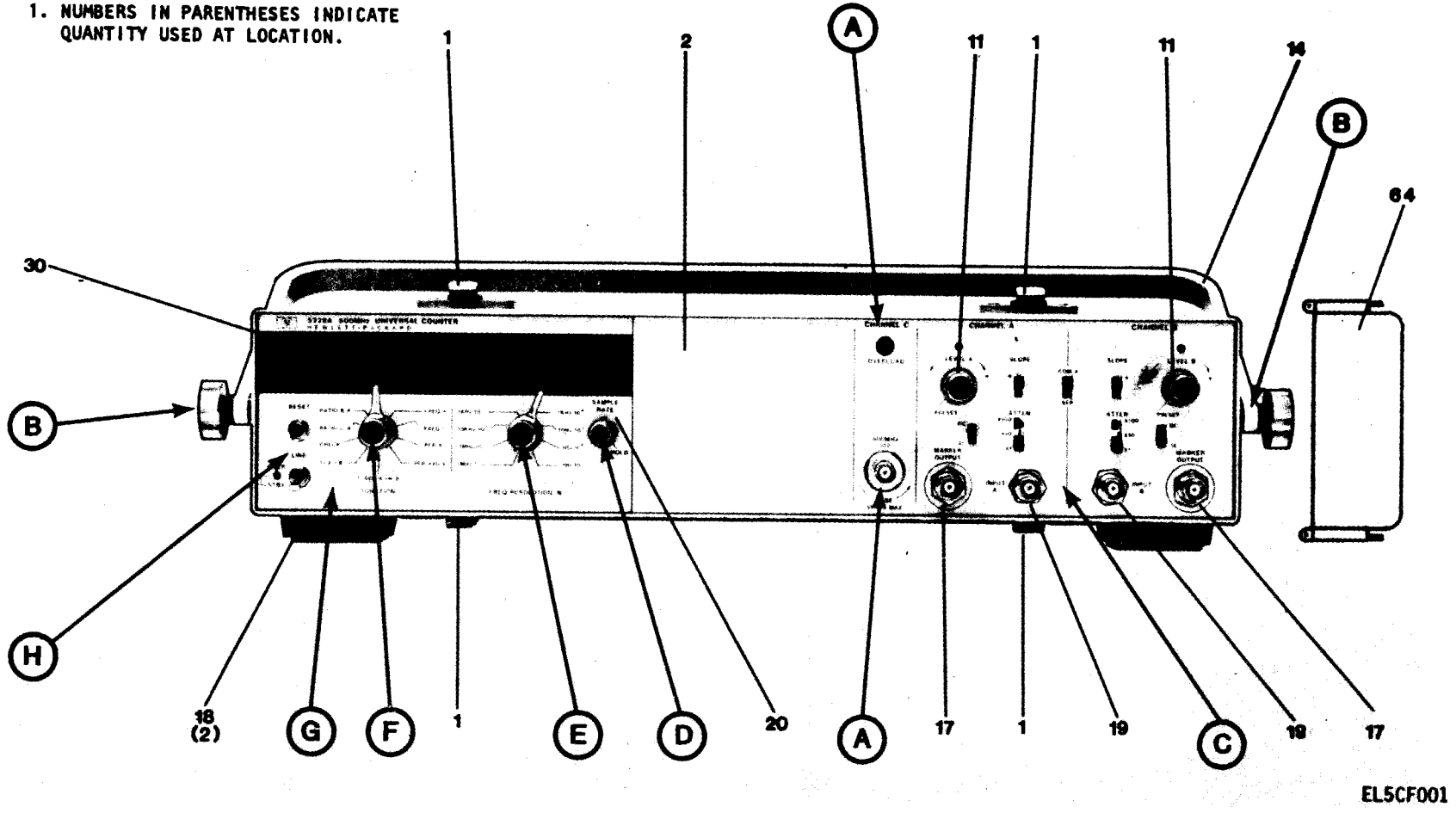

Figure 1. Electronic Counter AN/USM-459 (Sheet 1 of 10).

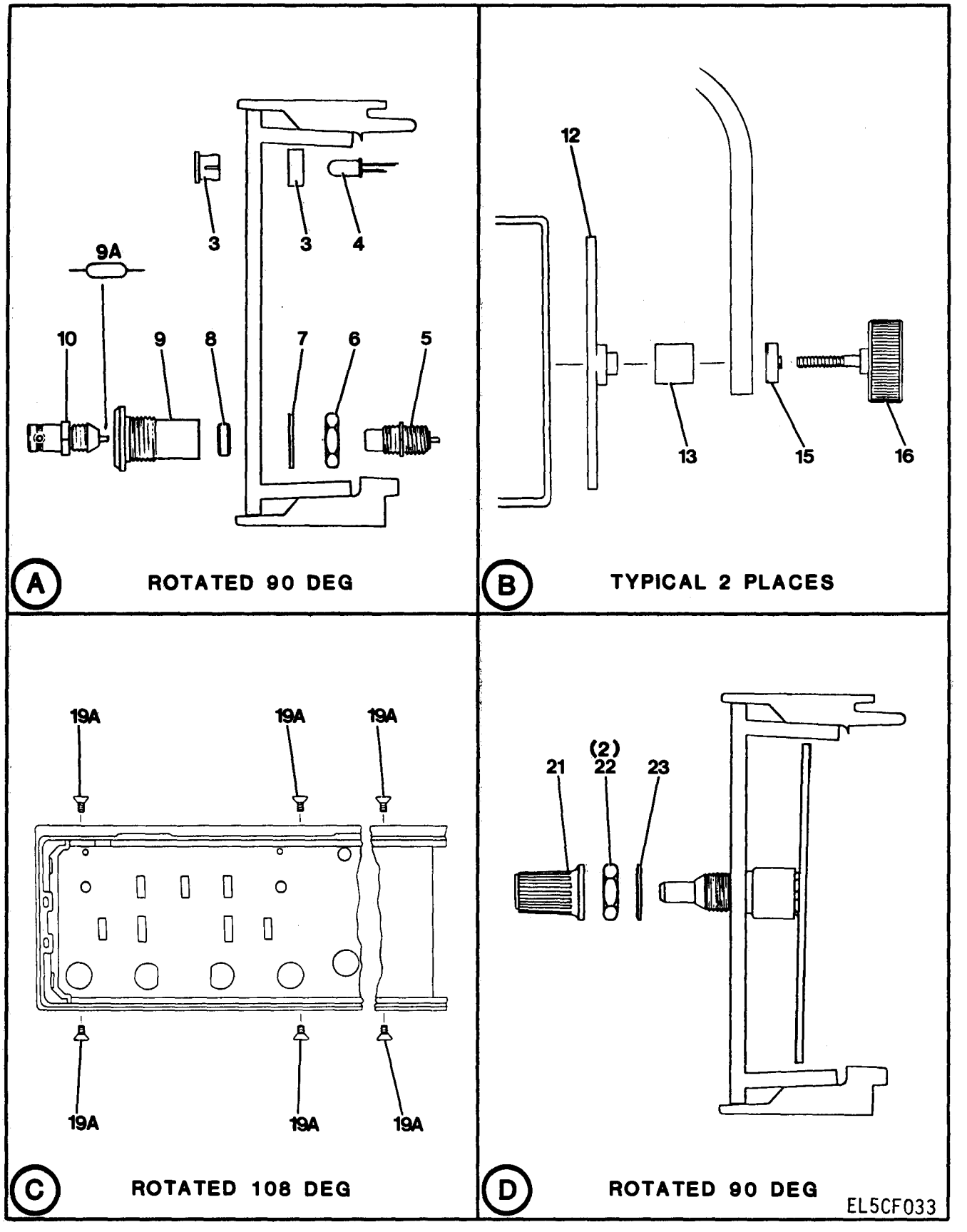

Figure 1. Electronic Counter AN/USM-459 (Sheet 2 of 10).

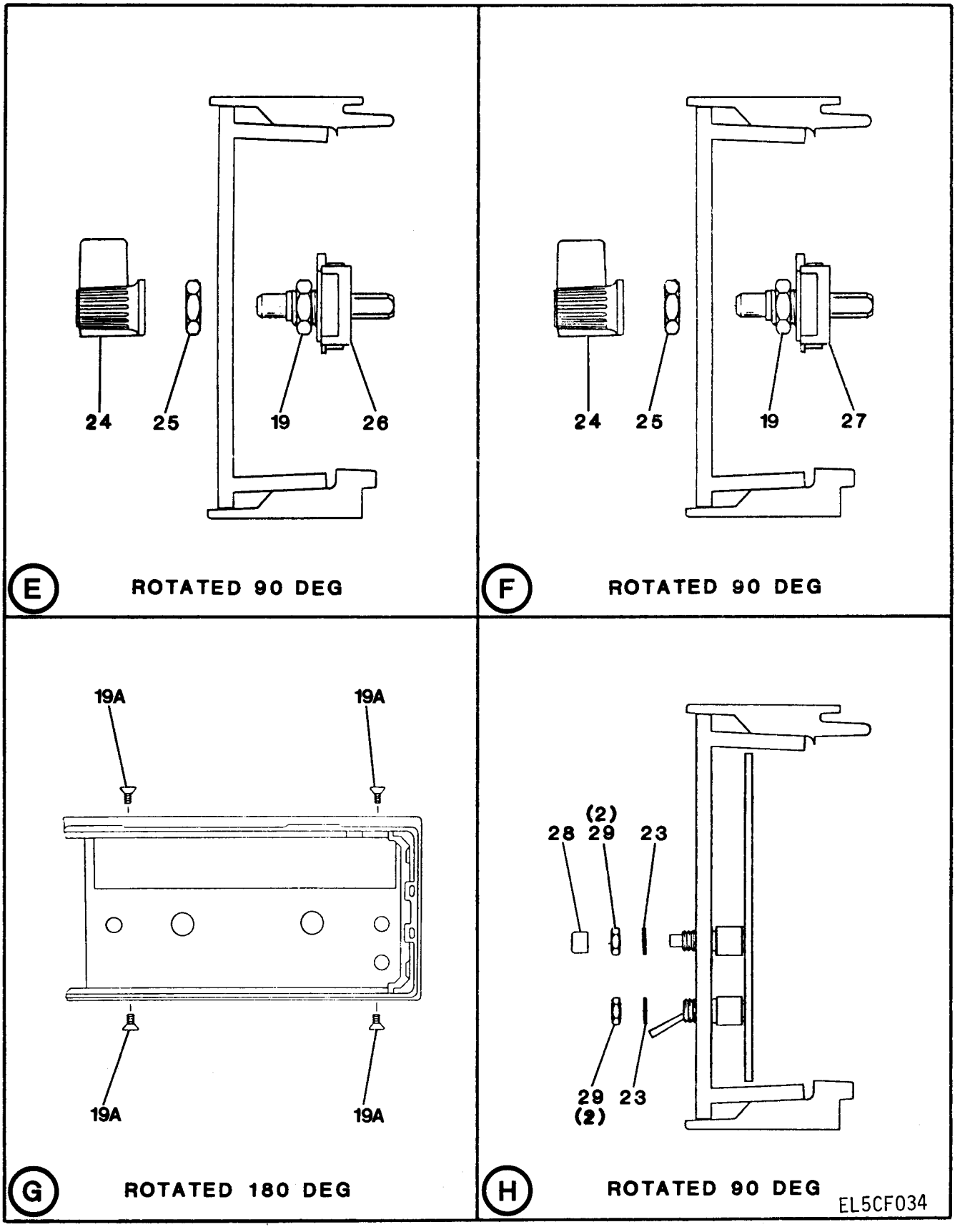

Figure 1. Electronic Counter AN/USM-459 (Sheet 3 of 10).

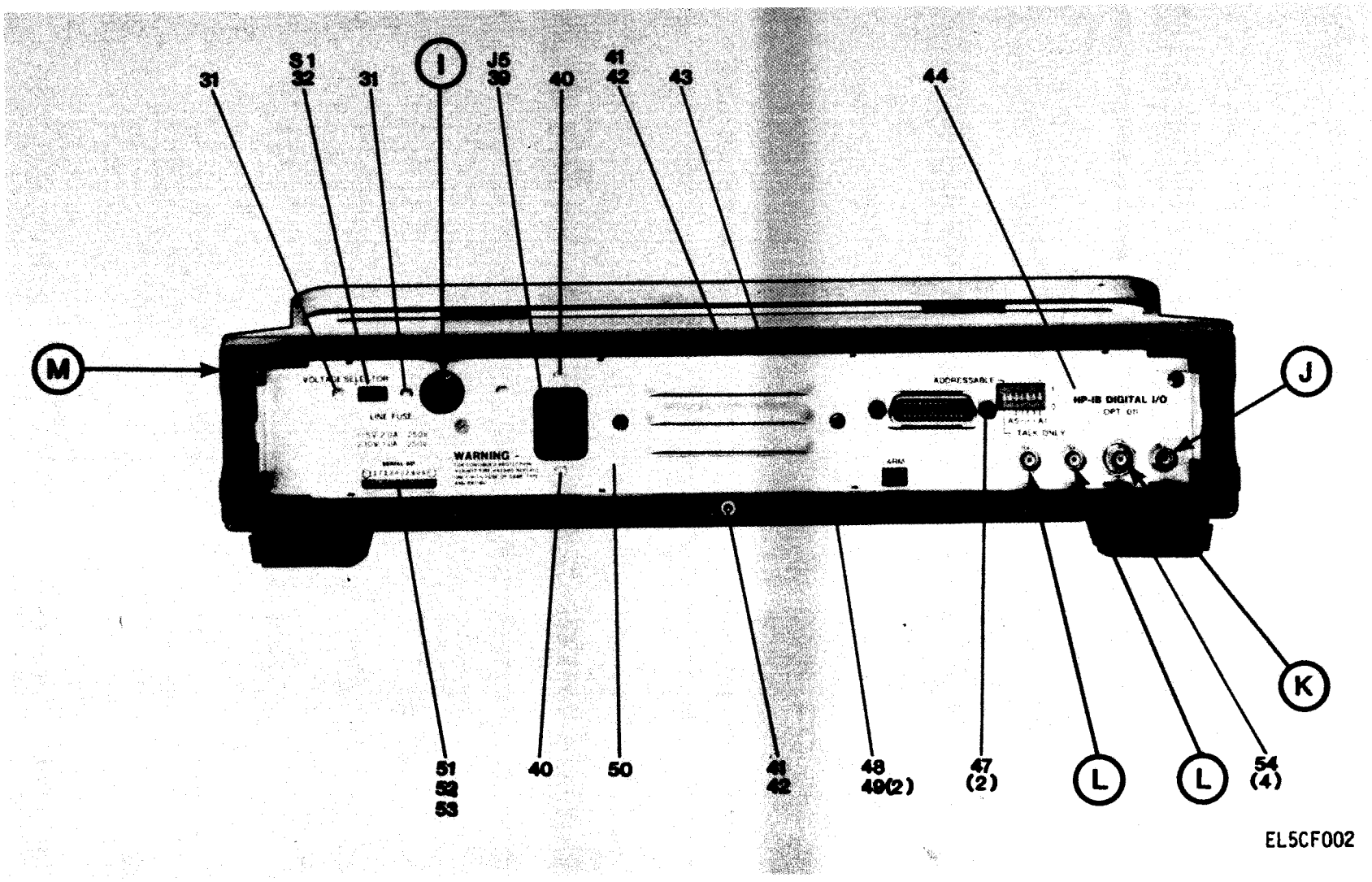

Figure 1. Electronic Counter AN/USM-459 (Sheet 4 of 10).

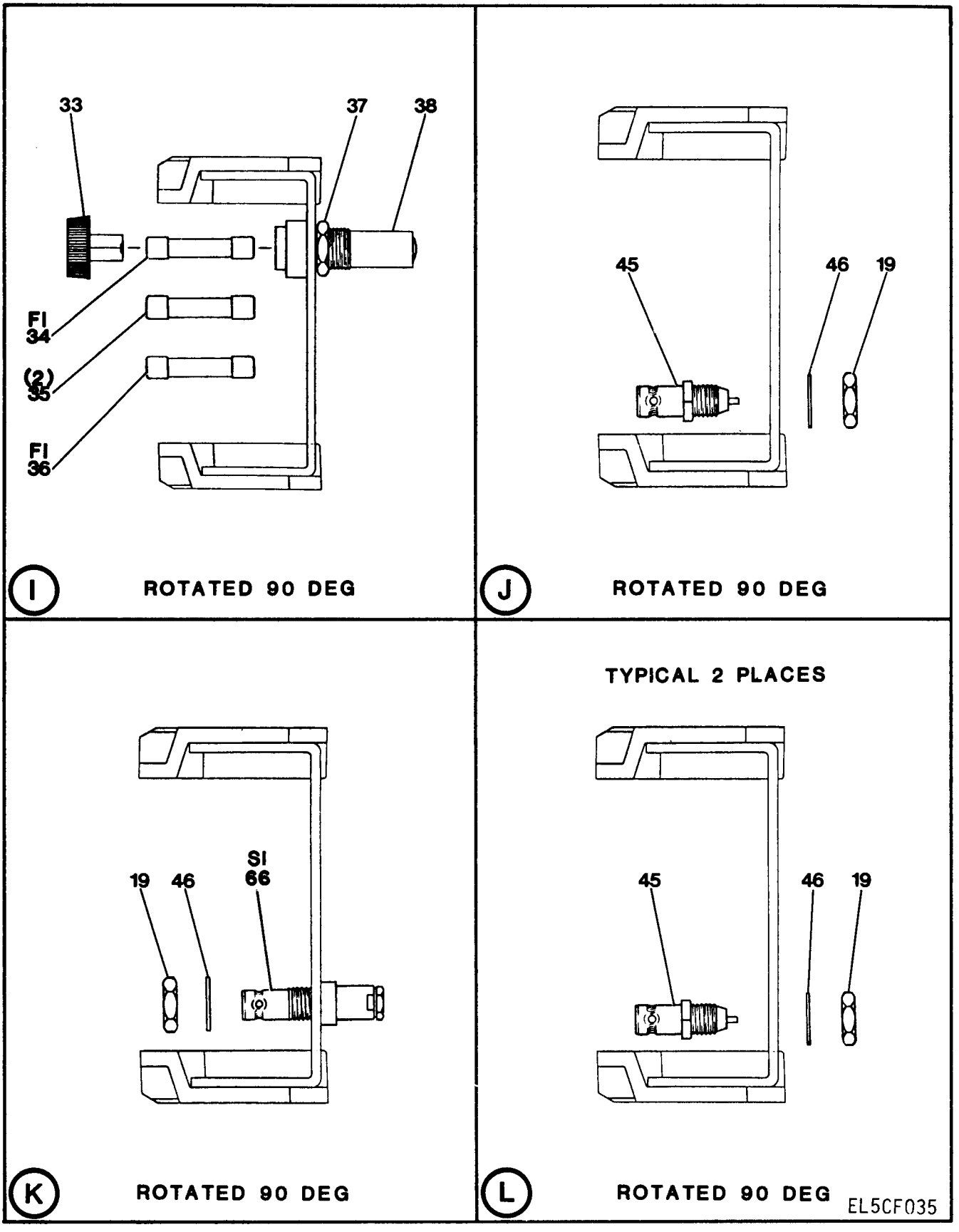

Figure 1. Electronic Counter AN/USM-459 (Sheet 5 of 10).

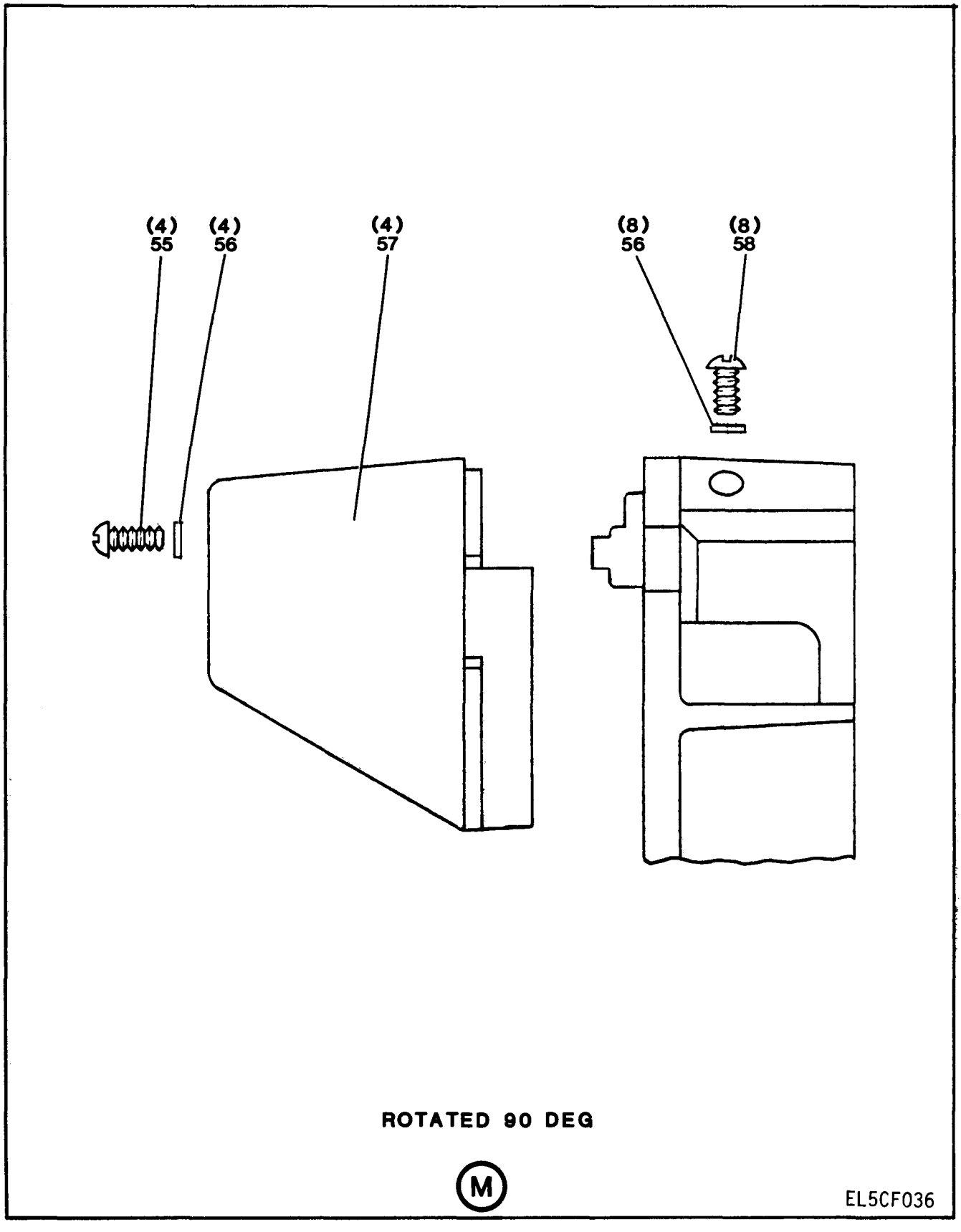

Figure 1. Electronic Counter AN/USM-459 (Sheet 6 of 10).

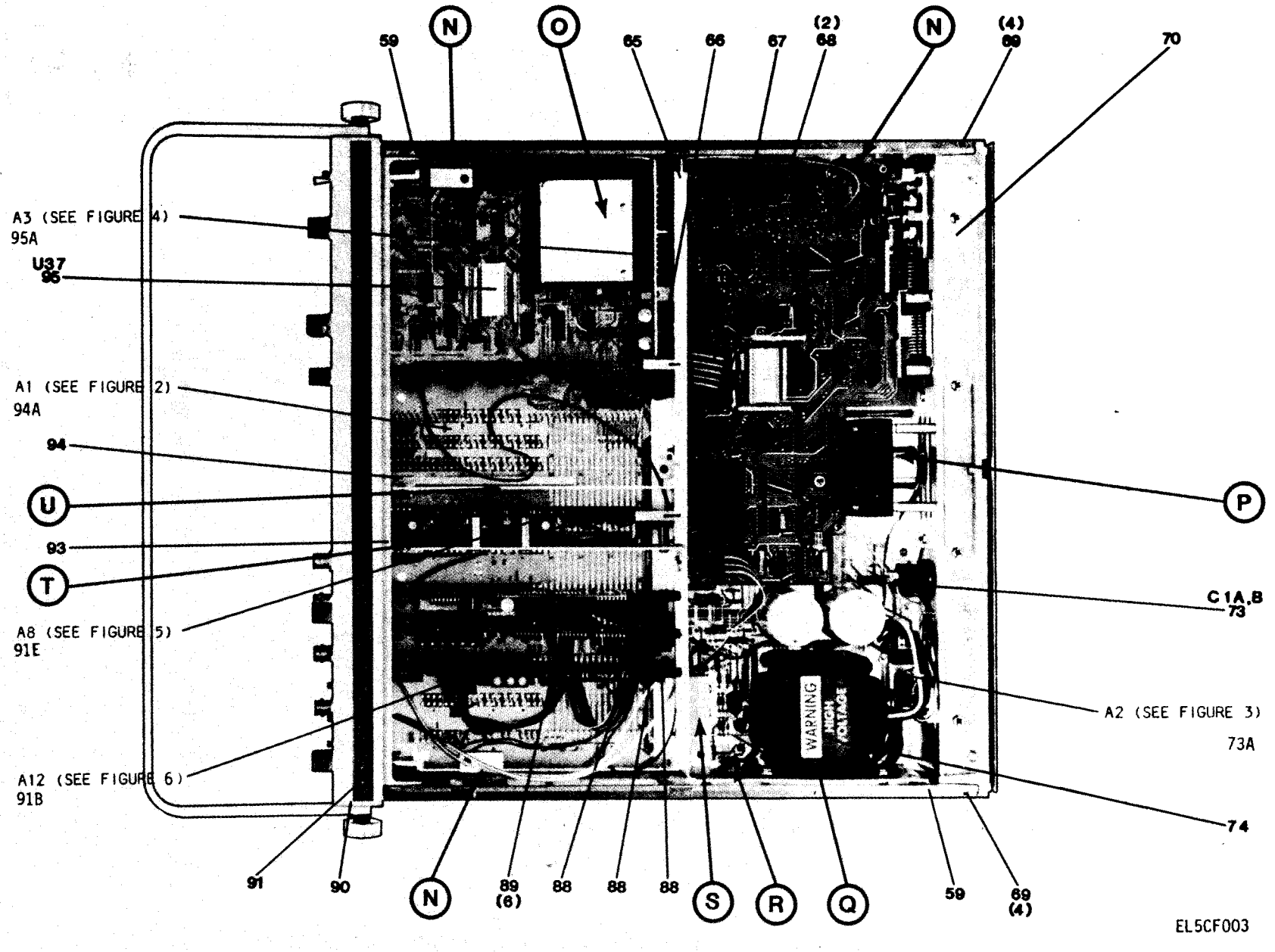

Figure 1. Electronic Counter AN/USM-459 (Sheet 7 of 10).

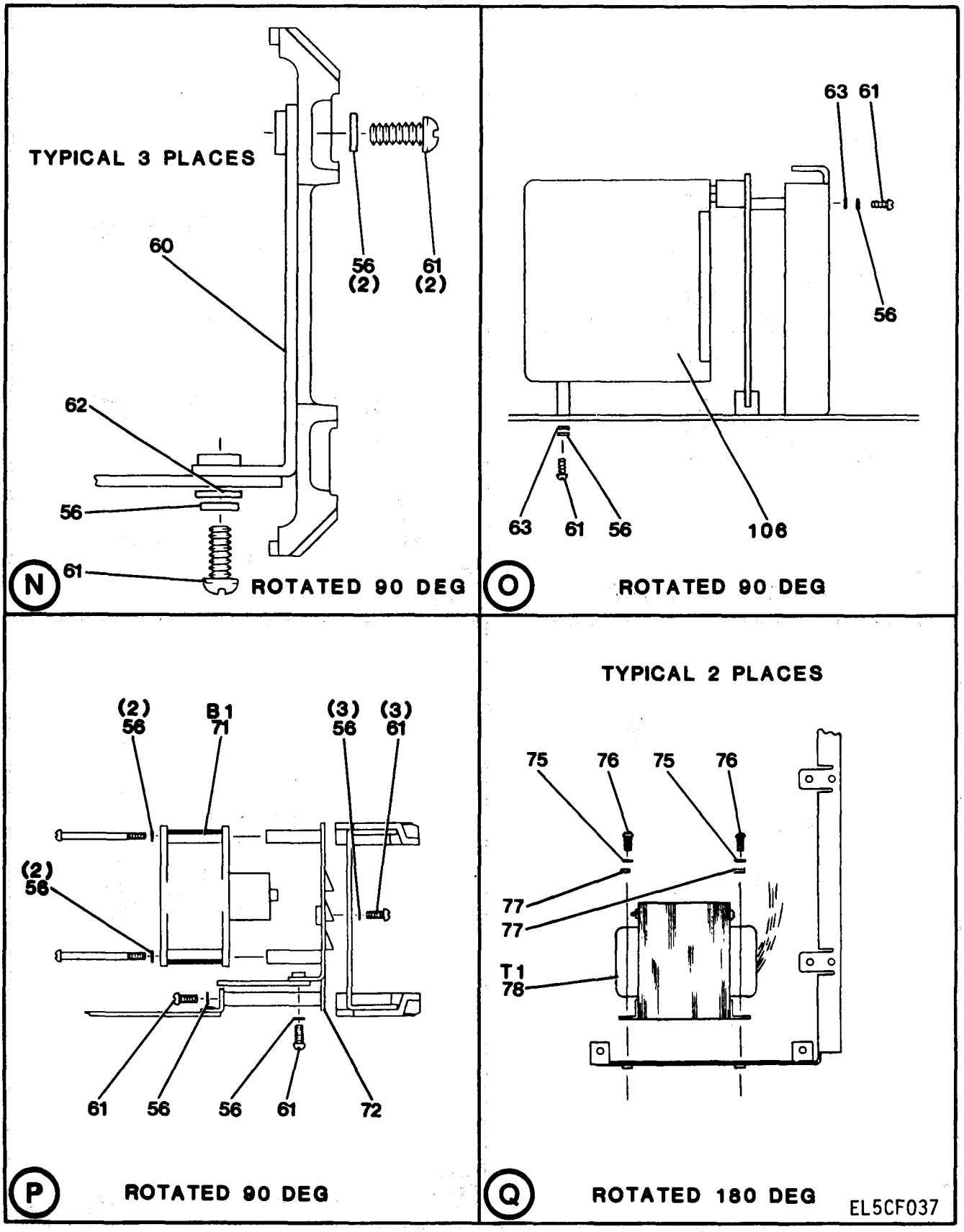

Figure 1. Electronic Counter AN/USM-459 (Sheet 8 of 10).

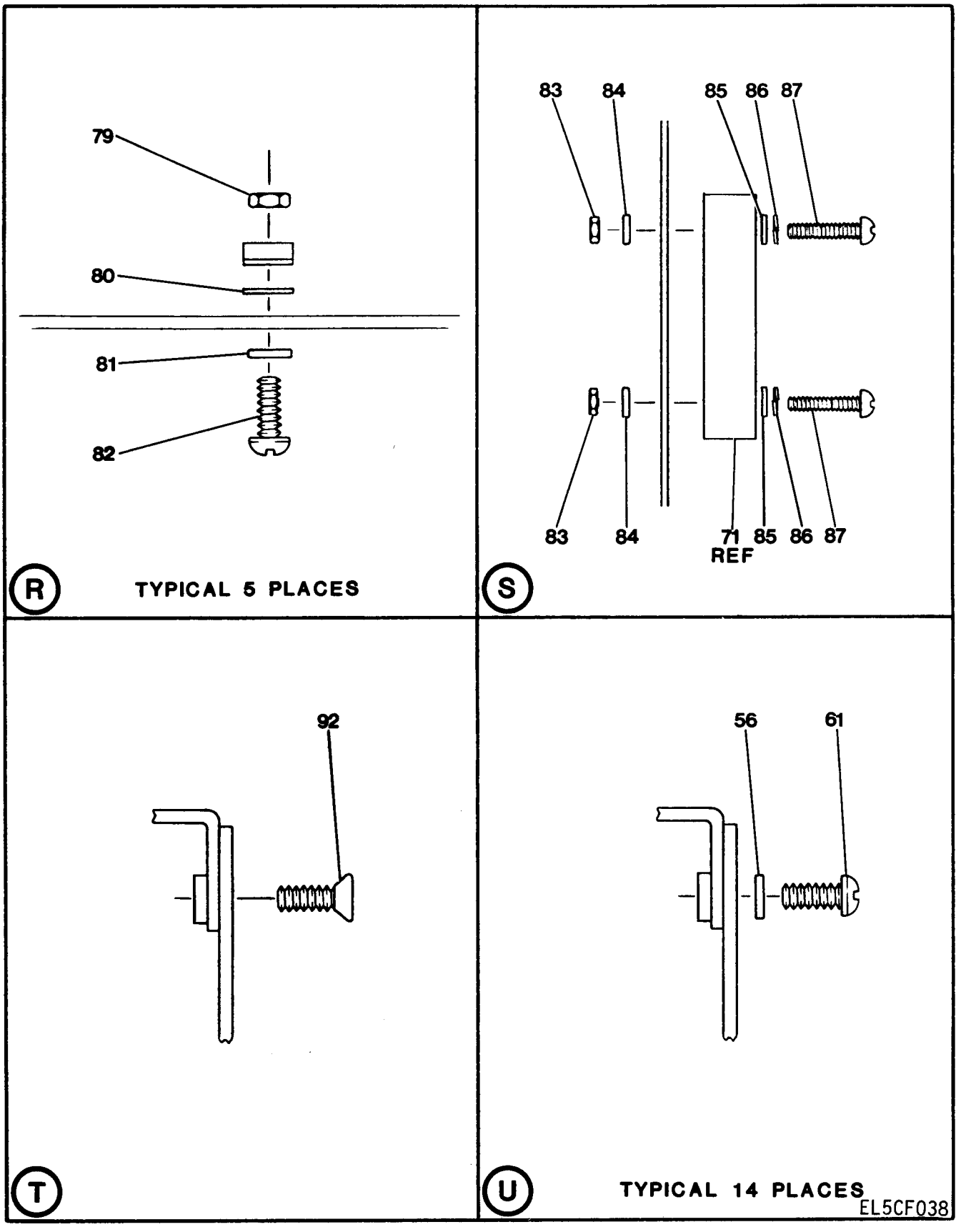

Figure 1. Electronic Counter AN/USM-459 (Sheet 9 of 10).

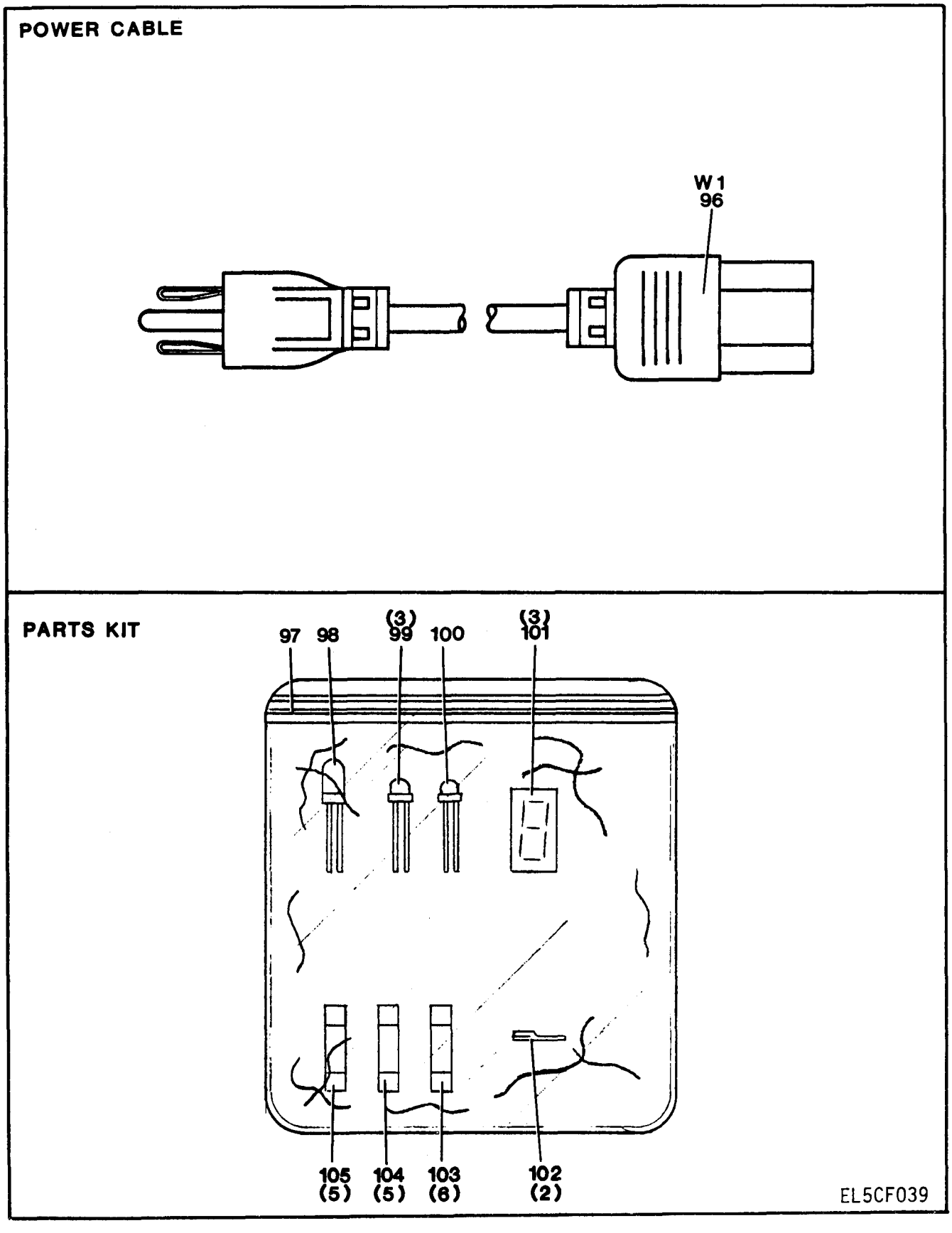

Figure 1. Electronic Counter AN/USM-459 (Sheet 10 of 10).

(1) ITEM NO	(2) SMR CODE	(3) FSCM	(4) PART NUMBER	(5) DESCRIPTION AND USABLE ON CODE (UOC)	(6) QTY
				GROUP 00 ELECTRONIC COUNTER AN/USM-459 AND GROUP 01 ELECTRONIC COUNTER TS-3662/U	
				FIG 1	
1	PAHZZ	28480	1390-0406	CATCH,CLAMPING	4
2	XBDZZ	28480	05328-20217	PANEL,FRONT	1
3	PAHZZ	50434	1400-0560	CLIP AND RETAINER USED ON SERIAL NO 1828A00001 THROUGH 1908A99999	1
4	PAOZZ	28480	50824655	LIGHT EMITTING DIOD USED ON SERIAL NO 1828A00001 THROUGH 1908A99999	1
5	PAHZZ	28480	G5305-60206	CONNECTOR,RECEPTACL	1
6	PAHZZ	28480	0590-0038	NUT,PLAIN,HEXAGON USED ON SERIAL NO 1828A00001 THROUGH 1908A99999	1
7	PAHZZ	78189	1924-02	WASHER,LOCK USED ON SERIAL NO 1828A00001 THROUGH 1908A99999	1
8	PAHZZ	28480	05305-20105	INSULATOR,BUSHING	1
9	PAHZZ	28480	05305-20104	FUSEHOLDER,EXTRACTO	1
9A	PAOZZ	81349	FM04A125V 1/8A	FUSE,CARTRIDGE	1
10	PAHZZ	28480	05305-60205	CONNECTOR,RECEPTACL	1
11	PAOZZ	28480	0370-1097	KNOB	2
12	PAHZZ	28480	5040-7224	ADAPTER,HANDLE	2
13	PAHZZ	28480	0380-0004	SPACER,SLEEVE USED ON SERIAL NO 1828A00001 THROUGH 1908A99999	2
14	PAHZZ	28480	05328-00020	HANDLE,BAIL	1
15	PAHZZ	28480	5040-7216	BUSHING,SLEEVE	2
16	PAHZZ	28480	05328-20253	THUMBSCREW	2
17	PAHZZ	53655	11-341LN	NUT,PLAIN,HEXAGON USED ON SERIAL NO 1828A00001 THROUGH 1908A99999	2
18	PAHZZ	28480		CLIP,RETAINING	2
19	PAHZZ	73743		NUT,PLAIN,HEXAGON	10
19A	PAHZZ	96906	MS51959-25	SCREW,MACHINE	50
20	XBHZZ	28480	05328-20212	PANEL,FRONT	1
21	PAOZZ	28480	0370-1005	KNOB	1
22	PAHZZ	82389	410C507	NUT,PLAIN,HEXAGON	2
23	PAHZZ	28480	3050-0273	SHIM USED ON SERIAL NO 1828A00001 THROUGH 1908A99999	3
24	PAOZZ	28480	0370-1107	KNOB USED ON SERIAL NO 1828A00001 THROUGH 1908A99999	2
25	XBHZZ	28480	2950-0154	NUT,PLAIN,HEX USED ON SERIAL NO 1828A00001 THROUGH 1908A99999	2
26	PAHZZ	28480	3130-0500	SWITCH,ROTARY	1
27	PAHZZ	28480	3130-0498	SWITCH,ROTARY	1
28	PAHZZ	28480	3101-0851	PUSH BUTTON	1
29	XBHZZ	57057	1589900009	NUT,PLAIN,HEXAGON	4
30	XBHZZ	28480	4040-1214	LENS,DISPLAY	1
31	PAHZZ	96906	MS16535-154	RIVET,TUBULAR USED ON SERIAL NO 1828A00001 THROUGH 1908A99999	2
32	PAHZZ	82389	11A1242A	SWITCH,SLIDE	1

(1) ITEM NO	(2) SMR CODE	(3) FSCM	(4) PART NUMBER	(5) DESCRIPTION AND USABLE ON CODE (UOC)	(6) QTY
33	PAHZZ	75915	345001-020	FUSEHOLDER SUBASSEM	1
34	PAOZZ	81349	F02A250V2A	FUSE,CARTRIDGE	1
35	PAOZZ	75915	275-125	FUSE,CARTRIDGE USED ON SERIAL NO 1828A00001 THROUGH 1908A99999	2
36	PAOZZ	81349	F02A250V1A	FUSE,CARTRIDGE USED ON SERIAL NO 1828A00001 THROUGH 1908A99999	1
37	PAHZZ	75915	903-070	NUT	1
38	PAHZZ	28480	2110-0464	FUSEHOLDER,EXTRACTO	1
39	PAHZZ	16428	17252	CONNECTOR,RECEPTACL	1
40	PAHZZ	96906	MS16535-156	RIVET,TUBULAR USED ON SERIAL NO 1828A00001 THROUGH 1908A99999	2
41	PAHZZ	28480	0570-1171	SCREW,MACHINE USED ON SERIAL NO 1828A00001 THROUGH 1908A99999	2
42	XBHZZ	79136	5133-14SMDR	RING,RETAINING USED ON SERIAL NO 1828A00001 THROUGH 1908A99999	2
43	XBHZZ	28480	05328-00021	COVER,TOP	1
44	XBHZZ	28480	05328-00014	COVER,ACCESS	1
45	PAHZZ	81349	M39012/21-0002	CONNECTOR,RECEPTACL	3
46	PAHZZ	78189	1920-02	WASHER,LOCK	4
47	XAHZZ	28480	0380-0643	POST,ELECTRICAL-MEC	2
48	XBHZZ	28480	05328-00022	COVER,BOTTOM	1
49	XBHZZ	28480	05328-00015	INSULATOR,PLATE	2
50	XBHZZ	28480	05328-00017	PANEL,REAR	1
51	XBHZZ	28480	7122-0097	PLATE,IDENT	1
52	XBHZZ	28480	7120-6470	PLATE,IDENT USED ON SERIAL NO 1828A00001 THROUGH 1908A99999	1
53	XBHZZ	28480	7120-7018	PLATE,IDENT USED ON SERIAL NO 1828A00001 THROUGH 1908A99999	1
54	PAHZZ	28480	5040-7201	BUMPER,PLASTIC	4
55	PAHZZ	96906	MS24693C25	SCREW,MACHINE	4
56	PAHZZ	96906	MS35335-58	WASHER,LOCK	30
57	PAHZZ	28480	5040-7221	BUMPER,PLASTIC	4
58	PAHZZ	96906	MS51957-26	SCREW,MACHINE	8
59	XBHZZ	28480	5020-8831	STRUT,SIDE	2
60	XBHZZ	28480	05328-00002	BRACKET,ANGLE	3
61	PAHZZ	96906	MS51957-27	SCREW,MACHINE	3
62	XAHZZ	83330	2162-6	WASHER,FLAT USED ON SERIAL NO 1828A00001 THROUGH 1908A99999	7
63	XBHZZ	28480	3050-0245	WASHER,FLAT USED ON SERIAL NO 1828A00001 THROUGH 1908A99999	2
64	PAHZZ	28480	7101-0470	COVER	1
65	XBHZZ	28480	05328-00001	BRACKET,MAIN	1
66	PAHZZ	28480	05328-60115	CABLE ASSEMBLY,RADI	1
67	PAHZZ	28480	8120-2176	CABLE ASSEMBLY,SPEC	1
68	PAHZZ	00779	42718-3	TERMINAL,QUICK DISC USED ON SERIAL NO 1828A00001 THROUGH 1908A99999	2
69	PAHZZ	96906	MS51959-41	SCREW,MACHINE	8
70	XBHZZ	28480	5020-8802	FRAME,REAR	1
70A	PAHZZ	28480	05328-60043	CIRCUIT CARD ASSEMB USED ON SERIAL NO 1828A00001 THROUGH 1908A99999	1
71	PAHZZ	09410	69.11.2	CONTROLLER,MOTOR	1
72	XBHZZ	28480	05328-00019	BRACKET,FAN	1

(1) ITEM NO	(2) SMR CODE	(3) FSCM	(4) PART NUMBER	(5) DESCRIPTION AND USABLE ON CODE (UOC)	(6) QTY
73	PAHZZ	28480	0160-0676	CAPACITOR,FIXED,CER USED ON SERIAL NO 1828A00001 THROUGH 1908A99999	1
73A	PAHDD	28480	05328-60035	CIRCUIT CARD ASSEMB	1
74	XBHZZ	28480	7120-0644	PLATE,INSTR	1
75	PAHZZ	96906	MS35338-41	WASHER,LOCK	4
76	PAHZZ	96906	MS51959-28	SCREW,MACHINE	4
77	PAHZZ	96906	MS15795-806	WASHER,FLAT	4
78	PAHZZ	28480	9100-3046	TRANSFORMER,POWER USED ON SERIAL NO 1828A00001 THROUGH 1908A99999	1
79	XBHZZ	28480	2420-0020	NUT,PLAIN,HEX	5
80	PAHZZ	28480	0340-0765	INSULATOR	5
81	PAHZZ	96906	MS35336-9	WASHER,LOCK	5
82	PAHZZ	85480	N632-3-8	SCREW,MACHINE	5
83	PAHZZ	96906	MS35649-244	NUT,PLAIN,HEXAGON	2
84	PAHZZ	96906	MS35335-57	WASHER,LOCK	2
85	PAHZZ	96906	MS27183-3	WASHER,FLAT	2
86	PAHZZ	96906	MS35338-40	WASHER,LOCK	2
87	PAHZZ	96906	MS51957-20	SCREW,MACHINE	2
88	PAHZZ	28480	8120-0520	CABLE ASSEMBLY,SPEC	3
89	PAHZZ	52072	CA14-200DL	RETAINER,ELECTRICAL	6
90	XBHZZ	28480	5020-8801	FRAME,FRONT	1
91	PAHZZ	28480	5040-7202	TRIM TOP	1
91A	PAHZZ	28480	05328-60030	CIRCUIT CARD ASSEMB	1
91B	PAHDD	28480	05328-60042	CIRCUIT CARD ASSEMB	1
91C	PAHZZ	28480	05328-60023	CIRCUIT CARD ASSEMB	1
91D	PAHZZ	28480	05328-60020	CIRCUIT CARD ASSEMB	1
91E	PAHDD	28480	05328-60032	CIRCUIT CARD ASSEMB USED ON SERIAL NO 1828A00001 THROUGH 1908A99999 HP P/N 05328-60032 IS FOR FIRST BUY. HP P/N 05328-60045 IS FOR SECOND BUY	1
92	PAHZZ	96906	MS24693C26	SCREW,MACHINE USED ON SERIAL NO 1828A00001 THROUGH 1908A99999	1
93	XBHZZ	28480	05328-00011	PLATE,ELEC SHLD USED ON SERIAL NO 1828A00001 THROUGH 1908A99999	1
94	XBHZZ	28480	05328-00003	BRACKET,FRONT USED ON SERIAL NO 1828A00001 THROUGH 1908A99999	1
94A	PAHDD	28480	05328-60028	CIRCUIT CARD ASSEMB	1
94B	PAHZZ	28480	05328-60005	CIRCUIT CARD ASSEMB	1
95	PAHZZ	28480	1818-2251	MICROCIRCUIT,DIGITA	1
95A	PAHDD	28480	05328-60038	CIRCUIT CARD ASSEMB HP P/N 05328-60038 IS FOR NEW BUY. P/N 10544A FOR OLD BUY. HP P/N 05328-60038 IS FOR SECOND BUY. HP P/N 10544A IS FOR FIRST BUY	8
95B	PAHZZ	28480	05328-60026	CIRCUIT CARD ASSEMB	1
96	PAHZZ	16428	17743	CABLE ASSEMBLY,POWE	1
97	XBHDD	28480	05328-60121	PARTS KIT,CTR	1
98	PAOZZ	28480	1450-0569	LIGHT EMITTING DIOD	1
99	PAOZZ	28480	1990-0404	LIGHT EMITTING DIOD	3
100	PAOZZ	28480	1990-0485	LIGHT EMITTING DIOD	1

(1) ITEM NO	(2) SMR CODE	(3) FSCM	(4) PART NUMBER	(5) DESCRIPTION AND USABLE ON CODE (UOC)	(6) QTY
101	PAHZZ	28480	1990-0437	SEMICONDUCTOR DEVIC	3
102	PAHOZZ	00779	42718-3	TERMINAL,QUICK DISC USED ON SERIAL NO 1828A00001 THROUGH 1908A99999	2
103	PAOZZ	81349	F02A250V1A	FUSE,CARTRIDGE USED ON SERIAL NO 1828A00001 THROUGH 1908A99999	6
104	PAOZZ	81349	F02A250V2A	FUSE,CARTRIDGE	5
105	PAOZZ	75915	275-125	FUSE,CARTRIDGE	5
106	PAHZZ	74306	2810007	OSCILLATOR,CRYSTAL HP P/N 10544A WAS FOR OLD BUY. P/N 05328-60038 FOR NEW BUY. HP P/N 10544A IS FOR FIRST BUY. HP P/N 05328-60038 IS FOR SECOND BUY	1

END OF FIGURE

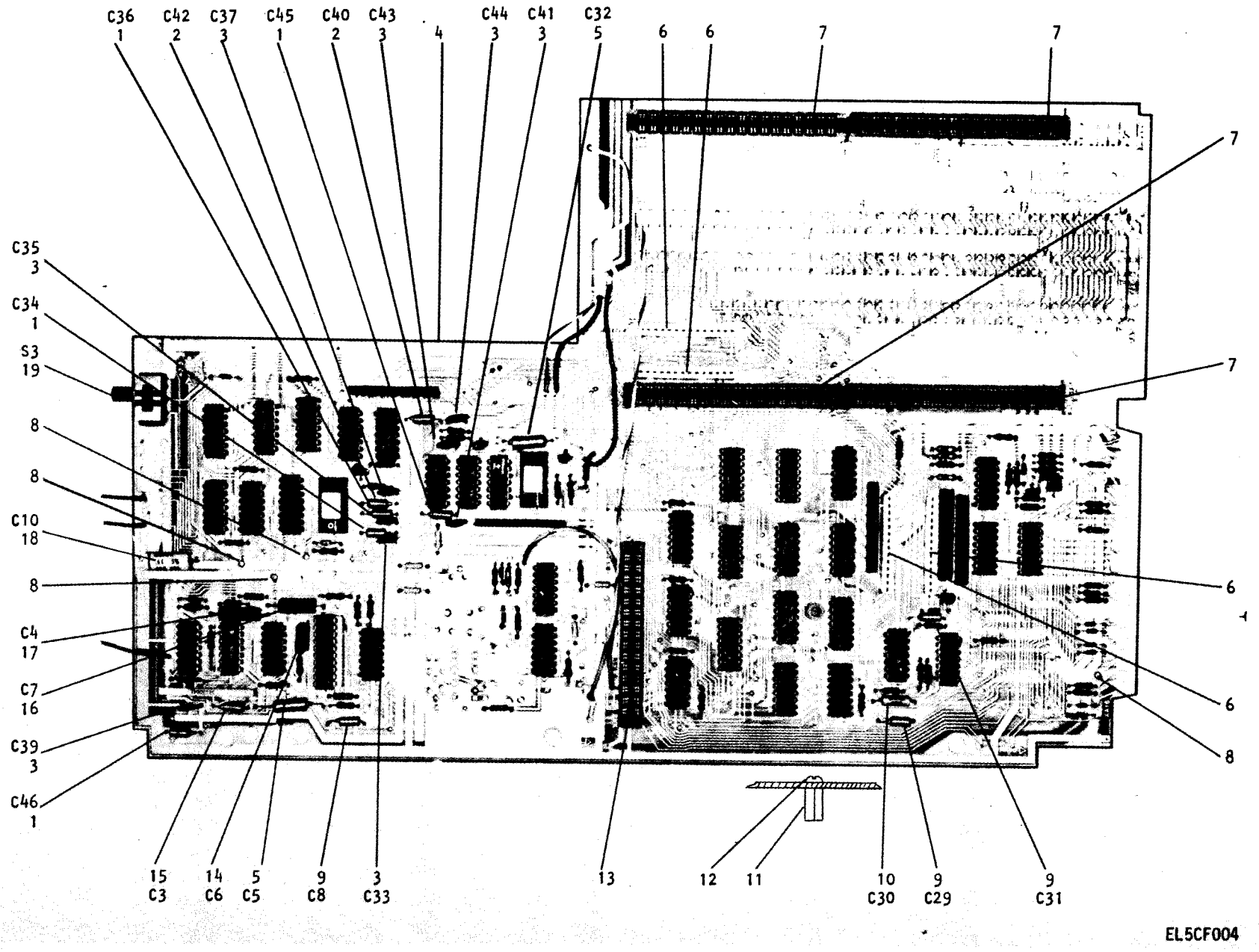

Figure 2. A1 Circuit Card Assembly (Sheet 1 of 4).

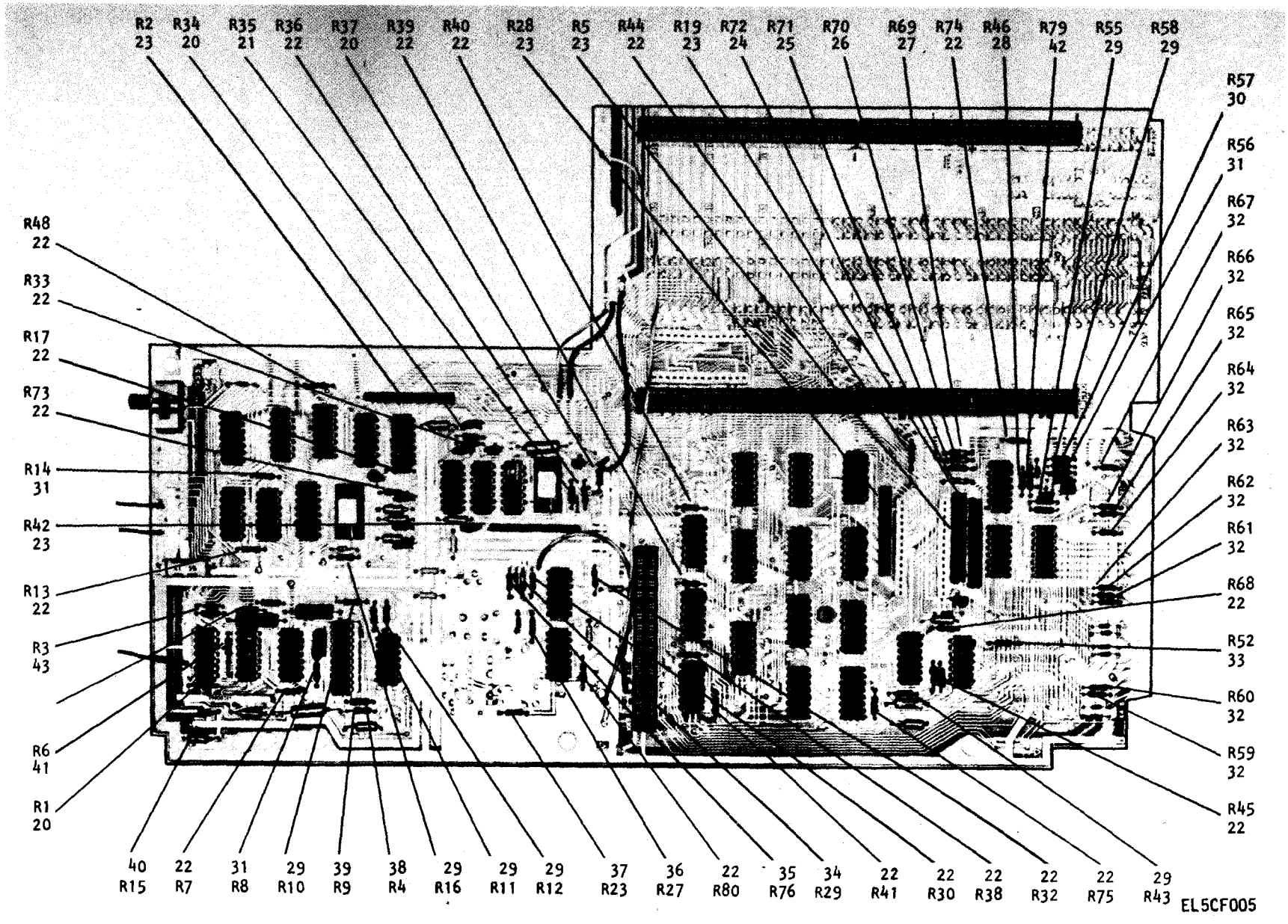

Figure 2. A1 Circuit Card Assembly (Sheet 2 of 4).

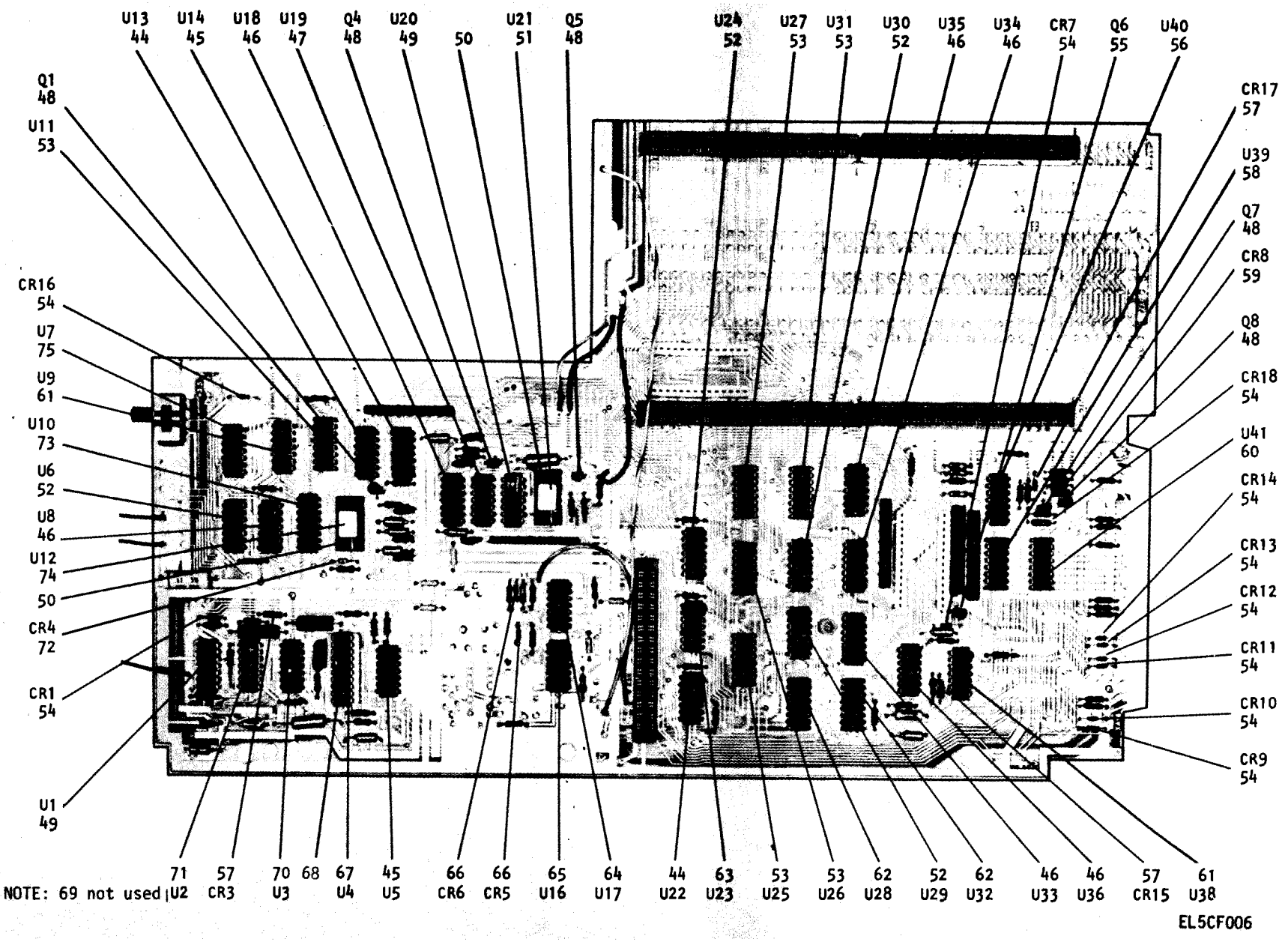

Figure 2. A1 Circuit Card Assembly (Sheet 3 of 4).

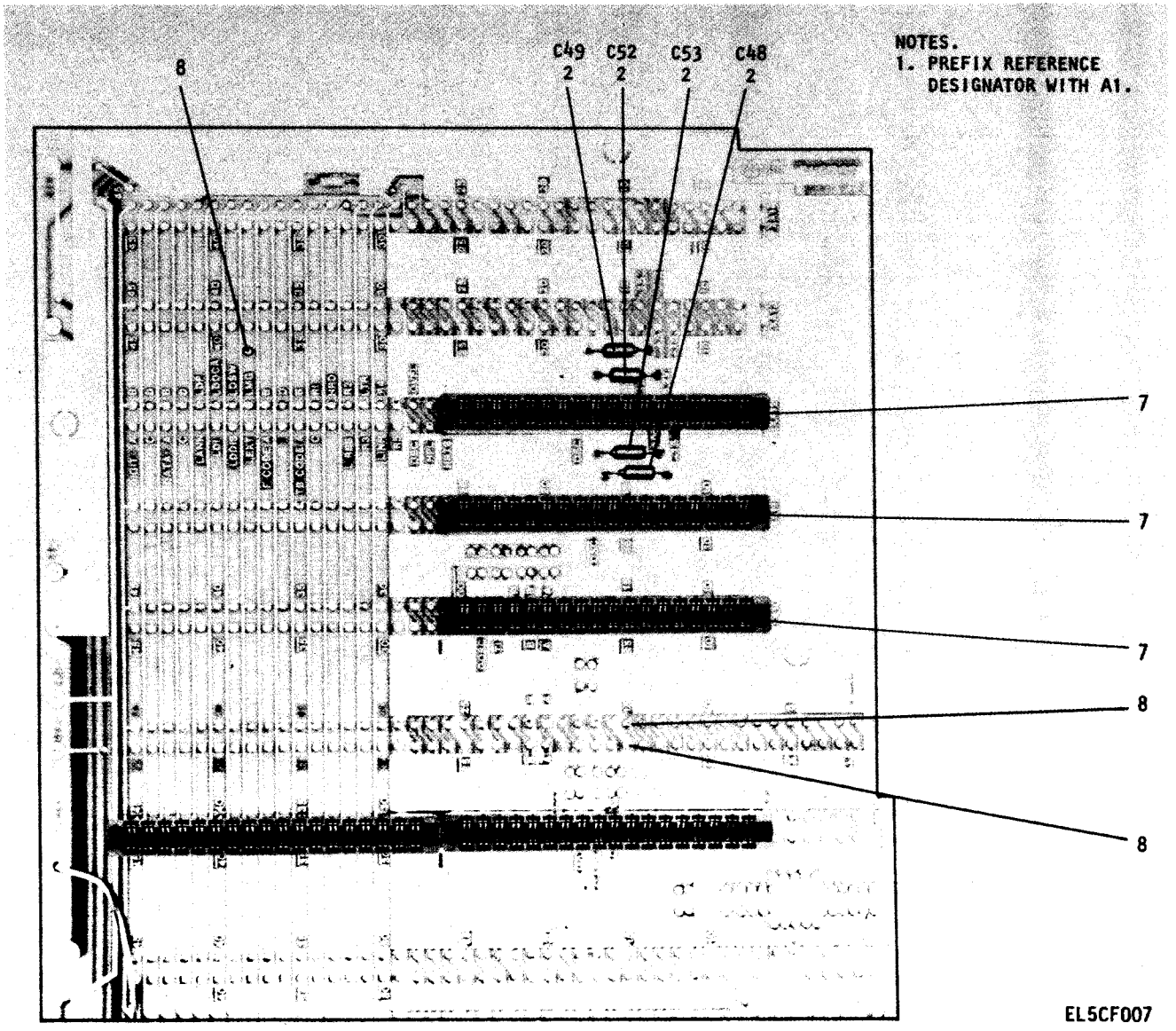

Figure 2. A1 Circuit Card Assembly (Sheet 4 of 4).

(1) ITEM NO	(2) SMR CODE	(3) FSCM	(4) PART NUMBER	(5) DESCRIPTION AND USABLE ON CODE (UOC)	(6) QTY
				GROUP 0101 CIRCUIT CARD ASSEMBLY A1 (MOTHERBOARD)	
				FIG 2	
1	PADZZ	81349	M39003/01-2988	CAPACITOR,FIXED,ELE	4
2	PADZZ	81349	M39003/01-3003	CAPACITOR,FIXED,ELE USED ON SERIAL NO 1828A00001 THROUGH 1908A99999	6
3	PADZZ	60705	C023B501G103M	CAPACITOR,FIXED,CER	7
4	XADZZ	28480	05328-20001	PRINTED WIRG BD	1
5	PADZZ	81349	M39003/01-3026	CAPACITOR,FIXED,ELE USED ON SERIAL NO 1828A00001 THROUGH 1908A99999	2
6	PADZZ	28480	1200-0549	SOCKET,PLUG-IN ELEC	4
7	PADZZ	28480	1251-2026	CONNECTOR,RECEPTACL	7
8	PADZZ	28480	0360-0124	TERMINAL,STUD USED ON SERIAL NO 1828A00001 THROUGH 1908A99999	7
9	PADZZ	81349	M39003/01-3076	CAPACITOR,FIXED,ELE USED ON SERIAL NO 1828A00001 THROUGH 1908A99999	3
10	PADZZ	56289	292P10292	CAPACITOR,FIXED,PLA	1
11	PADZZ	06540	8156N0632	NUT,PLAIN,ROUND	1
12	PADZZ	85480	N632-3-8	SCREW,MACHINE	1
13	PADZZ	71785	252-15-30-300	CONNECTOR,RECEPTACL	1
14	PADZZ	28480	0140-0177	CAPACITOR,FIXED,MIC	1
15	PADZZ	81349	M39003/01-3064	CAPACITOR,FIXED,ELE USED ON SERIAL NO 1828A00001 THROUGH 1908A99999	1
16	PADZZ	56289	292P22352	CAPACITOR,FIXED,PLA	1
17	PADZZ	56289	292P10352	CAPACITOR,FIXED,PLA	1
18	PADZZ	18876	10395420-002	CAPAICTOR,FIXED,PLA	1
19	XBDZZ	28480	3101-1977	SWITCH,SLIDE	1
20	PADZZ	81349	RCR07G271JS	RESISTOR,FIXED,COMP USED ON SERIAL NO 1828A00001 THROUGH 1908A99999	3
21	PADZZ	81349	RCR07G511JS	RESISTOR,FIXED,COMP	1
22	PADZZ	16845	1000-483-23	RESISTOR,FIXED	19
23	PADZZ	28480	1810-0055	RESISTOR NETWORK,FI	5
24	PADZZ	81349	RNC55K2001FS	RESISTOR,FIXED,FILM USED ON SERIAL NO 1828A00001 THROUGH 1908A99999	1
25	PADZZ	81349	RNC55K3161FS	RESISTOR,FIXED,FILM	1
26	PADZZ	81349	RNC55K1212FS	RESISTOR,FIXED,FILM USED ON SERIAL NO 1828A00001 THROUGH 1908A99999	1
27	PADZZ	81349	RNC55K3011FS	RESISTOR,FIXED,FILM USED ON SERIAL NO 1828A00001 THROUGH 1908A99999	1
28	PADZZ	81349	RCR07G154JS	RESISTOR,FIXED,COMP	1
29	PADZZ	81349	RCR07G102JS	RESISTOR,FIXED,COMP	7
30	PADZZ	81349	RCR07G681JS	RESISTOR,FIXED,COMP	1
31	PADZZ	81349	RCR07G472JS	RESISTOR,FIXED,COMP	3
32	PADZZ	81349	RCR07G560JS	RESISTOR,FIXED,COMP	9
33	PADZZ	81349	RCR07G563JS	RESISTOR,FIXED,COMP	1
34	PADZZ	81349	RNC60H1502FS	RESISTOR,FIXED,FILM	1
35	PADZZ	16845	1000-409-16	TRANSISTOR USED ON SERIAL NO 1828A00001 THROUGH 1908A99999	1
36	PADZZ	81349	RNC60H1501FS	RESISTOR,FIXED,FILM USED ON SERIAL	1

(1) ITEM NO	(2) SMR CODE	(3) FSCM	(4) PART NUMBER	(5) DESCRIPTION AND USABLE ON CODE (UOC)	(6) QTY
				NO 1828A00001 THROUGH 1908A99999	
37	PADZZ	81349	RCR07G201JS	RESISTOR,FIXED,COMP USED ON SERIAL	1
				NO 1828A00001 THROUGH 1908A99999	
38	PADZZ	81349	RCR07G335JS	RESISTOR,FIXED,COMP	1
39	PADZZ	81349	RCR07G152JS	RESISTOR,FIXED,COMP USED ON SERIAL	1
				NO 1828A00001 THROUGH 1908A99999	
40	PADZZ	28480	1810-0041	RESISTOR NETWORK,FI	1
41	PADZZ	81349	RCR07G331JS	RESISTOR,FIXED,COMP	1
42	PADZZ	81349	RCR07G431JS	RESISTOR,FIXED,COMP	1
43	PADZZ	81349	RCR07G272JS	RESISTOR,FIXED,COMP	1
44	PADZZ	81349	M38510/00109BCB	MICROCIRCUIT,DIGITA USED ON SERIAL	2
				NO 1828A00001 THROUGH 1908A99999	
45	PADZZ	81349	M38510/01602BCB	MICROCIRCUIT,DIGITA	2
46	PADZZ	81349	M38510/10305BEB	MICROCIRCUIT,LINEAR USED ON SERIAL	6
				NO 1828A00001 THROUGH 1908A99999	
47	PADZZ	81349	M38510/10301BGB	MICROCIRCUIT,LINEAR USED ON SERIAL	1
				NO 1828A00001 THROUGH 1908A99999	
48	PADZZ	04713	SPS5103	TRANSISTOR	5
49	PADZZ	28480	1820-0055	MICROCIRCUIT,DIGITA	2
50	PADZZ	94117	280044P11	SOCKET,PLUG-IN ELEC	2
51	PADZZ	14933	L01467	MICROCIRCUIT,DIGITA	1
52	PADZZ	81349	M38510/00701BCB	MICROCIRCUIT,DIGITA USED ON SERIAL	4
				NO 1828A00001 THROUGH 1908A99999	
53	PADZZ	81349	M38510/01501BEB	MICROCIRCUIT,DIGITA	5
54	PADZZ	80131	1N3956	SEMICONDUCTOR DEVIC	10
55	PADZZ	81349	JAN2N3563	TRANSISTOR	1
56	PADZZ	81349	M38510/00104BCB	MICROCIRCUIT,DIGITA USED ON SERIAL	1
				NO 1828A00001 THROUGH 1908A99999	
57	PADZZ	28480	1910-0016	SEMICONDUCTOR DEVIC USED ON SERIAL	3
				NO 1828A00001 THROUGH 1908A99999	
58	PADZZ	81349	M38510/01001BEB	MICROCIRCUIT,DIGITA	1
59	PADZZ	28480	1902-3082	SEMICONDUCTOR DEVIC USED ON SERIAL	1
				NO 1828A00001 THROUGH 1908A99999	
60	PADZZ	96214	531917-4	MICROCIRCUIT,DIGITA	1
61	PADZZ	81349	M38510/16101BCB	MICROCIRCUIT,DIGITA	2
62	PADZZ	81349	M38510/00402BEB	MICROCIRCUIT,DIGITA	2
63	PADZZ	81349	M38510/00401BCB	MICROCIRCUIT,DIGITA	1
64	PADZZ	81349	M38510/00103BCB	MICROCIRCUIT,DIGITA	1
65	PADZZ	81349	M38510/15101BCB	MICROCIRCUIT,DIGITA	1
66	PADZZ	28480	1901-0050	SEMICONDUCTOR DEVIC USED ON SERIAL	2
				NO 1828A00001 THROUGH 1908A99999	
67	PADZZ	14933	L01468	MICROCIRCUIT,DIGITA SELECT AT TEST	1
67	PADZZ	28480	1820-1401	MICROCIRCUIT,DIGITA SELECT AT TEST	1
68	PADZZ	28480	1200-0525	SOCKET,PLUG-IN ELEC	1
70	PADZZ	81349	M38510/00108BCB	MICROCIRCUIT,DIGITA	1
71	PADZZ	81349	M38510/15103BCB	MICROCIRCUIT,DIGITA USED ON SERIAL	1
				NO 1828A00001 THROUGH 1908A99999	
72	PADZZ	81349	JAN1N964B	SEMICONDUCTOR DEVIC	1
73	PADZZ	28480	1820-1143	MICROCIRCUIT,DIGITA	1
74	PADZZ	14933	L01466	MICROCIRCUIT,DIGITA	1
75	PADZZ	81349	M38510/01601BCB	MICROCIRCUIT,DIGITA	1

END OF FIGURE

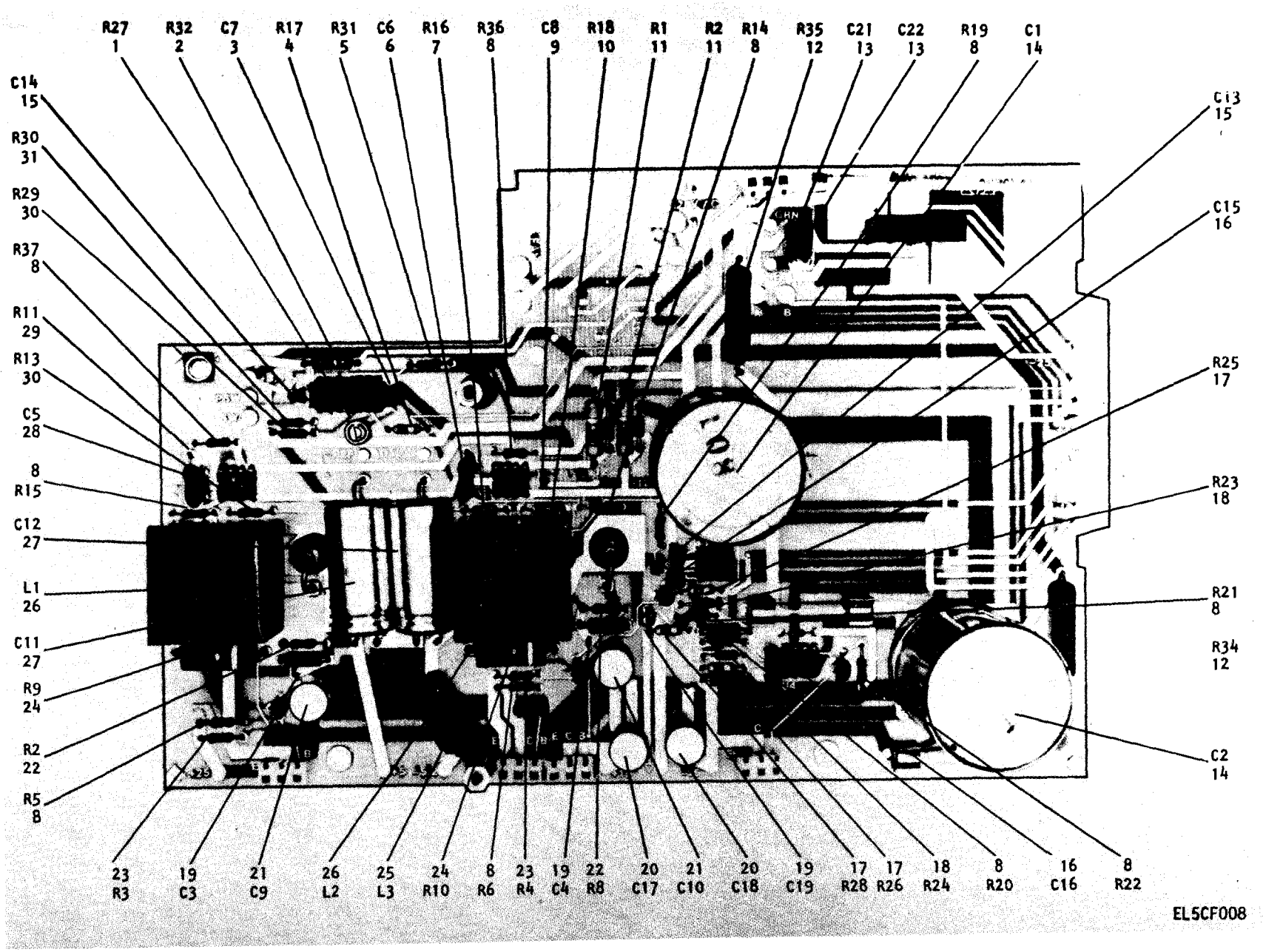

Figure 3. A2 Circuit Card Assembly (Sheet 1 of 2).

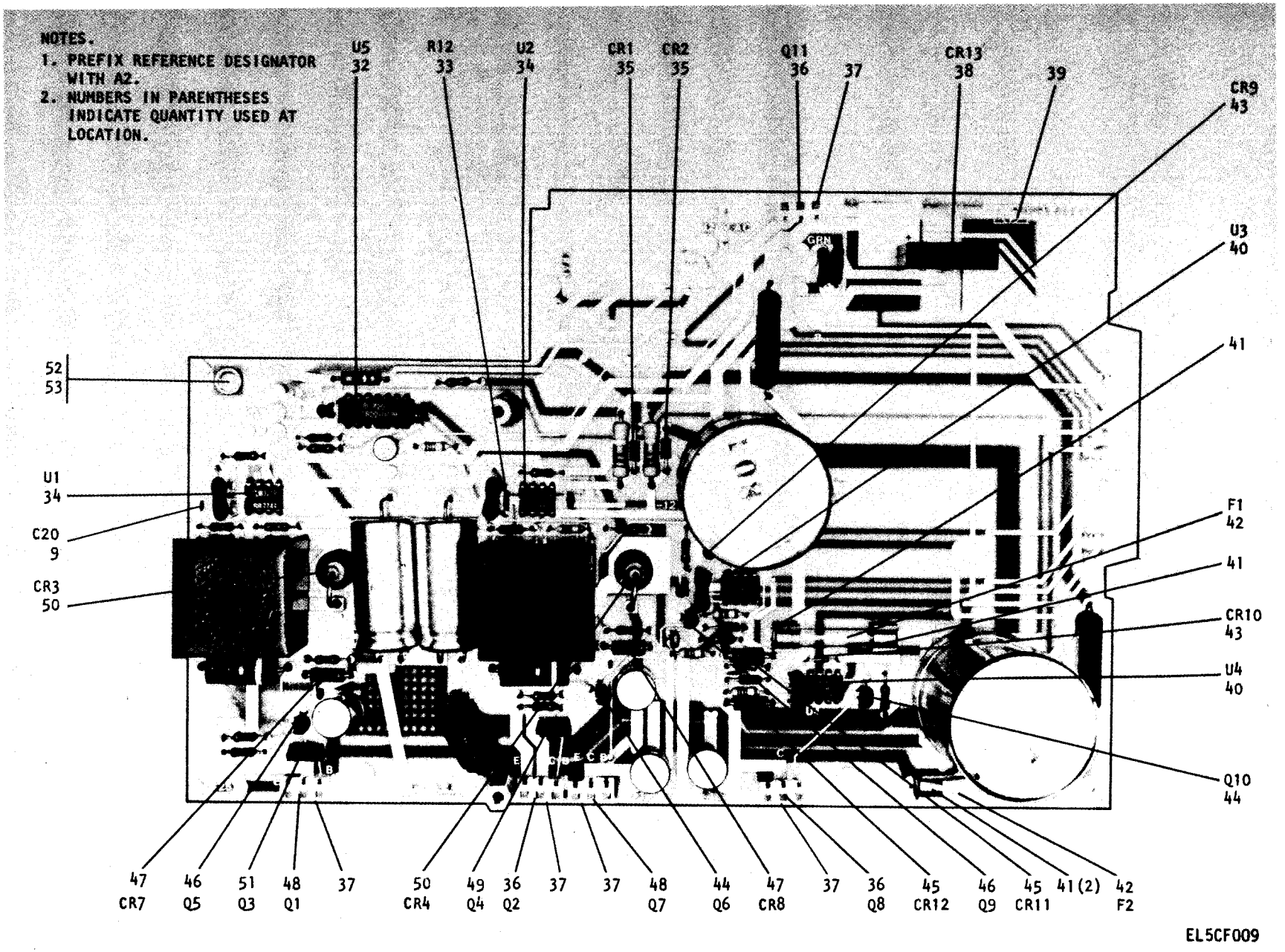

Figure 3. A2 Circuit Card Assembly (Sheet 2 of 2).

(1) ITEM NO	(2) SMR CODE	(3) FSCM	(4) PART NUMBER	(5) DESCRIPTION AND USABLE ON CODE (UOC)	(6) QTY
				GROUP 0102 CIRCUIT CARD ASSEMBLY A2 (POWER SUPPLY)	
				FIG 3	
1	PADZZ	06811	R2383	RESISTOR,VARIABLE,N	1
2	PADZZ	28480	0811-3050	RESISTOR,FIXED,WIRE	1
3	PADZZ	56289	196D336X9010KA1	CAPACITOR,FIXED,ELE USED ON SERIAL NO 1828A00001 THROUGH 1908A99999	1
4	PADZZ	81349	RNC55K1621FS	RESISTOR,FIXED,FILM	1
5	PADZZ	81349	RCR07G271JS	RESISTOR,FIXED,COMP	1
6	PADZZ	72136	DM15FA911G0	CAPACITOR,FIXED,MIC	1
7	PADZZ	81349	RNC55K3162FS	RESISTOR,FIXED,FILM	1
8	PADZZ	81349	RCR07G102JS	RESISTOR,FIXED,COMP USED ON SERIAL NO 1828A00001 THROUGH 1908A99999	10
9	PADZZ	72982	8121M112X7R0103M	CAPACITOR,FIXED,CER	2
10	PADZZ	81349	RNC60K3322FS	RESISTOR,FIXED,FILM	1
11	PADZZ	81349	RLR32C221JM	RESISTOR,FIXED,FILM USED ON SERIAL NO 1828A00001 THROUGH 1908A99999	2
12	PADZZ	81349	RWR89SR475FS	RESISTOR,FIXED,WIRE	2
13	PADZZ	81349	M39014/20-0109	CAPACITOR,FIXED,CER	2
14	PCDZZ	28480	0180-2842	CAPACITOR,FIXED,ELE	2
15	PADZZ	56289	196D105X9050HA1	CAPACITOR,FIXED,ELE USED SERIAL NO 1828A00001 THROUGH 1908A99999	2
16	PADZZ	81349	CM10CD050D03	CAPACITOR,FIXED,MIC USED ON SERIAL NO 1828A00001 THROUGH 1908A99999	2
17	PADZZ	81349	RNC60K1001FS	RESISTOR,FIXED,FILM USED ON SERIAL NO 1828A00001 THROUGH 1908A99999	3
18	PADZZ	81349		RESISTOR,FIXED,FILM USED ON SERIAL NO 1828A00001 THROUGH 1908A99999	2
19	PADZZ	81349	M39014/01-1593	CAPACITOR,FIXED,CER	3
20	PCDZZ	28480	0180-0587	CAPACITOR,FIXED,ELE	2
21	PCDZZ	28480	0180-2827	CAPACITOR,FIXED,ELE	2
22	PADZZ	81349	RCR07G681JS	RESISTOR,FIXED,COMP	2
23	PADZZ	16845	1000-409-16	TRANSISTOR	2
24	PADZZ	81349	RL42S101GTX	RESISTOR,FIXED,FILM	2
25	PADZZ	28480	9100-3139	COIL,RADIO FREQUENC	1
26	PADZZ	28480	9100-3017	REACTOR	2
27	PCDZZ	28480	0182-2832	CAPACITOR,FIXED,ELE	2
28	PADZZ	81349	CM05ED910J03	CAPACITOR,FIXED,MIC	1
29	PADZZ	81349	RCR07G824JS	RESISTOR,FIXED,COMP	1
30	PADZZ	81349	RCR07G472JS	RESISTOR,FIXED,COMP	2
31	PADZZ	81349	RCR07G113JS	RESISTOR,FIXED,COMP	1
32	PADZZ	07263	723PC	MICROCIRCUIT,LINEAR	1
33	PADZZ	81349	RCR07G105JS	RESISTOR,FIXED,COMP	1
34	PADZZ	01295	LM111JG/883B	MICROCIRCUIT,LINEAR	2
35	PADZZ	81349	JAN1N4467	SEMICONDUCTOR DEVIC	2
36	PADZZ	03508	D44H5	TRANSISTOR	3
37	PADZZ	27264	09-52-3030	CONNECTOR,RECEPTACL USED ON SERIAL NO 1828A00001 THROUGH 1908A99999	5
38	PADZZ	28480	1901-0638	RECTIFIER,SEMICONDU	1

(1) ITEM NO	(2) SMR CODE	(3) FSCM	(4) PART NUMBER	(5) DESCRIPTION AND USABLE ON CODE (UOC)	(6) QTY
39	XADZZ	28480	05328-20003	PRINTED WIRG BD	1
40	PADZZ	81349	M38510/10103BPC	MICROCIRCUIT,LINEAR	2
41	PADZZ	81349	F02A250V1/2A	FUSE,CARTRIDGE	4
42	PADZZ	81349	F02A250V2A	FUSE,CARTRIDGE	2
43	PADZZ	80131	1N3956	SEMICONDUCTOR DEVIC	2
44	PADZZ	81349	2N3638A	TRANSISTOR	2
45	PADZZ	80131	1N5354B	SEMICONDUCTOR DEVIC	2
46	PADZZ	24933	L01497	TRANSISTOR	2
47	PADZZ	80131	1N5340B	SEMICONDUCTOR DEVIC	2
48	PADZZ	03508	D45H5	TRANSISTOR	2
49	PADZZ	28480	1853-0326	TRANSISTOR	1
50	PADZZ	04713	MR820	SEMICONDUCTOR DEVIC	2
51	PADZZ	16333	MPSU01	TRANSISTOR	1
52	XBDZZ	28480	05328-00010	BRACKET,ANGLE	1
53	PADZZ	96906	MS16535-154	RIVET,TUBULAR	1

END OF FIGURE

LEGEND

REF DES	ITEM NO	REF DES	ITEM NO
CR1	7	Q1	29
CR3	16	Q2	29
CR4	16	Q3	20
C1	32	R2	12
C2	4	R3	12
C3	5	R5	1
C4	4	R6	2
C5	23	R7	31
C6	4	R8	36
C7	21	R9	27
C9	8	R10	25
C10	8	R11	24
C11	10	R12	22
C12	11	R13	(NOTE)
C13	10	R14	9
C14	17	R15	12
C15	11	R16	2
C16	14	R17	2
C17	8	R18	12
C18	8	U1	34
C19	4	U2	28
J1	35	U3	26
J2	19	U4	15
L1	33	U5	37
L2	30		
L3	13		
L4	13		

NOTE: ITEM 6 R13 NOT USED

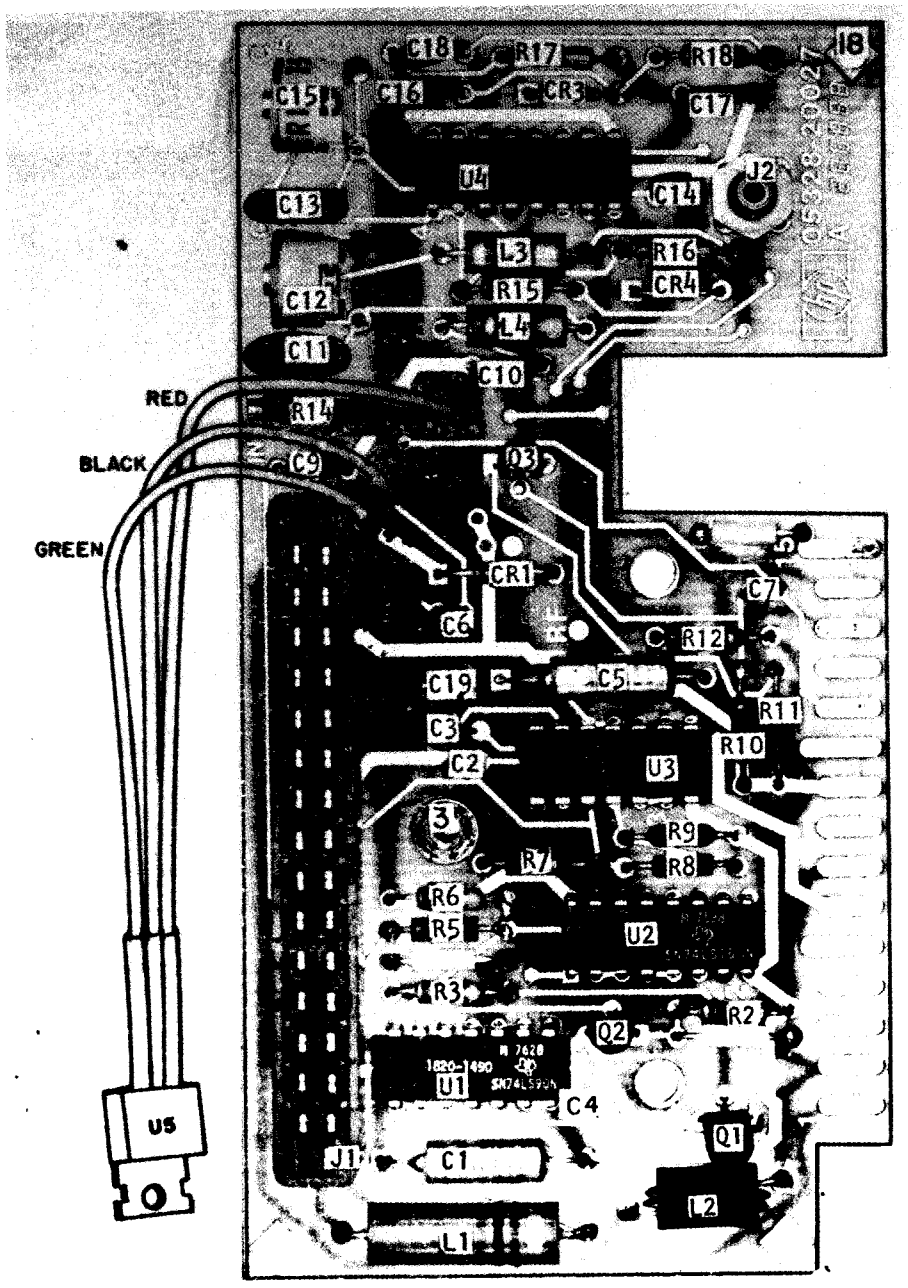

Figure 4. A3 Circuit Card Assembly.

(1) ITEM NO	(2) SMR CODE	(3) FSCM	(4) PART NUMBER	(5) DESCRIPTION AND USABLE ON CODE (UOC)	(6) QTY
				GROUP 0103 CIRCUIT CARD ASSEMBLY A3 (OSCILLATOR)	
				FIG 4	
1	PADZZ	81349	RCR07G122JS	RESISTOR,FIXED,COMP USED ON SERIAL NO 1828A00001 THROUGH 1908A99999	1
2	PADZZ	16845	1000-483-23	RESISTOR,FIXED	3
3	PADZZ	00866	1921B	POST,ELECTRICAL-MEC USED ON SERIAL NO 1828A00001 THROUGH 1908A99999	1
4	PADZZ	81349	M39014/01-1593	CAPACITOR,FIXED,CER USED ON SERIAL NO 1828A00001 THROUGH 1908A99999	4
5	PADZZ	81349	M39014/23-0319	CAPACITOR,FIXED,CER	1
6	PADZZ	81349	RWR74S2490FS	RESISTOR,FIXED,WIRE USED ON SERIAL NO 1828A00001 THROUGH 1908A99999	1
7	PADZZ	28480	1902-0579	SEMICONDUCTOR DEVIC USED ON SERIAL NO 1828A00001 THROUGH 1908A99999	1
8	PADZZ	81349	M39014/01-1593	CAPACITOR,FIXED,CER	4
9	PADZZ	80294	3006P1-103	RESISTOR,VARIABLE,N	1
10	PADZZ	28480	0140-0221	CAPACITOR,FIXED,MIC	2
11	PADZZ	94990	20-34307A13	CAPACITOR,VARIABLE,	2
12	PADZZ	81349	RCR07G102JS	RESISTOR,FIXED,COMP USED ON SERIAL NO 1828A00001 THROUGH 1908A99999	4
13	PADZZ	81349	LT4K081	COIL,RADIO FREQUENC	2
14	PADZZ	60705	C016F251F102KS22	CAPACITOR,FIXED,CER	1
15	PADZZ	81349	M38510/06302BEB	MICROCIRCUIT,DIGITA	1
16	PADZZ	80131	1N3956	SEMICONDUCTOR DEVIC	2
17	PADZZ	20932	5024E0200RD200J	CAPACITOR,FIXED,CER	1
18	XADZZ	28480	05328-20027	PRINTED WIRG BD	1
19	PADZZ	98291	50-051-0000	CONNECTOR,RECEPTACL	1
20	PADZZ	80131	2N3906	TRANSISTOR	1
21	PADZZ	81349	M39014/23-0313	CAPACITOR,FIXED,CER	1
22	PADZZ	81349	RCR07G100JS	RESISTOR,FIXED,COMP	1
23	PADZZ	81349	M39003/01-3024	CAPACITOR,FIXED,ELE	1
24	PADZZ	16845	1000-409-16	TRANSISTOR USED ON SERIAL NO 1828A00001 THROUGH 1908A99999	1
25	PADZZ	81349	RCR07G471JS	RESISTOR,FIXED,COMP USED ON SERIAL NO 1828A00001 THROUGH 1908A99999	1
26	PADZZ	07263	723PC	MICROCIRCUIT,LINEAR	1
27	PADZZ	81349	RNC60K6811FS	RESISTOR,FIXED,FILM	1
28	PADZZ	81349	M38510/30904BEB	MICROCIRCUIT,DIGITA	1
29	PADZZ	81349	JAN2N3904	TRANSISTOR	2
30	PADZZ	02114	VK20020/4B	CHOKE,RADIO FREQUEN USED ON SERIAL NO 1828A00001 THROUGH 1908A99999	1
31	PADZZ	81349	RCR07G4R7JS	RESISTOR,FIXED,COMP	1
32	PADZZ	56289	150D156X9020B2	CAPACITOR,FIXED,ELE	1
33	PADZZ	81349	LT10K060	COIL,RADIO FREQUENC	1
34	PADZZ	81349	M38510/31501BCB	MICROCIRCUIT,DIGITA	1
35	PADZZ	71785	252-15-30-300	CONNECTOR,RECEPTACL	1
36	PADZZ	81349	RNC55K5621FS	RESISTOR,FIXED,FILM	1
37	XBDZZ	28480	05328-80002	REGULATOR,VOLTAGE USED ON SERIAL NO	1

(1) ITEM NO	(2) SMR CODE	(3) FSCM	(4) PART NUMBER	(5) DESCRIPTION AND USABLE ON CODE (UOC)	(6) QTY
				2144A00001 THROUGH SUB	
				END OF FIGURE	

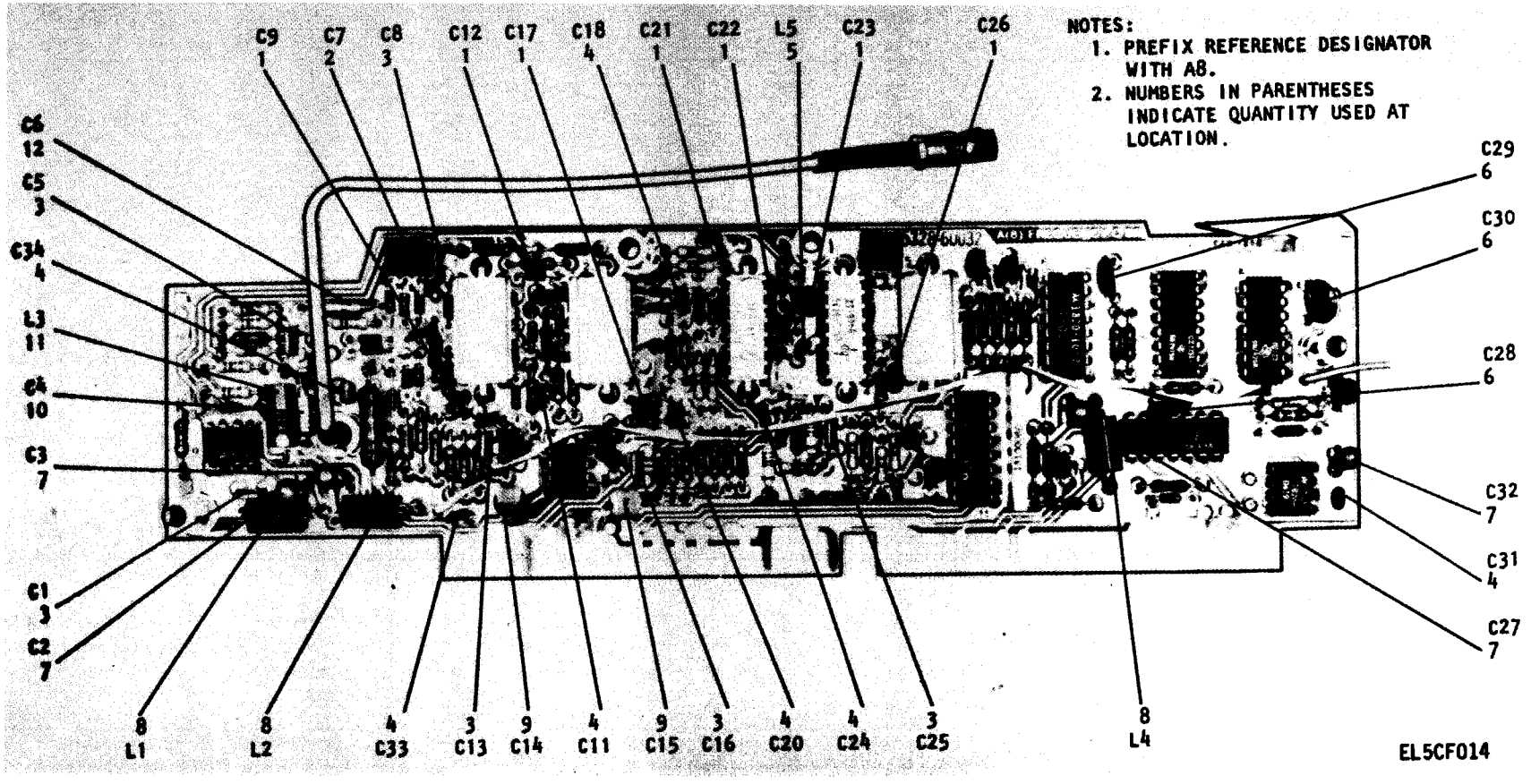

Figure 5. A8 Circuit Card Assembly (Sheet 1 of 5).

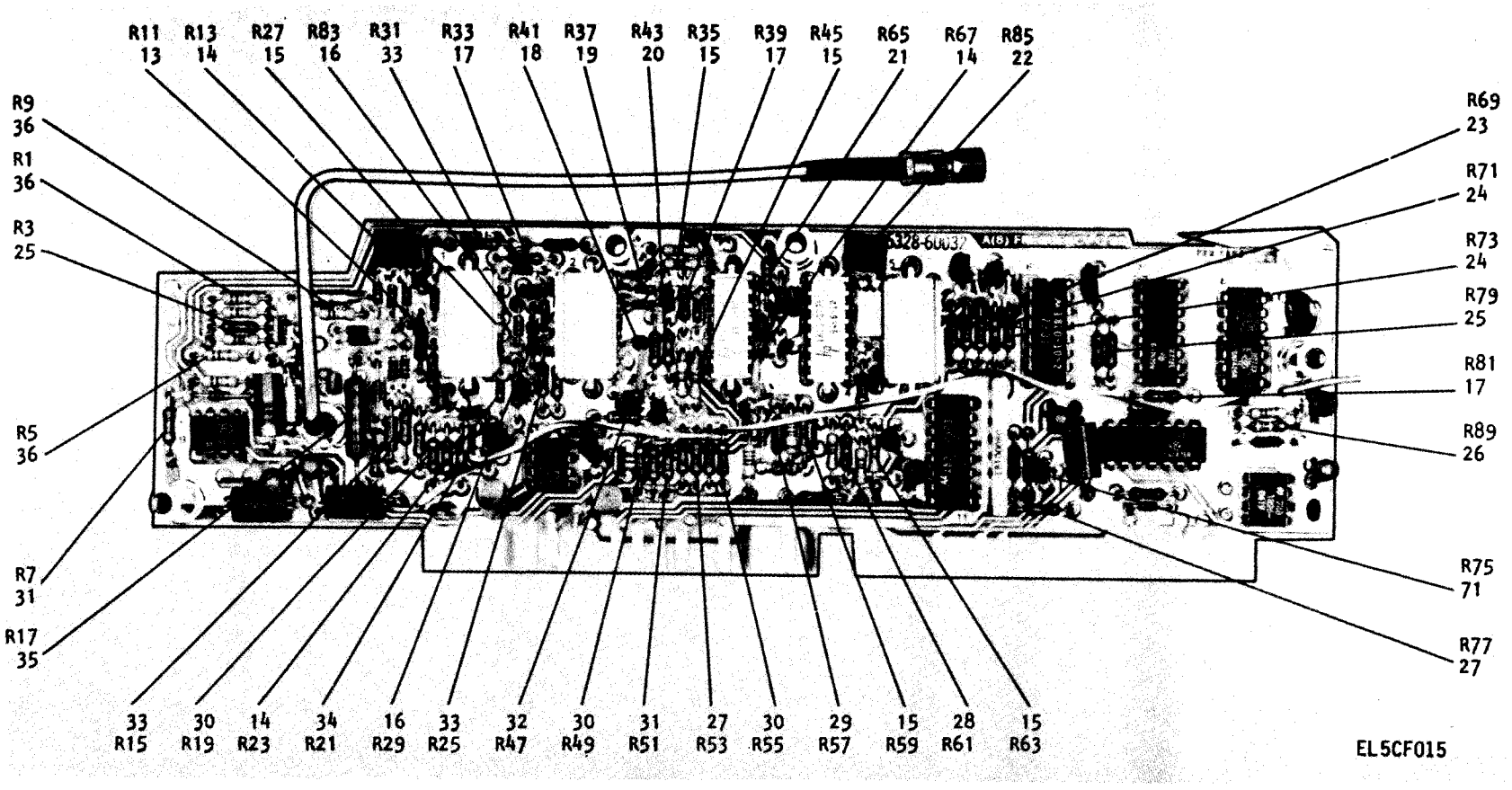

Figure 5. A8 Circuit Card Assembly (Sheet 2 of 5).

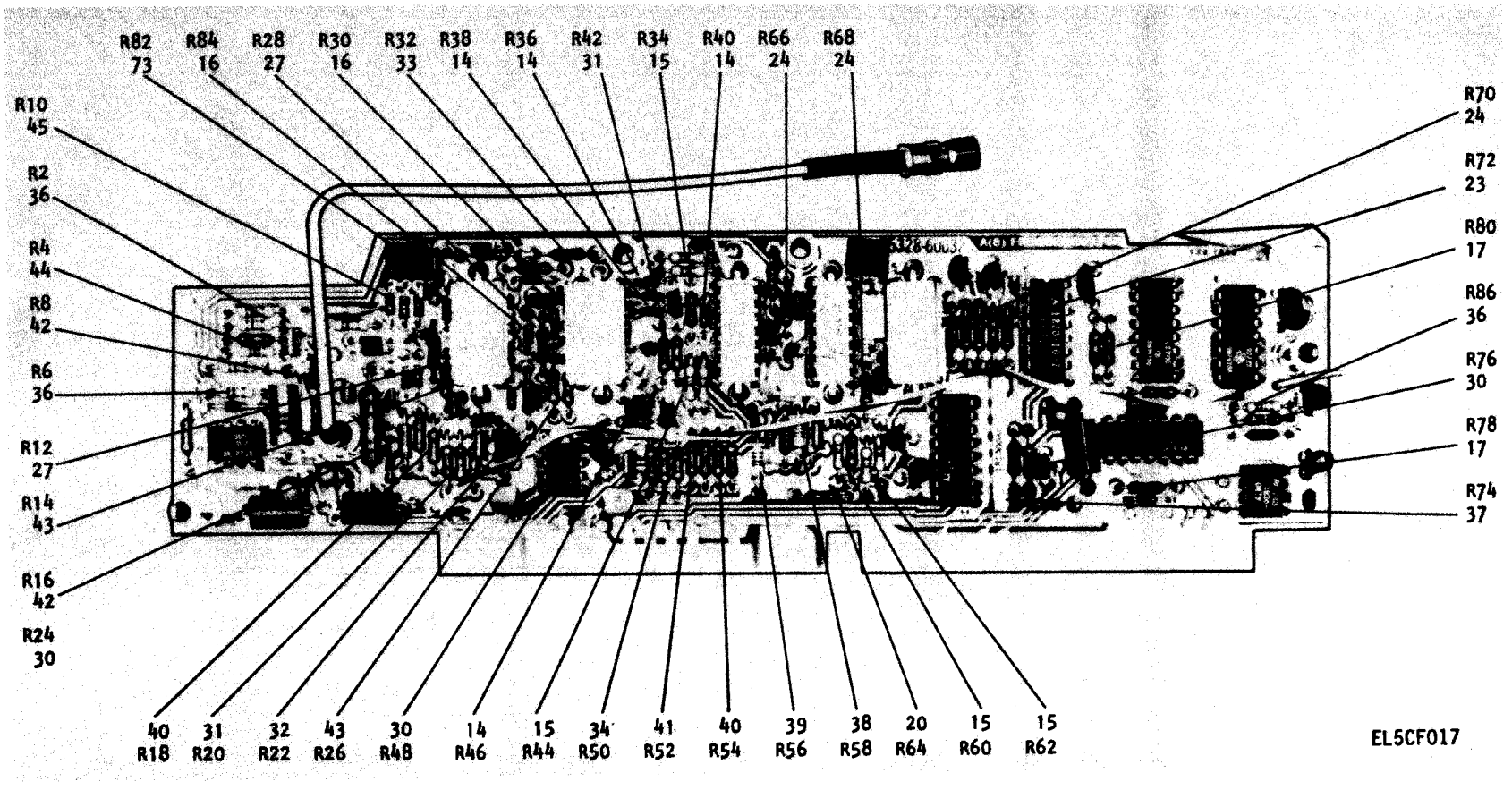

Figure 5. A8 Circuit Card Assembly (Sheet 3 of 5).

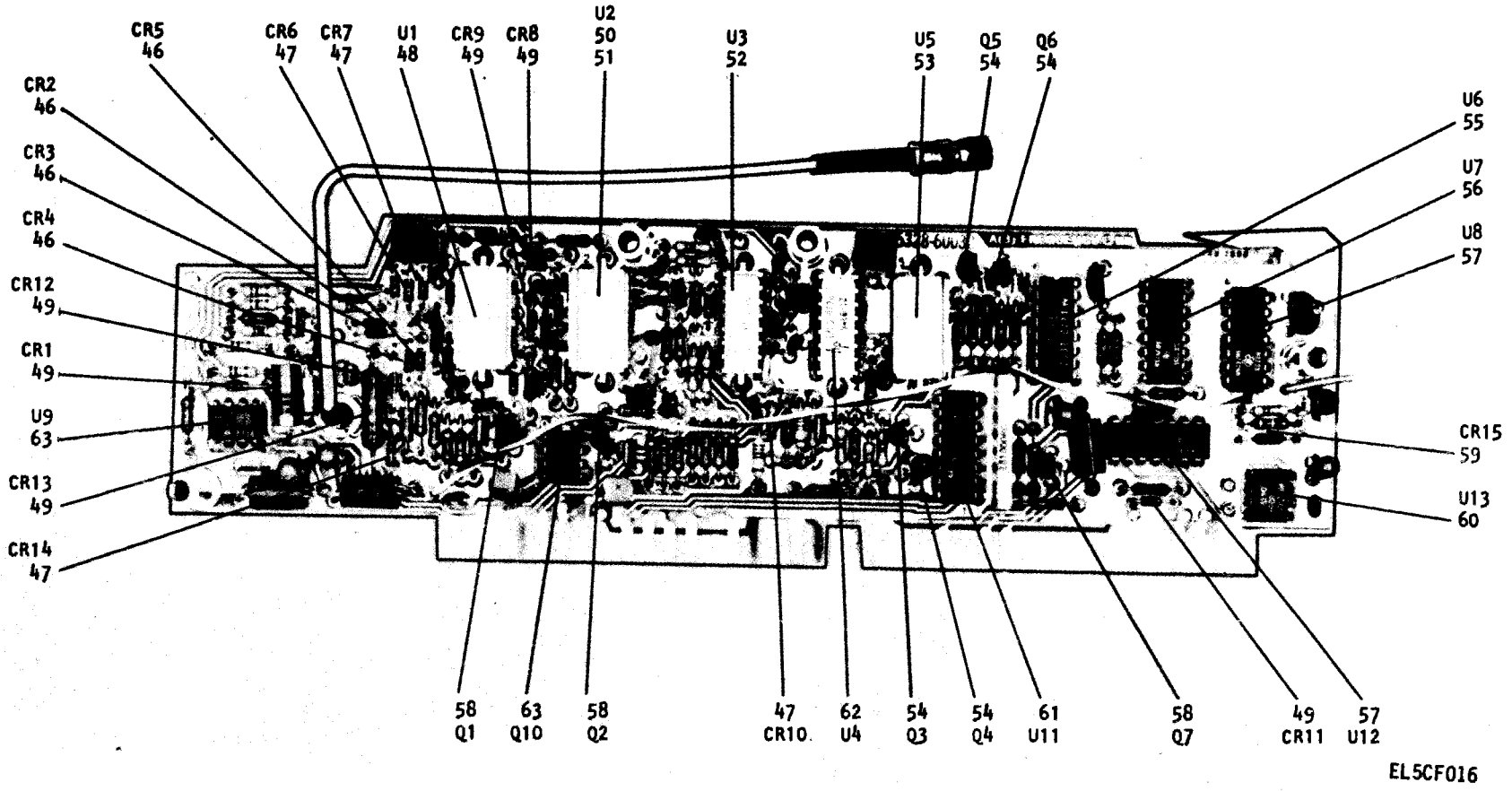

Figure 5. A8 Circuit Card Assembly (Sheet 4 of 5).

RESCREEN & SQUARE HALFTONES

14A

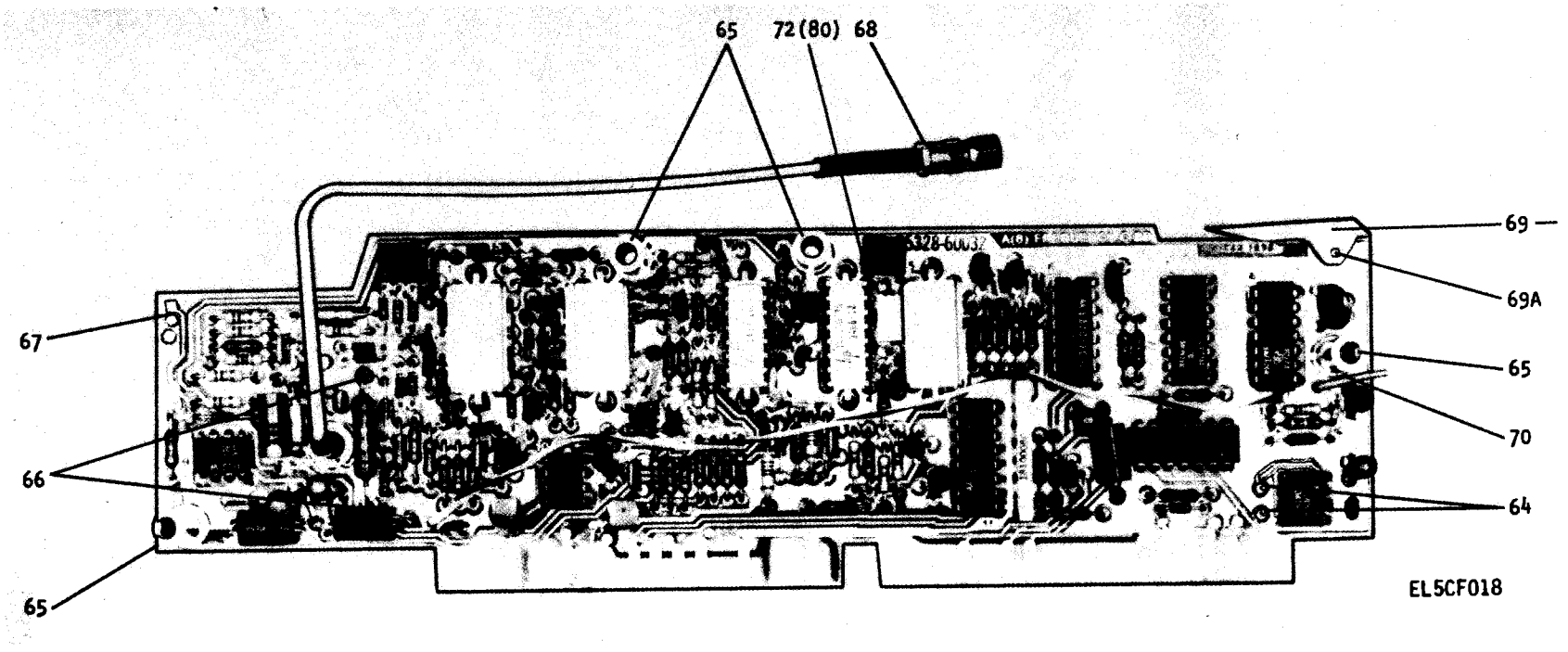

Figure 5. A8 Circuit Card Assembly (Sheet 5 of 5).

(1) ITEM NO	(2) SMR CODE	(3) FSCM	(4) PART NUMBER	(5) DESCRIPTION AND USABLE ON CODE (UOC)	(6) QTY
				GROUP 0104 CIRCUIT CARD ASSEMBLY A8 ("C" CHANNEL INPUT)	
				FIG 5	
1	PADZZ	72982	8121M112X7R0103M	CAPACITOR,FIXED,CER USED ON SERIAL NO 1828A00001 THROUGH 1908A99999	7
2	PADZZ	81349	M39014/23-0334	CAPACITOR,FIXED,CER USED ON SERIAL NO 1828A00001 THROUGH 1908A99999	1
3	PADZZ	81349	M39014/01-1593	CAPACITOR,FIXED,CER USED ON SERIAL NO 1828A00001 THROUGH 1908A99999	6
4	PADZZ	28480	0160-3878	CAPACITOR,FIXED,CER USED ON SERIAL NO 1828A00001 THROUGH 1908A99999	7
5	PADZZ	28480	05303-80001	COIL,RADIO FREQUENCY USED ON SERIAL NO 1828A00001 THROUGH 1908A99999	1
6	PADZZ	81349	M39014/01-1593	CAPACITOR,FIXED,CER USED ON SERIAL NO 1828A00001 THROUGH 1908A99999	3
7	PADZZ	56289	196D686X9006KA1	CAPACITOR,FIXED,ELE USED ON SERIAL NO 1828A00001 THROUGH 1908A99999	4
8	PADZZ	02114	VK20020/4B	CHOKE,RADIO FREQUEN USED ON SERIAL NO 1828A00001 THROUGH 1908A99999	3
9	PADZZ	56289	196D686X9006KA1	CAPACITOR,FIXED,ELE USED ON SERIAL NO 1828A00001 THROUGH 1908A99999	2
10	PADZZ	81349	M39003/01-3003	CAPACITOR,FIXED,ELE USED ON SERIAL NO 1828A00001 THROUGH 1908A99999	1
11	PADZZ	96906	MS90539-15	COIL,ELECTRICAL USED ON SERIAL NO 1828A00001 THROUGH 1908A99999	1
12	PADZZ	81349	M39003/01-2962	CAPACITOR,FIXED,ELE USED ON SERIAL NO 1828A00001 THROUGH 1908A99999	1
13	PADZZ	81349	RCR05G100JS	RESISTOR,FIXED,COMP USE ON SERIAL NO 1828A00001 THROUGH 1908A99999	1
14	PADZZ	81349	RCR05G510JS	RESISTOR,FIXED,COMP USED ON SERIAL NO 1828A00001 THROUGH 1908A99999	4
15	PADZZ	81349	CMR05C180JPDR	CAPACITOR,FIXED,MIC USED ON SERIAL NO 1828A00001 THROUGH 1908A99999	9
16	PADZZ	81349	RCR05G270JS	RESISTOR,FIXED,COMP USED ON SERIAL NO 1828A00001 THROUGH 1908A99999	4
17	PADZZ	81349	RCR07G202JS	RESISTOR,FIXED,COMP USED ON SERIAL NO 1828A00001 THROUGH 1908A99999	5
18	PADZZ	81349	RCR05G560JS	RESISTOR,FIXED,COMP USED ON SERIAL NO 1828A00001 THROUGH 1908A99999	1
19	PADZZ	81349	RCR05G300JS	RESISTOR,FIXED,COMP USED ON SERIAL NO 1828A00001 THROUGH 1908A99999	1
20	PADZZ	81349	RCR07G181JS	RESISTOR,FIXED,COMP USED ON SERIAL NO 1828A00001 THROUGH 1908A99999	2
21	PADZZ	16845	1000-409-15	TRANSISTOR USED ON SERIAL NO 1828A00001 THROUGH 1908A99999	1
22	PADZZ	32997	3329WT22-102	RESISTOR,VARIABLE,N USED ON SERIAL NO 1828A00001 THROUGH 1908A99999	1
23	PADZZ	81349	RCR07G200JS	RESISTOR,FIXED,COMP USED ON SERIAL NO 1828A00001 THROUGH 1908A99999	2

(1) ITEM NO	(2) SMR CODE	(3) FSCM	(4) PART NUMBER	(5) DESCRIPTION AND USABLE ON CODE (UOC)	(6) QTY
24	PADZZ	81349	RCR07G102JS	RESISTOR,FIXED,COMP USED ON SERIAL NO 1828A00001 THROUGH 1908A99999	5
25	PADZZ	81349	RCR07G271JS	RESISTOR,FIXED,COMP USED ON SERIAL NO 1828A00001 THROUGH 1908A99999	2
26	PADZZ	81349	RCR07G474JS	RESISTOR,FIXED,COMP USED ON SERIAL NO 1828A00001 THROUGH 1908A99999	1
27	PADZZ	81349	RCR07G561JS	RESISTOR,FIXED,COMP USED ON SERIAL NO 1828A00001 THROUGH 1908A99999	4
28	PADZZ	16845	1000-412-12	RESISTOR,FIXED USED ON SERIAL NO 1828A00001 THROUGH 1908A99999	1
29	PADZZ	81349	RNC55K3011FS	RESISTOR,FIXED,FILM USED ON SERIAL NO 1828A00001 THROUGH 1908A99999	1
30	PADZZ	81349	RCR07G512JS	RESISTOR,FIXED,COMP USED ON SERIAL NO 1828A00001 THROUGH 1908A99999	6
31	PADZZ	81349	RCR07G121JS	RESISTOR,FIXED,COMP USED ON SERIAL NO 1828A00001 THROUGH 1908A99999	4
32	PADZZ	81349	RCR07G471JS	RESISTOR,FIXED,COMP USED ON SERIAL NO 1828A00001 THROUGH 1908A99999	2
33	PADZZ	81349	RCR07G112JS	RESISTOR,FIXED,COMP USED ON SERIAL NO 1828A00001 THROUGH 1908A99999	4
34	PADZZ	81349	RCR07G513J7	RESISTOR,FIXED,COMP USED ON SERIAL NO 1828A00001 THROUGH 1908A99999	2
35	PADZZ	81349	RNC70K56R2FS	RESISTOR,FIXED,FILM	1
36	PADZZ	16845	1000-483-23	RESISTOR,FIXED USED ON SERIAL NO 1828A00001 THROUGH 1908A99999	6
37	PADZZ	28480	1810-0080	RESISTOR NETWORK,FI	1
38	PADZZ	81349	RNC60K1001FS	RESISTOR,FIXED,FILM USED ON SERIAL NO 1828A00001 THROUGH 1908A99999	1
39	PADZZ	81349	RNC55K5112FS	RESISTOR,FIXED,FILM USED ON SERIAL NO 1828A00001 THROUGH 1908A99999	1
40	PADZZ	81349	RCR07G301JS	RESISTOR,FIXED,COMP USED ON SERIAL NO 1828A00001 THROUGH 1908A99999	2
41	PADZZ	81349	RCR07G331JS	RESISTOR,FIXED,COMP USED ON SERIAL NO 1828A00001 THROUGH 1908A99999	1
42	PADZZ	81349	RCR07G821JS	RESISTOR,FIXED,COMP USED ON SERIAL NO 1828A00001 THROUGH 1908A99999	2
43	PADZZ	81349	RCR07G820JS	RESISTOR,FIXED,COMP USED ON SERIAL NO 1828A00001 THROUGH 1908A99999	2
44	PADZZ	81349	RCR07G105JS	RESISTOR,FIXED,COMP USED ON SERIAL NO 1828A00001 THROUGH 1908A99999	1
45	PADZZ	81349	RCR05G271JS	RESISTOR,FIXED,COMP USED ON SERIAL NO 1828A00001 THROUGH 1908A99999	1
46	PADZZ	81349	JAN1N5711	SEMICONDUCTOR DEVIC USED ON SERIAL NO 1828A00001 THROUGH 1908A99999	4
47	PADZZ	28480	5082-5511	SEMICONDUCTOR DEVIC USED ON SERIAL NO 1828A00001 THROUGH 1908A99999	4
48	PADZZ	28480	1826-0084	MICROCIRCUIT,LINEAR USED ON SERIAL NO 1828A00001 THROUGH 1908A99999	1
49	PADZZ	28480	1901-0050	SEMICONDUCTOR DEVIC USED ON SERIAL NO 1828A00001 THROUGH 1908A99999	6
50	PADZZ	28480	1826-0085	MICROCIRCUIT,LINEAR USED ON SERIAL NO 1828A00001 THROUGH 1908A99999	1

(1) ITEM NO	(2) SMR CODE	(3) FSCM	(4) PART NUMBER	(5) DESCRIPTION AND USABLE ON CODE (UOC)	(6) QTY
51	PADZZ	28480	1826-0085	MICROCIRCUIT,LINEAR USED ON SERIAL NO 1828A00001 THROUGH 1908A99999	1
52	PADZZ	28480	1820-2112	MICROCIRCUIT,DIGITA USED ON SERIAL NO 1828A00001 THROUGH 1908A99999	1
53	PADZZ	50440	1820-2642	MICROCIRCUIT,DIGITA USED ON SERIAL NO 1828A00001 THROUGH 1908A99999	1
54	PADZZ	81349	JAN2N3563	TRANSISTOR	4
55	PADZZ	81349	M38510/06302BEB	MICROCIRCUIT,DIGITA	1
56	PADZZ	81349	M38510/01501BEB	MICROCIRCUIT,DIGITA	1
57	PADZZ	81349	M38510/00805BCB	MICROCIRCUIT,DIGITA	2
58	PADZZ	04713	SPS5103	TRANSISTOR USED ON SERIAL NO 1828A00001 THROUGH 1908A99999	3
59	PADZZ	28480	1902-0126	SEMICONDUCTOR DEVIC USED ON SERIAL NO 1828A00001 THROUGH 1908A99999	1
60	PADZZ	28480	1826-0419	MICROCIRCUIT,LINEAR	1
61	PADZZ	81349	M38510/06003BEB	MICROCIRCUIT,DIGITA	1
62	PADZZ	28480	1820-1019	MICROCIRCUIT,DIGITA	1
63	PADZZ	26916	058-001691	MICROCIRCUIT,LINEAR USED ON SERIAL NO 1828A00001 THROUGH 1908A99999	2
64	PADZZ	28480	0360-0124	TERMINAL,STUD USED ON SERIAL NO 1828A00001 THROUGH 1908A99999	2
65	PADZZ	00866	1921B	POST,ELECTRICAL-MEC USED ON SERIAL NO 1828A00001 THROUGH 1908A99999	4
66	PADZZ	00779	1-331677-3	CONTACT,ELECTRICAL	2
67	XADZZ	28480	05328-20016	PRINTED WIRG BD	1
68	PADZZ	28480		CABLE ASSEMBLY,RADI	1
69	PADZZ	28480	5040-4529	EXTRACTOR,ELECTRICAL	1
69A	XBDZZ	73957	GP24-063X250-12	PIN,GRVD,HDLS	1
70	PADZZ	00779	42718-3	TERMINAL,QUICK DISC USED ON SERIAL NO 1828A00001 THROUGH 1908A99999	1
71	PADZZ	81349	RCR07G152JS	RESISTOR,FIXED,COMP USED ON SERIAL NO 1828A00001 THROUGH 1908A99999	1
72	PADZA	89536	376418	CONTACT,ELECTRICAL USED ON SERIAL NO 1828A00001 THROUGH 1908A99999	80
73	PADZZ	28480	2100-2522	RESISTOR,VARIABLE,N USED ON SERIAL NO 1828A00001 THROUGH 1908A99999	1

END OF FIGURE

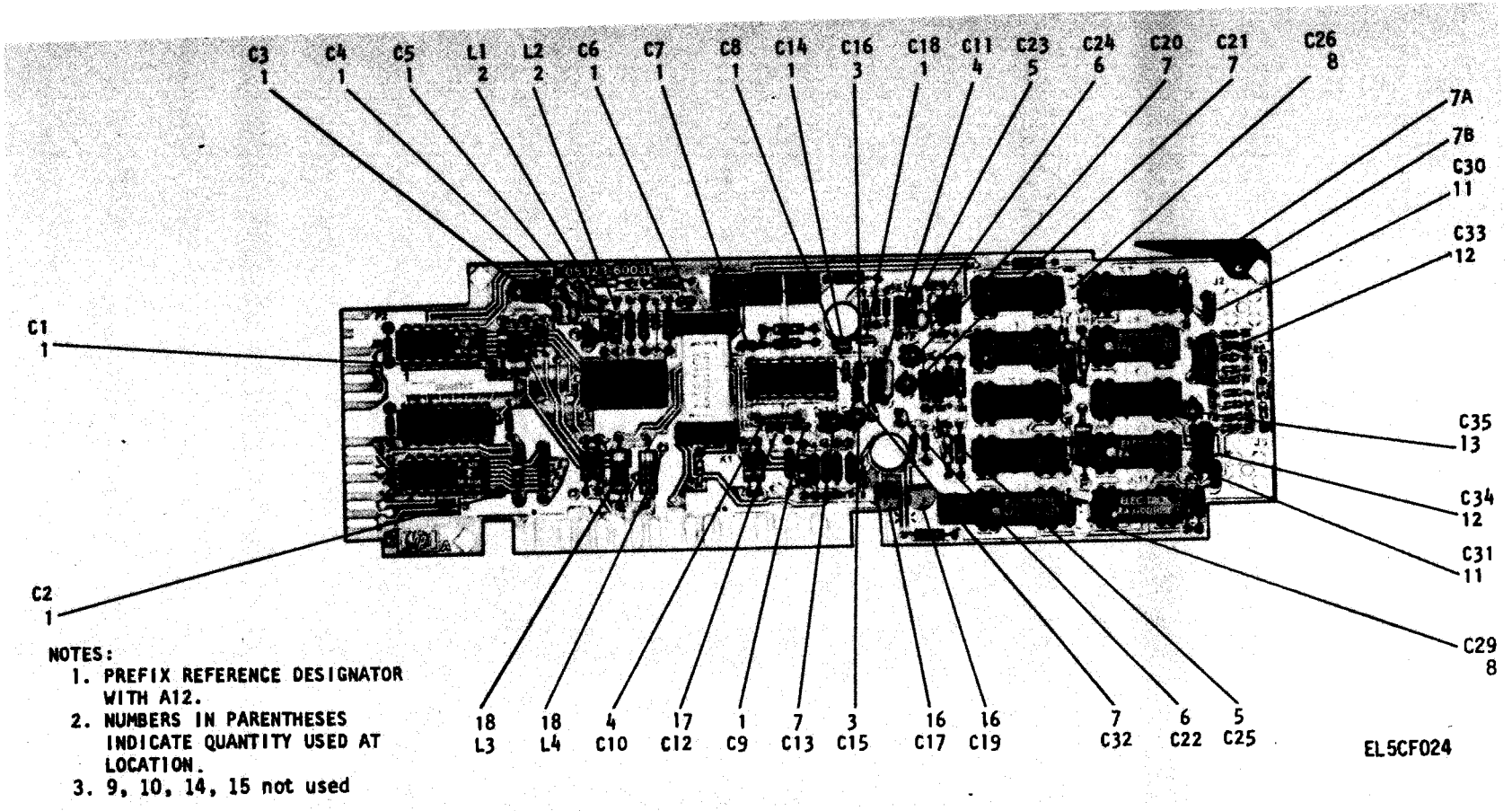

NOTES:
1. PREFIX REFERENCE DESIGNATOR WITH A12.
2. NUMBERS IN PARENTHESES INDICATE QUANTITY USED AT LOCATION.
3. 9, 10, 14, 15 not used

Figure 6. A12 Circuit Card Assembly (Sheet 1 of 3).

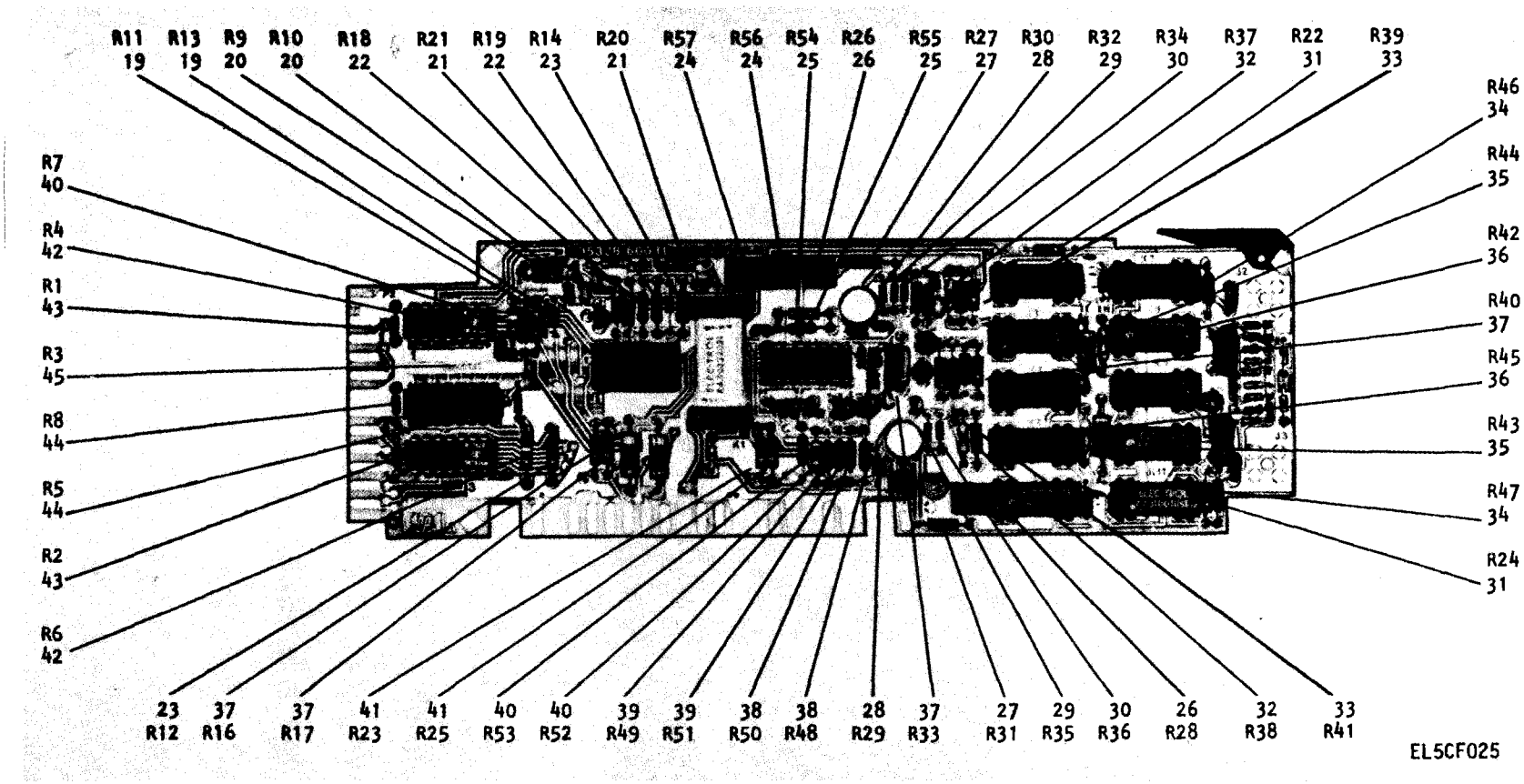

Figure 6. A12 Circuit Card Assembly (Sheet 2 of 3).

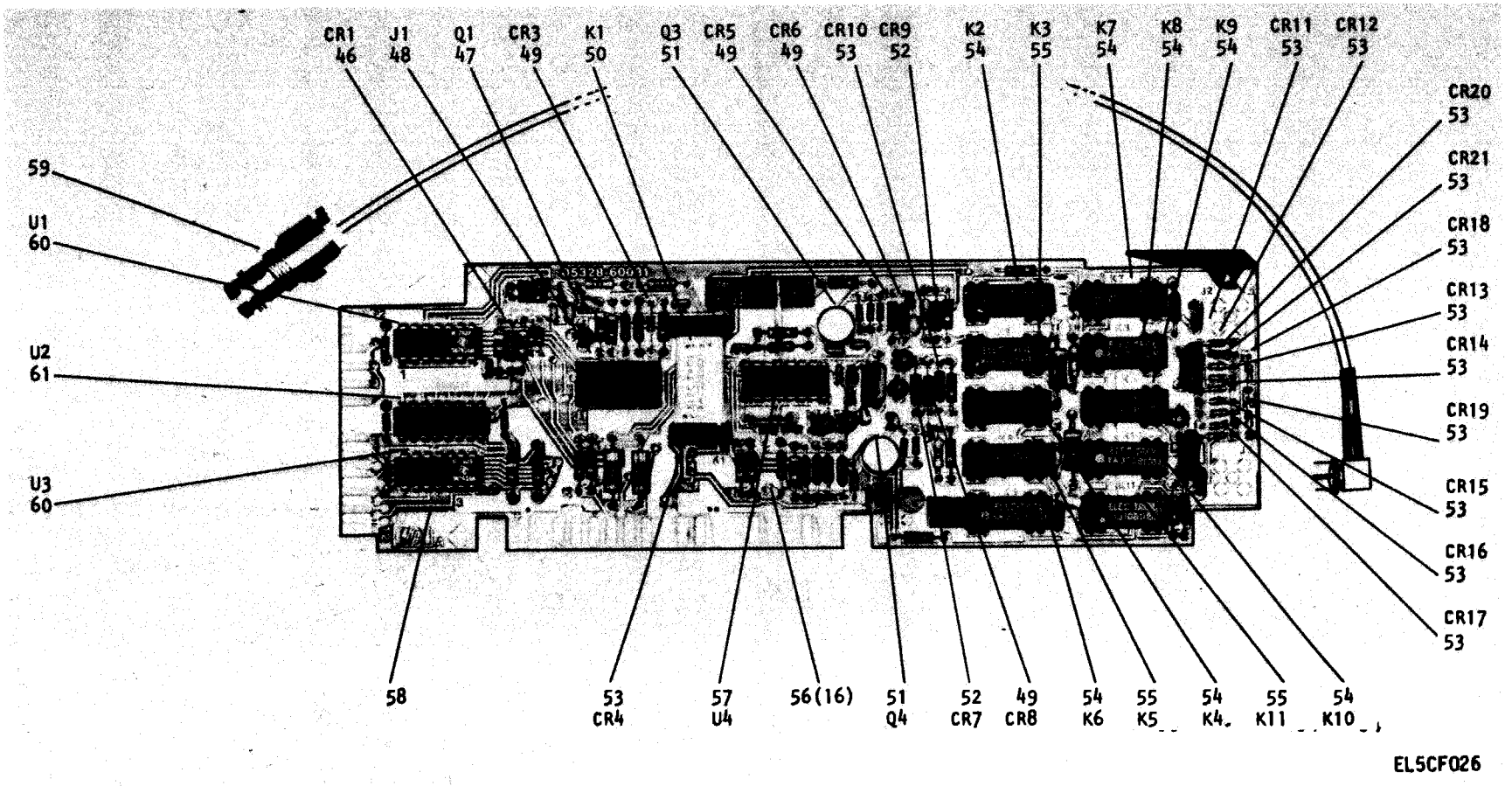

Figure 6. A12 Circuit Card Assembly (Sheet 3 of 3).

(1) ITEM NO	(2) SMR CODE	(3) FSCM	(4) PART NUMBER	(5) DESCRIPTION AND USABLE ON CODE (UOC)	(6) QTY
				GROUP 0105 CIRCUIT CARD ASSEMBLY A12 ("A-B" CHANNEL INPUT)	
				FIG 6	
1	PADZZ	72982	8121M112X7R0103M	CAPACITOR,FIXED,CER USED ON SERIAL NO 1828A00001 THROUGH 1908A99999	11
2	PADZZ	96906	MS75085-19	COIL,RADIO FREQUENC	2
3	PADZZ	81349	M39014/01-1593	CAPACITOR,FIXED,CER	2
4	PADZZ	81349	M39014/20-0109	CAPACITOR,FIXED,CER	2
5	PADZZ	28480	0160-4423	CAPACITOR,FIXED,CER	2
6	PADZZ	81349	M39014/23-0313	CAPACITOR,FIXED,CER	2
7	PADZZ	56289	196D686X9006KA1	CAPACITOR,FIXED,ELE USED ON SERIAL NO 1828A00001 THROUGH 1908A99999	3
7A	PADZZ	28480	5040-5112	EXTRACTOR,ELECTRICA	1
7B	PADZZ	73957	GP24-063X250-12	PIN,GOOOVED,HEADLES	1
8	PADZZ	81349	CC22CJ3R3C	CAPACITOR,FIXED,CER USED ON SERIAL NO 1828A00001 THROUGH 1908A99999	2
8	PADZZ	28480	0160-2242	CAPACITOR,FIXED,CER USED ON SERIAL NO 1828A00001 THROUGH 1908A99999	1
8	PADZZ	81349	CC20CJ3R0C	CAPACITOR,FIXED,CER SELECT AT TEST	1
8	PADZZ	28480	0160-2246	CAPACITOR,FIXED,CER SELECT AT TEST	1
11	PADZZ	72982	8131-500WR5R0473 K	CAPACITOR,FIXED,CER	2
12	PADZZ	72136	RDM15F301F3C	CAPACITOR,FIXED,MTC	2
13	PADZZ	18796	8101A100C0G0479C	CAPACITOR,FIXED,CER	1
16	PADZZ	56289	196D106X9025KA1	CAPACITOR,FIXED,ELE	2
17	PADZZ	18796	8111A200C0G0100J	CAPACITOR,FIXED,CER USED ON SERIAL NO 1828A00001 THROUGH 1908A99999	1
18	PADZZ	96906	MS14046-5	COIL,RADIO FREQUENC	2
19	PADZZ	81349	RNC55K2370FS	RESISTOR,FIXED,FILM USED ON SERIAL NO 1828A00001 THROUGH 1908A99999	2
20	PADZZ	81349	RCR07G821JS	RESISTOR,FIXED,COMP USED ON SERIAL NO 1828A00001 THROUGH 1908A99999	2
21	PADZZ	81349	RCR07G100JS	RESISTOR,FIXED,COMP	2
22	PADZZ	16845	1000-412-12	RESISTOR,FIXED USED ON SERIAL NO 1828A00001 THROUGH 1908A99999	2
23	PADZZ	81349	RCR07G102JS	RESISTOR,FIXED,COMP USED ON SERIAL NO 1828A00001 THROUGH 1908A99999	1
24	PADZZ	32997	3329WT22-102	RESISTOR,VARIABLE,N USED ON SERIAL NO 1828A00001 THROUGH 1908A99999	2
25	PADZZ	16845	1000-409-16	TRANSISTOR USED ON SERIAL NO 1828A00001 THROUGH 1908A99999	2
26	PADZZ	80294	3329W1-101	RESISTOR,VARIABLE, N USED ON SERIAL NO 1828A00001 THROUGH 1908A99999	2
27	PADZZ	81349	RNC50K5110FS	RESISTOR,FIXED,FILM USED ON SERIAL NO 1828A00001 THROUGH 1908A99999	2
28	PADZZ	81349	RCR07G561JS	RESISTOR,FIXED,COMP USED ON SERIAL NO 1828A00001 THROUGH 1908A99999	2
29	PADZZ	81349	RLR05C5620FS	RESISTOR,FIXED,FILM USED ON SERIAL NO 1828A00001 THROUGH 1908A99999	2

(1) ITEM NO	(2) SMR CODE	(3) FSCM	(4) PART NUMBER	(5) DESCRIPTION AND USABLE ON CODE (UOC)	(6) QTY
30	PADZZ	81349	RCR05G100JS	RESISTOR,FIXED,COMP USED ON SERIAL NO 1828A00001 THROUGH 1908A99999	2
31	PADZZ	81349	RCR07G331JS	RESISTOR,FIXED,COMP	2
32	PADZZ	81349	RCR07G105JS	RESISTOR,FIXED,COMP USED ON SERIAL NO 1828A00001 THROUGH 1908A99999	2
33	PADZZ	81349	RCR07G200JS	RESISTOR,FIXED,COMP	2
34	PADZZ	81349	RNC65K1370FS	RESISTOR,FIXED,FILM	2
35	PADZZ	81349	RNC56J9002BS	RESISTOR,FIXED,FILM	2
36	PADZZ	81349	RNC60K9093FS	RESISTOR,FIXED,FILM	2
37	PADZZ	81349	RCR07G511JS	RESISTOR,FIXED,COMP	4
38	PADZZ	81349	RNC55K2001FS	RESISTOR,FIXED,FILM	2
39	PADZZ	81349	RNC60K1000FS	RESISTOR,FIXED,FILM	2
40	PADZZ	81349	RCR07G472JS	RESISTOR,FIXED,COMP	3
41	PADZZ	16845	1000-483-23	RESISTOR,FIXED	2
42	PADZZ	81349	RCR07G392JS	RESISTOR,FIXED,COMP USED ON SERIAL NO 1828A00001 THROUGH 1908A99999	2
43	PADZZ	81349	RCR05G103JS	RESISTOR,FIXED,COMP USED ON SERIAL NO 1828A00001 THROUGH 1908A99999	2
44	PADZZ	81349	RCR05G472JS	RESISTOR,FIXED,COMP USED ON SERIAL NO 1828A00001 THROUGH 1908A99999	2
45	PADZZ	28480	1810-0080	RESISTOR NETWORK,FI	1
46	PADZZ	28480	1902-3082	SEMICONDUCTOR DEVIC USED ON SERIAL NO 1828A00001 THROUGH 1908A99999	1
47	PADZZ	04713	SPS5103	TRANSISTOR	1
48	PADZZ	28480	1200-0548	SOCKET,PLUG-IN ELEC	1
49	PADZZ	28480	1901-0376	SEMICONDUCTOR DEVIC	4
50	PADZZ	28480	0490-0642	RELAY,REED	1
51	PADZZ	80131	2N5912	SEMICONDUCTOR DEVIC	2
52	PADZZ	28480	1902-3048	SEMICONDUCTOR DEVIC	2
53	PADZZ	80131	1N3956	SEMICONDUCTOR DEVIC	13
54	PADZZ	28480	0490-1175	COIL,ELECTRICAL USED ON SERIAL NO 1828A00001 THROUGH 1908A99999	7
55	PADZZ	28480	0490-1183	COIL,ELECTRICAL	3
56	PADZA	89536	376418	CONTACT,ELECTRICAL USED ON SERIAL NO 1828A00001 THROUGH 1908A99999	16
57	PADZZ	28480	1826-0426	MICROCIRCUIT,LINEAR	1
58	XADZZ	28480	05328-20031	PRINTED WIRG BD	1
59	PADZZ	28480	05328-60111	CABLE ASSEMBLY,RADI USED ON SERIAL NO 1828A00001 THROUGH 1908A99999	13
60	PADZZ	14933	L01476	MICROCIRCUIT,DIGITA	2
61	PADZZ	28480	1820-0805	MICROCIRCUIT,DIGITA	1

END OF FIGURE

NATIONAL STOCK NUMBER AND PART NUMBER INDEX

NATIONAL STOCK NUMBER INDEX

STOCK NUMBER	FIG.	ITEM	STOCK NUMBER	FIG.	ITEM
5910-00-007-0803	3	3	5905-00-114-0711	3	30
5910-00-007-2000	5	12		6	40
5910-00-007-2002	2	2	5905-00-114-5339	2	28
	5	10	5905-00-116-2394	2	21
5961-00-007-4120	3	38		6	37
5910-00-010-8159	2	1	5905-00-116-8554	3	33
5910-00-010-8717	3	19		5	44
	4	4		6	32
	4	8	5910-00-118-7902	3	16
	5	3	5905-00-119-3503	2	20
	5	6		3	5
	6	3		5	25
5950-00-031-3779	6	2	5905-00-119-8768	5	42
5310-00-045-4007	1	75		6	20
5910-00-054-0761	3	6	5905-00-119-8812	5	31
5305-00-054-5654	1	87	5905-00-119-8855	5	33
5305-00-054-6650	1	58	5905-00-120-9154	4	25
5305-00-054-6651	1	61		5	32
5910-00-056-4557	2	18	5905-00-126-6677	2	38
5310-00-058-3599	1	84	5905-00-131-1255	4	1
5940-00-065-5029	1	68	5905-00-133-0440	2	32
	1	102	5905-00-135-3972	5	23
	5	70		6	33
5935-00-068-3546	4	19	5905-00-135-3974	2	42
5950-00-070-7644	4	33	5905-00-135-6046	2	30
5910-00-078-1950	6	12		3	22
5355-00-100-6778	1	21	5905-00-136-3890	5	34
5905-00-104-8363	5	43	5961-00-137-4608	2	48
5905-00-105-7767	5	26		5	58
5905-00-105-7768	5	27		6	47
	6	28	5905-00-141-0742	5	20
5905-00-106-1356	2	39	5905-00-141-0743	6	42
	5	71	5910-00-144-4381	4	23
5905-00-106-1357	2	33	5910-00-144-4383	2	5
5905-00-107-0656	4	22	5961-00-147-0107	6	52
	6	21	5961-00-147-9600	3	35
5905-00-110-7620	2	29	5961-00-148-2479	3	45
	3	8	5910-00-161-4431	6	13
	4	12	5905-00-165-3153	2	34
	5	24	5905-00-172-2988	6	26
	6	23	5910-00-187-0032	2	15
5905-00-111-1679	5	30	5905-00-197-0221	5	16
5905-00-111-4727	2	43	5910-00-205-9119	6	16
5905-00-111-4750	5	40	5310-00-209-1366	1	56
5905-00-111-4845	2	37	5999-00-230-8833	5	69
5905-00-114-0708	5	17	5999-00-230-8834	6	7A
5905-00-114-0710	2	41	5961-00-232-3279	5	46
	5	41	5935-00-233-6728	1	39
	6	31	5935-00-238-5507	3	37
5905-00-114-0711	2	31	5905-00-243-1778	4	9

NATIONAL STOCK NUMBER AND PART NUMBER INDEX

NATIONAL STOCK NUMBER INDEX

STOCK NUMBER	FIG.	ITEM	STOCK NUMBER	FIG.	ITEM
5905-00-244-6934	3	29	5905-00-432-0423	5	39
5910-00-246-8723	4	11	5905-00-432-6373	3	4
5905-00-246-9393	4	31	5905-00-432-6384	4	36
5905-00-255-3699	5	13	5905-00-432-6410	3	17
	6	30		5	38
5905-00-255-3701	5	18	5905-00-432-9152	2	27
5310-00-269-6498	1	17		5	29
5920-00-280-4960	1	34	5310-00-443-5580	2	11
	1	104	5935-00-446-8768	2	7
	3	42	5961-00-448-9737	2	59
5920-00-280-8342	1	36		6	46
	1	103	5905-00-451-7533	4	27
5920-00-280-8344	3	41	5961-00-451-8685	5	47
5905-00-284-8220	6	36	5961-00-452-0438	4	7
5962-00-318-2223	2	56	5310-00-460-3056	1	22
5962-00-329-4591	2	74	5910-00-462-4093	6	17
5962-00-329-4592	2	51	5310-00-469-4042	1	6
5962-00-329-4613	2	67	5950-00-470-0660	3	25
5962-00-329-4689	6	60	5905-00-470-7377	2	40
5962-00-331-9837	2	44	5961-00-471-2984	3	49
5910-00-348-2617	5	4	5905-00-476-5797	5	73
5961-00-357-3023	3	46	5962-00-476-8339	2	60
5962-00-361-8648	2	52	5910-00-477-8011	3	9
5905-00-369-6932	3	31		5	1
5962-00-369-7607	2	63		6	1
5962-00-372-0476	2	70	5905-00-479-6619	5	19
5910-00-375-0840	2	17	5920-00-480-4063	1	9A
5962-00-396-2587	2	75	5935-00-481-4141	2	50
5905-00-401-7425	5	45	5961-00-483-4590	3	47
5935-00-405-7720	2	13	5962-00-493-5961	2	49
	4	35	5910-00-495-0042	2	9
5905-00-405-8103	2	36	5905-00-506-6618	6	27
5930-00-406-8746	1	32	5962-00-506-6810	5	50
5905-00-412-0758	5	14		5	51
5905-00-412-0819	3	7	5910-00-506-7014	2	16
5962-00-417-1080	3	32	5962-00-506-7641	5	48
	4	26	5999-00-511-4046	5	66
5365-00-419-1039	1	23	5962-00-513-2691	5	53
5905-00-426-7133	6	39	5962-00-515-3254	2	62
5910-00-428-2671	3	15	5310-00-543-2410	1	86
5962-00-428-7809	2	58	5905-00-548-0915	2	23
5962-00-428-8070	2	47	5905-00-549-1437	5	35
5905-00-430-1509	6	19	5310-00-550-0284	1	81
5962-00-430-2740	2	45	5961-00-565-8435	6	51
5910-00-430-5697	6	8	5955-00-571-9496	1	106
5905-00-431-7825	2	26	5910-00-581-7132	5	7
5905-00-432-0401	2	24		5	9
	3	18		6	7
	6	38	5962-00-595-8504	2	53
5905-00-432-0415	2	25		5	56

NATIONAL STOCK NUMBER AND PART NUMBER INDEX

NATIONAL STOCK NUMBER INDEX

STOCK NUMBER	FIG.	ITEM	STOCK NUMBER	FIG.	ITEM
5961-00-596-3284	3	50	5315-01-013-3933	6	7B
5310-00-596-7681	1	7	5910-01-013-5022	6	11
5905-00-617-5091	6	44	5962-01-015-8537	5	57
5305-00-720-8847	1	82	5961-01-020-6730	3	48
	2	12	5961-01-021-5211	3	36
5905-00-721-2385	3	10	5962-01-022-3250	5	62
5905-00-724-5636	3	11	5961-01-022-8408	1	101
5950-00-734-3940	4	13	5961-01-025-4606	1	4
5961-00-752-6115	2	72	5905-01-028-1641	5	22
5961-00-756-6815	3	51		6	24
5961-00-762-3115	2	54	5910-01-030-1101	2	10
	3	43	5905-01-035-5065	6	43
	4	16	5365-01-039-4427	1	3
	6	53	5962-01-039-9414	5	63
5305-00-763-6960	1	19A	5950-01-042-1960	5	5
5305-00-763-6963	1	76	5910-01-043-6895	5	15
5905-00-763-8769	3	1	5962-01-048-9561	2	71
5305-00-765-4244	1	69	5961-01-049-6785	1	100
5910-00-772-6728	4	10	5962-01-051-5005	2	61
5961-00-780-8330	5	59	5962-01-052-2957	2	65
5910-00-788-0328	2	3	5910-01-056-2163	4	17
5961-00-790-7834	6	49	5970-01-057-6010	1	8
5320-00-826-0329	1	40	5930-01-057-6811	1	27
5935-00-853-7596	1	45	5930-01-057-6812	1	26
5310-00-878-2193	1	19	5930-01-057-7021	1	28
5320-00-879-6606	1	31	5905-01-057-8089	3	2
	3	53	5905-01-057-8115	5	37
5920-00-879-8408	1	35		6	45
	1	105	5910-01-057-8160	6	5
5310-00-880-5976	1	77	5920-01-057-8171	1	9
5950-00-893-8650	5	11	5935-01-058-0776	6	48
5961-00-912-9008	3	44	5935-01-058-0804	1	5
5961-00-914-7496	2	66	5962-01-058-1041	2	67
	5	49	5920-01-058-1251	1	38
5910-00-917-9737	2	14	5935-01-058-1256	2	6
5961-00-931-0372	4	20	5935-01-058-1258	2	68
5310-00-934-9748	1	83	5935-01-058-1289	1	10
5961-00-943-7572	2	55	5962-01-058-1535	5	60
	5	54	5962-01-058-1536	1	95
5910-00-950-2380	6	8	5962-01-058-1540	2	73
5310-00-951-4679	1	85	5962-01-058-1541	6	61
5961-00-954-9182	2	57	5945-01-058-1568	6	50
5910-00-957-2765	6	8	5962-01-058-4411	6	57
5305-00-958-2918	1	92	5961-01-058-7907	1	99
5305-00-969-6495	1	55	5950-01-058-9732	3	26
5940-00-993-9338	2	8	5950-01-058-9735	1	78
	5	64	5962-01-059-0583	4	28
5950-01-010-1194	6	18	5355-01-061-7482	1	11
5355-01-011-4975	1	24	6625-01-061-8904	1	64
5970-01-013-2132	1	80	5305-01-061-9679	1	16

NATIONAL STOCK NUMBER AND PART NUMBER INDEX

NATIONAL STOCK NUMBER INDEX

STOCK NUMBER	FIG.	ITEM	STOCK NUMBER	FIG.	ITEM
5999-01-062-0125	1	73A	5962-01-103-5080	5	55
5999-01-062-0126	1	95A	6150-01-111-1717	1	96
6625-01-062-0127	1	91D	5310-01-112-1496	1	37
6625-01-062-0128	1	91B	5999-01-118-5835	5	72
5999-01-062-0129	1	70A		6	56
5999-01-062-0130	1	95B	6625-01-118-8222	1	91
5999-01-062-2144	1	94A	5905-01-132-1491	3	12
5999-01-062-2145	1	94B	5962-01-141-2594	3	40
5999-01-062-2146	1	91E	5910-01-142-3996	6	8
5999-01-062-2147	1	91C	5961-01-148-8412	5	21
5999-01-062-2148	1	91A	5961-01-148-8413	2	35
5365-01-062-3630	1	13		3	23
6625-01-062-4946	1	88		4	24
6625-01-062-4947	1	67		6	25
5340-01-062-6736	1	18	5905-01-149-5102	5	28
5340-01-063-2861	1	1		6	22
5340-01-063-2862	1	54	5905-01-149-5107	2	22
6625-01-063-4512	1	66		4	2
5340-01-063-8874	4	3		5	36
	5	65		6	41
5340-01-064-1897	1	57	5905-01-181-3197	4	6
5962-01-069-3883	3	34	5905-01-181-3203	6	29
5340-01-070-2240	1	12	5910-01-184-5240	4	5
5995-01-071-2975	5	68	5910-01-184-5311	4	21
5995-01-071-2976	6	59		6	6
6110-01-071-3366	1	71	5910-01-184-5312	5	2
5910-01-072-3838	1	73			
5910-01-072-3852	3	27			
5910-01-072-3853	3	20			
5950-01-072-3981	6	54			
5950-01-072-3982	6	55			
5961-01-072-4056	1	98			
5962-01-072-4087	5	52			
5910-01-072-8492	3	21			
5305-01-072-9124	1	41			
5340-01-072-9309	1	14			
5910-01-075-6781	3	14			
5962-01-077-5083	4	34			
3120-01-077-7200	1	15			
5920-01-079-6571	1	33			
5950-01-081-8833	4	30			
	5	8			
5962-01-082-9854	5	61			
5905-01-086-9265	3	24			
5935-01-090-3975	1	89			
5910-01-092-9377	4	14			
5910-01-095-6373	3	13			
	6	4			
5905-01-102-1495	6	35			
5962-01-103-5080	4	15			

NATIONAL STOCK NUMBER AND PART NUMBER INDEX

PART NUMBER INDEX

FSCM	PART NUMBER	STOCK NUMBER	FIG.	ITEM
52072	CA14-200DL	5935-01-090-3975	1	89
81349	CC20CJ3R0C	5910-01-142-3996	6	8
81349	CC22CJ3R3C	5910-00-950-2380	6	8
81349	CMR05C180JPDR	5910-01-043-6895	5	15
81349	CM05ED910J03		3	28
81349	CM10CD050D03	5910-00-118-7902	3	16
60705	C016F251F102KS22	5910-01-092-9377	4	14
60705	C023B501G103M	5910-00-788-0328	2	3
72136	DM15FA911G0	5910-00-054-0761	3	6
03508	D44H5	5961-01-021-5211	3	36
03508	D45H5	5961-01-020-6730	3	48
81349	FM04A125V 1/8A	5920-00-480-4063	1	9A
81349	F02A250V1/2A	5920-00-280-8344	3	41
81349	F02A250V1A	5920-00-280-8342	1	36
			1	103
81349	F02A250V2A	5920-00-280-4960	1	34
			1	104
			3	42
73957	GP24-063X250-12		5	69A
			6	7B
81349	JAN1N4467	5961-00-147-9600	3	35
81349	JAN1N5711	5961-00-232-3279	5	46
81349	JAN1N964B	5961-00-752-6115	2	72
81349	JAN2N3563	5961-00-943-7572	2	55
			5	54
81349	JAN2N3904		4	29
01295	LM111JG/883B	5962-01-069-3883	3	34
81349	LT10K060	5950-00-070-7644	4	33
81349	LT4K081	5950-00-734-3940	4	13
14933	L01466	5962-00-329-4591	2	74
14933	L01467	5962-00-329-4592	2	51
14933	L01468	5962-00-329-4613	2	67
14933	L01476	5962-00-329-4689	6	60
14933	L01497	5961-00-357-3023	3	46
16333	MPSU01	5961-00-756-6815	3	51
04713	MR820	5961-00-596-3284	3	50
96906	MS14046-5	5950-01-010-1194	6	18
96906	MS15795-806	5310-00-880-5976	1	77
96906	MS16535-154	5320-00-879-6606	1	31
			3	53
96906	MS16535-156	5320-00-826-0329	1	40
96906	MS24693C25	5305-00-969-6495	1	55
96906	MS24693C26	5305-00-958-2918	1	92
96906	MS27183-3	5310-00-951-4679	1	85
96906	MS35335-57	5310-00-058-3599	1	84
96906	MS35335-58	5310-00-209-1366	1	56
96906	MS35336-9	5310-00-550-0284	1	81
96906	MS35338-40	5310-00-543-2410	1	86
96906	MS35338-41	5310-00-045-4007	1	75
96906	MS35649-244	5310-00-934-9748	1	83
96906	MS51957-20	5305-00-054-5654	1	87

NATIONAL STOCK NUMBER AND PART NUMBER INDEX

PART NUMBER INDEX

FSCM	PART NUMBER	STOCK NUMBER	FIG.	ITEM
96906	MS51957-26	5305-00-054-6650	1	58
96906	MS51957-27	5305-00-054-6651	1	61
96906	MS51959-25	5305-00-763-6960	1	19A
96906	MS51959-28	5305-00-763-6963	1	76
96906	MS51959-41	5305-00-765-4244	1	69
96906	MS75085-19	5950-00-031-3779	6	2
96906	MS90539-15	5950-00-893-8650	5	11
81349	M38510/00103BCB		2	64
81349	M38510/00104BCB	5962-00-318-2223	2	56
81349	M38510/00108BCB	5962-00-372-0476	2	70
81349	M38510/00109BCB	5962-00-331-9837	2	44
81349	M38510/00401BCB	5962-00-369-7607	2	63
81349	M38510/00402BEB	5962-00-515-3254	2	62
81349	M38510/00701BCB	5962-00-361-8648	2	52
81349	M38510/00805BCB	5962-01-015-8537	5	57
81349	M38510/01001BEB	5962-00-428-7809	2	58
81349	M38510/01501BEB	5962-00-595-8504	2	53
			5	56
81349	M38510/01601BCB	5962-00-396-2587	2	75
81349	M38510/01602BCB	5962-00-430-2740	2	45
81349	M38510/06003BEB	5962-01-082-9854	5	61
81349	M38510/06302BEB	5962-01-103-5080	4	15
			5	55
81349	M38510/10103BPC	5962-01-141-2594	3	40
81349	M38510/10301BGB	5962-00-428-8070	2	47
81349	M38510/10305BEB		2	46
81349	M38510/15101BCB	5962-01-052-2957	2	65
81349	M38510/15103BCB	5962-01-048-9561	2	71
81349	M38510/16101BCB	5962-01-051-5005	2	61
81349	M38510/30904BEB	5962-01-059-0583	4	28
81349	M38510/31501BCB	5962-01-077-5083	4	34
81349	M39003/01-2962	5910-00-007-2000	5	12
81349	M39003/01-2988	5910-00-010-8159	2	1
81349	M39003/01-3003	5910-00-007-2002	2	2
			5	10
81349	M39003/01-3024	5910-00-144-4381	4	23
81349	M39003/01-3026	5910-00-144-4383	2	5
81349	M39003/01-3064	5910-00-187-0032	2	15
81349	M39003/01-3076	5910-00-495-0042	2	9
81349	M39012/21-0002	5935-00-853-7596	1	45
81349	M39014/01-1593	5910-00-010-8717	3	19
			4	4
			4	8
			5	3
			5	6
			6	3
81349	M39014/20-0109	5910-01-095-6373	3	13
			6	4
81349	M39014/23-0313	5910-01-184-5311	4	21
			6	6
81349	M39014/23-0319	5910-01-184-5240	4	5

NATIONAL STOCK NUMBER AND PART NUMBER INDEX

PART NUMBER INDEX

FSCM	PART NUMBER	STOCK NUMBER	FIG.	ITEM
81349	M39014/23-0334	5910-01-184-5312	5	2
85480	N632-3-8	5305-00-720-8847	1	82
			2	12
81349	RCR05G100JS	5905-00-255-3699	5	13
			6	30
81349	RCR05G103JS	5905-01-035-5065	6	43
81349	RCR05G270JS	5905-00-197-0221	5	16
81349	RCR05G271JS	5905-00-401-7425	5	45
81349	RCR05G300JS	5905-00-479-6619	5	19
81349	RCR05G472JS	5905-00-617-5091	6	44
81349	RCR05G510JS	5905-00-412-0758	5	14
81349	RCR05G560JS	5905-00-255-3701	5	18
81349	RCR07G100JS	5905-00-107-0656	4	22
			6	21
81349	RCR07G102JS	5905-00-110-7620	2	29
			3	8
			4	12
			5	24
			6	23
81349	RCR07G105JS	5905-00-116-8554	3	33
			5	44
			6	32
81349	RCR07G112JS	5905-00-119-8855	5	33
81349	RCR07G113JS	5905-00-369-6932	3	31
81349	RCR07G121JS	5905-00-119-8812	5	31
81349	RCR07G122JS	5905-00-131-1255	4	1
81349	RCR07G152JS	5905-00-106-1356	2	39
			5	71
81349	RCR07G154JS	5905-00-114-5339	2	28
81349	RCR07G181JS	5905-00-141-0742	5	20
81349	RCR07G200JS	5905-00-135-3972	5	23
			6	33
81349	RCR07G201JS	5905-00-111-4845	2	37
81349	RCR07G202JS	5905-00-114-0708	5	17
81349	RCR07G271JS	5905-00-119-3503	2	20
			3	5
			5	25
81349	RCR07G272JS	5905-00-111-4727	2	43
81349	RCR07G301JS	5905-00-111-4750	5	40
81349	RCR07G331JS	5905-00-114-0710	2	41
			5	41
			6	31
81349	RCR07G335JS	5905-00-126-6677	2	38
81349	RCR07G392JS	5905-00-141-0743	6	42
81349	RCR07G4R7JS	5905-00-246-9393	4	31
81349	RCR07G431JS	5905-00-135-3974	2	42
81349	RCR07G471JS	5905-00-120-9154	4	25
			5	32
81349	RCR07G472JS	5905-00-114-0711	2	31
			3	30
			6	40

NATIONAL STOCK NUMBER AND PART NUMBER INDEX

PART NUMBER INDEX

FSCM	PART NUMBER	STOCK NUMBER	FIG.	ITEM
81349	RCR07G474JS	5905-00-105-7767	5	26
81349	RCR07G511JS	5905-00-116-2394	2	21
			6	37
81349	RCR07G512JS	5905-00-111-1679	5	30
81349	RCR07G513J7	5905-00-136-3890	5	34
81349	RCR07G560JS	5905-00-133-0440	2	32
81349	RCR07G561JS	5905-00-105-7768	5	27
			6	28
81349	RCR07G563JS	5905-00-106-1357	2	33
81349	RCR07G681JS	5905-00-135-6046	2	30
			3	22
81349	RCR07G820JS	5905-00-104-8363	5	43
81349	RCR07G821JS	5905-00-119-8768	5	42
			6	20
81349	RCR07G824JS	5905-00-244-6934	3	29
72136	RDM15F301F3C	5910-00-078-1950	6	12
81349	RLR05C5620FS	5905-01-181-3203	6	29
81349	RLR32C221JM	5905-00-724-5636	3	11
81349	RL42S101GTX	5905-01-086-9265	3	24
81349	RNC50K5110FS	5905-00-506-6618	6	27
81349	RNC55K1212FS	5905-00-431-7825	2	26
81349	RNC55K1621FS	5905-00-432-6373	3	4
81349	RNC55K2001FS	5905-00-432-0401	2	24
			3	18
			6	38
81349	RNC55K2370FS	5905-00-430-1509	6	19
81349	RNC55K3011FS	5905-00-432-9152	2	27
			5	29
81349	RNC55K3161FS	5905-00-432-0415	2	25
81349	RNC55K3162FS	5905-00-412-0819	3	7
81349	RNC55K5112FS	5905-00-432-0423	5	39
81349	RNC55K5621FS	5905-00-432-6384	4	36
81349	RNC56J9002BS	5905-01-102-1495	6	35
81349	RNC60H1501FS	5905-00-405-8103	2	36
81349	RNC60H1502FS	5905-00-165-3153	2	34
81349	RNC60K1000FS	5905-00-426-7133	6	39
81349	RNC60K1001FS	5905-00-432-6410	3	17
			5	38
81349	RNC60K3322FS	5905-00-721-2385	3	10
81349	RNC60K6811FS	5905-00-451-7533	4	27
81349	RNC60K9093FS	5905-00-284-8220	6	36
81349	RNC65K1370FS		6	34
81349	RNC70K56R2FS	5905-00-549-1437	5	35
81349	RWR74S2490FS	5905-01-181-3197	4	6
81349	RWR89SR475FS	5905-01-132-1491	3	12
81349	RWR89SR475FS	5905-00-763-8769	3	1
04713	SPS5103	5961-00-137-4608	2	48
			5	58
			6	47
02114	VK20020/4B	5950-01-081-8833	4	30
			5	8

NATIONAL STOCK NUMBER AND PART NUMBER INDEX

PART NUMBER INDEX

FSCM	PART NUMBER	STOCK NUMBER	FIG.	ITEM
28480	0140-0177	5910-00-917-9737	2	14
28480	0140-0221	5910-00-772-6728	4	10
28480	0160-0676	5910-01-072-3838	1	73
28480	0160-2242	5910-00-957-2765	6	8
28480	0160-2246	5910-00-430-5697	6	8
28480	0160-3878	5910-00-348-2617	5	4
28480	0160-4423	5910-01-057-8160	6	5
28480	0180-0587	5910-01-072-3853	3	20
28480	0180-2827	5910-01-072-8492	3	21
28480	0180-2842	5910-01-075-6781	3	14
28480	0182-2832	5910-01-072-3852	3	27
28480	0340-0765	5970-01-013-2132	1	80
28480	0360-0124	5940-00-993-9338	2	8
			5	64
28480	0370-1005	5355-00-100-6778	1	21
28480	0370-1097	5355-01-061-7482	1	11
28480	0370-1107	5355-01-011-4975	1	24
28480	0380-0004	5365-01-062-3630	1	13
28480	0380-0643		1	47
28480	0490-0642	5945-01-058-1568	6	50
28480	0490-1175	5950-01-072-3981	6	54
28480	0490-1183	5950-01-072-3982	6	55
28480	05303-80001	5950-01-042-1960	5	5
28480	05305-20104	5920-01-057-8171	1	9
28480	05305-20105	5970-01-057-6010	1	8
28480	05305-60205	5935-01-058-1289	1	10
28480	05305-60206	5935-01-058-0804	1	5
28480	05328-00001		1	65
28480	05328-00002		1	60
28480	05328-00003		1	94
28480	05328-00010		3	52
28480	05328-00011		1	93
28480	05328-00014		1	44
28480	05328-00015		1	49
28480	05328-00017		1	50
28480	05328-00019		1	72
28480	05328-00020	5340-01-072-9309	1	14
28480	05328-00021		1	43
28480	05328-00022		1	48
28480	05328-20001		2	4
28480	05328-20003		3	39
28480	05328-20016		5	67
28480	05328-20027		4	18
28480	05328-20031		6	58
28480	05328-20212		1	20
28480	05328-20217		1	2
28480	05328-20253	5305-01-061-9679	1	16
28480	05328-60005	5999-01-062-2145	1	94B
28480	05328-60020	6625-01-062-0127	1	91D
28480	05328-60023	5999-01-062-2147	1	91C
28480	05328-60026	5999-01-062-0130	1	95B

NATIONAL STOCK NUMBER AND PART NUMBER INDEX

PART NUMBER INDEX

FSCM	PART NUMBER	STOCK NUMBER	FIG.	ITEM
28480	05328-60028	5999-01-062-2144	1	94A
28480	05328-60030	5999-01-062-2148	1	91A
28480	05328-60032	5999-01-062-2146	1	91E
28480	05328-60035	5999-01-062-0125	1	73A
28480	05328-60038	5999-01-062-0126	1	95A
28480	05328-60042	6625-01-062-0128	1	91B
28480	05328-60043	5999-01-062-0129	1	70A
28480	05328-60111	5995-01-071-2976	6	59
28480	05328-60115	6625-01-063-4512	1	66
28480	05328-60116	5995-01-071-2975	5	68
28480	05328-60121		1	97
28480	05328-80002		4	37
28480	0570-1171	5305-01-072-9124	1	41
26916	058-001691	5962-01-039-9414	5	63
28480	0590-0038	5310-00-469-4042	1	6
28480	0811-3050	5905-01-057-8089	3	2
27264	09-52-3030	5935-00-238-5507	3	37
00779	1-331677-3	5999-00-511-4046	5	66
80131	1N3956	5961-00-762-3115	2	54
			3	43
			4	16
			6	53
80131	1N5340B	5961-00-483-4590	3	47
80131	1N5354B	5961-00-148-2479	3	45
16845	1000-409-15	5961-01-148-8412	5	21
16845	1000-409-16	5961-01-148-8413	2	35
			3	23
			4	24
			6	25
16845	1000-412-12	5905-01-149-5102	5	28
			6	22
16845	1000-483-23	5905-01-149-5107	2	22
			4	2
			5	36
			6	41
18876	10395420-002	5910-00-056-4557	2	18
53655	11-341LN	5310-00-269-6498	1	17
82389	11A1242A	5930-00-406-8746	1	32
28480	1200-0525	5935-01-058-1258	2	68
28480	1200-0548	5935-01-058-0776	6	48
28480	1200-0549	5935-01-058-1256	2	6
28480	1251-2026	5935-00-446-8768	2	7
28480	1390-0406	5340-01-063-2861	1	1
50434	1400-0560	5365-01-039-4427	1	3
28480	1450-0569	5961-01-072-4056	1	98
28480	1460-1345	5340-01-062-6736	1	18
56289	150D156X9020B2		4	32
57057	1589900009		1	29
16428	17252	5935-00-233-6728	1	39
16428	17743	6150-01-111-1717	1	96
28480	1810-0041	5905-00-470-7377	2	40

NATIONAL STOCK NUMBER AND PART NUMBER INDEX

PART NUMBER INDEX

FSCM	PART NUMBER	STOCK NUMBER	FIG.	ITEM
28480	1810-0055	5905-00-548-0915	2	23
28480	1810-0080	5905-01-057-8115	5	37
			6	45
28480	1818-2251	5962-01-058-1536	1	95
28480	1820-0055	5962-00-493-5961	2	49
28480	1820-0805	5962-01-058-1541	6	61
28480	1820-1019	5962-01-022-3250	5	62
28480	1820-1143	5962-01-058-1540	2	73
28480	1820-1401	5962-01-058-1041	2	67
28480	1820-2112	5962-01-072-4087	5	52
50440	1820-2642	5962-00-513-2691	5	53
28480	1826-0084	5962-00-506-7641	5	48
28480	1826-0085	5962-00-506-6810	5	50
			5	51
28480	1826-0419	5962-01-058-1535	5	60
28480	1826-0426	5962-01-058-4411	6	57
28480	1853-0326	5961-00-471-2984	3	49
28480	1901-0050	5961-00-914-7496	2	66
			5	49
28480	1901-0376	5961-00-790-7834	6	49
28480	1901-0638	5961-00-007-4120	3	38
28480	1902-0126	5961-00-780-8330	5	59
28480	1902-0579	5961-00-452-0438	4	7
28480	1902-3048	5961-00-147-0107	6	52
28480	1902-3082	5961-00-448-9737	2	59
			6	46
28480	1910-0016	5961-00-954-9182	2	57
78189	1920-02		1	46
00866	1921B	5340-01-063-8874	4	3
			5	65
78189	1924-02	5310-00-596-7681	1	7
56289	196D105X9050HA1	5910-00-428-2671	3	15
56289	196D106X9025KA1	5910-00-205-9119	6	16
56289	196D336X9010KA1	5910-00-007-0803	3	3
56289	196D686X9006KA1	5910-00-581-7132	5	7
			5	9
			6	7
28480	1990-0404	5961-01-058-7907	1	99
28480	1990-0437	5961-01-022-8408	1	101
28480	1990-0485	5961-01-049-6785	1	100
81349	2N3638A	5961-00-912-9008	3	44
80131	2N3906	5961-00-931-0372	4	20
80131	2N5912	5961-00-565-8435	6	51
94990	20-34307A13	5910-00-246-8723	4	11
28480	2100-2522	5905-00-476-5797	5	73
28480	2110-0464	5920-01-058-1251	1	38
83330	2162-6		1	62
28480	2420-0020		1	79
71785	252-15-30-300	5935-00-405-7720	2	13
			4	35
75915	275-125	5920-00-879-8408	1	35

NATIONAL STOCK NUMBER AND PART NUMBER INDEX

PART NUMBER INDEX

FSCM	PART NUMBER	STOCK NUMBER	FIG.	ITEM
75915	275-125	5920-00-879-8408	1	105
94117	280044P11	5935-00-481-4141	2	50
74306	2810007	5955-00-571-9496	1	106
56289	292P10292	5910-01-030-1101	2	10
56289	292P10352	5910-00-375-0840	2	17
56289	292P22352	5910-00-506-7014	2	16
28480	2950-0154		1	25
80294	3006P1-103	5905-00-243-1778	4	9
28480	3050-0245		1	63
28480	3050-0273	5365-00-419-1039	1	23
28480	3101-0851	5930-01-057-7021	1	28
28480	3101-1977		2	19
28480	3130-0498	5930-01-057-6811	1	27
28480	3130-0500	5930-01-057-6812	1	26
32997	3329WT22-102	5905-01-028-1641	5	22
			6	24
80294	3329W1-101	5905-00-172-2988	6	26
75915	345001-020	5920-01-079-6571	1	33
89536	376418	5999-01-118-5835	5	72
			6	56
28480	4040-1214		1	30
82389	410C507	5310-00-460-3056	1	22
00779	42718-3	5940-00-065-5029	1	68
			1	102
			5	70
98291	50-051-0000	5935-00-068-3546	4	19
28480	5020-8801		1	90
28480	5020-8802		1	70
28480	5020-8831		1	59
20932	5024E0200RD200J	5910-01-056-2163	4	17
28480	5040-4529	5999-00-230-8833	5	69
28480	5040-5112	5999-00-230-8834	6	7A
28480	5040-7201	5340-01-063-2862	1	54
28480	5040-7202	6625-01-118-8222	1	91
28480	5040-7216	3120-01-077-7200	1	15
28480	5040-7221	5340-01-064-1897	1	57
28480	5040-7224	5340-01-070-2240	1	12
28480	5082-5511	5961-00-451-8685	5	47
28480	50824655	5961-01-025-4606	1	4
79136	5133-14SMDR		1	42
96214	531917-4	5962-00-476-8339	2	60
09410	69.11.2	6110-01-071-3366	1	71
28480	7101-0470	6625-01-061-8904	1	64
28480	7120-0644		1	74
28480	7120-6470		1	52
28480	7120-7018		1	53
28480	7122-0097		1	51
07263	723PC	5962-00-417-1080	3	32
			4	26
18796	8101A100C0G0479C	5910-00-161-4431	6	13
18796	8111A200C0G0100J	5910-00-462-4093	6	17

NATIONAL STOCK NUMBER AND PART NUMBER INDEX

PART NUMBER INDEX

FSCM	PART NUMBER	STOCK NUMBER	FIG.	ITEM
28480	8120-0520	6625-01-062-4946	1	88
28480	8120-2176	6625-01-062-4947	1	67
72982	8121M112X7R0103M	5910-00-477-8011	3	9
			5	1
			6	1
72982	8131-500WR5R0473K	5910-01-013-5022	6	11
06540	8156N0632	5310-00-443-5580	2	11
75915	903-070	5310-01-112-1496	1	37
28480	9100-3017	5950-01-058-9732	3	26
28480	9100-3046	5950-01-058-9735	1	78
28480	9100-3139	5950-00-470-0660	3	25
73743	93145-03	5310-00-878-2193	1	19

By Order of the Secretary of the Army:

JOHN A. WICKHAM JR.
General, United States Army
Chief of Staff

Official:

MILDRED E. HEDBERG
Brigadier General, United States Army
The Adjutant General

DISTRIBUTION:
To be distributed in accordance with DA Form 12-36 literature requirements for AN/USM-459.

*U.S. GOVERNMENT PRINTING OFFICE : 1992 0 - 311-831 (45139)

These are the instructions for sending an electronic 2028

The following format must be used if submitting an electronic 2028. The subject line must be exactly the same and all fields must be included; however only the following fields are mandatory: 1, 3, 4, 5, 6, 7, 8, 9, 10, 13, 15, 16, 17, and 27.

From: “Whomever” <whomever@wherever.army.mil>
To: 2028@redstone.army.mil

Subject: DA Form 2028

1. ***From:*** Joe Smith
2. *Unit:* home
3. ***Address:*** 4300 Park
4. ***City:*** Hometown
5. ***St:*** MO
6. ***Zip:*** 77777
7. ***Date Sent:*** 19−OCT−93
8. ***Pub no:*** 55−2840−229−23
9. ***Pub Title:*** TM
10. ***Publication Date:*** 04−JUL−85
11. *Change Number:* 7
12. *Submitter Rank:* MSG
13. ***Submitter FName:*** Joe
14. *Submitter MName:* T
15. ***Submitter LName:*** Smith
16. ***Submitter Phone:*** 123−123−1234
17. ***Problem:*** **1**
18. *Page:* 2
19. *Paragraph:* 3
20. *Line:* 4
21. *NSN:* 5
22. *Reference:* 6
23. *Figure:* 7
24. *Table:* 8
25. *Item:* 9
26. *Total:* 123
27. ***Text:***

This is the text for the problem below line 27.

RECOMMENDED CHANGES TO PUBLICATIONS AND BLANK FORMS For use of this form, see AR 25–30; the proponent agency is ODISC4.	Use Part II (*reverse)* for Repair Parts and Special Tool Lists (RPSTL) and Supply Catalogs/ Supply Manuals (SC/SM)	DATE 8/30/02

TO: (*Forward to proponent of publication or form)(Include ZIP Code)*	FROM: (*Activity and location)(Include ZIP Code)*
Commander, U.S. Army Aviation and Missile Command ATTN: AMSAM–MMC–MA–NP Redstone Arsenal, 35898	MSG, Jane Q. Doe 1234 Any Street Nowhere Town, AL 34565

PART 1 – ALL PUBLICATIONS (EXCEPT RPSTL AND SC/SM) AND BLANK FORMS

PUBLICATION/FORM NUMBER	DATE	TITLE
TM 9–1005–433–24	16 Sep 2002	Organizational, Direct Support, And General Support Maintenance Manual for Machine Gun, .50 Caliber M3P and M3P Machine Gun Electrical Test Set Used On Avenger Air Defense Weapon System

ITEM NO.	PAGE NO.	PARA–GRAPH	LINE NO. *	FIGURE NO.	TABLE NO.	RECOMMENDED CHANGES AND REASON
1	WP0005 PG 3		2			Test or Corrective Action column should identify a different WP number.

** Reference to line numbers within the paragraph or subparagraph.*

TYPED NAME, GRADE OR TITLE	TELEPHONE EXCHANGE/ AUTOVON, PLUS EXTENSION	SIGNATURE
MSG, Jane Q. Doe, SFC	788–1234	

EXAMPLE

TO: (*Forward direct to addressee listed in publication*)	**FROM:** (*Activity and location*) (*Include ZIP Code*)	**DATE**
Commander, U.S. Army Aviation and Missile Command ATTN: AMSAM–MMC–MA–NP Redstone Arsenal, 35898	MSG, Jane Q. Doe 1234 Any Street Nowhere Town, AL 34565	8/30/02

PART II – REPAIR PARTS AND SPECIAL TOOL LISTS AND SUPPLY CATALOGS/SUPPLY MANUALS

PUBLICATION NUMBER	DATE	TITLE

PAGE NO.	COLM NO.	LINE NO.	NATIONAL STOCK NUMBER	REFERENCE NO.	FIGURE NO.	ITEM NO.	TOTAL NO. OF MAJOR ITEMS SUPPORTED	RECOMMENDED ACTION

PART III – REMARKS (*Any general remarks or recommendations, or suggestions for improvement of publications and blank forms. Additional blank sheets may be used if more space is needed.*)

TYPED NAME, GRADE OR TITLE	TELEPHONE EXCHANGE/AUTOVON, PLUS EXTENSION	SIGNATURE
MSG, Jane Q. Doe, SFC	788–1234	

EXAMPLE

RECOMMENDED CHANGES TO PUBLICATIONS AND BLANK FORMS For use of this form, see AR 25–30; the proponent agency is ODISC4.	Use Part II (*reverse)* for Repair Parts and Special Tool Lists (RPSTL) and Supply Catalogs/ Supply Manuals (SC/SM)	DATE
TO: (*Forward to proponent of publication or form)(Include ZIP Code)*	FROM: (*Activity and location)(Include ZIP Code)*	

PART 1 – ALL PUBLICATIONS (EXCEPT RPSTL AND SC/SM) AND BLANK FORMS

PUBLICATION/FORM NUMBER	DATE	TITLE

ITEM NO.	PAGE NO.	PARA–GRAPH	LINE NO. *	FIGURE NO.	TABLE NO.	RECOMMENDED CHANGES AND REASON

** Reference to line numbers within the paragraph or subparagraph.*

TYPED NAME, GRADE OR TITLE	TELEPHONE EXCHANGE/ AUTOVON, PLUS EXTENSION	SIGNATURE

TO: (*Forward direct to addressee listed in publication)*	**FROM:** (*Activity and location) (Include ZIP Code)*	**DATE**

PART II – REPAIR PARTS AND SPECIAL TOOL LISTS AND SUPPLY CATALOGS/SUPPLY MANUALS

PUBLICATION NUMBER	DATE	TITLE

PAGE NO.	COLM NO.	LINE NO.	NATIONAL STOCK NUMBER	REFERENCE NO.	FIGURE NO.	ITEM NO.	TOTAL NO. OF MAJOR ITEMS SUPPORTED	RECOMMENDED ACTION

PART III – REMARKS (*Any general remarks or recommendations, or suggestions for improvement of publications and blank forms. Additional blank sheets may be used if more space is needed.)*

TYPED NAME, GRADE OR TITLE	TELEPHONE EXCHANGE/AUTOVON, PLUS EXTENSION	SIGNATURE